Personal and Product Safety

This product safety information includes American directives, which you must follow. If these do not apply in your country, please follow similar directives that do apply in your country.

Proposition 65 Warning (US Only)

State of California Proposition 65 Warning (US only)

WARNING: This product contains chemicals known to the State of California to cause cancer and birth defects or other reproductive harm.

Electrical

The product is designed to operate from a 120 V AC supply.

The product contains hazardous energy levels as defined by UL 60950. Care must be taken when maintaining this equipment as injury to personnel or damage to the equipment could result from mistakes. Maintenance should only be carried out by trained and competent engineers who are familiar with the relevant procedures and instructions.

Manual Handling

Care should be taken when handling equipment. Give due consideration to the weight of the equipment, the physical capability of the individual(s) handling the equipment, and movements such as twisting, bending and stooping, which could lead to skeletal and muscular injuries.

Installation

Installation must be carried out by trained and competent engineers only. All relevant safety measures should be taken to ensure equipment is not connected to live power and transmission sources during installation. Equipment must be correctly installed in order to meet the relevant safety standards and approval conditions.

Maintenance

Maintenance must only be carried out by a suitably trained and competent technician. All safety instructions must be carefully observed at all times. Equipment covers should not be removed while live power and transmission is connected unless in a controlled environment by trained technicians.

Fire

The product is powered from a 120 V AC supply. To protect against fire, the equipment is fused.

Copyright © 2020, All Rights Reserved.

Figure 17. Fixing Mounting Bracket on the Wall (1)

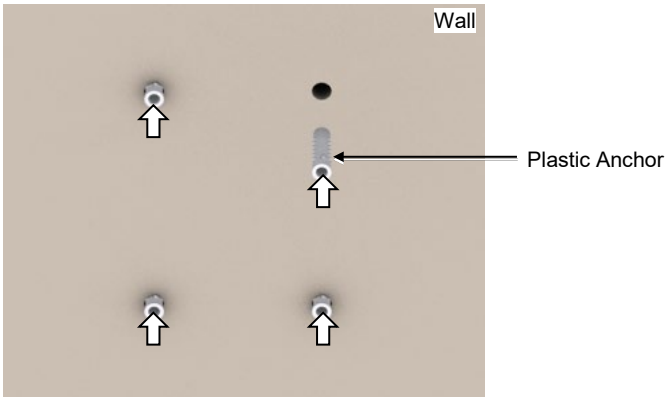

3 Place the mounting bracket along with the fixed plastic anchors.

Figure 18. Fixing Mounting Bracket on the Wall (2)

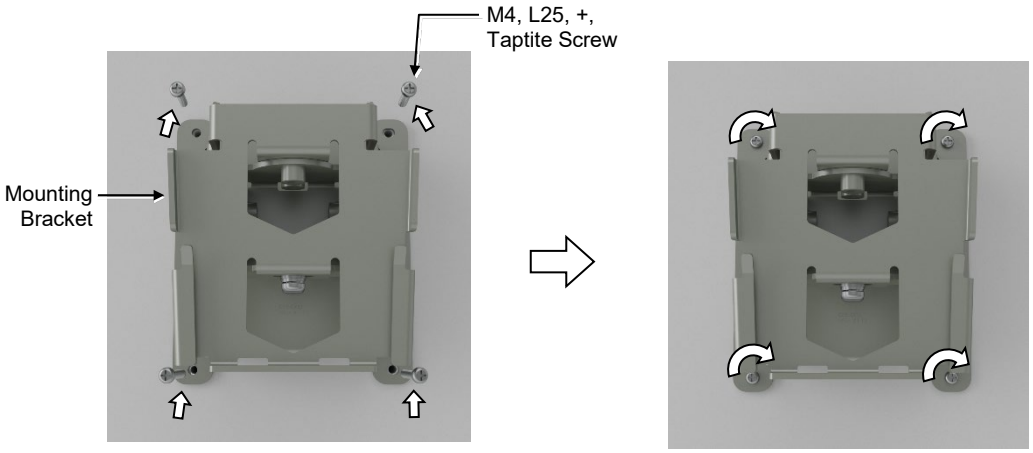

When fixing the mounting bracket, be sure to fix it in the correct orientation. The imprinted angle mark must be on the top.

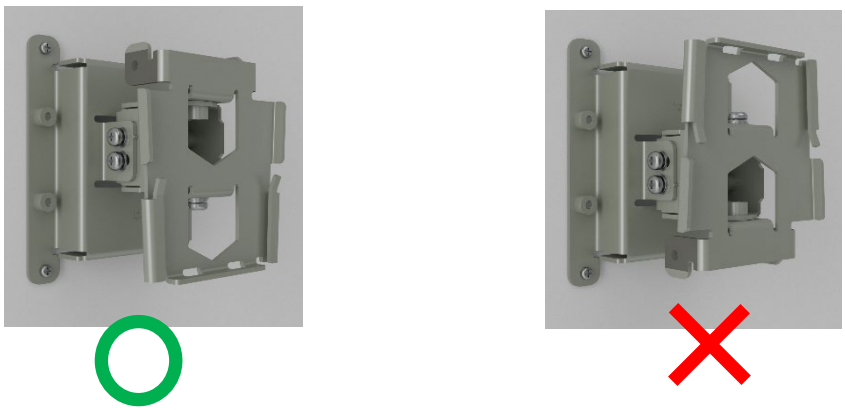

Copyright © 2020, All Rights Reserved.

Table 12. Recommended Minimum Allowed Cable Bending Radius

No	Cable	Allowed Cable Bending Radius
1	Ground/Power Cable	• Operation: 8 × OD • Installation: 12 × OD
2	Ethernet Cable	4 × OD

※ If the allowed cable bending radius is specified by the manufacturer, comply with the bend radius specified.

Cable Binding

This process involves fixing and arranging an installed cable using binding thread, cable ties, binding wire, and ram clamps.

Follow these guidelines when binding a cable.

- Be careful not to damage the cable during binding.
- Use proper cable binding tools according to the target location (indoor or outdoor) and the type of the cable (power supply cable, optical cable, or feeder line).
- Ensure the cutting sections of the cable tie and the binding line are not exposed to the outside. This may cause damage to the cables or personal injury.
- Cut off the remainder of the cable thread by leaving about 50 mm of extra length to prevent the knot from easily getting untied.
- If there is a chance of contact-failure to occur in the connector connection due to tension, bind the cable at the closest location to the connector.

Connector Attachment

This process involves assembling a connector to an installed cable or to a device on the site.

Follow these guidelines when attaching the connector.

- Ensure operator is fully aware of the connector assembly method before assembling the connector. Assemble the connector in accordance with its pin map.
- Each connector has a hook to prevent its core positions from being changed.
- Check the corresponding grooves before connecting the connector to another connector.
- Use a heat shrink tube at the connector connection for cables that are installed outdoor, such as feeder lines, to prevent water leakage and corrosion from occurring at the part exposed to the outside.
- Connect each cable of the connector assembly in a straight line.
- Be careful when connecting the cable so that contact failure does not occur at the connector connection due to tension.

Copyright © 2020, All Rights Reserved

Power Cabling

Figure below depicts the elements of a power supply device.

Figure 31. Power Equipment Elements

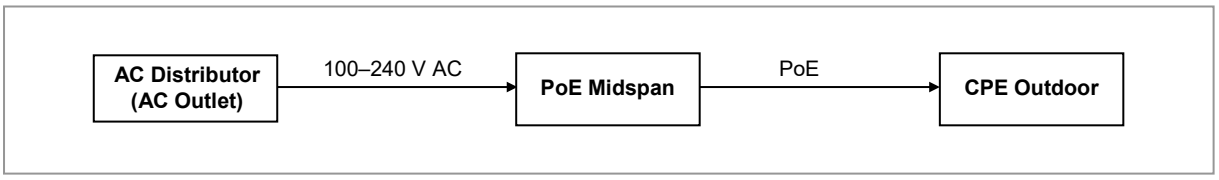

Handling the power cable incorrectly may damage the rack or cause an electric short-circuit through the cable. Ensure the power switch of the rectifier or the system is turned off before handling the power.

The fasteners for power cable must be tightly secured to prevent electrical accidents.

The heat-resistant temperature of the power cable should be 90 °C or more.

Install the power cable to the power port of the system by considering the radius of curvature of its cable specification and then cut the cable. If operator installs the cable after cutting, there may be length difference among the core wires at the end of the cable because of cable curvature. This may result in poor contact after the cable is connected to the power port.

If you turn the power on and off rapidly (within 1 s), the counter electromotive force caused by cable inductance can damage the system.

Connecting more than one power cable together may increase power loss.

It must be verified that the rectifier or the power distributor has an output voltage within the specified system input range before the power line is connected.

Connecting AC Power Cable

To connect an AC power cable to the PoE Midspan

1 Ensure that the items mentioned in below table are available.

Table 15. Parts and Tools for Connecting AC Power Cable to the PoE Midspan

Category	Description
Installation Section	AC Outlet-PoE Midspan AC IN port
Cable	AC Power Cable Assembly
Bending Radius	8 × OD

Copyright © 2020, All Rights Reserved

Figure 42. Connecting Ethernet Cable to the PoE Midspan (3)

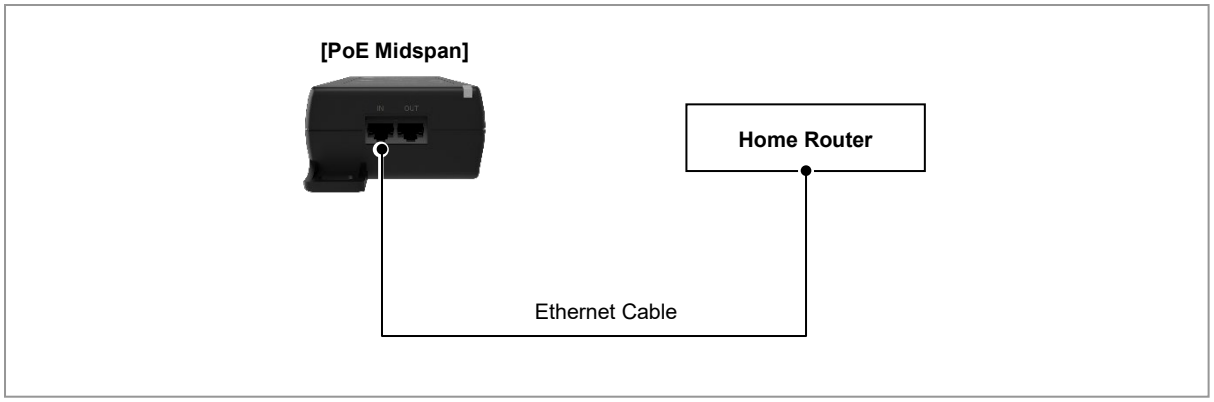

5 Connect the RJ-45 latch of Ethernet cable to PoE Midspan IN port.

Figure 43. Connecting Ethernet Cable to the PoE Midspan (4)

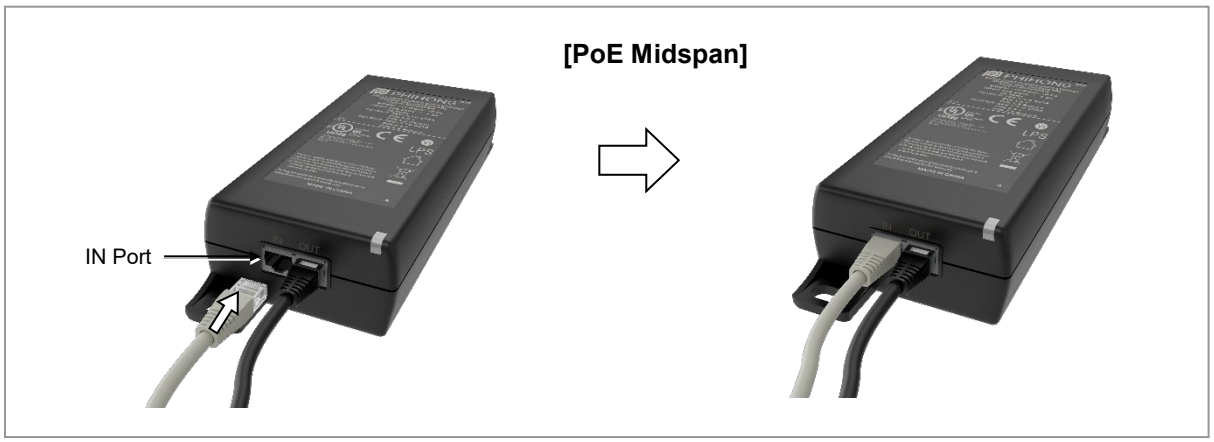

To check a LED

1 After turning the power on CPE Outdoor, check the status of LED.

Table 20. LED Indication

Process	Status	LED	Cycle	Detail
Boot up	No power			No LED indication
	Power on			Solid Cyan, until system bootup
	System booting / initializing / activating			Cyan blinking (600 ms ON, 600 ms OFF) till device is ready
5G signal test (installation mode)	Pairing BT (Shows for 60 seconds or until the device is paired before 60 seconds)			Cyan to OFF to Green to OFF (switch every 200 ms)
	Adequate signal (strong)			Sold Green
	Adequate signal (weak)			Solid Yellow
	No signal			Solid Red

Copyright © 2020, All Rights Reserved

Category	Check Items	Criteria	Result	
			Pass	Fail
	Cabling	Cable damage		
		Proper installation route		
		Compliance with the radius of curvature		
	Cable binding status	Binding status		
		Binding interval		
		Checking binding materials		
	Cable connection	Assembly condition of a pressure terminal		
		Fastening condition of a pressure terminal		
		Checking compliance with fastening torque value		
Power	Cable specification	Checking the specification		
		Checking the limit distance		
	Cabling	Cable damage		
		Proper installation route		
		Compliance with the radius of curvature		
	Cable binding status	Binding status		
		Binding interval		
		Checking binding materials		
	Cable connection	Checking cable connection		
Other data cables	Cable specification	Checking the specification		
	Cabling	Cable damage		
		Proper installation route		
		Compliance with the radius of curvature		
	Cable binding status	Binding status		
		Binding interval		
		Checking binding materials		
	Cable connection	Checking cable connection (Pin Map)		
		Assembly condition of a connector		
		Fastening condition of a connector		
Opinion				

Copyright © 2020, All Rights Reserved