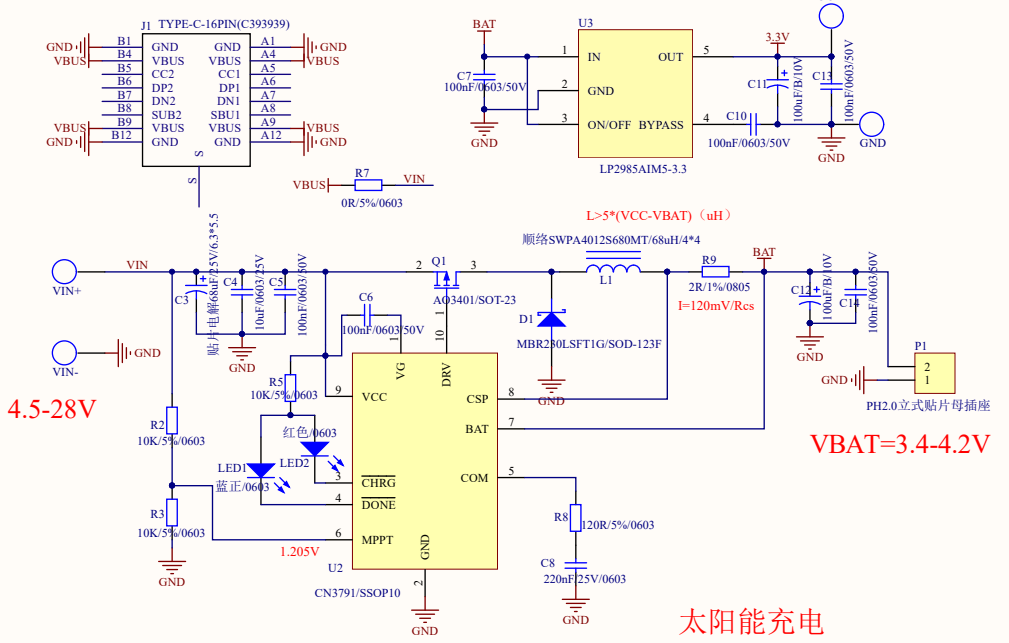

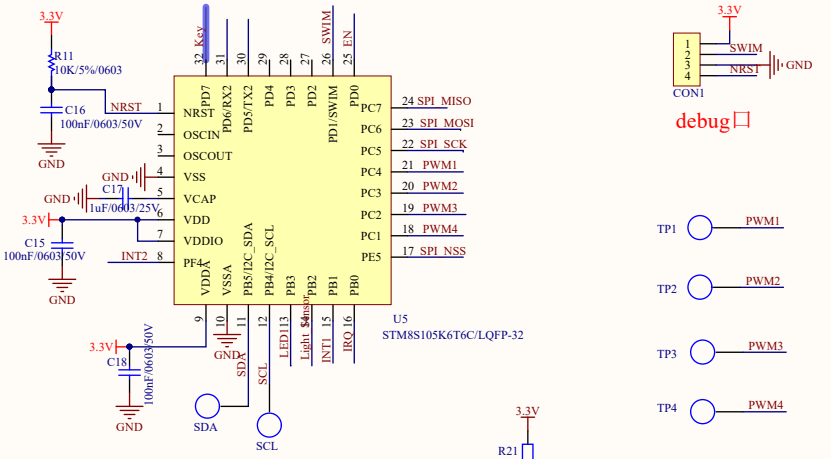

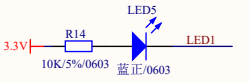

Light Indicator

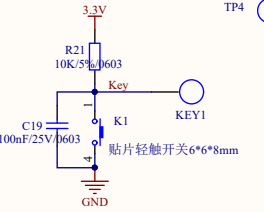

Set Key

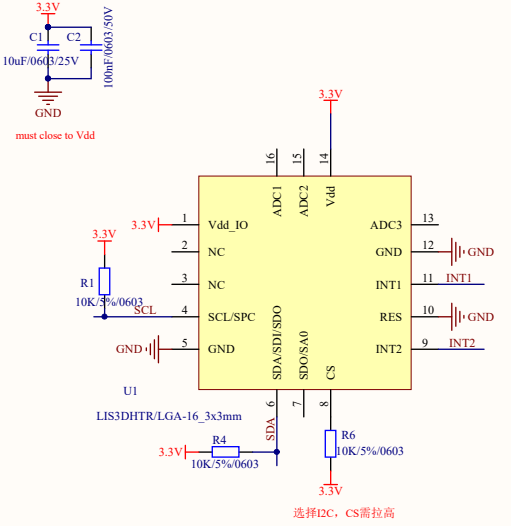

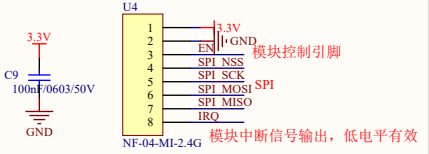

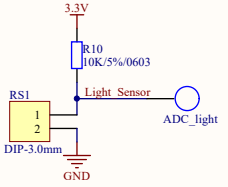

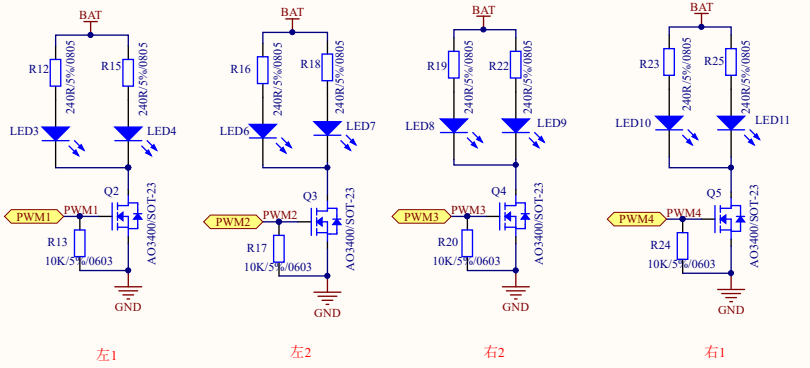

左转时，依次闪烁：右1->右2->左2->左1

尾灯LED

Title		
Size A3	Number	Revision
Date: 2019/7/26		Sheet of
File: C:\个人\..\Bike Light V0.1.SchDoc		Drawn By: