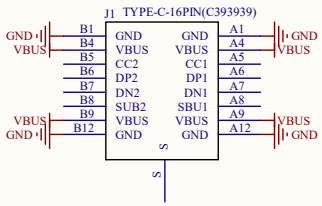

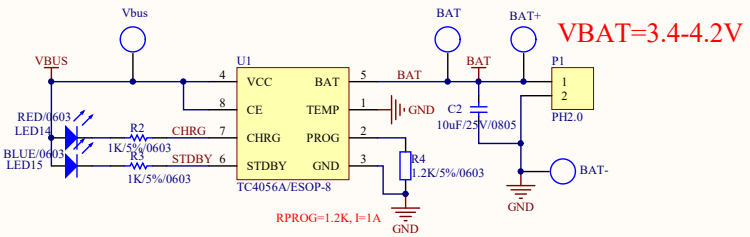

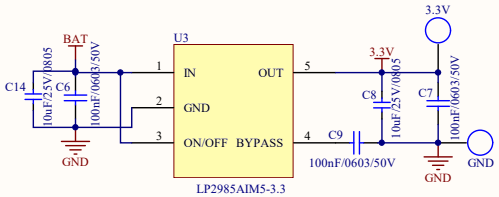

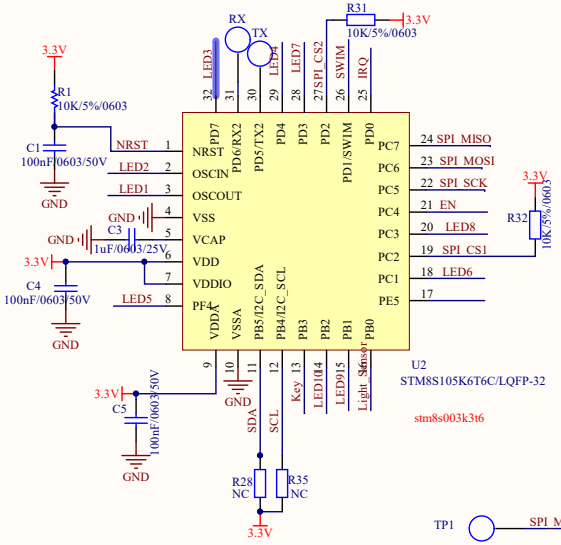

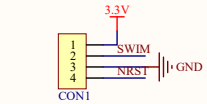

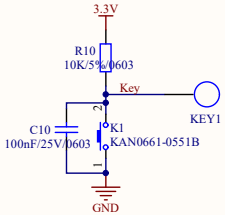

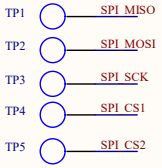

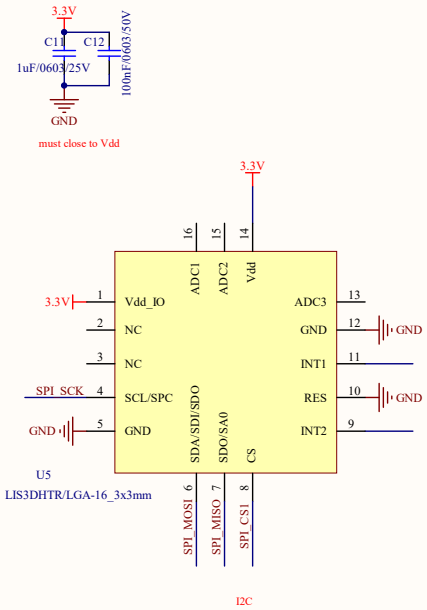

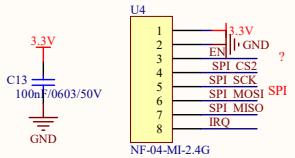

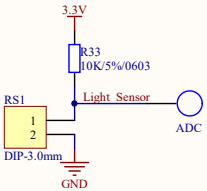

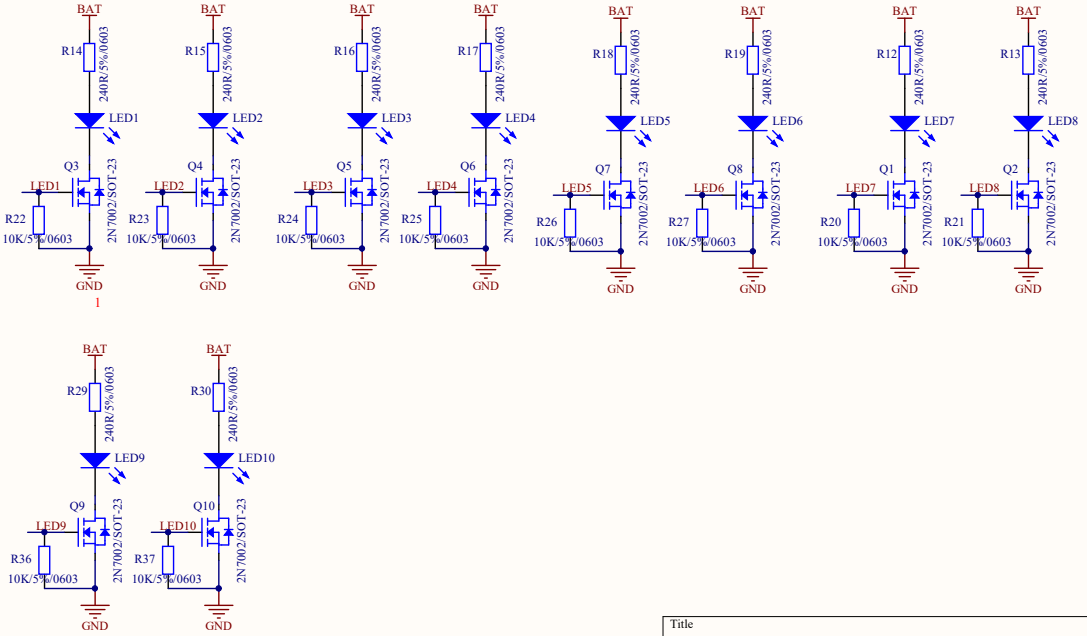

Title		
Size A3	Number	Revision
Date: 2019/11/3		Sheet of
File: F:\Project\..\Bike Light V0.2.SchDoc		Drawn By: