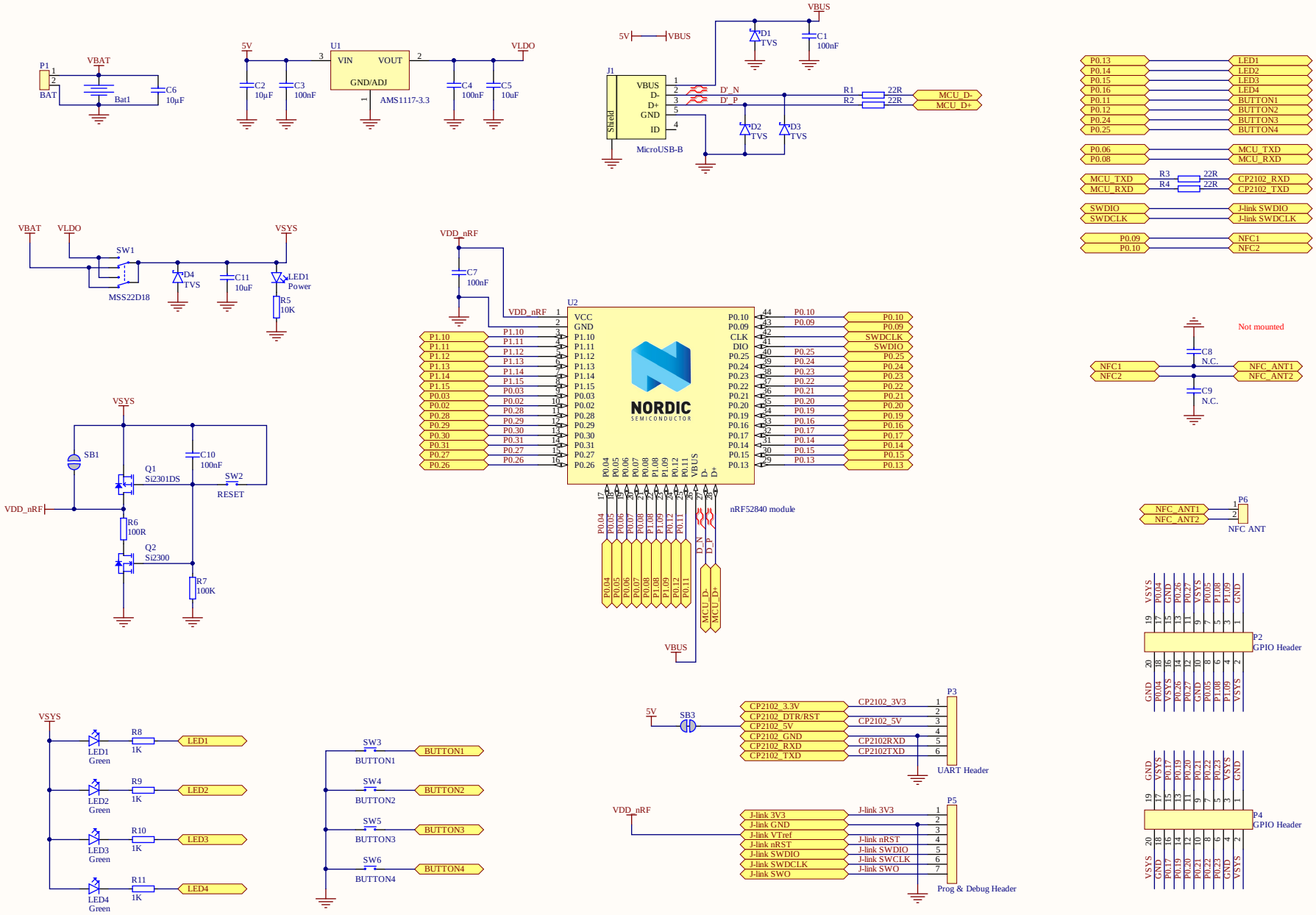

Title	*nRF52840 Nano Development Kit*	
Size: A3	Revision: 2.0.0	Sheet 1 of 1
Date: 4/17/2021	Time: 9:44:52 AM	Public