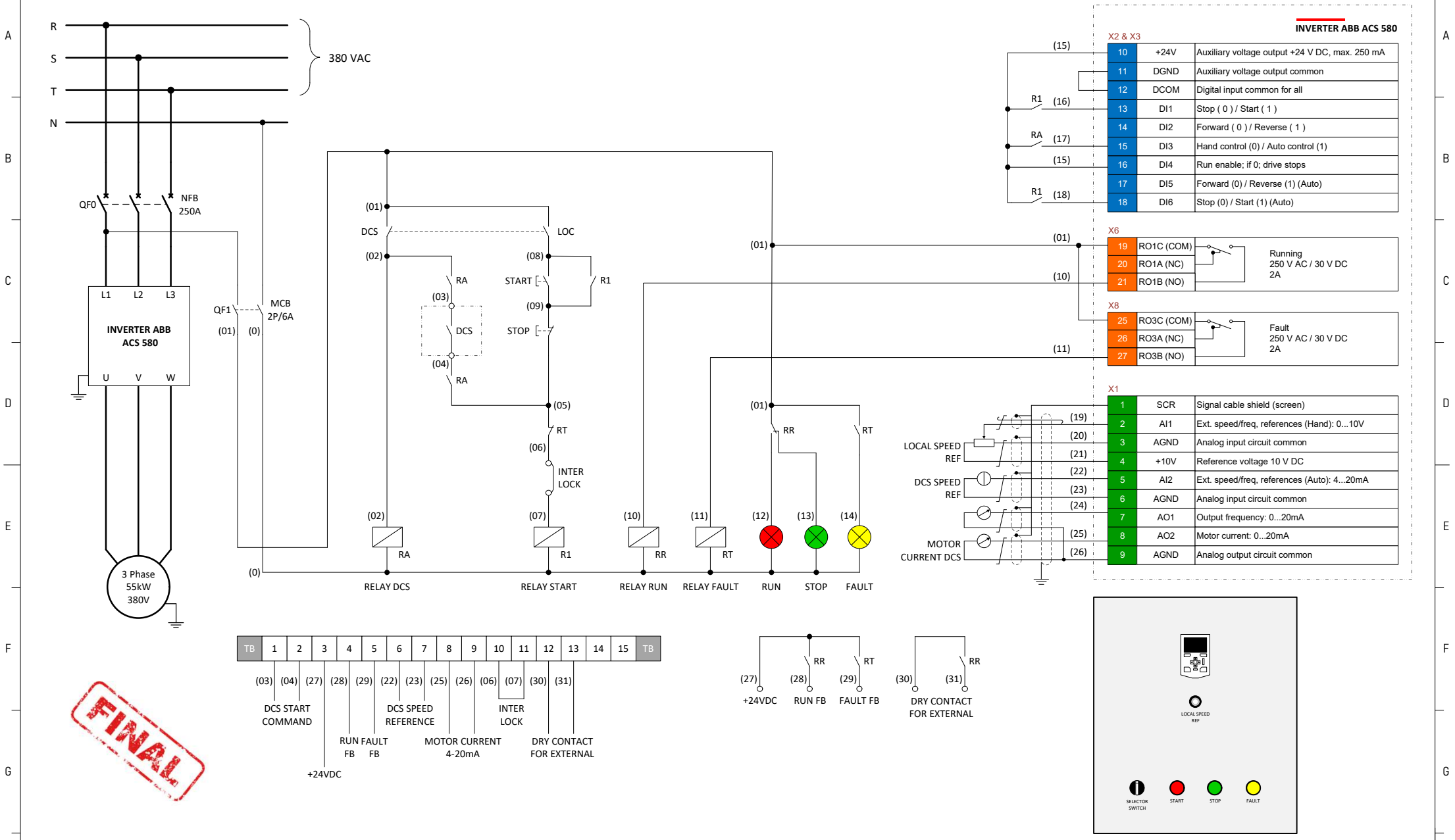

MACRO = HAND/AUTO

REVISION									
1	DRAWN: DONI D	CHECKED: NOPRIADI	PT. FAJAR SURYA WISESA .TBK	SCALE	NTS	SHEET	- OF -	REV	0
2	DEPT. ELECTRIC	APPROVED	WIRING DIAGRAM MODULE TF-3 PM7 INVERTER ACS 580	DWG. NO.	FSW-2023-PM7-MCC-15				
3	DATE: 01/09/23		https://www.fajarpaper.com						