Purdue Digital Signal Processing Labs (ECE 438)

By:
Charles A. Bouman

Online:
< http://cnx.org/content/col10593/1.4/ >

C O N N E X I O N S

Rice University, Houston, Texas

FREQUENCY ANAYSIS

This selection and arrangement of content as a collection is copyrighted by Charles A. Bouman. It is licensed under the Creative Commons Attribution 2.0 license (http://creativecommons.org/licenses/by/2.0/).
Collection structure revised: September 14, 2009
PDF generated: October 26, 2012
For copyright and attribution information for the modules contained in this collection, see p. 164.

4.1 Introduction

In this experiment,we will use Fourier series and Fourier transforms to analyze continuous-time and discrete-time signals and systems. The Fourier representations of signals involve the decomposition of the signal in terms of complex exponential functions. These decompositions are very important in the analysis of linear time-invariant (LTI) systems, due to the property that the response of an LTI system to a complex exponential input is a complex exponential of the same frequency! Only the amplitude and phase of the input signal are changed. Therefore, studying the frequency response of an LTI system gives complete insight into its behavior.

In this experiment and others to follow, we will use the Simulink extension to Matlab. Simulink is an icon-driven dynamic simulation package that allows the user to represent a system or a process by a block diagram. Once the representation is completed, Simulink may be used to digitally simulate the behavior of the continuous or discrete-time system. Simulink inputs can be Matlab variables from the workspace, or waveforms or sequences generated by Simulink itself. These Simulink-generated inputs can represent continuous-time or discrete-time sources. The behavior of the simulated system can be monitored using Simulink's version of common lab instruments, such as scopes, spectrum analyzers and network analyzers.

4.2 Background Exercises

INLAB REPORT: Submit these background exercises with the lab report.

4.2.1 Synthesis of Periodic Signals

Each signal given below represents one period of a periodic signal with period T_0.

1. Period $T_0 = 2$. For $t \in [0, 2]$:

$$s(t) = \text{rect}\left(t - \frac{1}{2}\right) \tag{4.1}$$

[1] This content is available online at <http://cnx.org/content/m18077/1.4/>.

2. Period $T_0 = 1$. For $t \in \left[-\frac{1}{2}, \frac{1}{2}\right]$:

$$s(t) = rect(2t) - \frac{1}{2} \tag{4.2}$$

For each of these two signals, do the following:

i: Compute the Fourier series expansion in the form

$$s(t) = a_0 + \sum_{k=1}^{\infty} A_k sin(2\pi k f_0 t + \theta_k) \tag{4.3}$$

where $f_0 = 1/T_0$.

HINT: You may want to use one of the following references: Sec. 4.1 of "Digital Signal Processing", by Proakis and Manolakis, 1996; Sec. 4.2 of "Signals and Systems", by Oppenheim and Willsky, 1983; Sec. 3.3 of "Signals and Systems", Oppenheim and Willsky, 1997. Note that in the expression above, the function in the summation is $sin(2\pi k f_0 t + \theta_k)$, rather than a complex sinusoid. The formulas in the above references must be modified to accommodate this. You can compute the cos/sin version of the Fourier series, then convert the coefficients.

ii: Sketch the signal on the interval $[0, T_0]$.

4.2.2 Magnitude and Phase of Discrete-Time Systems

For the discrete-time system described by the following difference equation,

$$y(n) = 0.9y(n-1) + 0.3x(n) + 0.24x(n-1) \tag{4.4}$$

i: Compute the impulse response.
ii: Draw a system diagram.
iii: Take the Z-transform of the difference equation using the linearity and the time shifting properties of the Z-transform.
iv: Find the transfer function, defined as

$$H(z) \equiv \frac{Y(z)}{X(z)} \tag{4.5}$$

v: Use Matlab to compute and plot the magnitude and phase responses, $|H(e^{j\omega})|$ and $\angle H(e^{j\omega})$, for $-\pi < \omega < \pi$. You may use Matlab commands `phase` and `abs`.

4.3 Getting Started with Simulink

In this section, we will learn the basics of Simulink and build a simple system.

For help on "Simulink" click here[2]. For the following sections download the file Lab3Utilities.zip[3].

[2]See the file at <http://cnx.org/content/m18077/latest/simulink.pdf>
[3]See the file at <http://cnx.org/content/m18077/latest/Lab3Utilities.zip>

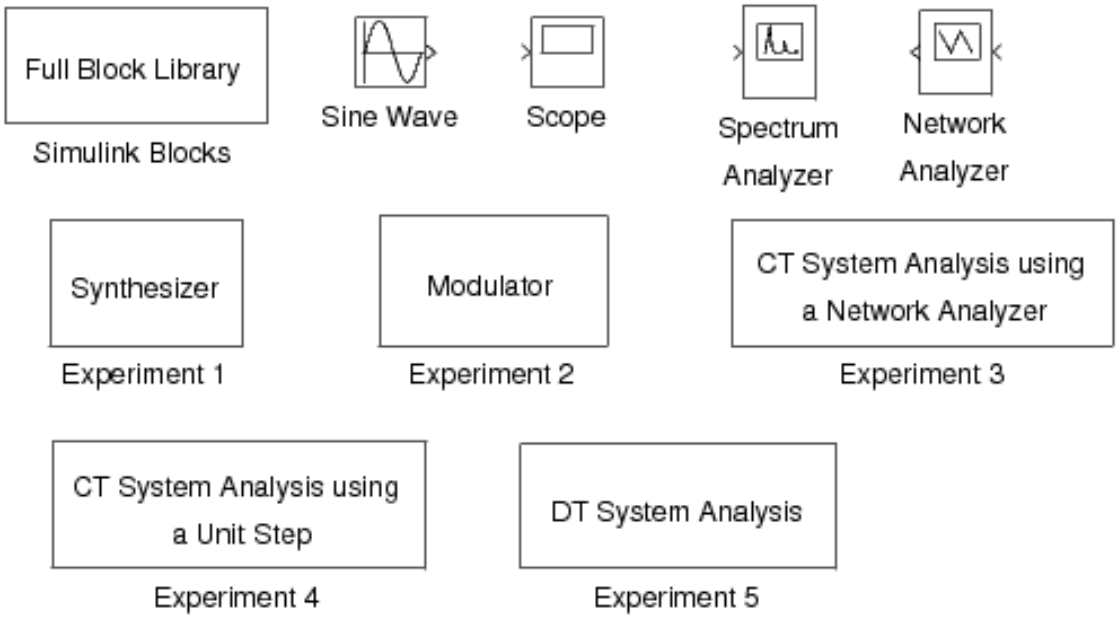

Figure 4.1: Simulink utilities for lab 3.

To get the library of Simulink functions for this laboratory, download the file Lab3Utilities.zip[4]. Once Matlab is started, type "Lab3" to bring up the library of Simulink components shown in Figure 4.1. This library contains a full library of Simulink blocks, a spectrum analyzer and network analyzer designed for this laboratory, a sine wave generator, a scope, and pre-design systems for each of the experiments that you will be running.

[4]See the file at <http://cnx.org/content/m18077/latest/Lab3Utilities.zip>

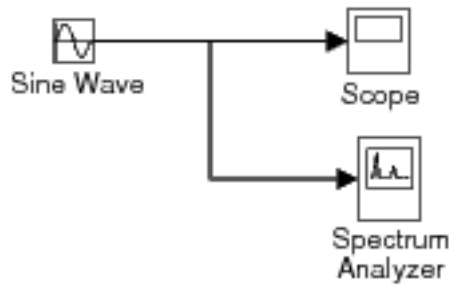

Figure 4.2: Simulink model for the introductory example.

In order to familiarize yourself with Simulink, you will first build the system shown in Figure 4.2. This system consists of a sine wave generator that feeds a scope and a spectrum analyzer.

1. Open a window for a new system by using the `New` option from the `File` pull-down menu, and select `Model`.
2. Drag the `Sine Wave`, `Scope`, and `Spectrum Analyzer` blocks from the `Lab3` window into the new window you created.
3. Now you need to connect these three blocks. With the left mouse button, click on the output of the `Sine Wave` and drag it to the input of the `Scope`. Now use the right button to click on the line you just created, and drag to the input of the `Spectrum Analyzer` block. Your system should now look like Figure 4.2.
4. Double click on the `Scope` block to make the plotting window for the scope appear.
5. Set the simulation parameters by selecting `Configuration Parameters` from the `Simulation` pull-down menu. Under the `Solver` tab, set the `Stop time` to 50, and the `Max step size` to 0.02. Then select `OK`. This will allow the Spectrum Analyzer to make a more accurate calculation.
6. Start the simulation by using the `Start` option from the `Simulation` pull-down menu. A standard Matlab figure window will pop up showing the output of the `Spectrum Analyzer`.
7. Change the frequency of the sine wave to `5*pi rad/sec` by double clicking on the `Sine Wave` icon and changing the number in the `Frequency` field. Restart the simulation. Observe the change in the waveform and its spectral density. If you want to change the time scaling in the plot generated by the spectrum analyzer, from the Matlab prompt use the `subplot(2,1,1)` and `axis()` commands.
8. When you are done, close the system window you created by using the `Close` option from the `File` pull-down menu.

4.4 Continuous-Time Frequency Analysis

For help on the following topics select the corresponding link: simulink[5] or printing figures in Simulink[6].

In this section, we will study the use and properties of the continuous-time Fourier transform with Simulink. The Simulink package is especially useful for continuous-time systems because it allows the simulation of their behavior on a digital computer.

[5]See the file at <http://cnx.org/content/m18077/latest/simulink.pdf>
[6]See the file at <http://cnx.org/content/m18077/latest/print.pdf>

4.4.1 Synthesis of Periodic Signals

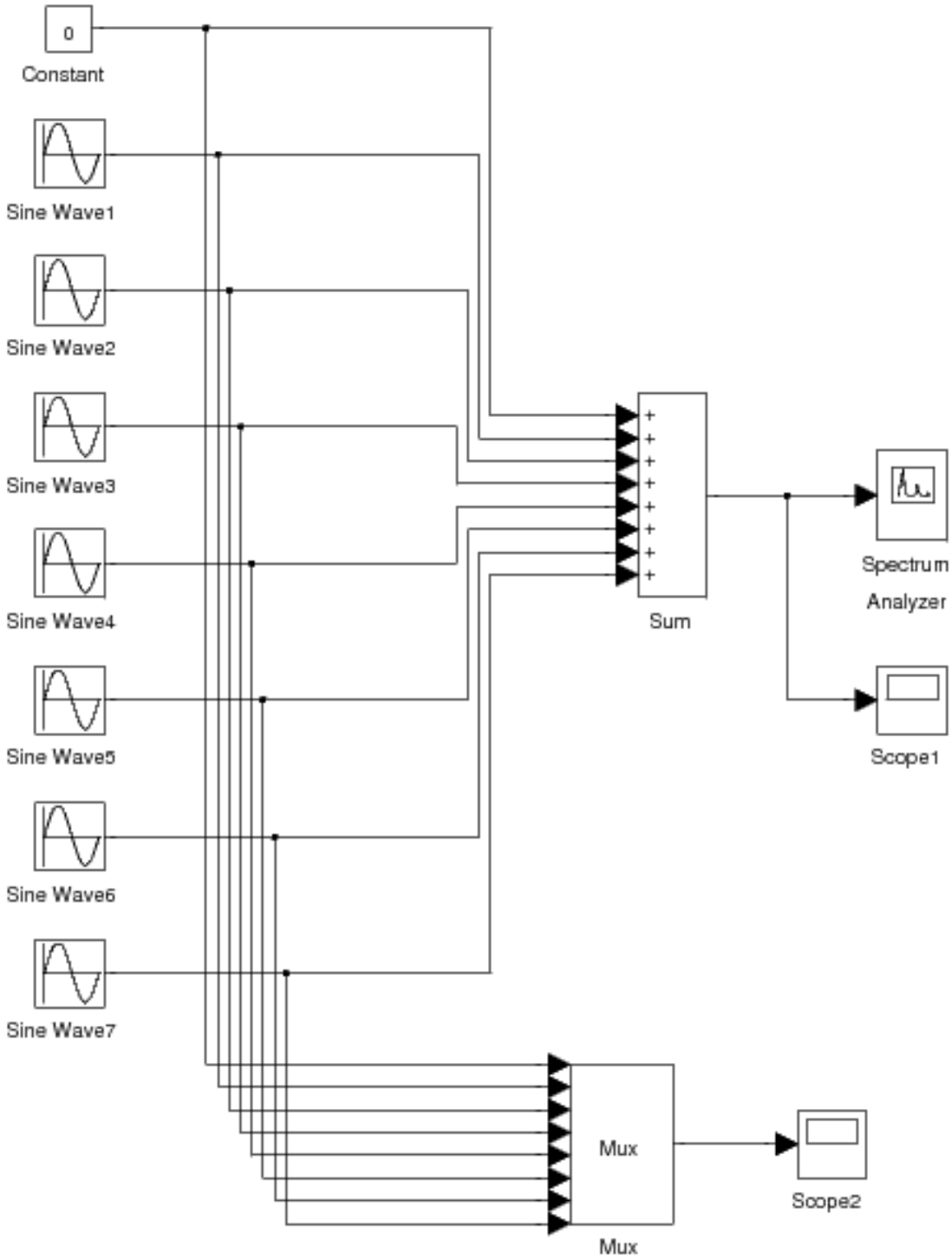

Figure 4.3: Simulink model for the synthesizer experiment.

Double click the icon labeled `Synthesizer` to bring up a model as shown in Figure 4.3. This system may be used to synthesize periodic signals by adding together the harmonic components of a Fourier series expansion. Each `Sin Wave` block can be set to a specific frequency, amplitude and phase. The initial settings of the `Sin Wave` blocks are set to generate the Fourier series expansion

$$x(t) = 0 + \sum_{\substack{k=1 \\ k \text{ odd}}}^{13} \frac{4}{k\pi} sin(2\pi kt) \quad . \tag{4.6}$$

These are the first 8 terms in the Fourier series of the periodic square wave shown in Figure 4.4.

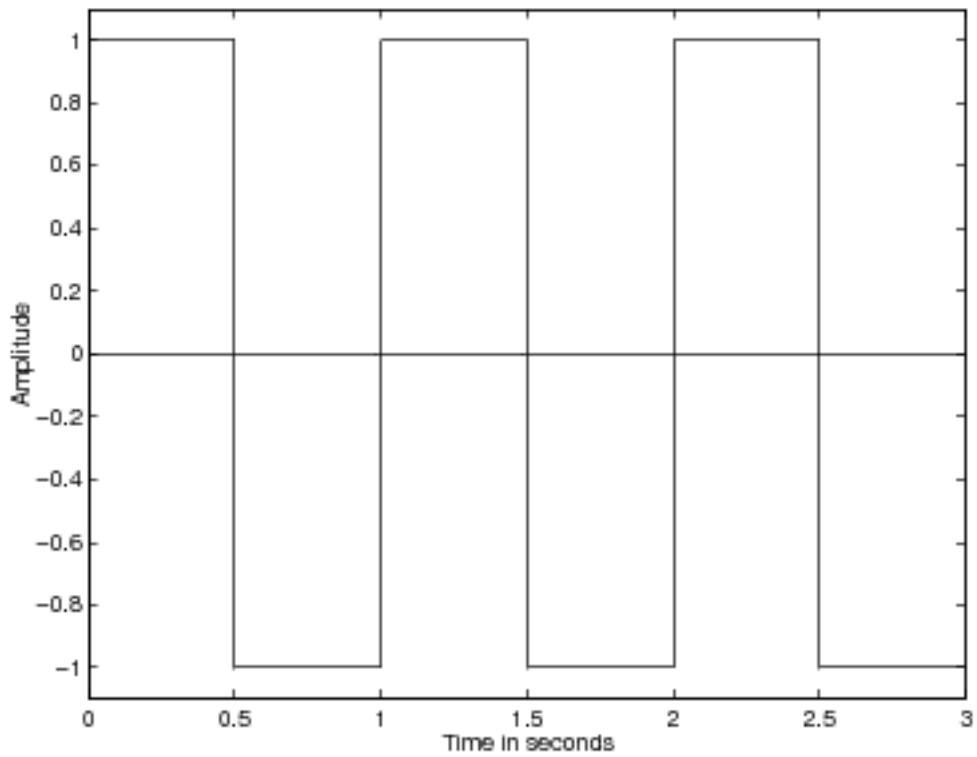

Figure 4.4: The desired waveform for the synthesizer experiment.

Run the model by selecting `Start` under the `Simulation` menu. A graph will pop up that shows the synthesized square wave signal and its spectrum. This is the output of the `Spectrum Analyzer`. After the simulation runs for a while, the `Spectrum Analyzer` element will update the plot of the spectral energy and the incoming waveform. Notice that the energy is concentrated in peaks corresponding to the individual sine waves. Print the output of the `Spectrum Analyzer`.

You may have a closer look at the synthesized signal by double clicking on the `Scope1` icon. You can also see a plot of all the individual sine waves by double clicking on the `Scope2` icon.

Synthesize the two periodic waveforms defined in the "Synthesis of Periodic Signals" (Section 4.2.1: Synthesis of Periodic Signals) section of the background exercises. Do this by setting the frequency, amplitude, and phase of each sinewave generator to the proper values. For each case, print the output of the `Spectrum Analyzer`.

INLAB REPORT: Hand in plots of the `Spectrum Analyzer` output for each of the three synthesized waveforms. For each case, comment on how the synthesized waveform differs from the desired signal, and on the structure of the spectral density.

4.4.2 Modulation Property

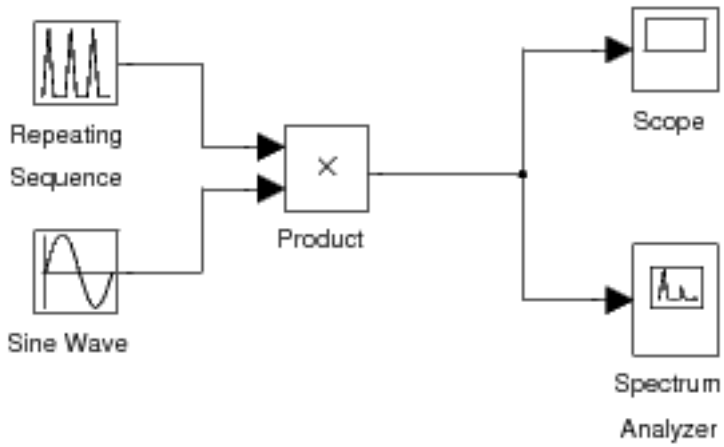

Figure 4.5: Simulink model for the modulation experiment.

Double click the icon labeled `Modulator` to bring up a system as shown in Figure 4.5. This system modulates a triangular pulse signal with a sine wave. You can control the duration and duty cycle of the triangular envelope and the frequency of the modulating sine wave. The system also contains a spectrum analyzer which plots the modulated signal and its spectrum.

Generate the following signals by adjusting the `Time values` and `Output values` of the `Repeating Sequence` block and the `Frequency` of the `Sine Wave`. The `Time values` vector contains entries spanning one period of the repeating signal. The `Output values` vector contains the values of the repeating signal at the times specified in the `Time values` vector. Note that the `Repeating Sequence` block does NOT create a discrete time signal. It creates a continuous time signal by connecting the output values with line segments. Print the output of the `Spectrum Analyzer` for each signal.

1. Triangular pulse duration of 1 sec; period of 2 sec; modulating frequency of 10 Hz (initial settings of the experiment).
2. Triangular pulse duration of 1 sec; period of 2 sec; modulating frequency of 15 Hz.
3. Triangular pulse duration of 1 sec; period of 3 sec; modulating frequency of 10 Hz.
4. Triangular pulse duration of 1 sec; period of 6 sec; modulating frequency of 10 Hz.

Notice that the spectrum of the modulated signal consists of of a comb of impulses in the frequency domain, arranged around a center frequency.

INLAB REPORT: Hand in plots of the output of the `Spectrum Analyzer` for each signal. Answer following questions: 1) What effect does changing the modulating frequency have on the spectral

density? 2) Why does the spectrum have a comb structure and what is the spectral distance between impulses? Why? 3) What would happen to the spectral density if the period of the triangle pulse were to increase toward infinity? (in the limit)

4.4.3 System Analysis

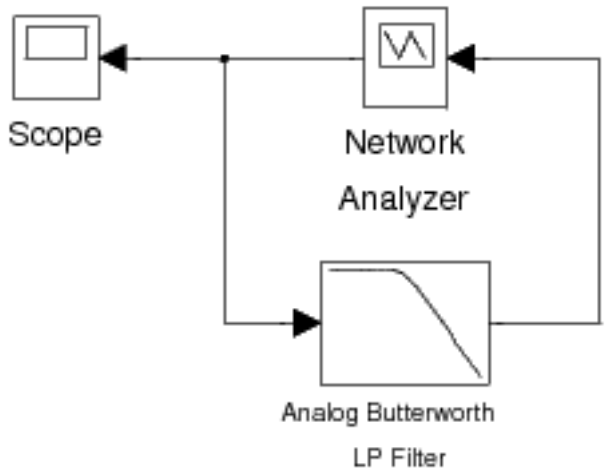

Figure 4.6: Simulink model for the continuous-time system analysis experiment using a network analyzer.

Double click the icon labeled `CT System Analysis using a Network Analyzer` to bring up a system as shown in Figure 4.6. This system includes a `Network Analyzer` model for measuring the frequency response of a system. The `Network Analyzer` works by generating a weighted chirp signal (shown on the `Scope`) as an input to the system-under-test. The analyzer measures the frequency response of the input and output of the system and computes the transfer function. By computing the inverse Fourier transform, it then computes the impulse response of the system. Use this setup to compute the frequency and impulse response of the given fourth order Butterworth filter with a cut-off frequency of 1Hz. Print the figure showing the magnitude response, the phase response and the impulse response of the system. To use the tall mode to obtain a larger printout, type `orient('tall');` directly before you print.

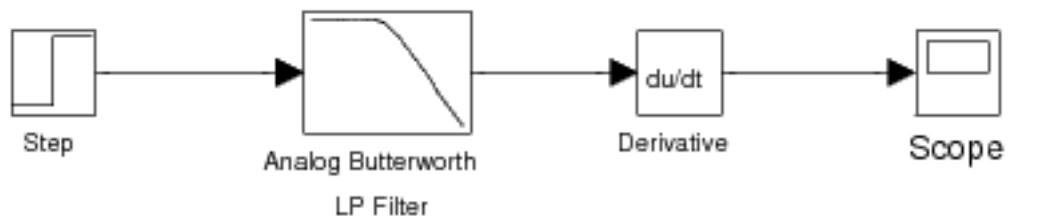

Figure 4.7: Simulink model for the continuous-time system analysis experiment using a unit step.

An alternative method for computing the impulse response is to input a step into the system and then to compute the derivative of the output. The model for doing this is given in the `CT System Analysis using a Unit Step` block. Double click on this icon and compute the impulse response of the filter using this setup (Figure 4.7). Make sure that the characteristics of the filter are the same as in the previous setup. After running the simulation, print the graph of the impulse response.

INLAB REPORT: Hand in the printout of the output of the `Network Analyzer` (magnitude and phase of the frequency response, and the impulse response) and the plot of the impulse response obtained using a unit step. What are the advantages and disadvantages of each method?

4.5 Discrete-Time Frequency Analysis

In this section of the laboratory, we will study the use of the discrete-time Fourier transform.

4.5.1 Discrete-Time Fourier Transform

The DTFT (Discrete-Time Fourier Transform) is the Fourier representation used for finite energy discrete-time signals. For a discrete-time signal, $x(n)$, we denote the DTFT as the function $X\left(e^{j\omega}\right)$ given by the expression

$$X\left(e^{j\omega}\right) = \sum_{n=-\infty}^{\infty} x(n)\, e^{-j\omega n} \ . \tag{4.7}$$

Since $X\left(e^{\mathrm{j}\omega}\right)$ is a periodic function of ω with a period of 2π, we need only to compute $X\left(e^{\mathrm{j}\omega}\right)$ for $-\pi < \omega < \pi$.

Write a Matlab function `X=DTFT(x,n0,dw)` that computes the DTFT of the discrete-time signal `x` Here `n0` is the time index corresponding to the 1st element of the `x` vector, and `dw` is the spacing between the samples of the Matlab vector `X`. For example, if `x` is a vector of length `N`, then its DTFT is computed by

$$X(w) = \sum_{n=1}^{N} x(n)\, e^{-jw(n+n0-1)} \tag{4.8}$$

where w is a vector of values formed by `w=(-pi:dw:pi)` .

HINT: In Matlab, `j` or `i` is defined as $\sqrt{-1}$. However, you may also compute this value using the Matlab expression `i=sqrt(-1)`.

For the following signals use your DTFT function to

i: Compute $X\left(e^{j\omega}\right)$
ii: Plot the magnitude and the phase of $X\left(e^{j\omega}\right)$ in a single plot using the `subplot` command.

HINT: Use the `abs()` and `angle()` commands.

1.
$$x(n) = \delta(n) \tag{4.9}$$

2.
$$x(n) = \delta(n-5) \tag{4.10}$$

3.
$$x(n) = (0.5)^n u(n) \tag{4.11}$$

INLAB REPORT: Hand in a printout of your Matlab function. Also hand in plots of the DTFT's magnitude and phase for each of the three signals.

4.5.2 System Analysis

For help on printing Simulink system windows click here[7].

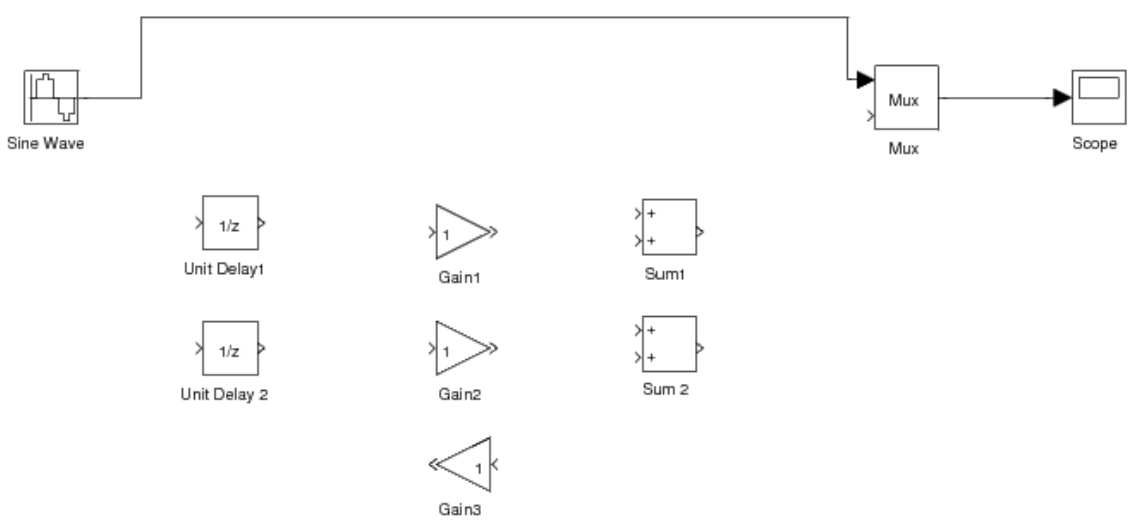

Figure 4.8: Incomplete Simulink setup for the discrete-time system analysis experiment.

[7] See the file at <http://cnx.org/content/m18077/latest/print.pdf>

Double click the icon labeled `DT System Analysis` to bring up an incomplete block diagram as shown in Figure 4.8. It is for a model that takes a discrete-time sine signal, processes it according to a difference equation and plots the multiplexed input and output signals in a graph window. Complete this block diagram such that it implements the following difference equation given in "Magnitude and Phase of Discrete-Time Systems" (Section 4.2.2: Magnitude and Phase of Discrete-Time Systems) of the background exercises.

$$y(n) = 0.9y(n-1) + 0.3x(n) + 0.24x(n-1) \tag{4.12}$$

You are provided with the framework of the setup and the building blocks that you will need. You can change the values of the `Gain` blocks by double clicking on them. After you complete the setup, adjust the frequency of `Sine Wave` to the following frequencies: $\omega = \pi/16$, $\omega = \pi/8$, and $\omega = \pi/4$. For each frequency, make magnitude response measurements using the input and output sequences shown in the graph window. Compare your measurements with the values of the magnitude response $|H(e^{j\omega})|$ which you computed in the background exercises at these frequencies.

An alternative way of finding the frequency response is taking the DTFT of the impulse response. Use your DTFT function to find the frequency response of this system from its impulse response. The impulse response was calculated in "Magnitude and Phase of Discrete-Time Systems" (Section 4.2.2: Magnitude and Phase of Discrete-Time Systems) of the background exercises. Plot the impulse response, and the magnitude and phase of the frequency response in the same figure using the `subplot` command.

INLAB REPORT: Hand in the following: 1) Printout of your completed block diagram. 2) Table of both the amplitude measurements you made and their theoretical values. 3) Printout of the figure with the impulse response, and the magnitude and phase of the frequency response.