Trust Series from High-Tech

for all your gas equipment and safety needs

GENUINE HIGH-TECH PRODUCTS

HIGH-TECH GROUP OF COMPANIES

Introduction 1

Industrial Gas Pressure Regulators 2

Gas Welding & Cutting Blowpipes 3

Gas Cutting Machines 4

Welding Accessories 5

Speciality Gas Pressure Regulators 6

Helium Gas Balloon Regulators 7

Gas Control Systems 8

Safety Devices 9

ABOUT HIGH - TECH

Welcome to High-Tech Group of Companies, your local expert for all your gas equipment and safety needs. High-Tech is committed to providing you with a complete of welding and cutting equipment and safety devices.

- Three decades ago in 1976, High-Tech started as a SSI unit rendering industrial gas equipment's management services solely to BHPV Ltd.
- During 1990, High-Tech created and sustained a brand image for quality products realizing the need for the industrial gas equipments
- In 2000, High-Tech responded to market demands & began to manufacture import substitutes for specialty gas welding and cutting equipment.
- High-Tech started exploring the export market since 2004.
- There has been no looking back as we continue to grow and expand…….

Your Local Expert with Global Strength ::

High-Tech is the quality manufacturers and suppliers of Industrial Gas Equipments, a with dedicated work force to serve our Indian Industry. Being a professional engineering company with more than 200+ customers - Public, Private and MNCs in India and also Exports the products to Overseas. Our large global presence and depth of industrial experience gives confidence, expertise and innovative ideas.

The Group Consists of the following Companies ::

- High-Tech Products & Engg Systems
- High-Tech Air and Flame Products [P] Ltd
- Smart Technologies

ABOUT HIGH - TECH

High-Tech At a Glance ::

- One of the major player in a niche market segment of industrial gas equipments.
- Manufacturer of Regulators, Cutting and Welding Equipment for user industries.
- Leading innovator in industrial gas pressure and flow control systems as well as in application technologies.
- Establishing unique and strong Brand image.

Major Products ::

- Industrial Gas Equipments
- Medical Gas Equipments
- Speciality Gas Equipments

The Services ::

- Total material management.
- Safety and technical training.
- Pipe line leak detection, purging and cleaning services.
- Design and installation of gas delivery system.
- Equipment – management services.

ABOUT HIGH - TECH

The Markets ::
Our gas equipment and services are used in every industrial sectors include ::

- Automotive
- Chemicals
- Energy
- Heat treatment
- Consumer goods and retail
- Defence and aerospace
- Electronics and electronics packaging
- Environment, water and waste
- Fibre optics and glass
- General fabrication and shipbuilding
- Hospitality, food and beverage
- Healthcare and pharmaceutical
- Iron and steel and non-ferrous metals
- Laboratories and research

Manufacturing / Technology Centre ::

Smart Technologies ::
Survey No. 163/10, Lingalavalasa Village,
Bhogapuram Mandal-Dist, Vizianagaram-531152, AP, India

For Domestic Market ::

High-Tech Products & Engineering Systems
45-57-2/5 Narasimha Nagar, Visakhapatnam-530024.
telefax : +91-8912798871 e mail : high_tech@satyam.net.in

For Export Market ::

High-Tech Air & Flame Products [P] Ltd
45-57-2/5 Narasimha Nagar, Visakhapatnam-530024. India
telefax : +91-8912798871 e mail : high_tech90@yahoo.com

INDUSTRIAL GAS PRESSURE REGULATORS

Regulator with FBA

Trust Series 18 LP

Pressure Regulator -
LPG / Propane / Cutting Gas
with Safety Gauge & Flash Back Arrestor
2 Port Configuration
Industrial Purpose
Inlet Size : 25.6 mm/22 mm/20 mm

Bottom / Side / Rear Entry

Gas Services :

- LPG
- Propane
- Cutting Gas

Trust Series 200 - Y

Gas Regulator, Single Stage
2 Gauges

Brass Construction
Bottom / Side / Rear Entry

Gas Services :

- Oxygen
- Hydrogen
- CO2
- Nitrogen
- Argon
- Helium

Trust Series 400

Two Stage, Cylinder Regulator
with 2 Safety Gauges and Safety
Relief Valve

Bottom / Side / Rear Entry

Gas Services :

- Oxygen
- Hydrogen
- CO2
- Nitrogen
- Argon
- Helium

Trust Series 214

Heavy Duty High Flow
Single Stage Gas Regulator

Bottom / Side / Rear Entry

Avilable for Oxygen, Nitrogen, Co2,
Argon, Hydrogen, Helium Gases

Applications :

- Heating
- Cutting
- Pipe Line / Manifold System
- Flame Cutting / Biller Cutting
- Foundry

Trust Series 81 LP

Adjustable High Pressure Regulator
- Propane / LPG / Cutting Gas

with Safety Gauges

2 Port Configuration
Industrial Purpose
Bottom / Side / Rear Entry

Gas Services :

- LPG
- Propane

Single Stage Regulator with Flow Meter

TIG / MIG - 200Y - Series

Brass Construction

Single Stage Regulator + Flow Meter

Tig & Mig Welding Process
Bottom / Side / Rear Entry

Gas Services :

- Argon
- Helium
- CO2

Single Stage Regulator without Flow Meter

E-SERIES-009

Argon Gas Flow Gauge Regulator

Single Stage With Two Gauge

Bottom / Side / Rear Entry

Gas Services :

- Argon
- CO2
- Co2+ Argon Gas Mixtuers

Trust Series - 36 LP

Fine Flow Gas Regulator - LPG / Propane / Cutting Gas

with 2 Safety Gauges and Flash Back Arrestor (Optional)
2 Port Configuration

Industrial Purpose

Trust Series - 36 LP series Regulator is intended for pressure control of liquefied gases. It is designed to provide quality performance. Constant control and pressure delivery inspite of inlet pressure variations.

Applications :

- Welding
- Heating
- Cutting
- Soldering
- Brazing

Trust Series - 333

Co2 Gas Regulator Built In Heater & Flowmeter

Brass Construction

Tig & Mig Welding Process, Side Entry

Gas Services :

- Argon
- CO2

Trust Series - 333 , Co2 Gas Regulator Built In Heater & Flow meter intended for applications that require flow rate, consistent delivery pressure. The compact pressure compensated design meant for professional welders, laboratory and industrial process user. It ensures fine flow control of the relative gas for excellent end result.

In view of development, we reserve the right to change the equipment/dimension without notice.

An ISO Certified Company

HIGH-TECH PRODUCTS & ENGG SYSTEMS
HIGH-TECH AIR & FLAME PRODUCTS [P] LTD

45-57-2/5, Narasimha Nagar, Visakhapatnam-530 024 India. Tel : +91-891-2798985, Fax : +91-891-2798871 e-mail : high_tech90@yahoo.com, Web : www.high-techindia.com

BLOWPIPES

Conforms to IS:7653

Trust series 504

WELDING BLOWPIPE, LIGHT WEIGHT

Style - O , Oxy - Acetelyne Process

Specifications :

Capacity	Thin sheet metal up to 1.5 mm
Inlet	Oxygen 1/4" B.S.P. RH & Acetylene 1/4" B.S.P. LH
Weight	250 Grams
Length	20 cm (with out tip)
Hose	5 mm bore hose (Blue-Oxygen & Red-Acetylene)

Trust Series 549

WELDING BLOWPIPE, LIGHT WEIGHT

Oxy-Acetelyne / Fuel Gas Application

Light Welding Application

Applications :

- Welding
- Brazing
- Lead Soldering
- Heating

Trust Series 502 H

WELDING BLOWPIPE, HEAVY DUTY

Oxy-Acetelyne / Fuel Gas Application

Heavy Welding Application

Applications :

- Welding
- Brazing
- Lead Soldering
- Heating

Trust Series 630

SUPER HEATING TORCH

Oxy-Propane / Natural Gas
General Heating Purpose

Applications :

- Heavy Heating

Trust Series 500

HAND CUTTING BLOWPIPE

Oxy-Acetylene / Fuel Gas Cutting

Applications :

- MS Cutting
- Cast Iron Cutting
- Sample Cutting

Trust Series 250 NM

NOZZLE MIXING STYLE CUTTING BLOWPIPE

Oxy-Fuel Gas Cutting

Applications :

- MS Cutting
- Cast Iron Cutting
- Sample Cutting

Trust Series 513

HEATING TORCH, LPG/ PROPANE

For Pre-heating applications

Applications :

- Pre Heating

Trust Series 500 / 180 D-L

HEAVY DUTY GAS CUTTING BLOWPIPE - SRIGHT HEAD

Oxy+Fuel Gas Process,
Built with Flash Back Arrestors

Applications :

- Billet
- Ingot
- Sample
- Bloom

02- Lance Holder

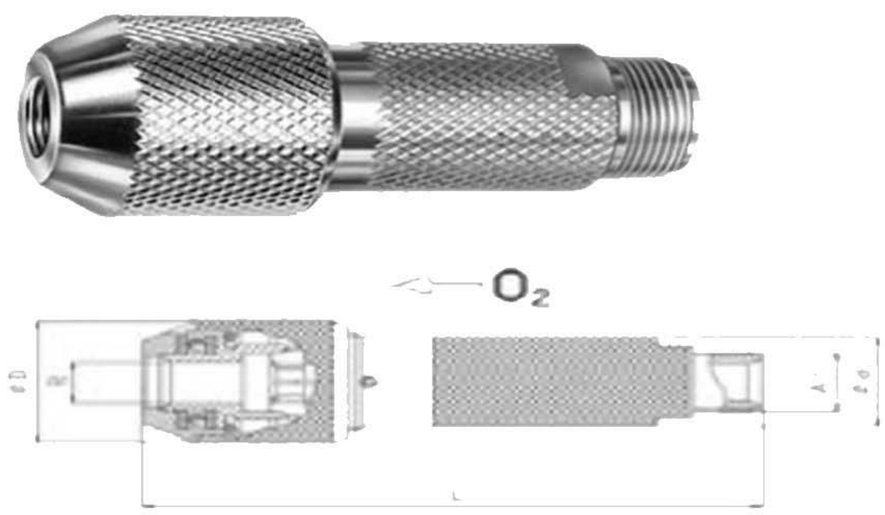

- Lance holder with turnable clamping head, ball bearings, chuck and NEOPRENE seal

Optional Accessories :

- Flashback Arrestor
- Hose Reel
- Stop Valve
- Pressure Regulator

Trust Series 54 CG

MACHINE TORCH, CCM

Oxy - Fuel Gas Flame Cutting

Applications :

- Billet
- Ingot
- Sample
- Bloom

In view of development, we reserve the right to change the equipment/dimension without notice.

An ISO Certified Company

HIGH-TECH PRODUCTS & ENGG SYSTEMS
HIGH-TECH AIR & FLAME PRODUCTS [P] LTD

45-57-2/5, Narasimha Nagar, Visakhapatnam-530 024 India. Tel : +91-891-2798985, Fax : +91-891-2798871 e-mail : high_tech90@yahoo.com, Web : www.high-techindia.com

GAS CUTTING MACHINE

PORTABLE FLAME CUTTING MACHINE

Trust Cut 90

Portable Flame Cutting Machine
Oxy - Fuel Process

General Purpose

Trust Cut 90, is an unique high quality mechanized product based on portable oxygen cutting technology. It is simple, inexpensive and light in weight.

The Trust Cut 90 is also capable of providing speedy, convenient, versatile method of cutting and shaping steel upto 75mm thickness. And suitable for ship-yards, large and small engineering sectors, site use etc.. for machine cutting performance.

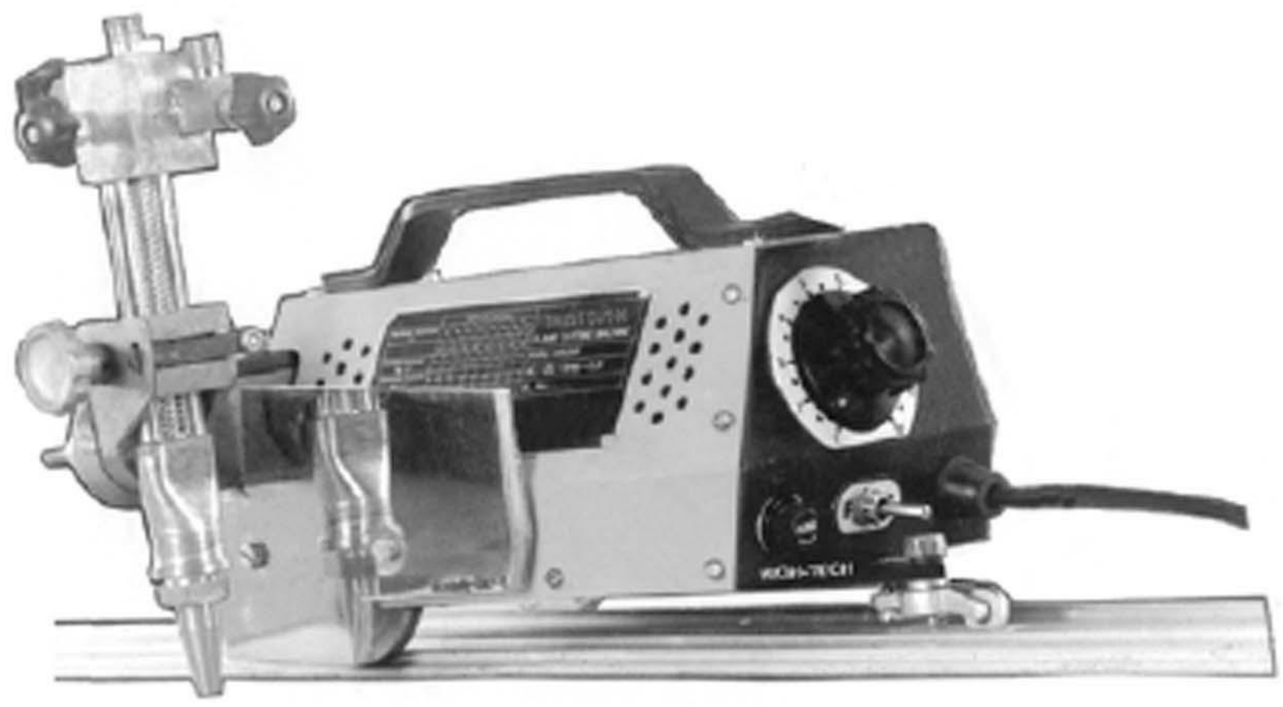

Specialities :

- Universal motor for smooth operation from 220V-240V, single phase AC or DC supplies
- Infinitely variable speed control
- Maximum power consumption is 80 Watts
- Fine control valve system for cutting Oxygen, Heating Oxygen and fuel gas, mounted on cutting torch.
- Cutting torch suitable for use with Acetylene or propane with the appropriate nozzle.
- Straight Cutting, Square Cut, Bevel and circle cutting can obtained, with the appropriate accessories.

Accessories (Optional) :

- Straight Cutting track 1.8mm (Aluminium)
- Circle Cutting Attachment
- 5mm dia, Hose pipe with Flashback Arrestor for Oxygen(cutting, Heating Gas) and fuel gas.

In view of development, we reserve the right to change the equipment/dimension without notice.

An ISO Certified Company

HIGH-TECH PRODUCTS & ENGG SYSTEMS
HIGH-TECH AIR & FLAME PRODUCTS [P] LTD

45-57-2/5, Narasimha Nagar, Visakhapatnam-530 024 India. Tel : +91-891-2798985, Fax : +91-891-2798871 e-mail : high_tech90@yahoo.com, Web : www.high-techindia.com

Trust Series HTPE - EH - 9

Electrode Holder

For Metal Arc welding applications

Overview :

- Type: Semi/Fully Insulated
- Ranges : 300A/500A/600/800A
- Current rating up to 800 amps
- Suitable for electrode dia up to 5 mm

Trust Series D27

Cable Connector / Joint

Industrial Purpose

Standard Specification Sizes :

1. 10-25 SQ. MM
2. 35-50 SQ. MM
3. 50-70 SQ. MM
4. 70-95 SQ. MM

Trust Series 108

Hose Pipe - Welding & Cutting

Industrial Purpose

Accessories (Optional) :

- Hose Clips
- Trust Series 909, Flashback
- Arrestors Dry Type for Regulator & Torch mounting.

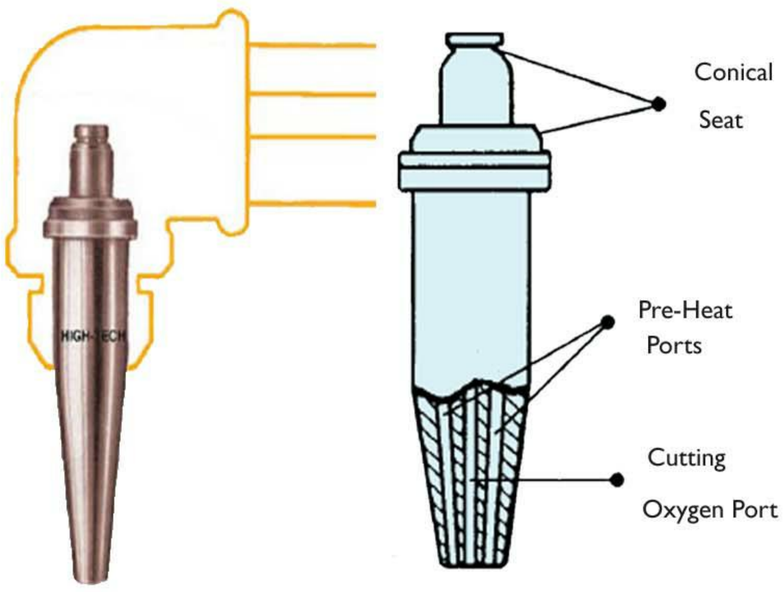

Trust Series 2T

Gas Cutting Nozzle
Single Piece / Two Piece Construction

Oxy-Fuel Gas Cutting Application

Applications :

- Gas Cutting
- Flame / CNC Cutting

Trust Series 3T

3 Seater Cutting Nozzle

ANM Style

Size	Cutting Thickness
ANM 1/32	3 - 6
ANM 3/64	6 - 20
ANM 1/16	20 - 75
ANM 5/64	75 - 125
ANM 3/32	125 - 175
ANM 1/8	175 - 300

PNM Style

Size	Cutting Thickness
PNM 1/32	3 - 6
PNM 3/64	6 - 20
PNM 1/16	20 - 75
PNM 5/64	75 - 125
PNM 3/32	125 - 175
PNM 1/8	175 - 300

ANME Style

Size	Cutting Thickness
ANME 1/32	3 - 6
ANME 3/64	5 - 12
ANME 1/16	10 - 75
ANME 5/64	70 - 100
ANME 3/32	90 - 150
ANME 1/8	190 - 300

PNME Style

Size	Cutting Thickness
PNME 1/32	3 - 6
PNME 3/64	5 - 12
PNME 1/16	10 - 75
PNME 5/64	70 - 100
PNME 3/32	90 - 150
PNME 1/8	190 - 300

MIG Gun / Torch Spare Parts

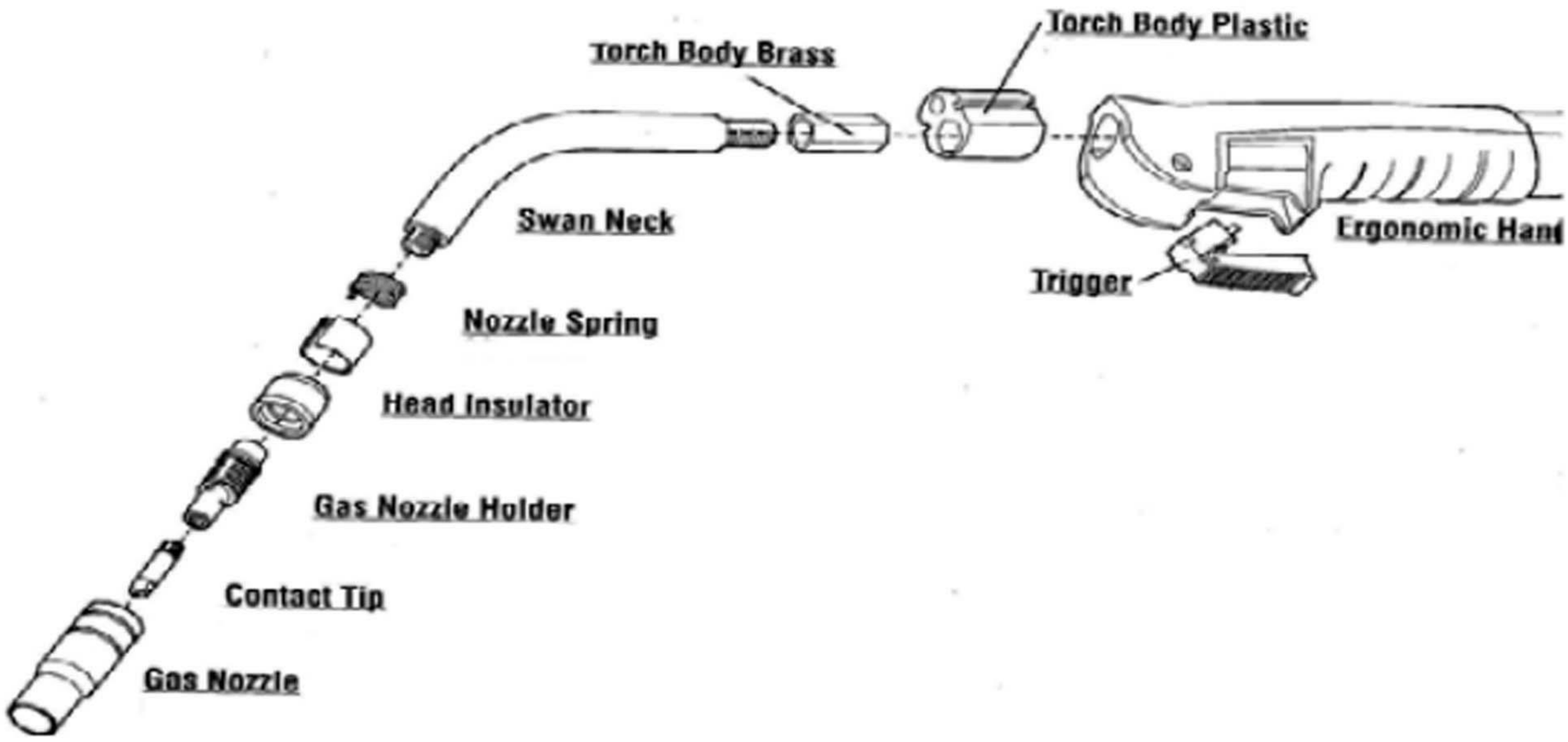

We offer a complete range of MIG welding torch replacement parts and consumable suitable to all brands like :

- BINZEL
- LINCOLN
- TWECO
- MILLER
- ESAB
- PANASONIC
- OTC
- IGM
- FRONIUS
- HOBART
- BERNARD
- TOKIN
- DAIHEN
- TREGASKISS
- C.K. SYSTEMATICS
- M.K. PRODUCTS

These replacement parts are no compromise on quality and commitments to excellent. They are Ideal performer, priced reasonably. Available with us EX-stock. We also offer parts as per customer satisfaction.

In view of development, we reserve the right to change the equipment/dimension without notice.

An ISO Certified Company

HIGH-TECH PRODUCTS & ENGG SYSTEMS
HIGH-TECH AIR & FLAME PRODUCTS [P] LTD

45-57-2/5, Narasimha Nagar, Visakhapatnam-530 024 India. Tel : +91-891-2798985, Fax : +91-891-2798871 e-mail : high_tech90@yahoo.com, Web : www.high-techindia.com

SPECIALITY GAS REGULATORS

KS - 300Y - 1

Single Stage SS Diaphragm
Pressure Reducing Regulator

SS Construction

Six Port Configuration

Bottom / Side / Rear Entry

Suitable For Corresive / Non- Corresive Gases

Applications :

- Analyser Systems
- Purge Gases
- Instrumentation control
- Pressure test & calibration system
- High purity carrier gases

KS - 300Y - 2

Single Stage SS Diaphragm
Pressure Reducing Regulator

Brass Construction

Six Port Configuration

Bottom / Side / Rear Entry

Suitable For Non-Corresive Gases

Applications :

- Analyser Systems
- Purge Gases
- Instrumentation control
- Pressure test & calibration system
- High purity carrier gases

KS - 400Y - 1

Multi Stage SS Diaphragm
Pressure Reducing Regulator

SS Construction

Six Port Configuration

Bottom / Side / Rear Entry

Suitable For Corresive / Non- Corresive Gases

Applications :

- Analyser Systems
- Purge Gases
- Instrumentation control
- Pressure test & calibration system
- High purity carrier gases

KS - 400Y - 2

Multi Stage SS Diaphragm
Pressure Reducing Regulator

Brass Construction

Six Port Configuration

Bottom / Side / Rear Entry

Suitable For Non-Corresive Gases

Applications :

- Analyser Systems
- Purge Gases
- Instrumentation control
- Pressure test & calibration system
- High purity carrier gases

In view of development, we reserve the right to change the equipment/dimension without notice.

HIGH-TECH PRODUCTS & ENGG SYSTEMS
HIGH-TECH AIR & FLAME PRODUCTS [P] LTD

45-57-2/5, Narasimha Nagar, Visakhapatnam-530 024 India. Tel : +91-891-2798985, Fax : +91-891-2798871 e-mail : high_tech90@yahoo.com, Web : www.high-techindia.com

GAS BALLOON REGULATORS

BMR - 001

BMR - 002

Basic Model Helium Gas Balloon Regulators

Inflators, Helium Gas Balloon Regulators are durable easy-to-install and easy-to-use. Rubber tilt valve is simple to replace if it gets damaged due to excessive wear and tear. Models are available with or without content gauges.

Applications :

- Made from Extruded Brass
- Precision Machined
- Light weight Piston Design
- Maximum inlet pressure is 3000 PSI
- Delivery pressure 50-65 PSI
- Easy to read Cylinder Content gauge [BMR - 002 Model]
- Easy to use - vide models / ranges available for selection
- Inlet connection 5/8" BSP RH Nut & Bull Nose Nipple
- Outlet connection 3/8" BSP M DIN & other standards, on request

BGR - 001

BGR - 002

BGR - 003

Premium Model Helium Gas Balloon Regulators

Inflators, Helium Gas Balloon Regulators are durable easy-to-install and easy-to-use. Rubber tilt valve is simple to replace if it gets damaged due to excessive wear and tear. Models are available with or without content gauges.

Applications :

- Made from Extruded Brass
- Precision Machined
- Light weight Piston Design
- Maximum inlet pressure is 3000 PSI
- Delivery pressure 50-65 PSI
- Easy to read Cylinder Content gauge
- Easy to use - vide models / ranges available for selection
- Inlet connection 5/8" BSP RH Nut & Bull Nose Nipple
- Outlet connection 3/8" BSP M

In view of development, we reserve the right to change the equipment/dimension without notice.

HIGH-TECH PRODUCTS & ENGG SYSTEMS
HIGH-TECH AIR & FLAME PRODUCTS [P] LTD

45-57-2/5, Narasimha Nagar, Visakhapatnam-530 024 India. Tel : +91-891-2798985, Fax : +91-891-2798871 e-mail : high_tech90@yahoo.com, Web : www.high-techindia.com

GAS CONTROL SYSTEMS

HTPENH-301

Portable Leak Gas Detector

Used to inspect the combustible gas concentation and toxic gas concentration in industrial environment continuously.

Features :

- Large Screen LCD
- Large capacity battery
- Easy maintainence

HTPENH-303

Wall Mounted Gas
Leak Alarm Detector

Used in the industrial field alarming device gas detection alarm

Features :

- High Accuracy
- Water Proof

Flue Gas Conditioning System

FLUE GAS CONDITIONING

A new system to strengthen the environmental management, provide optimum performance, improving the productivity and control pollution.

Applications :

- Ammonia
- So2

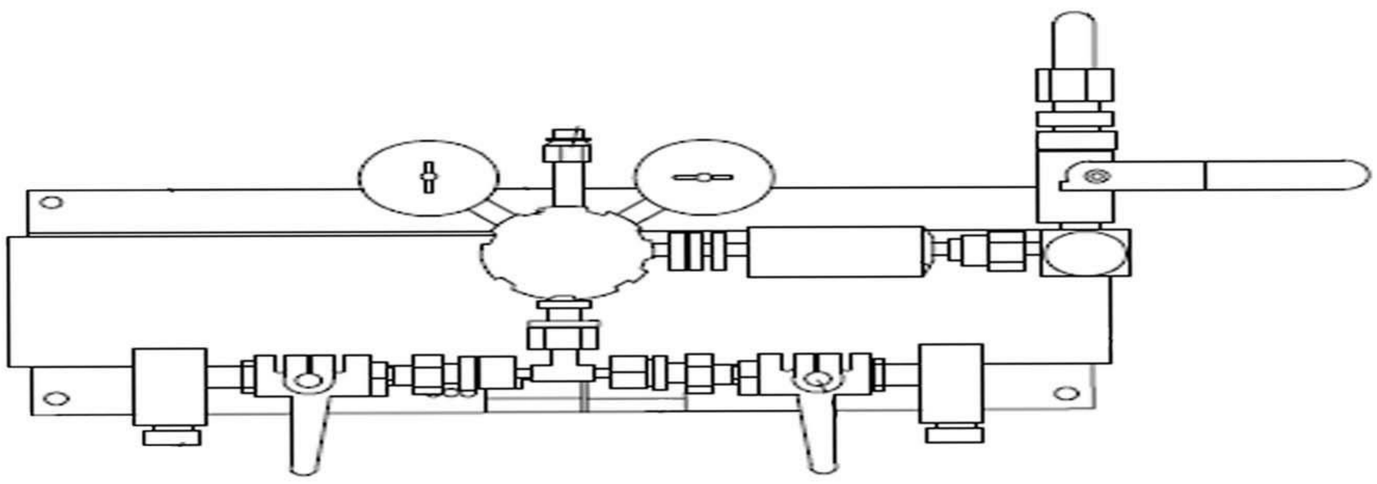

Gas Control Panel

Features :

- Wall and cabinet mounting pressure control panels for industrial gases
- Single stage systems for 1 or 2/4 cylinders
- Ergonomically designed

Note : Gas Control Panels are available for all gases and manifold systems

Trust Series 909

Flashback Arrestor - Dry type
Pipeline (line), Manifold

Trust Series 909 is Flashback Areestors are,as the name implies mounted stright on pipeline,Manifold and regulation.This system has two functions :

- They stop the flame in the event of back fire with help of the flame arrestor
- Also they prevent reverse flow with the help of a built in check valve

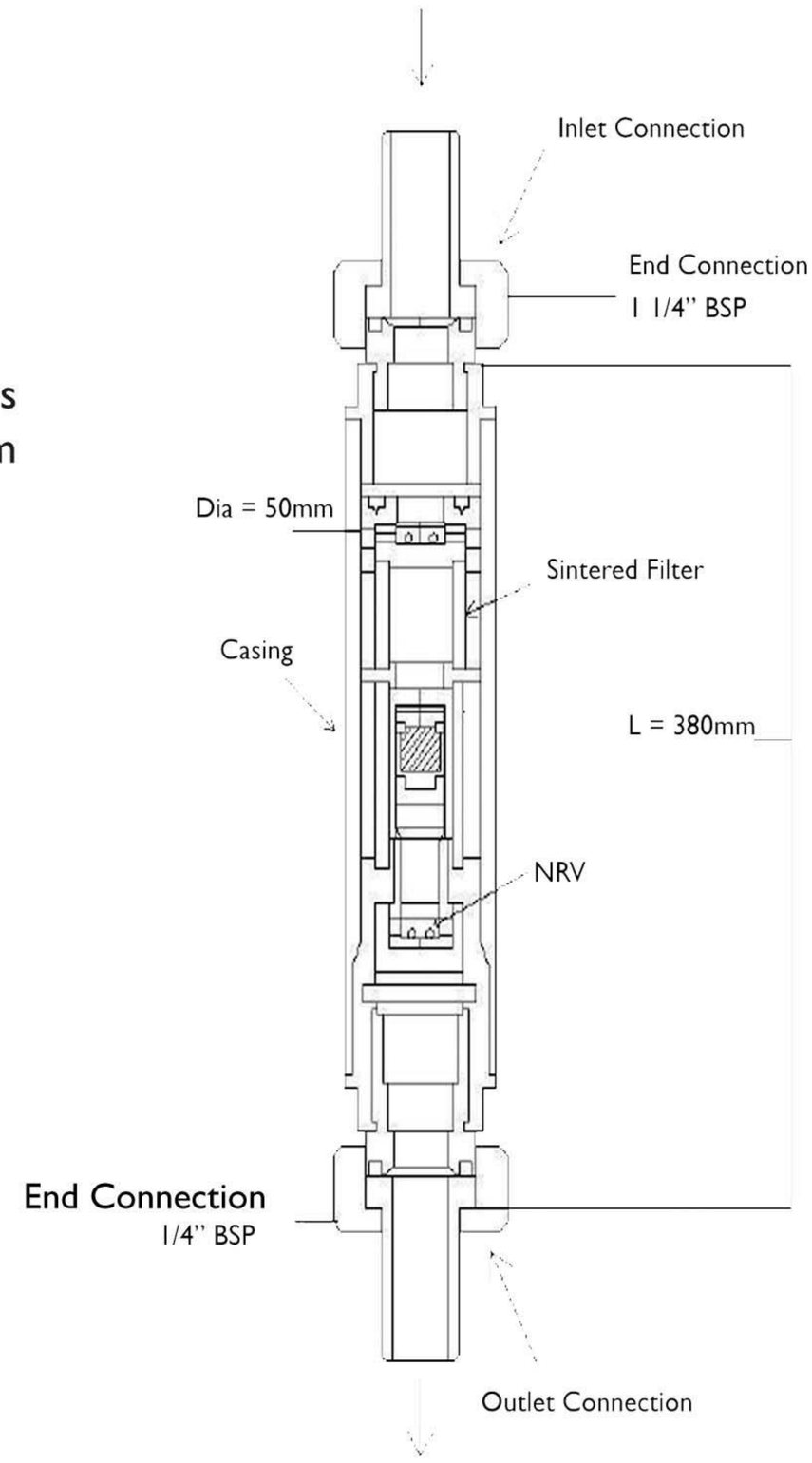

Special Features and benefits :

- Built in check valve protects against reverse flow.
- 100% tested forrellability and performance.
- Color coded for easy identifaiction.
- Designed for fast and easy installation.
- Available for Gases like Oxygen, Hydrogen, Acetylene, Propane & Cutting Gas.

PRESSURE REDUCING VALVE

Bill of Material :

Sno.	Item Description	Qty.	Unit	Specification
1.	Pressure Reducing valve	01	Nos.	As per Spec.
2.	Flange (PRV Side)	01	Set	ANSI 150
3.	Counter Flange	01	Set	ANSI 150
4.	Fasteners	01	Set	Grade 8.8
5.	Gaskets	01	Set	CAF
6.	Inbuilt Safety Vent	01	Nos.	Manufacturer's Std.

Name of the Item : Pressure Reducing Valve

Material Construction : Compactable To Gas

Type of End Connection : Flanged

Type : Single Stage

Inlet & Outlet Indication : Pressure Guages

Gas Service : Corresive & Non-Corresive Gases

Mounting : 1.5" Pipeline

Safety : Inbuilt Safety Vent

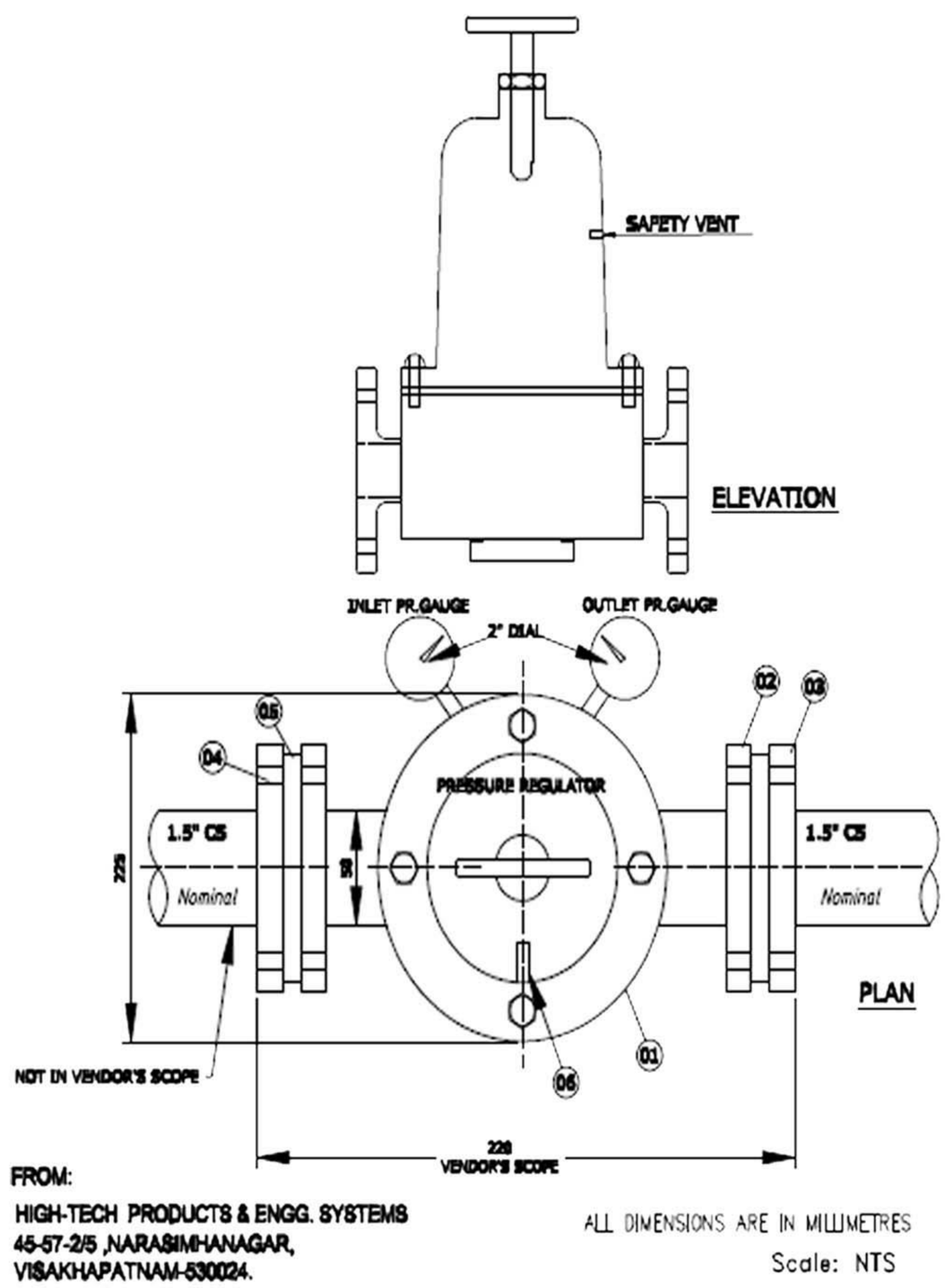

In view of development, we reserve the right to change the equipment/dimension without notice.

An ISO Certified Company

HIGH-TECH PRODUCTS & ENGG SYSTEMS
HIGH-TECH AIR & FLAME PRODUCTS [P] LTD

45-57-2/5, Narasimha Nagar, Visakhapatnam-530 024 India. Tel : +91-891-2798985, Fax : +91-891-2798871 e-mail : high_tech90@yahoo.com, Web : www.high-techindia.com

Trust Series - NRV-200

NON - RETURN VALVE

Safety Device

Trust Series. NRV 200- Non-return valve is a safety device.

Designed to operate automatically to prevent reversal flow in a pipe or fittingfor use with most non-corrosive gases and protect workstations, pipelines and infrastructures.

Gas Services :

- Natural gas,
- LPG
- Hydrogen
- Oxygen
- Compressed air
- Non-flammable gases

Trust Series 909

Flashback Arrestors - Dry Type / Regulator Mounted

Industrial Purpose

Trust Series 900

Fire Preventor, Flame Arresting Device - Torch Mounted

Industrial Purpose

Accessories (Optional) :

1. Hose Pipe for Oxygen
2. Hose Pipe for Acetylene (Fuel Gas)
3. Hose Clips

Nipple Design **Threaded Design**

In view of development, we reserve the right to change the equipment/dimension without notice.

An ISO Certified Company
HIGH-TECH PRODUCTS & ENGG SYSTEMS
HIGH-TECH AIR & FLAME PRODUCTS [P] LTD
45-57-2/5, Narasimha Nagar, Visakhapatnam-530 024 India. Tel : +91-891-2798985, Fax : +91-891-2798871 e-mail : high_tech90@yahoo.com, Web : www.high-techindia.com