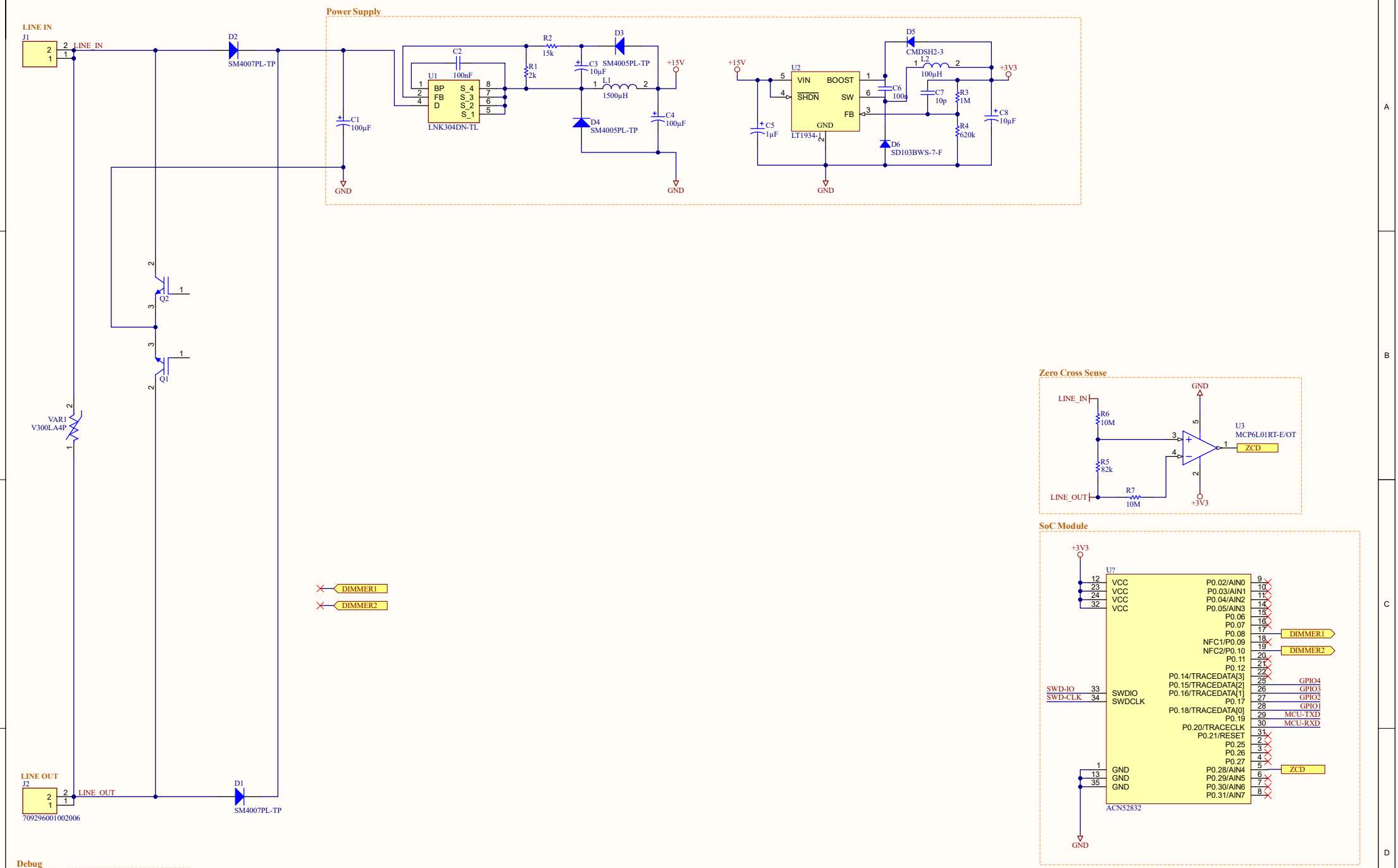
Power Supply
LINE IN
J1
LINE_IN
D2
SM4007PL-TP
C1
100µF
GND
U1
LNK304DN-TL
BP
FB
D
S_4
S_3
S_2
S_1
C2
100nF
R1
2k
R2
15k
D3
SM4005PL-TP
C3
10µF
L1
1500µH
D4
SM4005PL-TP
C4
100µF
+15V
GND
+15V
U2
VIN
BOOST
SHDN
SW
FB
GND
LT1934-1
C5
1µF
C6
100n
D5
CMDSH2-3
L2
100µH
+3V3
C7
10p
R3
1M
R4
620k
D6
SD103BWS-7-F
C8
10µF
GND
Q2
Q1
VAR1
V300LA4P
LINE OUT
J2
LINE_OUT
709296001002006
D1
SM4007PL-TP
DIMMER1
DIMMER2
Zero Cross Sense
LINE_IN
R6
10M
R5
82k
LINE_OUT
R7
10M
GND
U3
MCP6L01RT-E/OT
ZCD
+3V3
SoC Module
+3V3
U?
VCC
VCC
VCC
VCC
SWDIO
SWDCLK
GND
GND
GND
SWD-IO
SWD-CLK
P0.02/AIN0
P0.03/AIN1
P0.04/AIN2
P0.05/AIN3
P0.06
P0.07
P0.08
NFC1/P0.09
NFC2/P0.10
P0.11
P0.12
P0.14/TRACEDATA[3]
P0.15/TRACEDATA[2]
P0.16/TRACEDATA[1]
P0.17
P0.18/TRACEDATA[0]
P0.19
P0.20/TRACECLK
P0.21/RESET
P0.25
P0.26
P0.27
P0.28/AIN4
P0.29/AIN5
P0.30/AIN6
P0.31/AIN7
DIMMER1
DIMMER2
GPIO4
GPIO3
GPIO2
GPIO1
MCU-TXD
MCU-RXD
ZCD
ACN52832
GND
Debug
J3
GND A1
MCU-TXD A2
MCU-RXD A3
SWD-IO A4
SWD-CLK A5
B1 +3V3
B2 GPIO1
B3 GPIO2
B4 GPIO3
B5 GPIO4
10129383-910001ALF
LAST CHANGE: 11/1/2021
REVISION: 1.1
DRAWN BY: Jaap Sontrop
TITLE
Crownstone 2-wire BLE Dimmer
DRAWING
Power Supply, Zero Crossing, SoC
FILE NAME Sheet1.SchDoc
SHEET 1 OF 1