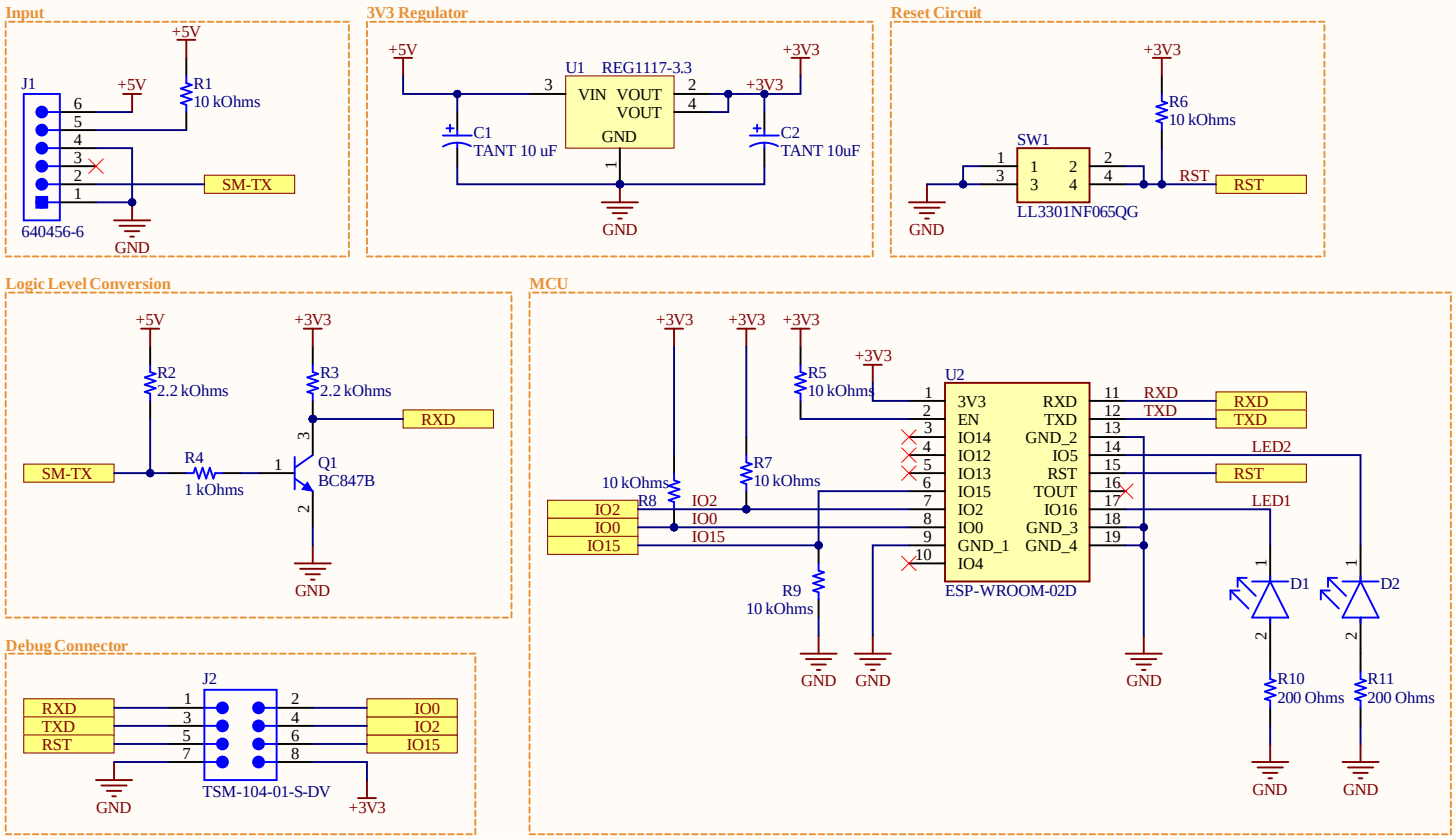


| | | |
|---|---|---|
| LAST CHANGE: 12/3/2021 | REVISION: 1.1 | DRAWN BY: Jaap Sontrop |

TITLE

# CMIDAT01 - ESP DRMR Reader

DRAWING

FILE NAME Schematic.SchDoc

SHEET 1 OF 1