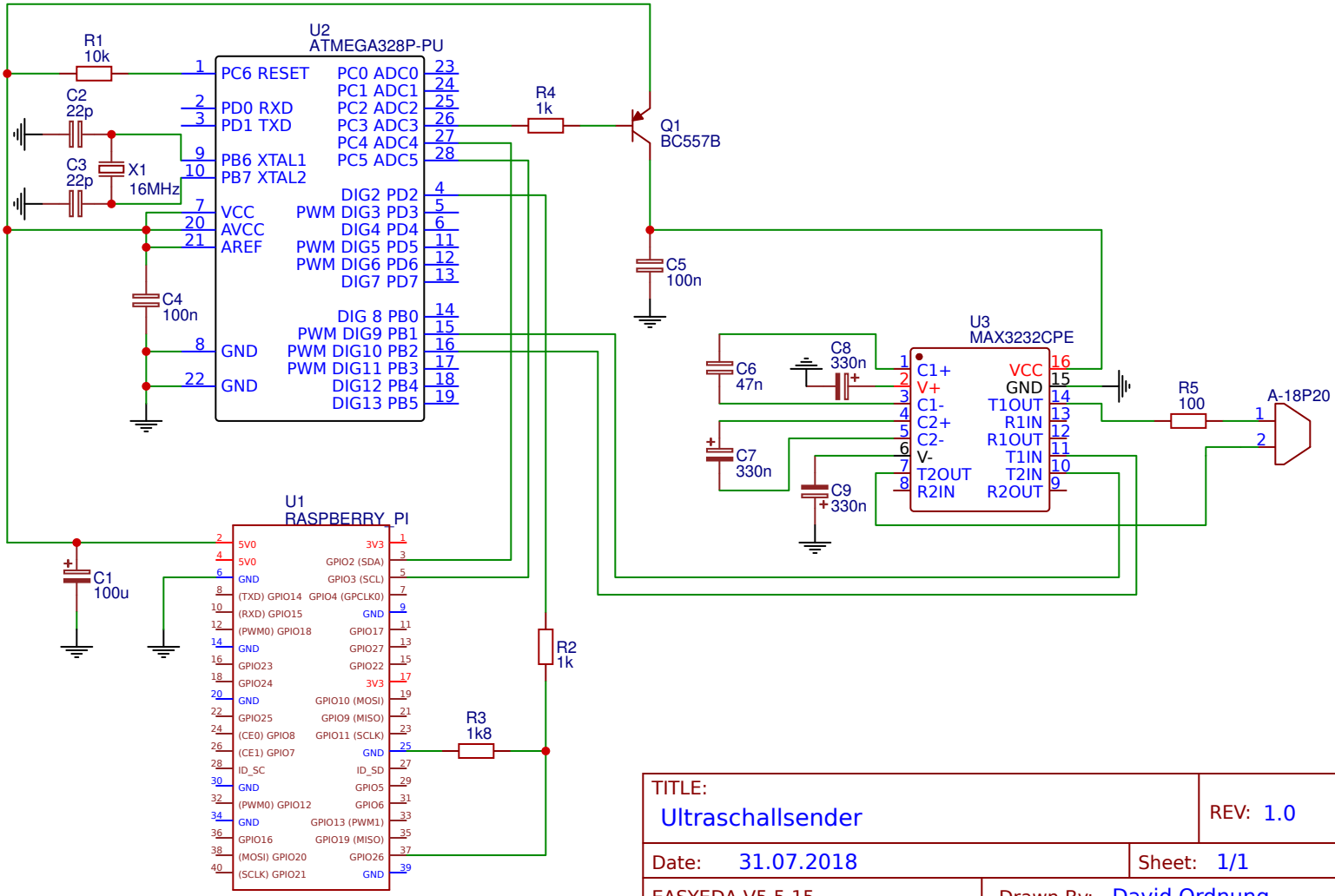
U2
ATMEGA328P-PU
R1
10k
C2
22p
C3
22p
X1
16MHz
C4
100n
R4
1k
Q1
BC557B
C5
100n
U3
MAX3232CPE
C6
47n
C8
330n
C7
330n
C9
330n
R5
100
A-18P20
U1
RASPBERRY_PI
C1
100u
R2
1k
R3
1k8
TITLE:
Ultraschallsender
REV: 1.0
Date: 31.07.2018
Sheet: 1/1
EASYEDA V5.5.15
Drawn By: David Ordnung