SONY授权经销商:深圳市轩展科技有限公司www.volers.cn技术支持:王先生18922813789

1 Cover Page and Summary of Specification

Image sensor (mode:4K2K)	Progressive scan CMOS image sensor 1/2.5type "ExmorR"		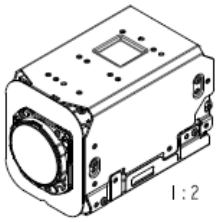 Outline Image
	Number of total pixels (H) x(V)	3864 x 2218, 8.57 [pixels]	
	Number of effective pixels (H) x(V)	3864 x 2202, 8.51M [pixels]	
	Number of recording pixels (H) x(V)	3840 x 2160, 8.29M[pixels]	
Lens	Focal length	4.4 [mm] to 88.0 [mm]	
	Magnification	20[times]	
	Horizontal angle of view	70.2[degree] (Wide) 4.1[degree] (Tele) When Image stabilizer ON: 60[degree] (Wide) 3.5[degree] (Tele)	
	F value	F2.0 (Wide) to F3.8 (Tele)	
Control mechanics	Zoom motor	Stepping motor/ Moving coil linear motor	
	Focus motor	Moving coil linear motor	
	Iris	Galvano	
	IRCF	Stepping motor	
Output mode	[QFHD] QFHD/29.97p,QFHD/25p, QFHD/23.39P [FHD] 1080p/59.94,1080i/59.94,1080p/50,1080i/50.1080p/29.97,1080p/25 1080p/23.98 [HD] 720p/59.94, 720p/50 [SD]480p/59.94,576p/50		
Synchronized Codes	[QFHD]		Comparable to CEA861-F
	[FHD] Progressive		Comparable to CEA861-D
	[HD] Interlace		Comparable to CEA861-D
I/O pins	Image signal Output		Compliant with HDMI(2160p,1080p,1080i,720p)
	Control signal I/O		VISCA protocol (CMOS 3.1 [V]),USB PTP
Power, others	Power supply		DC 6.0 [V] to DC 12.0 [V]
	Power consumption		3W (Typ. DC IN 6-12V, steady state)
	Storage temperature		-20 to +60 [°C] / 20 [%] to 95 [%] Absolute humidity: 36 [g/m3]
	Operating temperature		-5 to +60 [°C] / 20 [%] to 80 [%] Absolute humidity: 36 [g/m3]
	Package dimensions (W) x (H) x (D)		50.0 [mm] x60.0 [mm] x 93.3 [mm]
	Package mass		Approx. 275[g]

SONY授权经销商:深圳市轩展科技有限公司www.volers.cn技术支持:王先生18922813789

Sony reserves the absolute right to change products and specifications without prior notice. This information does not convey any license by any implication or otherwise under any patents or other right. Application circuits shown, if any, are typical examples illustrating the operation of the devices. Sony cannot assume responsibility for any problems arising out of the use of these circuits. Once a customer's purchase order is formally accepted in writing by Sony, both the customer and Sony agree that all specifications in place at that time as indicated by the current version of this document are both applicable and accepted for the products.

SONY授权经销商:深圳市轩展科技有限公司www.volers.cn技术支持:王先生18922813789

2 Function

Exposure	Full Auto、Gain Limit、Shutter Priority、Iris Priority、Gain、Manual、Bright
White Balance	AUTO、ATW、Indoor、Outdoor、One Push WB、Manual WB、Outdoor Auto、Sodium Vapor Lamp（Fix/Auto/Outdoor Auto）
Focus	Auto Focus、Manual Focus Mode、One Push Trigger Mode、Near Limit
Visibility Enhancer	Yes
Noise Reduction（2D/3D）	Yes
ICR (Day and Night)	Yes
Image Stabilizer	Yes
Slow AE	Yes
High Sensitivity	Yes
Gamma	Yes
Digital Zoom	12x
Super resolution zoom	[QFHD] 1.5x [FHD][HD] 2.0x
Character Gen.	Yes
Defog	Yes
Picture Effect	Yes
Spherical Privacy Zone Masking	Yes
E-Flip	Yes
External synchronization function	No

SONY授权经销商:深圳市轩展科技有限公司www.volers.cn技术支持:王先生18922813789

3 Connection specification

3.1 Connector and Pin Assignment

Connector(CN1701)

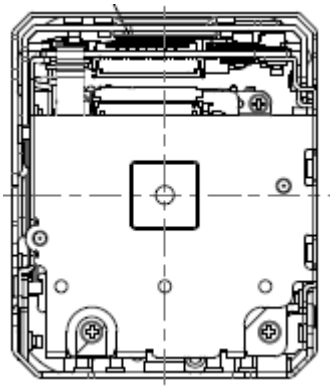

CN1701

Kel.Co. USL00-30L-C

Pin No.	Name	Level	Remark
1	GND		DataShield
2	TMDS Clock-		HDMI_CLOCK-
3	TMDS Clock+		HDMI_CLOCK+
4	GND		DataShield
5	TMDS Data 0-		HDMI_DATA0-
6	TMDS Data 0+		HDMI_DATA0+
7	GND		DataShield
8	TMDS Data 1-		HDMI_DATA1-
9	TMDS Data 1+		HDMI_DATA1+
10	GND		DataShield
11	TMDS Data 2-		HDMI_DATA2-
12	TMDS Data 2+		HDMI_DATA2+
13	GND		DataShield
14	NC		
15	NC		
16	NC		
17	Hot Plug Detect		HDMI_Hot Plug Detect
18	+5V Power		HDMI_5V
19	USB_VBUS		USB2.0
20	GND		
21	USB_D-		USB2.0
22	USB_D+		USB2.0
23	GND		
24	VISCA_RxD		VISCA
25	VISCA_TxD		VISCA
26	RESET		
27	DC_IN	6 to12[V] DC	
28	DC_IN	6 to12[V] DC	
29	DC_IN	6 to12[V] DC	
30	DC_IN	6 to12[V] DC	

SONY授权经销商:深圳市轩展科技有限公司www.volers.cn技术支持:王先生18922813789

3.2 HDMI PIXEL DATA FORMAT

Compliant with HDMI(2160p,1080p,1080i,720p)

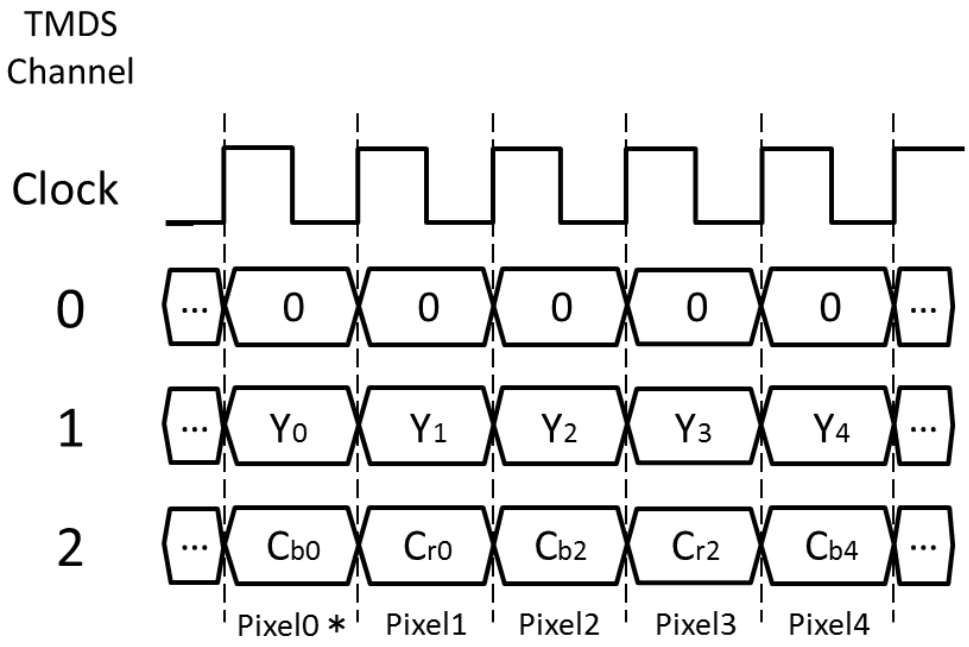

* Each pixel period includes 10bit data that is encoded from 8bit pixel data by HDMI standard.

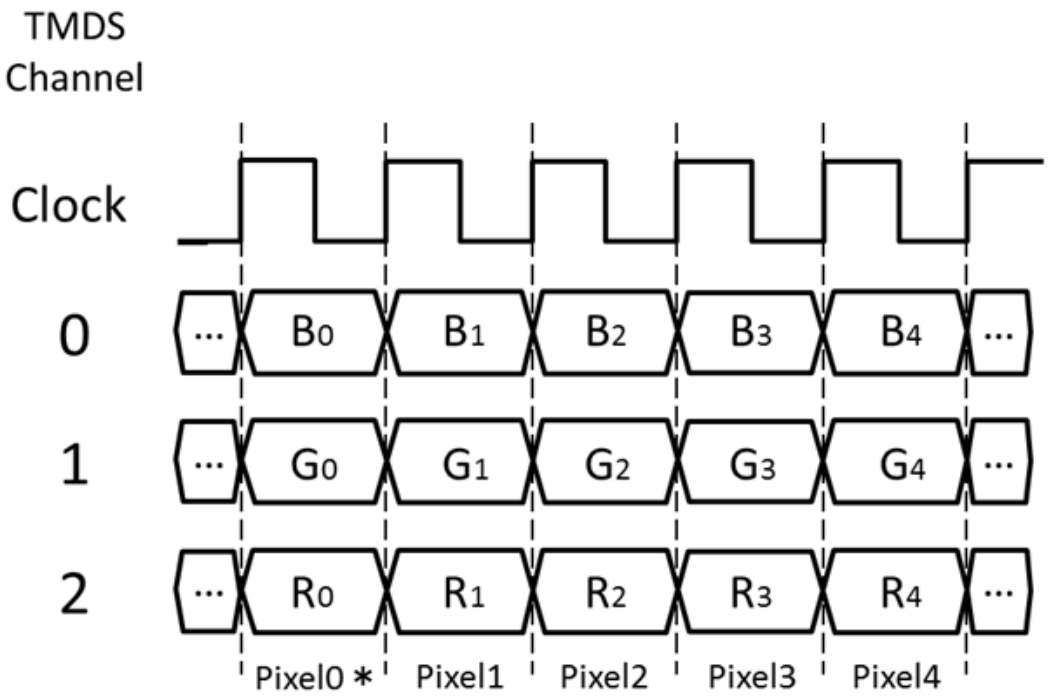

* Each pixel period includes 10bit data that is encoded from 8bit pixel data by HDMI standard.

SONY授权经销商:深圳市轩展科技有限公司www.volers.cn技术支持:王先生18922813789

Output Format	Clock[Hz]
2160p/29.97	296.703M
1080p/59.94	148.352M
1080i/59.94	74.176M
720p/59.94	74.176M
480p/59.94	27M
2160p/25	297M
1080p/50	148.5M
1080i/50	74.25M
720p/50	74.25M

SONY授权经销商:深圳市轩展科技有限公司www.volers.cn技术支持:王先生18922813789

4 Detailed Specifications

4.1 Sensor Specifications

Image sensor	Progressive scan CMOS image sensor
Chip size (H) x (V)	8.365 [mm] x 6.615 [mm] (Type 1/2.5)
Unit cell size (H) x (V)	1.62 [um] x 1.62 [um]
Number of total pixels (H) x (V)	3864x2218 8.57 M [pixels]
Number of effective pixels (H) x (V)	3864x2196 (4:3) 8.49 M [pixels]
Scan method	Progressive scan
Color filter	Primary color Bayer arrangement
Shutter	Rolling shutter (NOT Global shutter)

Spectral Sensitivity Characteristic

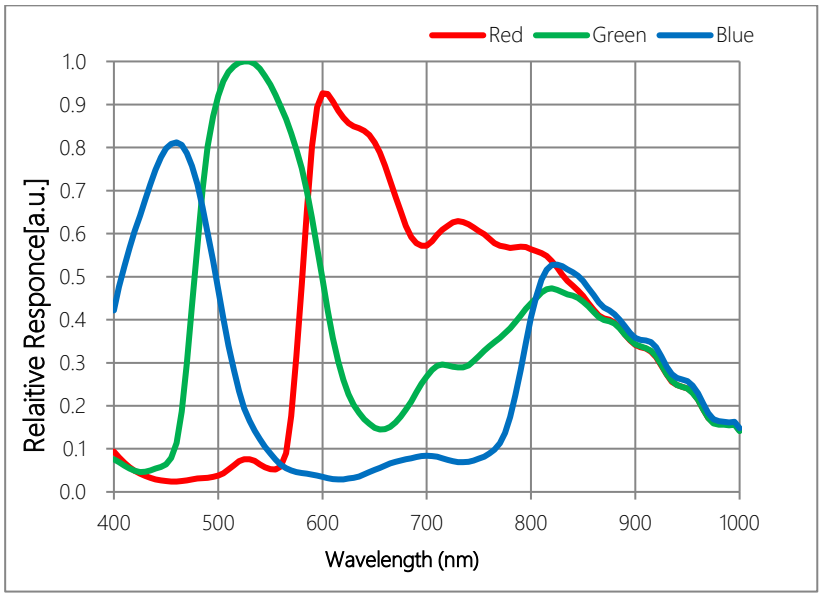

4.2 Lens Specifications (*Design Specifications)

Configuration		10 groups, 13 elements
Angle of view	Horizontal	70.2[degrees] *(Wide) 4.1[degrees] (Tele)
	Vertical	43.1[degrees] *(Wide) 2.3[degrees] *(Tele)
	Diagonal	77.8[degrees] *(Wide) 4.7 [degrees] *(Tele)
F number		2.0(Wide) to 3.8 (Tele)
Focal length (35 [mm] converted)		4.4 [mm] to 88.4 [mm] (27 [mm] to 540 [mm])
TV distortion		-9.9 [%] (Wide) / +1.77 [%] (Tele)
Focal range		10 [mm] to infinity (Wide) 800 [mm] to infinity (Tele)

Note) * The above values of field of view are calculated based on the maximum recording pixel area of image sensor.They differ from the ones on 2D outline drawing, which are calculated based on the

SONY授权经销商:深圳市轩展科技有限公司www.volers.cn技术支持:王先生18922813789

effective pixel area of image sensor and include the margin for the assembly tolerance.

4.3 Camera specifications

- **Minimum Illumination**

  50 [IRE], ICR OFF, IRIS OPEN, AGC MAX(33[dB] Hi Sens Off)

  Typ.value

QFHD Mode	30[fps] mode
Hi Sens Off	1.6[lx]
Hi Sens ON	0.4[lx]

- **White Balance**

  AWB (Auto White Balance) mode 2500[k]- 7500[k]

  ATW (Auto Tracing White Balance) mode 2000[k]- 10000[k]

- **Camera Horizontal Level**

  When setting up the camera and object horizontally, screen should be ±3 [°] of the horizontal line of the monitor.

- **Optical Axis Gap**

  When zooming from Tele end to Wide end, the gap of screen center object on Tele end is in radius circle of 2% or less of short side of monitor screen.

- **Image Vibration**

  When zooming from Tele end to Wide end, the gap of screen center is 2.0[mm] or less on 21[inch] monitor

- **Dirt and Scratch Specifications**

  No denser than density sample

  [Conditions]

  1. Zoom: Wide end, Focus: ∞
  2. Aperture: F4 fixed
  3. Light viewer (818nit 3200K)

  Image on full screen

  1. Density sample: LEE FILTERS 130 CLEAR

- **Resolution (Center)**

  WIDE : 1600[TV lines] or more

- **TV Distortion (Distortion Correct ON)**

  ±3[%]

SONY授权经销商:深圳市轩展科技有限公司www.volers.cn技术支持:王先生18922813789

4.4 Absolute Maximum supply voltage

Item	Signal	Min.	Typ.	Max.	Unit
Supply voltage	DC IN※	-0.3	-	16	[V]

※FCB input terminal part

4.5 Operating Conditions

Item	Signal	Min.	Typ.	Max.	Unit
Supply voltage	DC IN※	6.0	9.0	12.0	[V]

※FCB input terminal part

4.6 Power Consumption

(Measured conditions: Room temperature, typical voltage, high speed frame rate mode as stable operation)

Item	Signal	Ave（※1）	Max（※2）	Unit
Power Supply	VDD 6.0 [V]	3	4.0	[W]
	VDD 9.0 [V]	3	4.0	
	VDD 12.0 [V]	3.1	4.0	

※1 : steady state

※2 : during motor operation(Lens Actuators),but ICR Off

4.7 Lens Durability

(At Room temperature)

ZOOM 1,000,000[Wide-Tele cycles]

FOCUS 2,000,000[Near-∞ cycles]

Iris 500,000[Open-Close cycles]

IR motor 30,000[On-Off cycles]

SONY授权经销商:深圳市轩展科技有限公司www.volers.cn技术支持:王先生18922813789

5 Electrical Characteristics

5.1 AC Characteristics

Compliant with HDMI(2160p , 1080p , 1080i , 720p)

5.2 VISCA (CMOS (3.1V))

RxD	High : 2.3 [V] or more	Low: 0.7 [V] or less
TxD	High : 2.7 [V] or more	Low: 0.4 [V] or less

5.3 MTBF

Approx. 7 [years] (without LENS)

5.4 Environmental Test (Under the Condition of 10 Cartons)

Drop test : Test sequence and drop height (Each 1 times total 11 times)

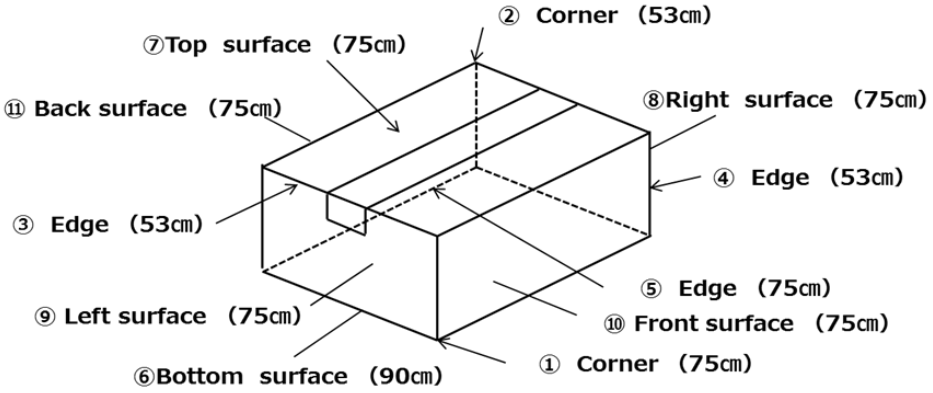

5.5 Power Supply Condition

8[msec] or less

SONY授权经销商:深圳市轩展科技有限公司www.volers.cn技术支持:王先生18922813789

6 Handling Precautions

6.1 Operating Temperature

Make sure that the temperature inside the equipment does not exceed the recommended operating temperature

6.2 Durability of the Image Sensor

The on-chip color filter of the sensor may be decolorized if a large amount of light enters into the sensor. Such conditions of use should be avoided as no product warranty is given for de-colorization. Be sure to take protective measurements against continuous exposure to intense light.

6.3 ESD Protection

Anti-ESD measures should be taken for this camera module in the same manner as semiconductor devices.

(1) Either handle bare handed or use non-chargeable gloves, cloth or material. Also use conductive shoes.
(2) When handling directly use a wrist strap.
(3) Install grounded conductive mats on the floor and working table to prevent the generation of static electricity.
(4) Discharge using ionized air or other means is recommended when handling this camera module.

6.4 Storage and Operating Environment

Avoid storage or use under high temperature, high humidity and dusty conditions.

6.5 Mechanical Strength

This camera module is a precision optical part, so care should be taken not to apply excessive mechanical shock or force.

6.6 Remodeling

Any remodeling or process at customers should be avoided. No product warranty will be granted if the product is once remodeled or processed.

SONY授权经销商:深圳市轩展科技有限公司www.volers.cn技术支持:王先生18922813789

6.7 NAND FLASH

The data in the NAND FLASH should not be modified or overwritten. Once they are modified or overwritten, no product warranty may be able to be given.

6.8 White Pixels

The image-sensing device is vulnerable to natural radiation such as cosmic radiation that may cause incidental defect resulting in white pixel. Although these white pixels are corrected during the final inspection and adjustment process of the camera module production, a minor number of the product might be affected during the storage and shipment, and “white pixel” may appear on incoming stage at customer production site. As the occurrence of white pixels is due to natural behavior, it’s beyond supplier’s control.

6.9 Vertical line noise in low light condition

Rarely a vertical line noise may happen in the case when a gain sets up in the low light condition. It’s not a malfunction but the characteristic of CMOS Image Sensor

6.10 Safety Standards

This product is manufactured as an unfinished product and no particular safety standard is applicable to this product alone. Users should ensure that finished products using this camera module conform to applicable safety standards.

6.11 Location of Use and Storage

Do not shoot extremely bright objects (lights or sun) for long hours.

In addition, please refrain from using or storing at the following locations.

- Extremely hot or cold place (Operating temperature: -5˚C to +60˚C(23°F to 140°F))
- Near TV/radio station which produces intense radio emission
- The place where is affected by reflects of fluorescent light or light from windows
- Under unstable illumination (Flickers will be generated)
- Place with intense vibration
- Where it is subject to radiation from laser beams

SONY授权经销商:深圳市轩展科技有限公司www.volers.cn技术支持:王先生18922813789

6.12 When using in outdoor camera

- The outdoor camera should install inside direct lightning protection zone. Lightning rod is mandatory for camera install outside direct lightning protection zone.
- Surging protector for power supply and signal port must install for outdoor camera. The distance between surging protector and camera should not longer than 0.5m.
- Shielded cable for power supply and signal should be use for outdoor equipment. The cable should lay inside iron conduit. The conduit should be well grounded.
- Cable should lay under the eaves for outdoor engineering, Aerial cable is prohibited.
- The design of ground for outdoor equipment and cable should combine with ground of building and conform to national and industry standard.
- The ground resistance must not exceed 4Ω when use independent ground. The area of ground cable must exceed 25mm^2

6.13 Notes on incorporating a camera

When incorporating a camera on a device that turns ON/OFF 3 times or more a day on average, please
release heat so that the temperature rise in the set will not exceed 12 °C by reading the temperature sensor.

SONY授权经销商:深圳市轩展科技有限公司www.volers.cn技术支持:王先生18922813789

7 Package Outline

Dimensions

Front

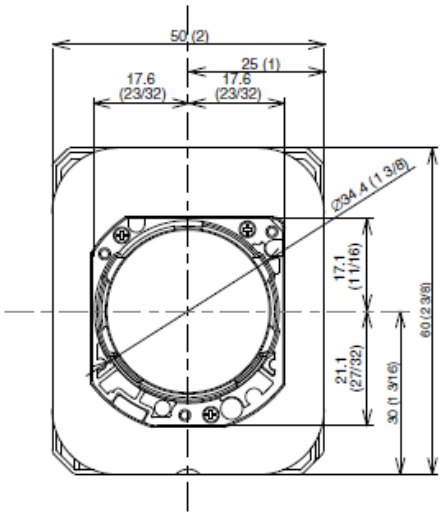

Back

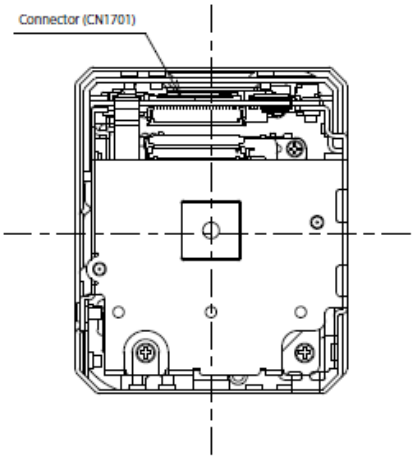

Top

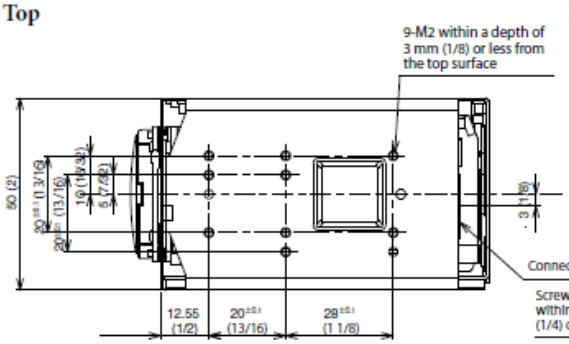

Bottom

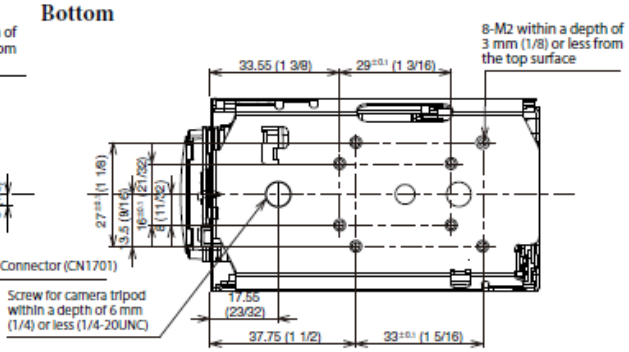

Left side

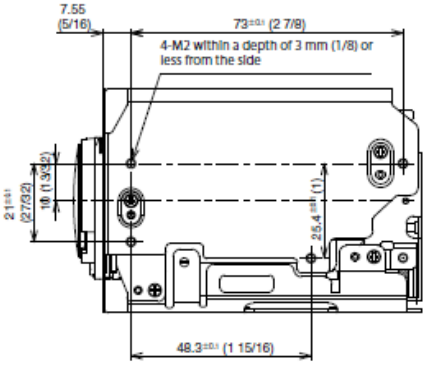

Right side

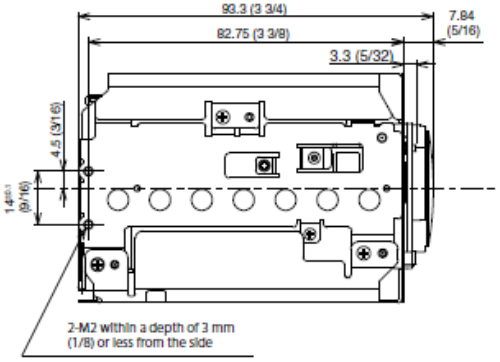

SONY授权经销商:深圳市轩展科技有限公司www.volers.cn技术支持:王先生18922813789

8 Package Specification

(Unit: mm)

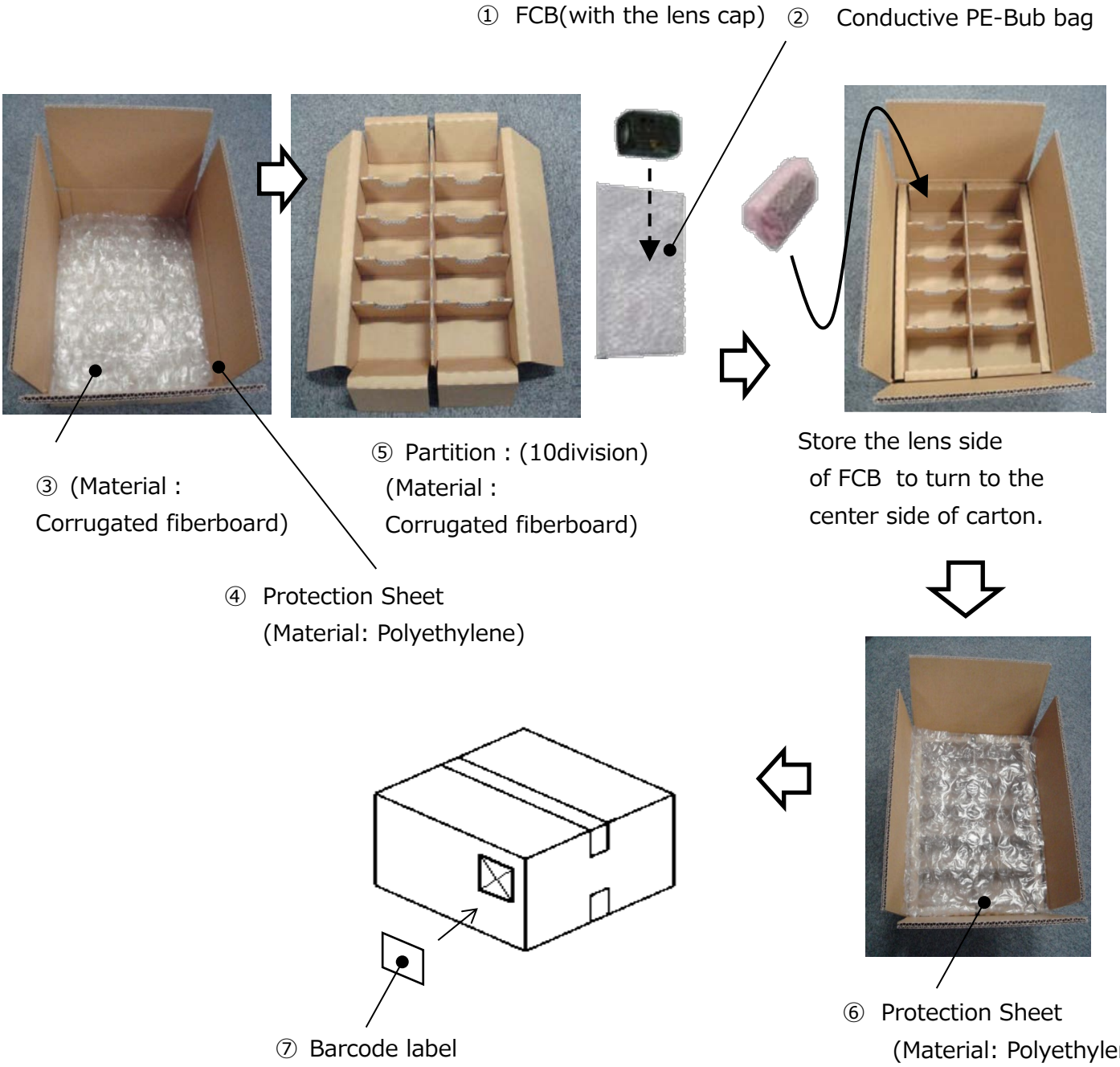

Outside dimensions : 405 x 300 x 138 ((L) x (W) x (H))

SONY授权经销商:深圳市轩展科技有限公司www.volers.cn技术支持:王先生18922813789

Revision History

Version	Date	Page	Description
V1.0	20180530		release
V1.1	20180607	8	Correction of errors “Aperture: F4”
V1.2	20180702	3	Deleate **Function** “Color Enhancement”
V1.3	20190726	10	Added “(without LENS)”
V1.3	20190726	1	Correction of errors “4.4 [mm] to 88.0 [mm]”