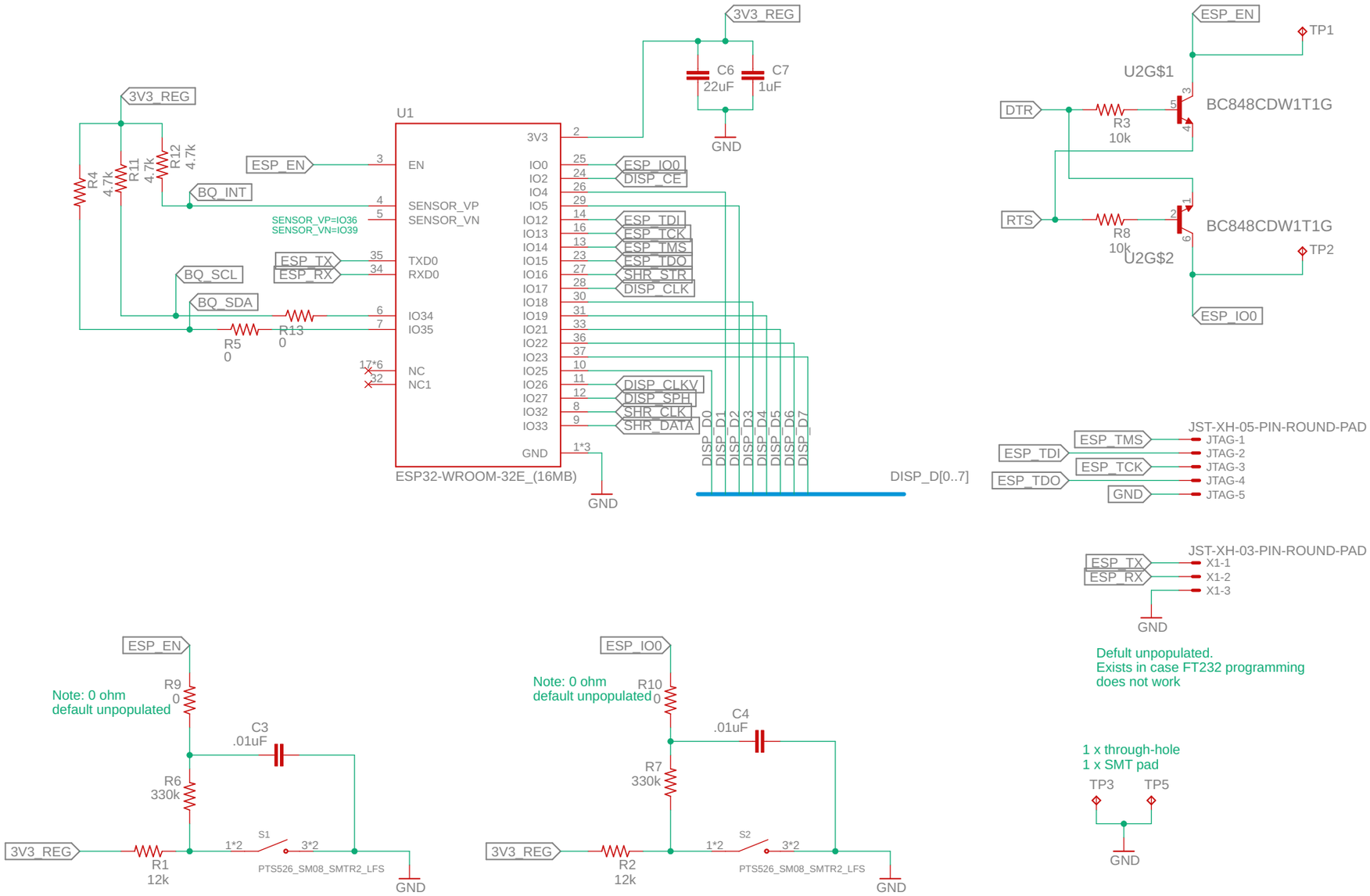
3V3_REG
C6
22uF
C7
1uF
GND
U1
ESP_EN
BQ_INT
SENSOR_VP=IO36
SENSOR_VN=IO39
ESP_TX
ESP_RX
BQ_SCL
BQ_SDA
R4
4.7k
R11
4.7k
R12
4.7k
R5
0
R13
0
EN
SENSOR_VP
SENSOR_VN
TXD0
RXD0
IO34
IO35
NC
NC1
3V3
IO0
IO2
IO4
IO5
IO12
IO13
IO14
IO15
IO16
IO17
IO18
IO19
IO21
IO22
IO23
IO25
IO26
IO27
IO32
IO33
GND
ESP_IO0
DISP_CE
ESP_TDI
ESP_TCK
ESP_TMS
ESP_TDO
SHR_STR
DISP_CLK
DISP_CLKV
DISP_SPH
SHR_CLK
SHR_DATA
DISP_D0
DISP_D1
DISP_D2
DISP_D3
DISP_D4
DISP_D5
DISP_D6
DISP_D7
DISP_D[0..7]
ESP32-WROOM-32E_(16MB)
ESP_EN
TP1
U2G$1
DTR
R3
10k
BC848CDW1T1G
RTS
R8
10k
U2G$2
BC848CDW1T1G
TP2
ESP_IO0
JST-XH-05-PIN-ROUND-PAD
ESP_TMS
ESP_TDI
ESP_TCK
ESP_TDO
GND
JTAG-1
JTAG-2
JTAG-3
JTAG-4
JTAG-5
JST-XH-03-PIN-ROUND-PAD
ESP_TX
ESP_RX
X1-1
X1-2
X1-3
GND
Defult unpopulated.
Exists in case FT232 programming
does not work
ESP_EN
Note: 0 ohm
default unpopulated
R9
0
C3
.01uF
R6
330k
3V3_REG
R1
12k
S1
PTS526_SM08_SMTR2_LFS
GND
ESP_IO0
Note: 0 ohm
default unpopulated
R10
0
C4
.01uF
R7
330k
3V3_REG
R2
12k
S2
PTS526_SM08_SMTR2_LFS
GND
1 x through-hole
1 x SMT pad
TP3
TP5
GND