Design and Simulation of DC-DC Converters

Shafinaz A. Lopa[1], S. Hossain[2], M. K. Hasan[3], T. K. Chakraborty[4]

[1] B. Sc Engineer in EEE, Department of ECE, Presidency University, Dhaka, Bangladesh
[2] Senior Scientific Officer, Institute of Nuclear Science & Technology, Bangladesh Atomic Energy Commission, Dhaka, Bangladesh
[3] Senior Lecturer, Department of Physics, Trust College, Dhaka, Bangladesh
[4] Professor, Department of ECE, Presidency University, Dhaka, Bangladesh

---

Abstract – ***This research paper focuses especially the design and simulation of dc-dc converters. It contains the theoretical derivations and parameters equations with design and examples. Simulation results for buck, boost and buck-boost converters are shown with the chance of different input parameters. In this work we have analyzed the equation of a buck, boost and buck-boost converters and proposed the design components and simulation of these converters. Changing the input parameters like inductance, capacitance and switching frequency in order to observe the changes in output voltage has been added with simulation graph. These parameters and their equations should be well understood before designing buck or boost or buck-boost converters. Simulation procedures in Orcad are also added in this paper. We have achieved performance parameter equations for these three regulators. It was completed the design and investigation of these three converters through mathematical examples and have generated the circuits for simulating buck, boost and buck boost converters. And also have attained different output voltage curve with the change of input parameters. The output graphs for all the converters are well fitted.***

Key Words: *Converters, Simulation, Orcad, PSpice, Power Regulator, Switching Matrix.*

1. INTRODUCTION

For the control of electric power or power conditioning, the conversion of electric power from one form to another is necessary and the switching characteristics of the power devices permit these conversions [1]. The static power converters perform these functions of power conversions [2]. A converter may be considered as a switching matrix.

As the portable electronics industry progressed over the years, different requirements evolved such as increased the battery lifetime, small and cheap systems, brighter, full color displays and a demand for increased talk time in cellular phones. A continually increasing demand from power systems has placed power consumption at a premium. To carry on with these demands engineers have worked towards developing efficient conversion techniques and also have resulted in the subsequent formal growth of an interdisciplinary field of Power Electronics. However it comes as no surprise that this new field has offered challenges owing to the unique combination of two major disciplines of electrical engineering: electronics and power.

Commonly speaking the use of a swift or switches for the rationale of power conversion can be regarded as an SMPS (Switch Mode Power Supply). A dc-dc converter can be considered as dc equivalent to an ac transformer with a continuously variable turn's ratio [3].

1.1 Application of DC-DC Converters

In many industrial applications, it is required to convert a fixed-voltage dc source into a variable-voltage dc source. A dc-dc converter converts directly from dc to dc and is simply known as a dc converter [4]. A dc converter can be considered as dc equivalent to an ac transformer with a continuously turns ratio. Like a transformer, it can be used to step down or step up a dc voltage source.

The dc-dc converters are widely used for traction motor control in electronic automobiles, trolley cars, marine hoists, forklift trucks, and mine haulers. They provide smooth acceleration control, high efficiency, and fast dynamic response. DC-DC converters can be used in regenerative braking of dc motors to return energy back into the supply, than this feature results in energy savings for transportation systems with frequent stops [5]. DC converters are used in dc voltage regulators and also are

used in conjunction with an inductor, to generate a dc current source, especially for the current source inverter.

1.2 Different Topologies

The dc converters can be used as switching mode regulators to convert a dc voltage, usually unregulated, to a regulated dc output voltage. The regulation is normally achieved by PWM at a fixed frequency and the switching driver is normally BJT, MOSFET, or IGBT.
The power regulator can be inductor based, switch-mode power converter, a switch capacitor charge pump or a linear regulator. Each regulator has its own advantages and disadvantages, but it is the particular application requirements that determine which type of power regulator is best suited.

There are four topologies of switching-mode regulators:

- Buck regulator
- Boost regulator
- Buck-boost regulator
- Cuk regulator

This thesis paper focuses especially on buck, boost and buck-boost regulator topologies. The boost is one of the fundamental switch-mode power topologies. The other being is the buck regulator. From these two topologies, all other topologies switch-mode power supply topologies are derived.

2. THEORETICAL BACKGROUND

2.1 Buck Converter

A buck converter is a step down dc-dc converter consisting primarily of inductor and two switches (generally a transistor switch and diode) for controlling inductor. It fluctuates between connection of induction to source voltage to mount up energy in inductor and then discharging the inductor's energy to the load [6].

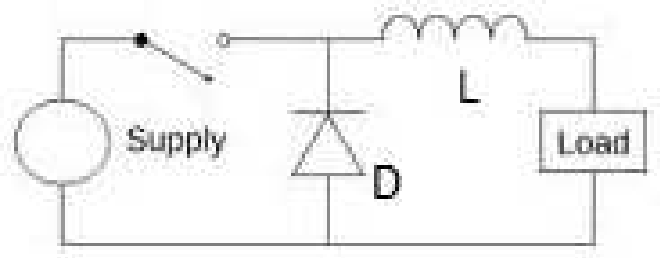

Figure 1: Basic buck circuit.

When the switch pictured above is closed (i.e., On-state), the voltage across the inductor is $V_L = V_i - V_o$. The current flowing through inductor linearly rises. The diode doesn't allow current to flow through it, since it is reverse-biased by voltage.

For Off case (i.e., when switch pictured above is opened), diode is forward biased and voltage is $V_L = -V_o$ (neglecting drop across diode) across inductor. The inductor current which was rising in ON case now decreases.

2.1.1 Ideal circuit analysis

In a buck converter, the average output V_a is less than the input voltage, V_s. The circuit diagram of a buck regulator has shown below and this is like a step-down converter.

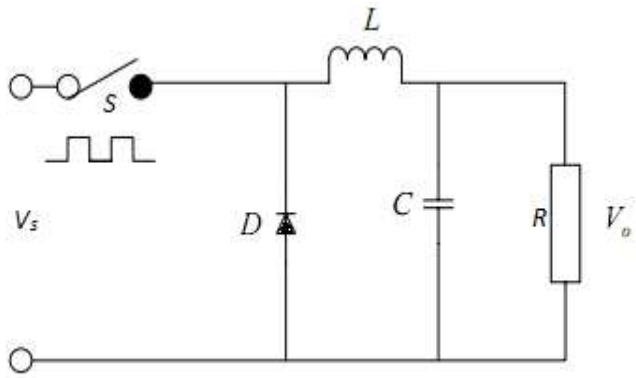

Figure 2: Circuit diagram of an ideal buck regulator.

The freewheeling diode D conducts due to energy stored in the inductor; and the inductor current continues to flow through inductor (L), capacitor (C), load and diode (D). The inductor current falls until transistor S is switched on again in the next cycle.

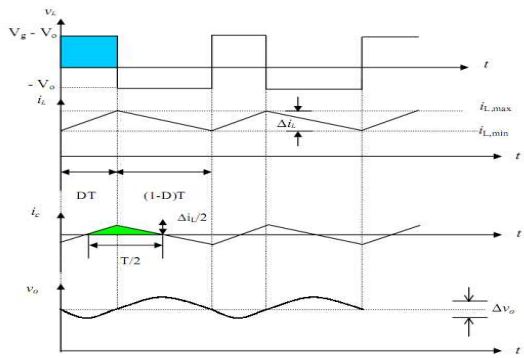

Figure 3: Waveforms of voltage and current of buck converter.

The waveforms for voltage and current are shown in for continuous load current assuming that the current rises or falls linearly.

For a constant current flow in the inductor *L*, it is assumed that the current rises and falls linearly. In practical circuits, the switch has a finite, nonlinear resistance. Its effect can generally be negligible in the most applications depending on the switching frequency, filter inductance, and capacitance, the inductor current could be discontinuous.

2.2 Boost Converter

A boost converter (step-up converter), as its name suggest step up the input DC voltage value and provides at output. This converter contains mostly a diode, a transistor as switches and at least one energy storage element. Capacitors are usually added to output so as to perform the function of removing output voltage ripple and sometimes inductors are also combined with [7].

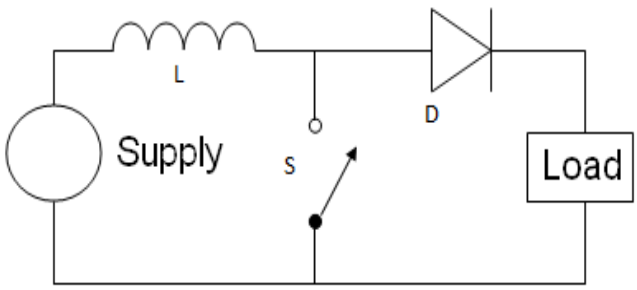

Figure 4: Basic boost circuit.

Its operation is generally of two separate states,

- During the ON period, switch is made to close its contacts which results in increase of inductor current.
- During the OFF period, switch is made to open and thus the only path for inductor current to flow through the fly-back diode '*D*' and the parallel combination of capacitor and load. This enables capacitor to transfer energy gained by it during ON period.

2.2.1 Ideal Circuit Analysis

In a boost regulator the output voltage is larger than the input voltage hence the name 'boost'. A boost regulator using a power MOSFET is shown in figure.

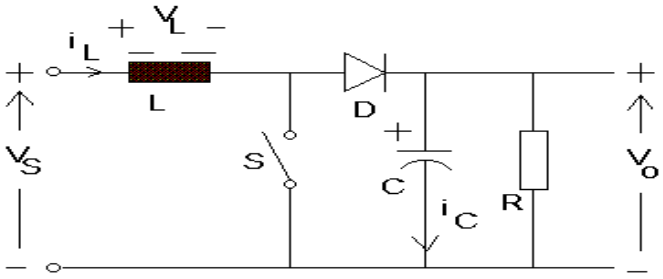

Figure 5: Circuit diagram of an ideal boost regulator.

2.3 Buck-boost Converter

A buck-boost converter provides an output voltage that may be less than or greater than the input voltage hence the name "buck-boost"; the output voltage polarity is opposite to that of the input voltage. This converter is also known as inverting regulator [8]. The circuit arrangement of a buck-boost converter is shown is figure 6.

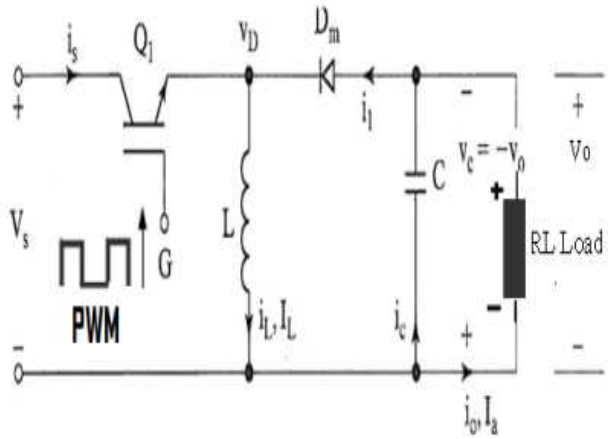

Figure 6: Circuit diagram of buck-boost converter.

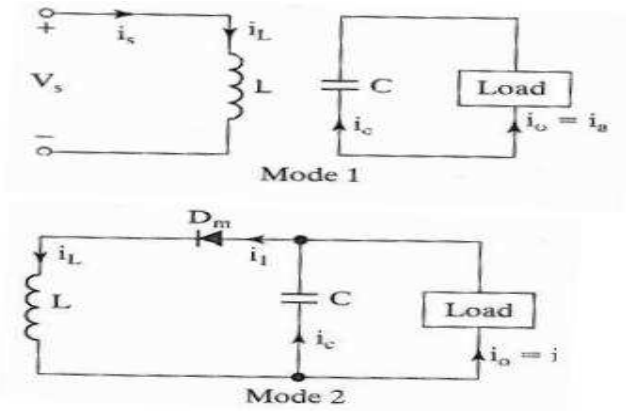

Figure 7: Equivalent circuit of buck-boost converter.

The circuit operation divided into two modes. During mode 1, transistor Q_1 is turned on and the diode D_m is reversed biased. The input current, which rises, flows through inductor L and transistor Q_1. During mode 2, transistor Q_1 is switched off and the current, which was flowing through inductor L, would flow through L, C, D_m, and the load. The energy stored in inductor L would be transferred to the load and inductor current would fall until transistor Q_1 is switched on again in the next cycle. The equivalent circuits for the modes are shown in figure 7. The waveforms for steady-state voltages and currents of the buck-boost regulator are shown in figure 8 for a continuous load current.

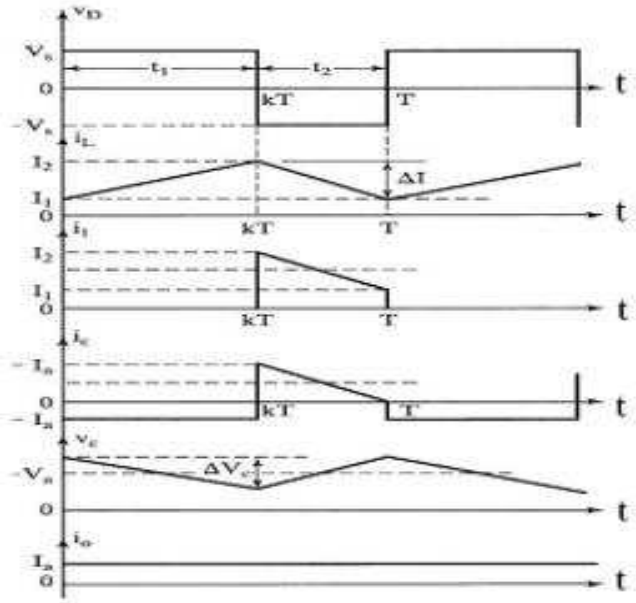

Figure 8: Waveforms of buck-boost converter.

3. DESIGN ANALYSIS OF DC-DC CONVERTERS

3.1 Performance Parameters

There are quantities of vital performance parameters which decide the output characteristics of the dc-dc converters. These parameters should be well understood before designing an ideal dc-dc converter.

3.1.1 Operating frequency

The operating frequency determines the performance of the switch. Switching frequency selection is normally determined by efficiency requirements. There is now a rising trend in research work and new power supply designs in increasing the switching frequencies. The higher is the switching frequency, the smaller the physical size and component value.

At higher frequencies the switching losses in the MOSFET increase, and therefore reduce the overall efficiency of the circuit.

At lower frequencies the required output capacitance and inductor size increases, and the volumetric efficiency of the supply degrades.

The trade-off between size and efficiency has to be evaluated very carefully.

3.1.2 Inductor Selection

The role of the inductor is to limit the current slew rate (limit the current in rush) through the power switch when the circuit is ON. The current through the inductor cannot change abruptly. When the current through an inductor trends to fall, it tends to sustain the current by acting as a source. This limits the otherwise high peak current that would be limited by the resistance alone.

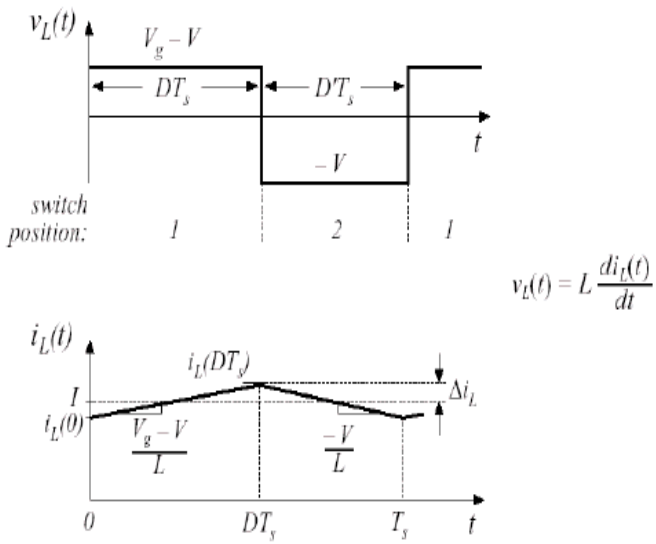

Figure 9: The waveform of the inductor current.

The key advantage is when the inductor is used to drop voltage, it stores energy. Also the inductor controls the percent of the ripple and determines whether or not the circuit is operating in the continuous mode.

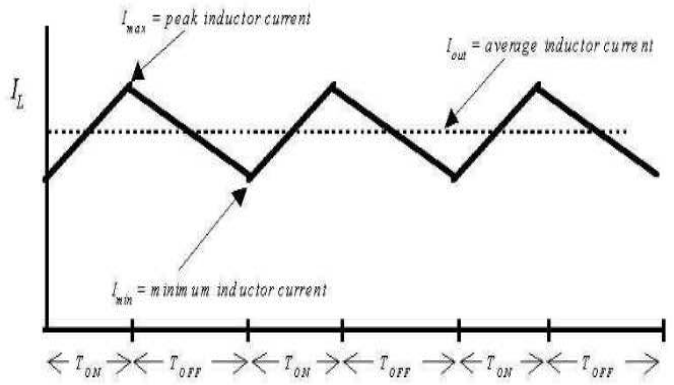

Figure 10: Continuous mode of operation.

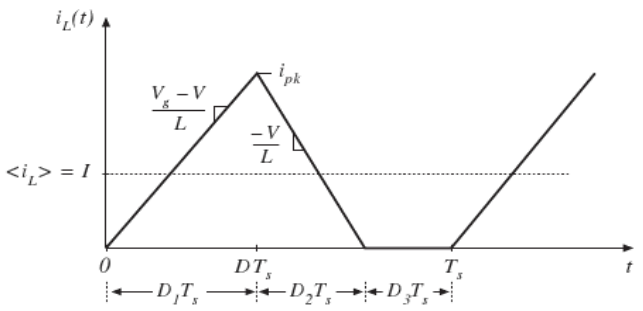

Figure 11: Discontinuous mode of operation.

Peak current through the inductor determines the inductor's required saturation current rating, which is turn dictates the approximate size of the inductor.

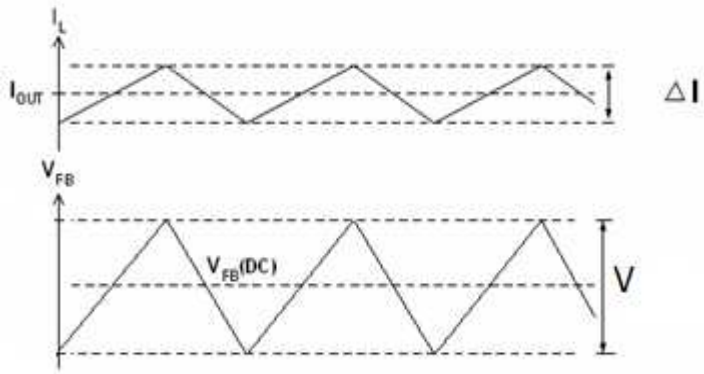

Figure 12: Output voltage ripple of inductor.

Saturating the inductor core decreases the converter efficiency, while increasing the temperature of the inductor, the MOSFET and diode. The size of inductor and capacitor can be reduced by the implementation of high switching frequency, multi-phase interleaved topology, and a fast hysteric controller.

A smaller inductor value enables a faster transient response; it also results in larger current ripple, which causes higher conductor losses in the switches, inductor, and parasitic resistances. The smaller inductor also requires a larger filter capacitor to decrease the output voltage ripple.

Critical value of inductor L_c, for buck converter

$$L_c = L = \frac{(1-k)R}{2f} \tag{3.1}$$

For Boost converter $L_c = L = \frac{k(1-k)^2 R}{2f}$ (3.2)

Critical inductance L_c is the minimum value of the inductor for a given *k, f and R* before the converter enter the discontinuous conduction mode (dcm) of operation.

3.1.3 Capacitor Selection

The primary criterion for selecting the output filter capacitor is its capacitance and equivalent series resistance, ESR. Since the capacitor's ESR affects the efficiency, low ESR capacitors will be used for best performance.

For reducing ESR, it is also possible to connect few capacitors in parallel. The output filter capacitors are chosen to meet an output voltage ripple specifications, as well as the ability to handle the required ripple current stress.

For Buck converter the peak-to-peak ripple voltage is,

$$\Delta V_c = \frac{V_s k(1-k)}{8LCf^2} \tag{3.3}$$

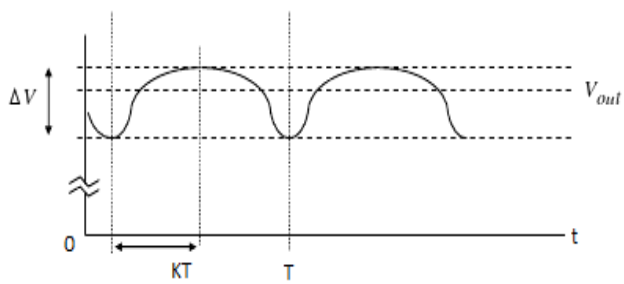

Figure 13: Ripple voltage in buck capacitor.

For Boost converter the peak-to-peak ripple voltage is,

$$\Delta V_c = \frac{I_a k}{fC} \qquad (3.4)$$

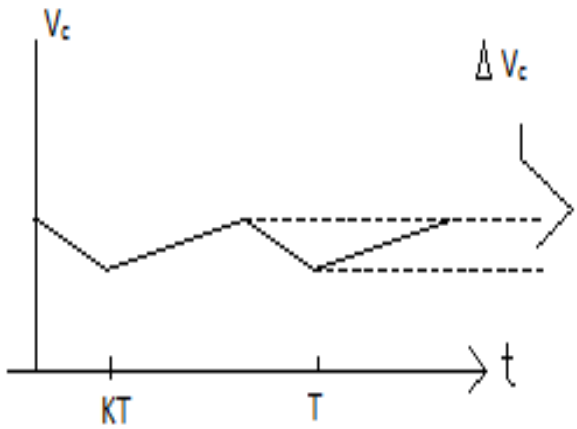

Figure 14: Ripple voltage in boost capacitor

4. SIMULATION RESULTS OF DC-DC CONVERTERS

4.1 Introduction to PSpice

The SPICE, the acronym for a Simulation Program with Integrated Circuit Emphasis, was developed at the University of California Berkeley, USA. PSpice is a commercial version, developed by Microsim Corporation. In 1997 PSpice was bought by Orcad, Inc., then in 1998 Cadence bought Orcad. There are two schematic editors are available: a) Capture and b) Schematic.

The Capture is inherited from Orcad, whilst the Schematic is inherited from Microsim. The Schematic Editor of Microsim is still available now and for the next few years until the PSpice users become more familiar with the Orcad capture.

4.2 General Procedure to use PSpice Orcad Capture

The circuit simulation in PSpice is a four stepped process:

1. Open and draw a circuit file under Orcad Capture
2. Simulate
3. Plot results using probe
4. Analyze the results

4.3 Buck Converter

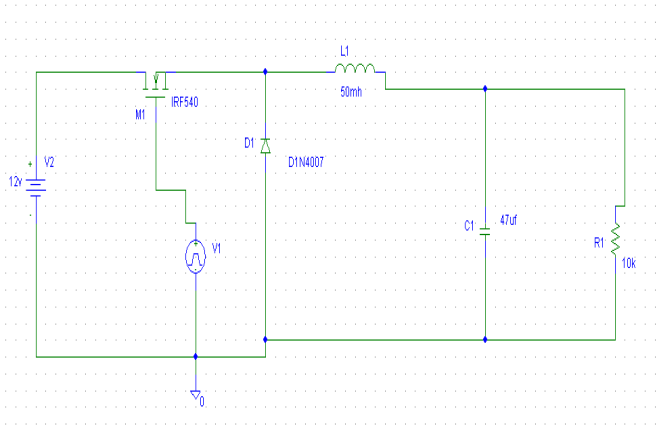

Figure 15: Circuit for the simulation of buck converter.

- 5 Volt gate pulse applied to the MOSFET IRF 540
- Circuit operating at continuous conduction mode, $L_1 >> L_c$

Table 1: Input parameters for buck converter.

Frequency	Period	On Period T_{on}	Duty Cycle	Inductance	Capacitance	Input Voltage	Load Resistance
25 kHz	40 μs	18 μs	0.45	50 mH	47 μf	12V	10 $k\Omega$

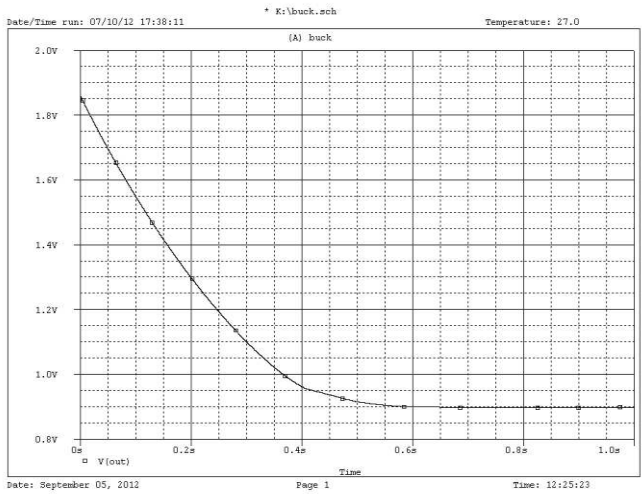

Figure 16: Output voltage of buck converter.

- Simulation has taken up to 1.0 s.
- Output voltage becomes steady at almost 600 ms.

4.4 Buck-Boost Converter

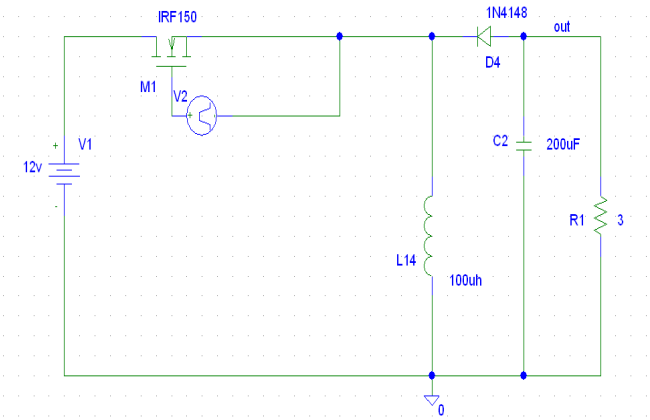

Figure 17: Circuit for the simulation of buck-boost converter

Table 2: Input parameters for the buck-boost converter.

Frequency	Period	On Period T_{on}	Duty Cycle	Inductance	Capacitance	Input Voltage	Load Resistance
25 kHz	40 μs	18 μs	0.45	100 μH	200 μf	12V	3Ω

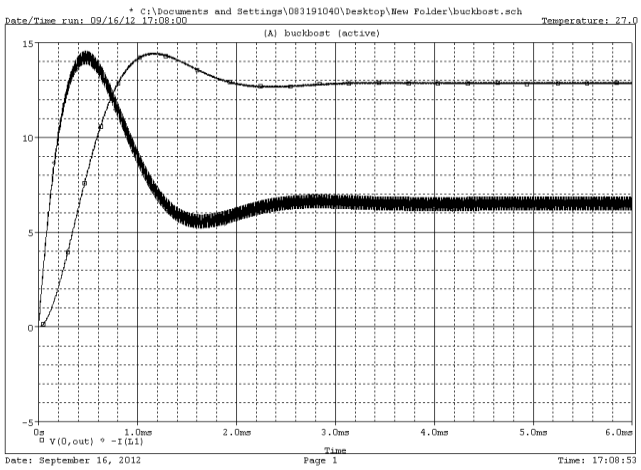

Figure 18: Output current and voltage waveform of buck-boost converter.

- Simulation has taken up to 6.0 ms.
- Output voltage becomes peak at 1.1 ms and at 14.4 volts.
- Output current becomes peak at 0.5 ms and at 14.5 volts.
- Current and voltage don't reach from zero to the peak during same time.
- In steady state positions the current falls more than the voltage.
- Better the ripple current better the performance which depends on circuit parameters.

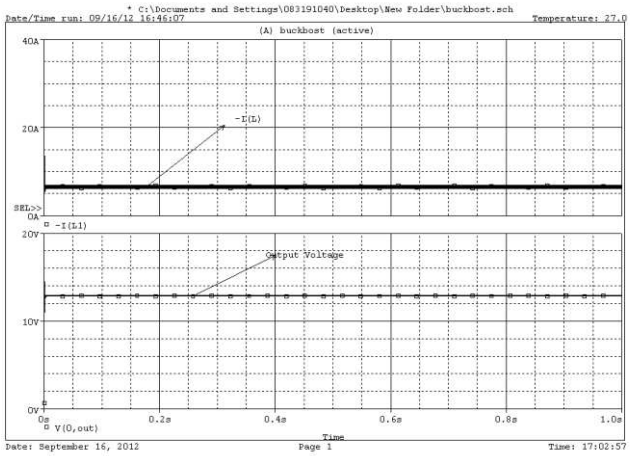

Figure 19: Output current and voltage waveform of buck-boost converter.

- Simulation has taken up to 1.0 s.
- Output voltage becomes peak at 1.1 ms and at 14.4 volts.
- Output current becomes peak at 0.5 ms and at 14.5 volts.
- Current and voltage don't reach from zero to the peak during same time.
- In steady state positions the current falls more than the voltage.
- Better the ripple current better the performance which depends on circuit parameters.

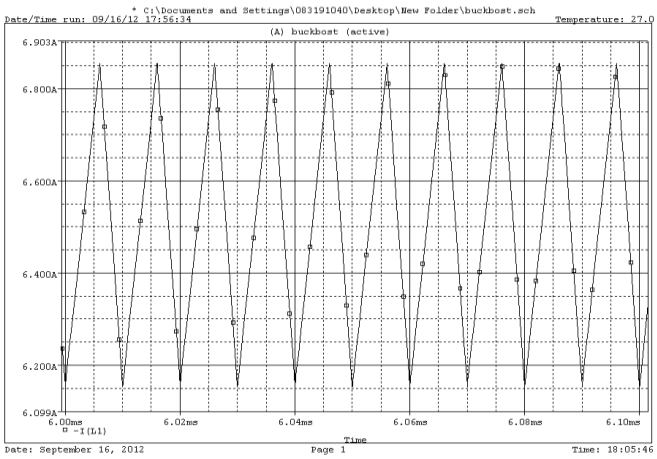

Figure 20: Output ripple current waveform of buck-boost converter.

- This part of the waveform has taken from the output current.

- Simulation has taken from 6.00 ms to 6.10 ms.
- Minimum inductor current is 6.140A and the maximum is 6.850A.
- $\Delta I = I_2 - I_1$ is the peak to peak ripple current of inductor which depends on input voltage, inductance and time.
- Better the ripple current better the performance.
- Ripple current can be reduced by decreasing the input voltage or increasing the inductance.

5. CONCLUSIONS

From the simulation results it is found that in case of the buck, boost and buck-boost converters, the desired output voltages can be obtained by selecting proper values of inductor, capacitor and switching frequency. All of these individual theories were difficult for anyone to grasp primarily and putting them collectively in the simulator which was extremely puzzling. But it has been done most excellent to formulate an outstanding scheme dissertation with affluent in its contest. At each stage, targets were set to acquire the necessary skills to meet the criteria of the research and design the circuits for implementation into the software simulation. This research gives the opportunity to study new skills and raise valuable knowledge in circuit designing and problem solving skills which has greatly enriched knowledge and understanding through the erudition route which may help one in for the further progression.

ACKNOWLEDGEMENT

The authors are very grateful to the Department of ECE, Presidency University, Bangladesh and Department of EEE, Bangladesh University of Engineering and Technology (BUET) for supporting the equipment for this research works done.

REFERENCES

[1] Muhammad H. Rashid, "Power Electronics: Circuits, Devices, and Application". THIRD EDITION.
[2] R. D. Middlebrook, "Power Electronics: Topologies, Modeling and Measurement". Proc. IEEE Int. Symp. Circuits System, April 1981.
[3] Jaber Abu-Qahouq and Issa Batarseh, "Generalized Analysis of Soft-Switching DC-DC Converters". International Symposium on Circuits And Systems (ISCAS- IEEE); May 28-31, 2000.
[4] Robert W. Erickson and Dragon Maksimoni, "Fundamentals of Power Electronics". SECOND EDITION, Springer International Edition.
[5] R. Tymerski and V. Vorperian, "Generation, Classification and Analysis of Switched-mode DC to DC Converters by the use of Converter Cells". Proc. INTELEC'86, pp. 181-195, Oct. 1986.
[6] Wikipedia, the Free Encyclopedia, "Buck Converter (online), Available from http://en.wikipedia.org/wiki/Buck converter".
[7] Wikipedia, the Free Encyclopedia, "Boost Converter (online), Available from http://en.wikipedia.org/wiki/Boost converter".
[8] Wikipedia, the Free Encyclopedia, "Buck-boost Converter (online), Available from http://en.wikipedia.org/wiki/Buck-boost converter".

BIOGRAPHIES

Ms. Shafinaz Akter Lopa has done her B. Sc in Electrical and Electronic Engineering from Presidency University, Dhaka, Bangladesh. She has served as a part time Lecturer for EEE of EETE in Dhaka International University, Bangladesh for more than two years. Now she is searching for a better research group in a good University for her MS degree under any scholarship. She has two published articles and two conference proceedings.

Mr. Shahzad Hossain has done his B. Sc and M. Sc from SUST and done all the theory courses for M. Phil. in BUET, Bangladesh in Physics. Prior to BAEC he has served in BUET and Presidency University, Bangladesh as a Lecturer for more than three years. Now he is working as a PhD scholar in University of Brunei Darussalam, Brunei. He has seven published articles and nine conference proceedings.

Mr. Muhammad Kamrul Hasan has completed his B. Sc and M. S in Physics from SUST, Bangladesh. He is working as a Senior Lecturer in Department of Physics, Trust College, Dhaka, Bangladesh for more than two years. He has one published article and three conference proceedings.