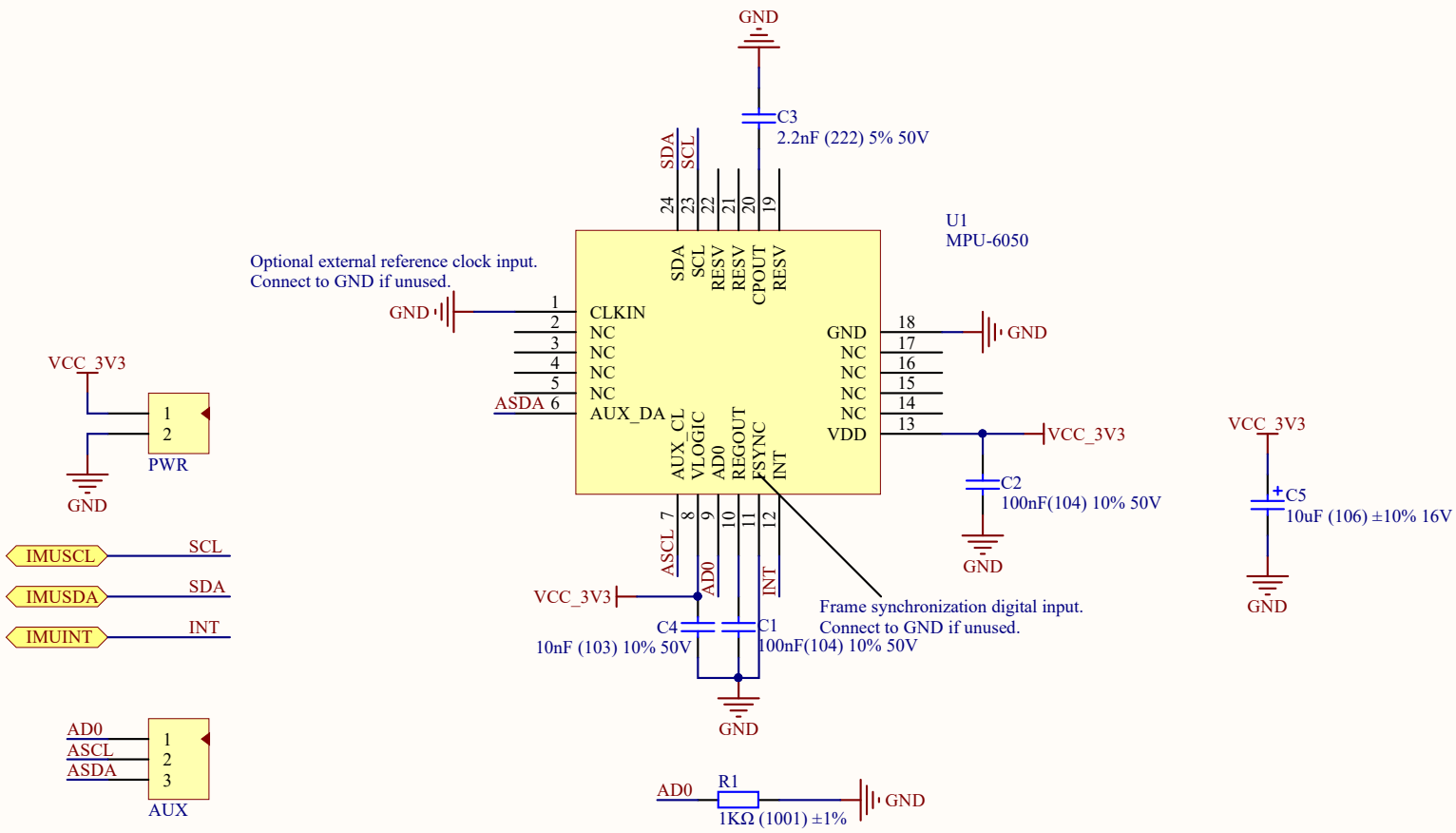

Title		
Size A	Number	Revision
Date: 4/27/2017		Sheet of
File: D:\Project\..\imu.SchDoc		Drawn By:

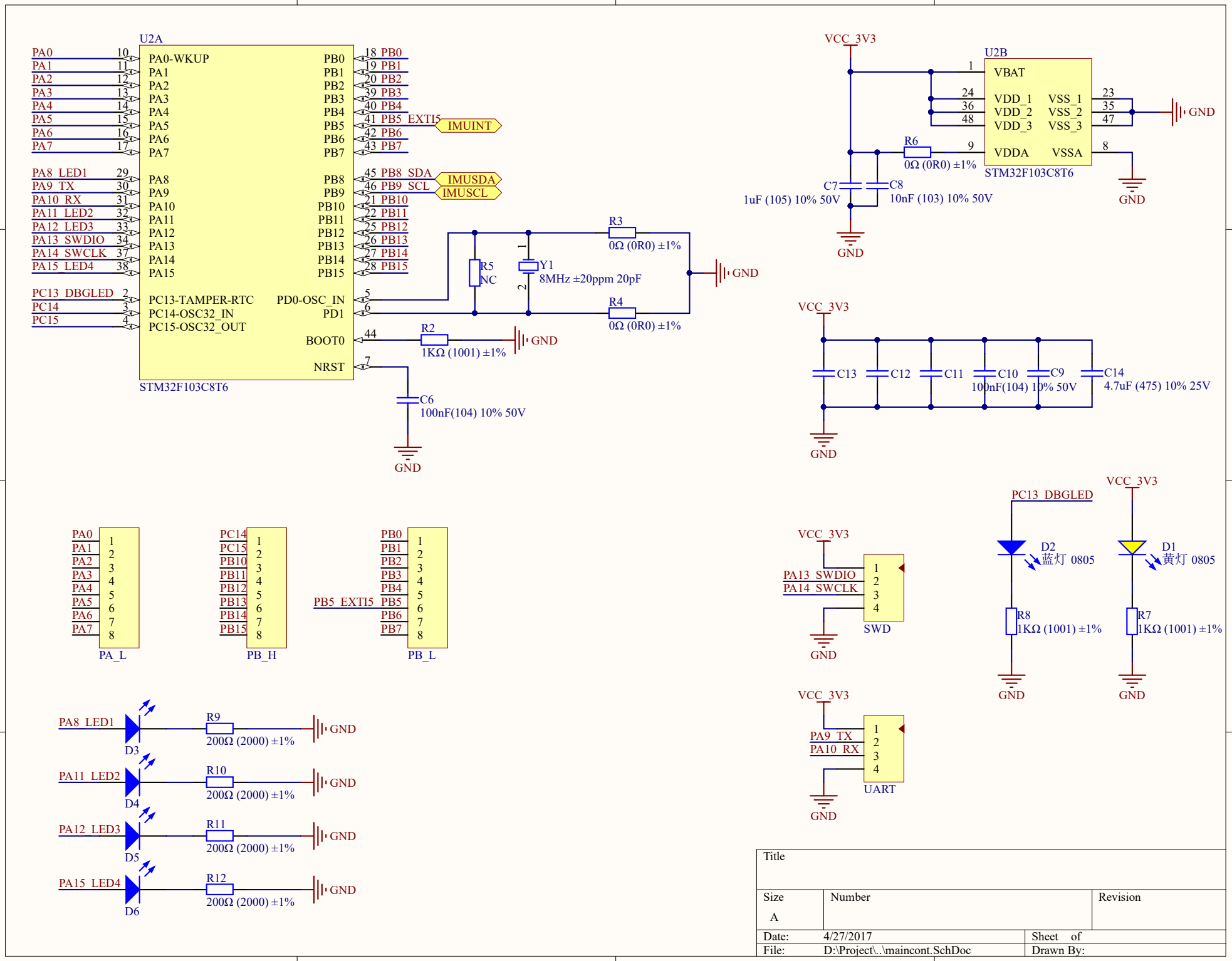
U2A
PA0-WKUP
PA1
PA2
PA3
PA4
PA5
PA6
PA7
PA8
PA9
PA10
PA11
PA12
PA13
PA14
PA15
PC13-TAMPER-RTC
PC14-OSC32_IN
PC15-OSC32_OUT
PD0-OSC_IN
PD1
BOOT0
NRST
PB0
PB1
PB2
PB3
PB4
PB5
PB6
PB7
PB8
PB9
PB10
PB11
PB12
PB13
PB14
PB15
PA8_LED1
PA9_TX
PA10_RX
PA11_LED2
PA12_LED3
PA13_SWDIO
PA14_SWCLK
PA15_LED4
PC13_DBGLED
PC14
PC15
PB5_EXTI5
PB8_SDA
PB9_SCL
IMUINT
IMUSDA
IMUSCL
STM32F103C8T6
R3
0Ω (0R0) ±1%
R4
0Ω (0R0) ±1%
R5
NC
Y1
8MHz ±20ppm 20pF
R2
1KΩ (1001) ±1%
C6
100nF(104) 10% 50V
GND
VCC_3V3
U2B
VBAT
VDD_1
VDD_2
VDD_3
VDDA
VSS_1
VSS_2
VSS_3
VSSA
STM32F103C8T6
R6
0Ω (0R0) ±1%
C7
1uF (105) 10% 50V
C8
10nF (103) 10% 50V
C13
C12
C11
C10
100nF(104) 10% 50V
C9
C14
4.7uF (475) 10% 25V
PA_L
PB_H
PB_L
SWD
UART
PC13_DBGLED
D2
蓝灯 0805
D1
黄灯 0805
R8
1KΩ (1001) ±1%
R7
1KΩ (1001) ±1%
PA8_LED1
PA11_LED2
PA12_LED3
PA15_LED4
D3
D4
D5
D6
R9
R10
R11
R12
200Ω (2000) ±1%
Title
Size
A
Number
Revision
Date: 4/27/2017
Sheet of
File: D:\Project\..\maincont.SchDoc
Drawn By:

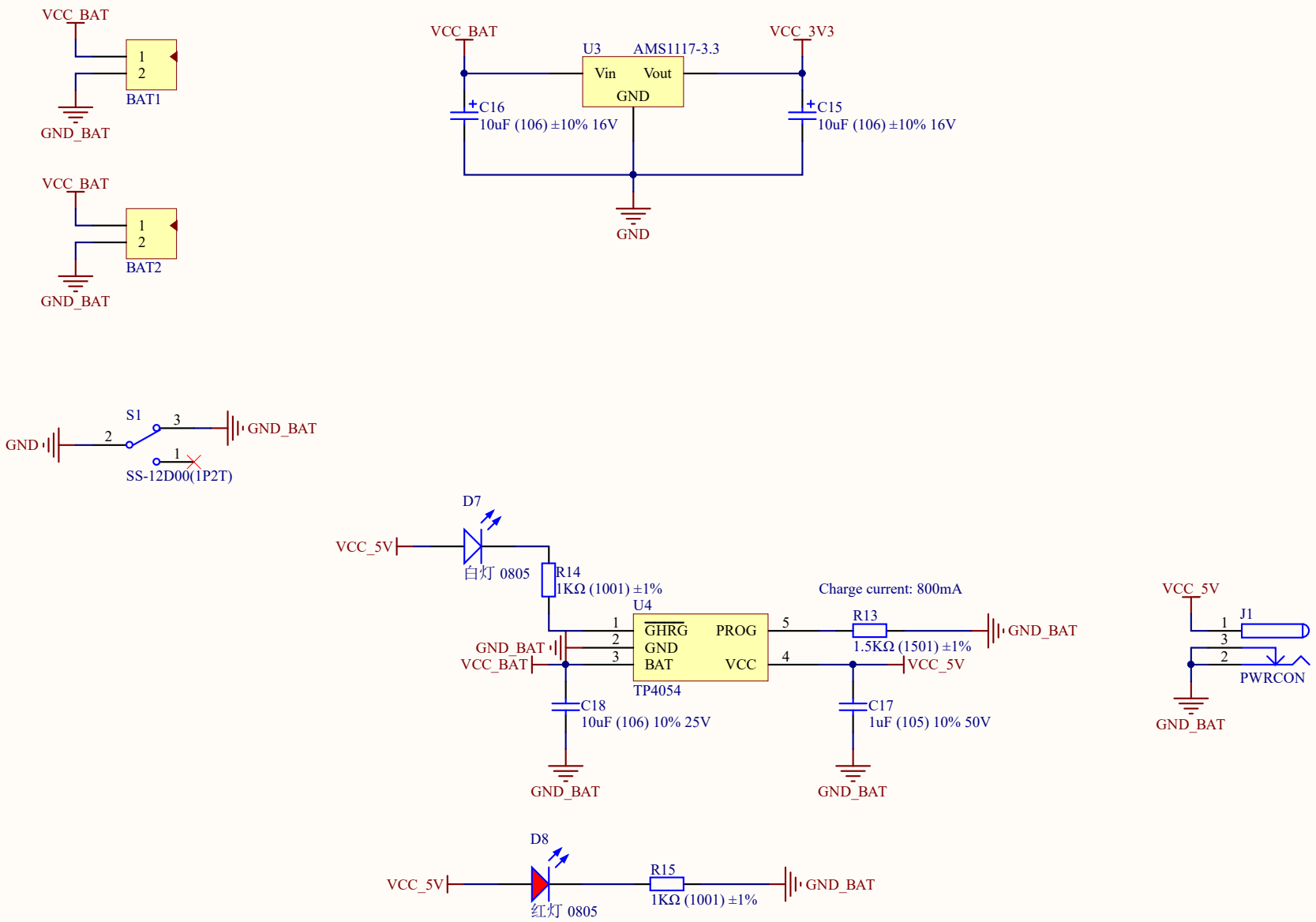

Title		
Size A	Number	Revision
Date: 4/27/2017		Sheet of
File: D:\Project\..\power.SchDoc		Drawn By:

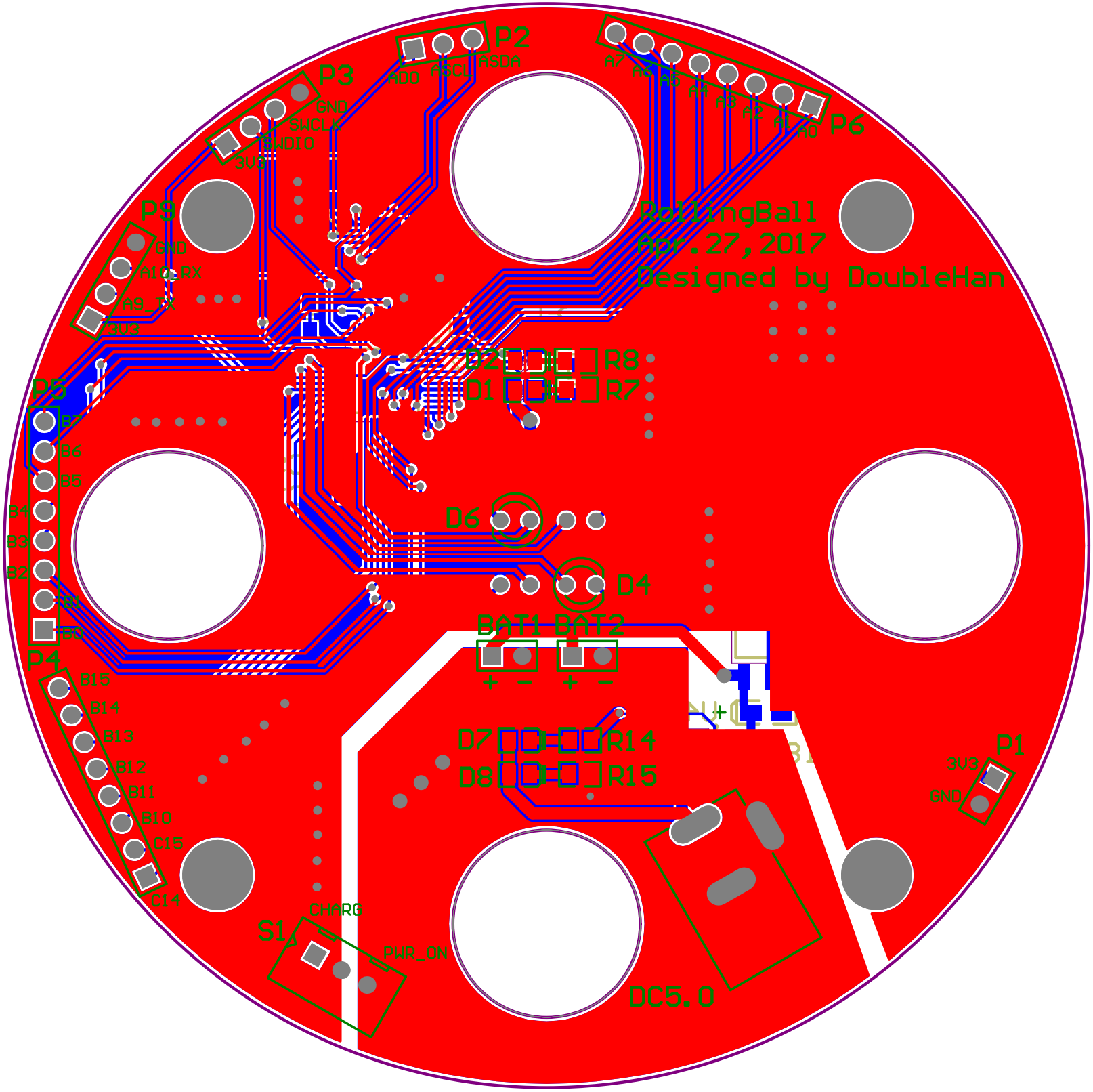
P2
ADO
ASCL
ASDA
P3
GND
PSWCLK
NSWDIO
3V3
P6
A7
A6
A5
A4
A3
A2
A1
A0
P9
GND
A10_RX
A9_TX
3V3
RollingBall
Apr.27,2017
Designed by DoubleHan
D2
R8
D1
R7
P5
B7
B6
B5
B4
B3
B2
B1
B0
D6
D4
BAT1
BAT2
P4
B15
B14
B13
B12
B11
B10
C15
C14
D7
R14
D8
R15
P1
3V3
GND
CHARG
S1
PWR_ON
DC5.0