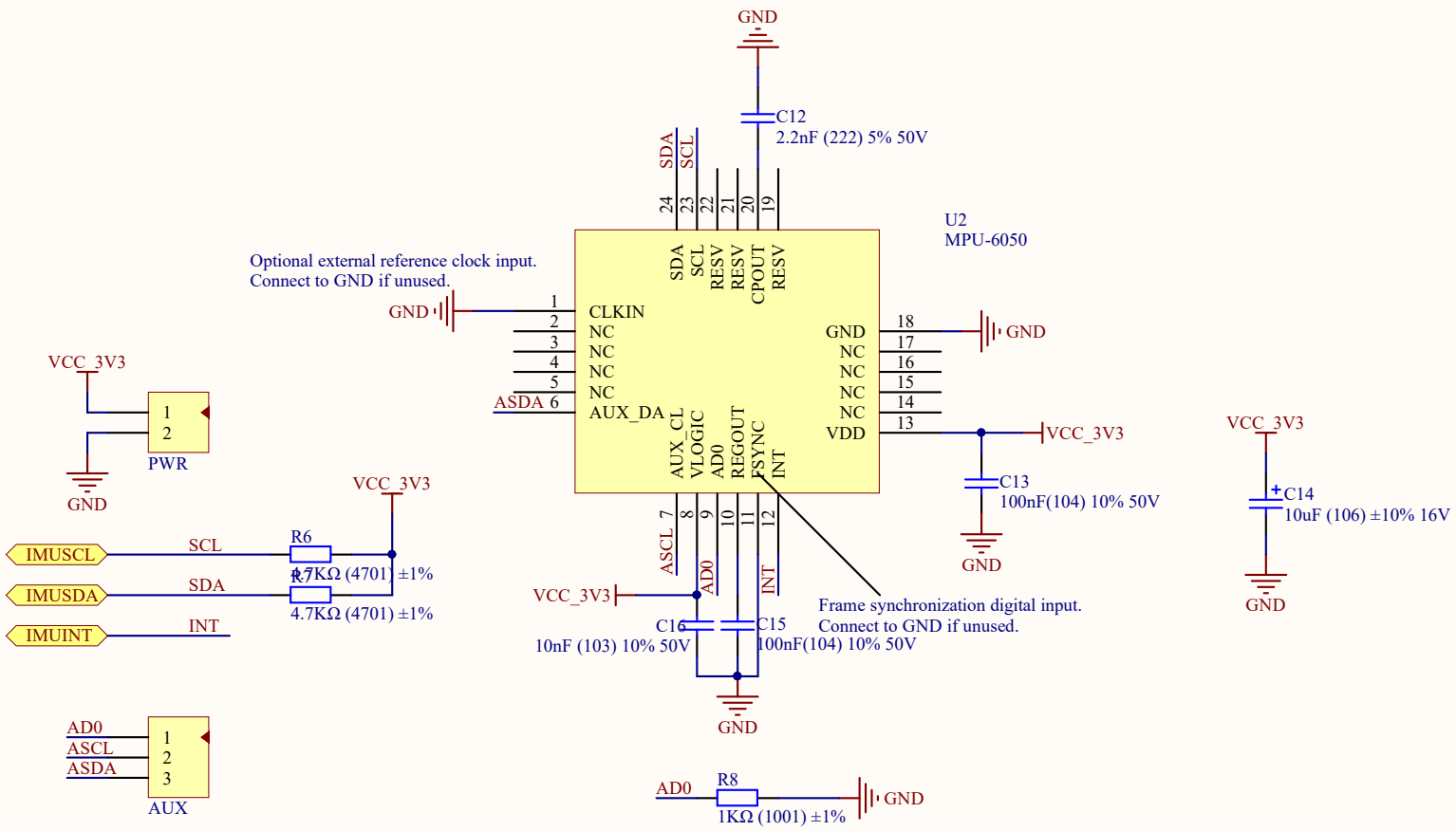

Title		
Size A	Number	Revision
Date: 5/7/2017		Sheet of
File: D:\Project\..\imu.SchDoc		Drawn By:

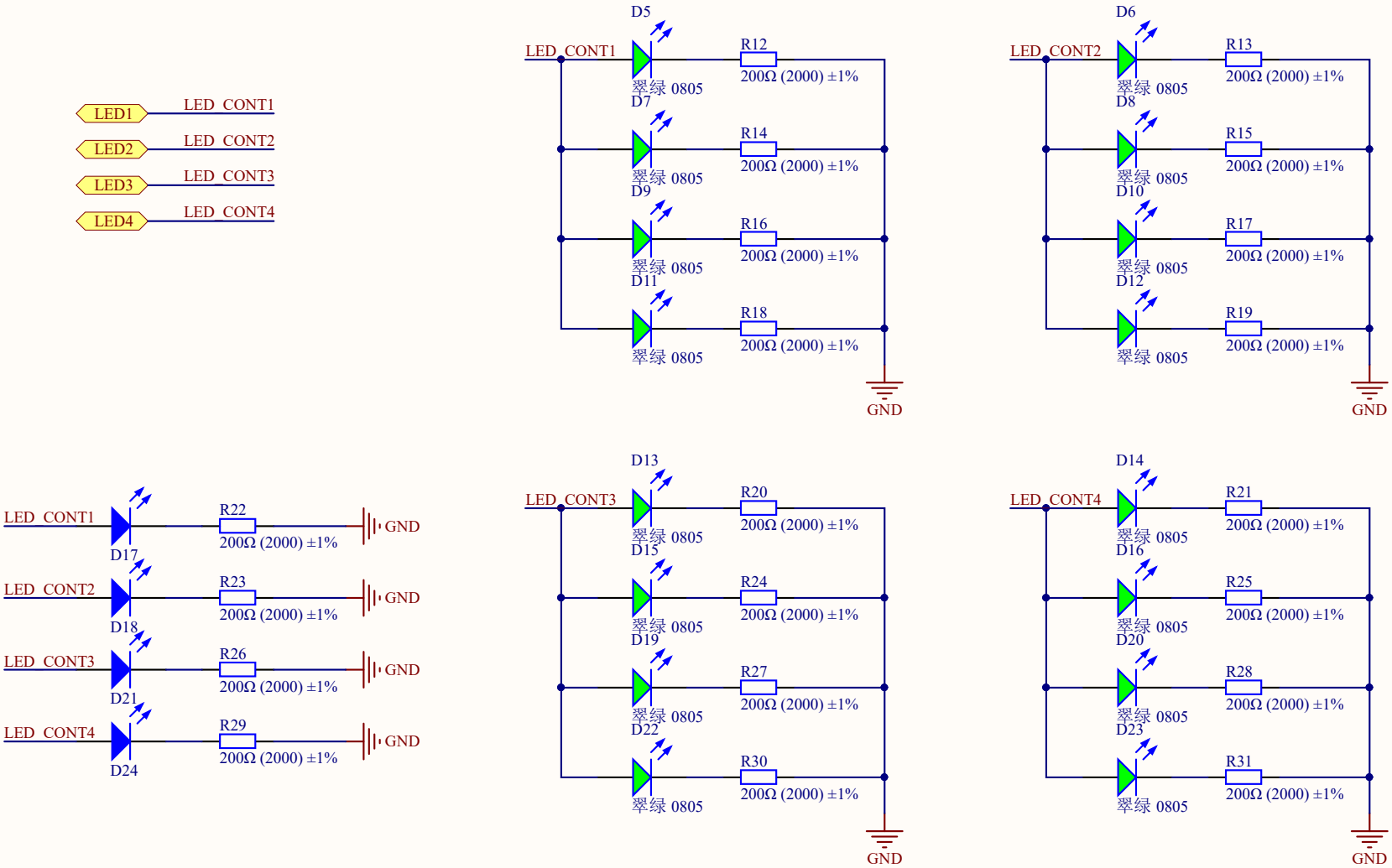

Title		
Size A	Number	Revision
Date: 5/7/2017		Sheet of
File: D:\Project\..\LED.SchDoc		Drawn By:

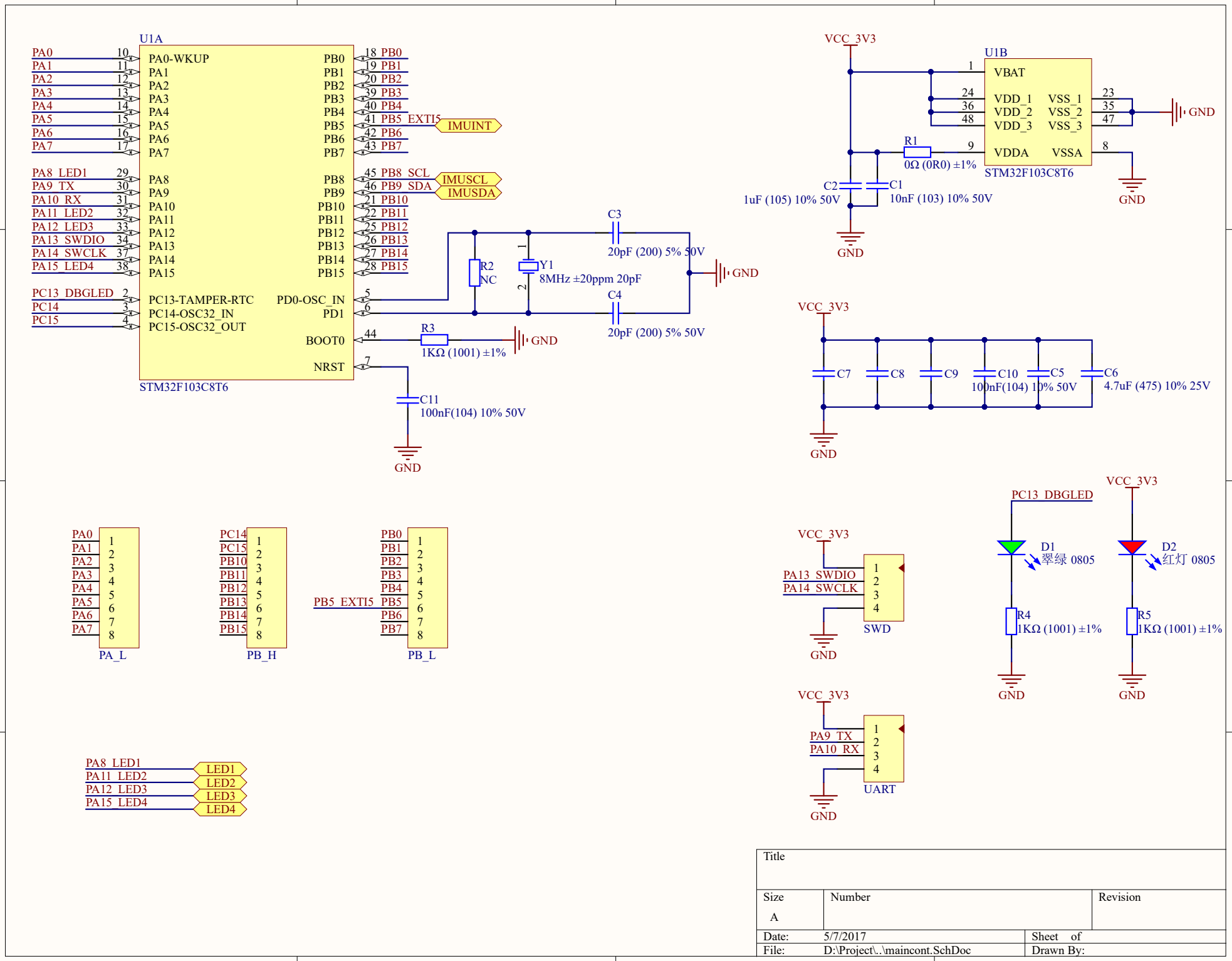
U1A
STM32F103C8T6
PA0-WKUP
PA1
PA2
PA3
PA4
PA5
PA6
PA7
PA8
PA9
PA10
PA11
PA12
PA13
PA14
PA15
PC13-TAMPER-RTC
PC14-OSC32_IN
PC15-OSC32_OUT
PD0-OSC_IN
PD1
BOOT0
NRST
PB0
PB1
PB2
PB3
PB4
PB5
PB6
PB7
PB8
PB9
PB10
PB11
PB12
PB13
PB14
PB15
PA8_LED1
PA9_TX
PA10_RX
PA11_LED2
PA12_LED3
PA13_SWDIO
PA14_SWCLK
PA15_LED4
PC13_DBGLED
PC14
PC15
PB5_EXTI5
PB8_SCL
PB9_SDA
IMUINT
IMUSCL
IMUSDA
R2
NC
Y1
8MHz ±20ppm 20pF
C3
20pF (200) 5% 50V
C4
20pF (200) 5% 50V
R3
1KΩ (1001) ±1%
C11
100nF(104) 10% 50V
GND
VCC_3V3
U1B
STM32F103C8T6
VBAT
VDD_1
VDD_2
VDD_3
VDDA
VSS_1
VSS_2
VSS_3
VSSA
R1
0Ω (0R0) ±1%
C2
1uF (105) 10% 50V
C1
10nF (103) 10% 50V
C7
C8
C9
C10
100nF(104) 10% 50V
C5
C6
4.7uF (475) 10% 25V
PA_L
PB_H
PB_L
SWD
UART
D1
翠绿 0805
D2
红灯 0805
R4
1KΩ (1001) ±1%
R5
1KΩ (1001) ±1%
LED1
LED2
LED3
LED4
Title
Size
A
Number
Revision
Date: 5/7/2017
Sheet of
File: D:\Project\..\maincont.SchDoc
Drawn By:

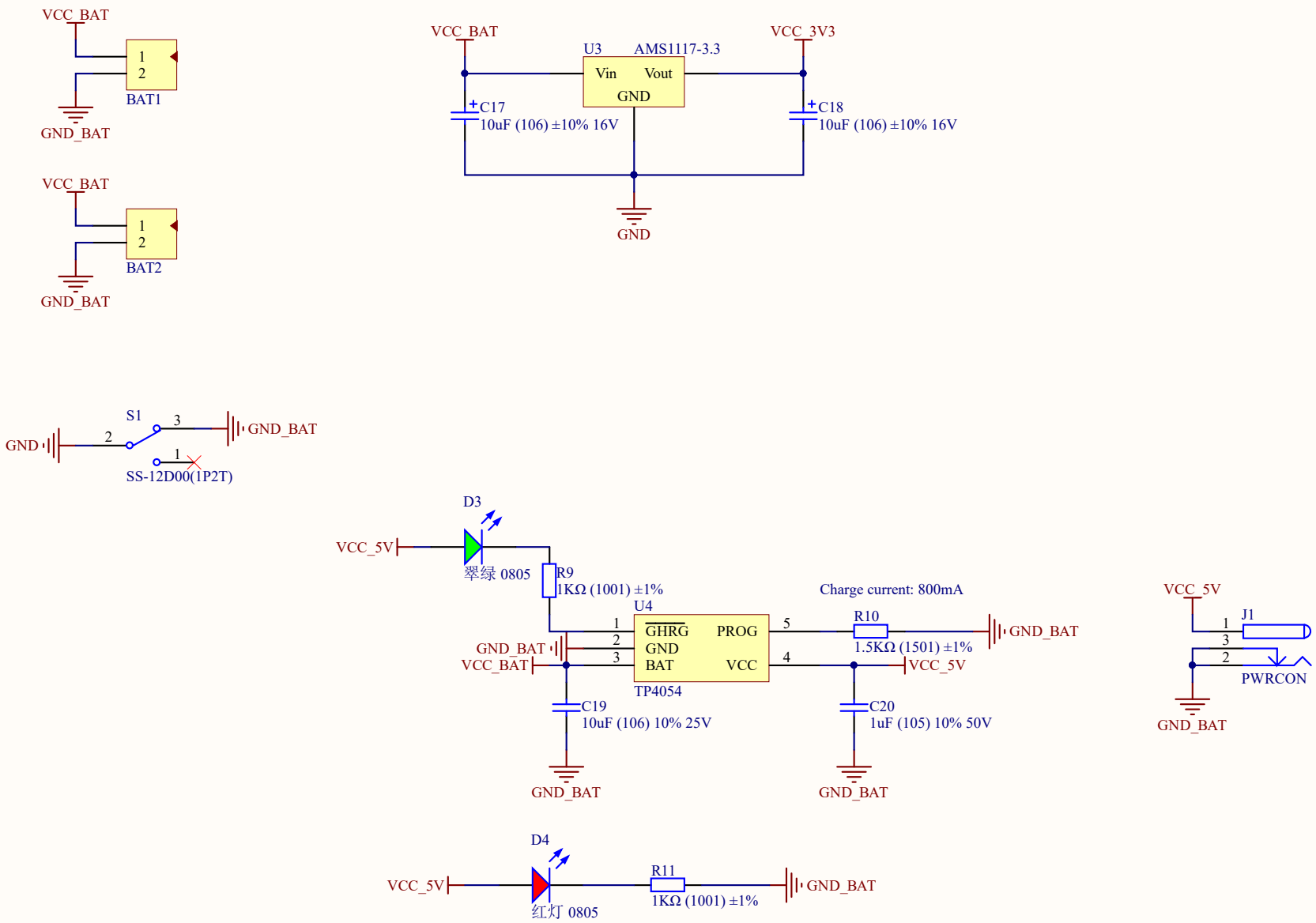

Title		
Size A	Number	Revision
Date: 5/7/2017		Sheet of
File: D:\Project\..\power.SchDoc		Drawn By:

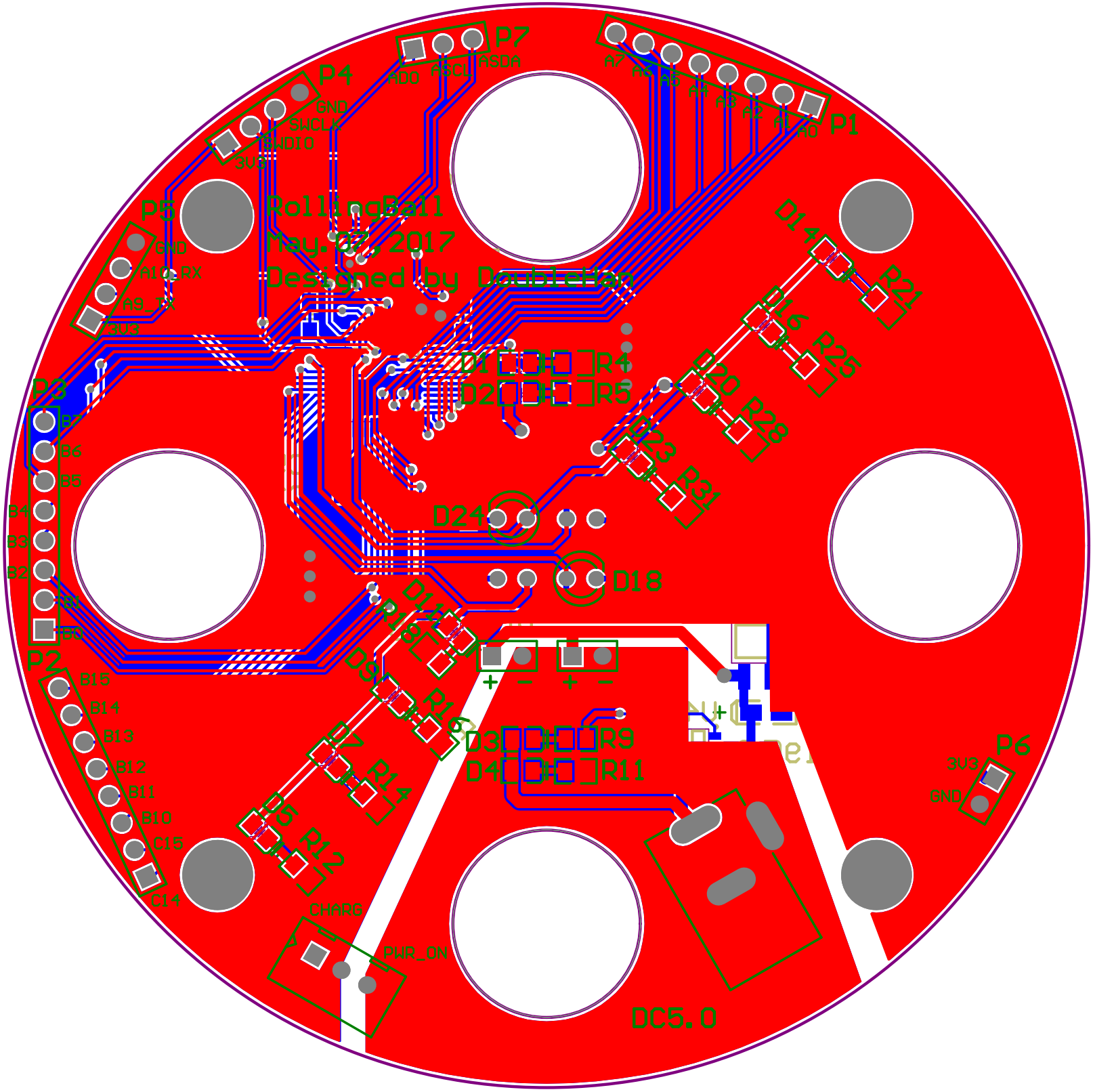
RollingBall
May. 07, 2017
Designed by DoubleHan
P1
P2
P3
P4
P5
P6
P7
D14
D24
D18
D1
D2
D3
D4
R4
R5
R9
R11
R12
R14
R21
R25
R28
R31
CHARG
PWR_ON
DC5.0