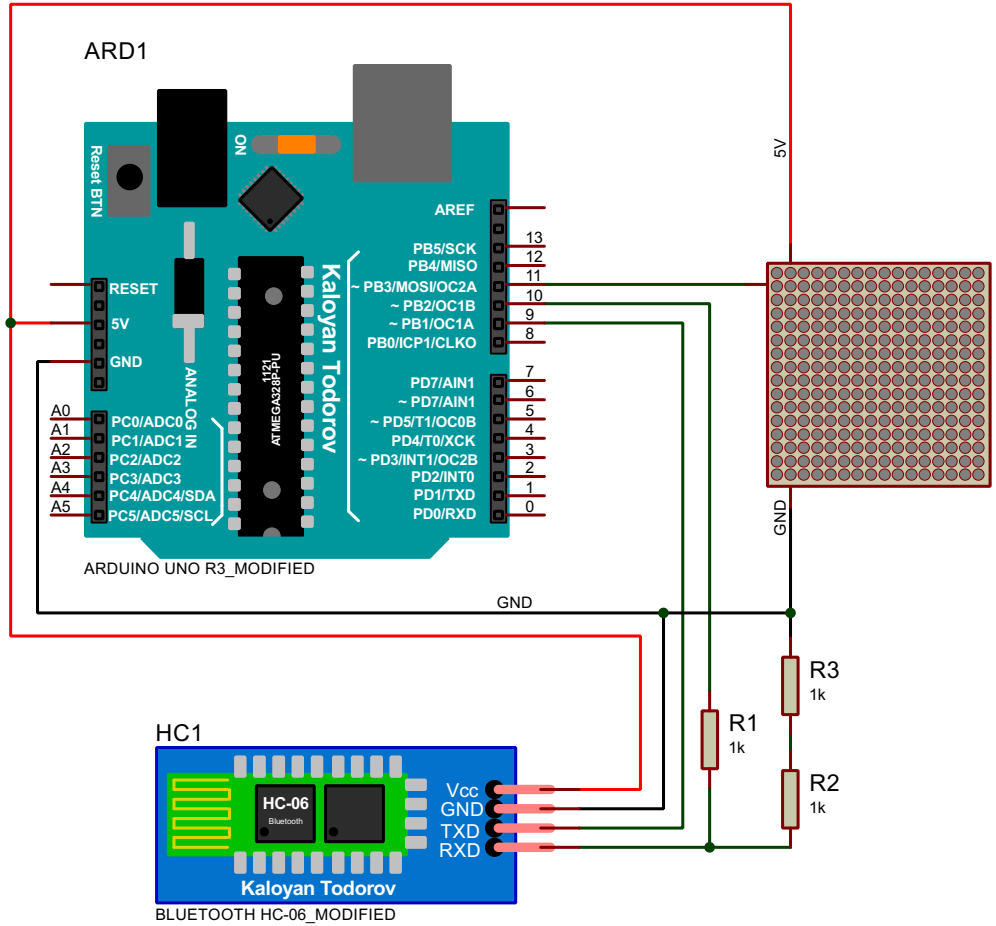

FILE NAME: ProjectColorSchematic.pdsprj	DATE: 01/09/2024
DESIGN TITLE: ProjectColorSchematic.pdsprj	
PATH: C:\Users\ktodo\OneDrive\Desktop\Diplomna\Schematics\ProjectC	PAGE: 1 of 1
BY: @AUTHOR REV:@REV	
BOARD: @BOARD	TIME: 01:59:52