IEEE SA
STANDARDS
ASSOCIATION

IEEE Standard Definitions for Excitation Systems for Synchronous Machines

STANDARDS

IEEE Power and Energy Society

Developed by the
Energy Development and Power Generation
Committee

IEEE Std 421.1™-2021
(Revision of IEEE Std 421.1-2007)

IEEE

IEEE Std 421.1™-2021
(Revision of IEEE Std 421.1-2007)

IEEE Standard Definitions for Excitation Systems for Synchronous Machines

Developed by the

Energy Development and Power Generation Committee
of the
IEEE Power and Energy Society

Approved 8 December 2021

IEEE SA Standards Board

Abstract: Defined in this standard are elements and commonly used components in excitation systems. Also contained are definitions for excitation systems applied to synchronous machines. An included annex contains one-line block diagrams of some typical excitation systems. These are presented to illustrate the defined terminology referenced in this standard and clarify the understanding of the excitation control system.

Keywords: definitions of excitation controls, excitation block diagrams, excitation control systems, excitation systems terminology, IEEE 421.1, synchronous generator controls

The Institute of Electrical and Electronics Engineers, Inc.
3 Park Avenue, New York, NY 10016-5997, USA

Copyright © 2022 by The Institute of Electrical and Electronics Engineers, Inc.
All rights reserved. Published 17 March 2022. Printed in the United States of America.

IEEE is a registered trademark in the U.S. Patent & Trademark Office, owned by The Institute of Electrical and Electronics Engineers, Incorporated.

PDF: ISBN 978-1-5044-8287-5 STD25166
Print: ISBN 978-1-5044-8288-2 STDPD25166

IEEE prohibits discrimination, harassment, and bullying.
For more information, visit https://www.ieee.orgabout/corporate/governance/p9-26.html.
No part of this publication may be reproduced in any form, in an electronic retrieval system or otherwise, without the prior written permission of the publisher.

Important Notices and Disclaimers Concerning IEEE Standards Documents

IEEE Standards documents are made available for use subject to important notices and legal disclaimers. These notices and disclaimers, or a reference to this page (https://standards.ieee.org/ipr/disclaimers.html), appear in all standards and may be found under the heading "Important Notices and Disclaimers Concerning IEEE Standards Documents."

Notice and Disclaimer of Liability Concerning the Use of IEEE Standards Documents

IEEE Standards documents are developed within the IEEE Societies and the Standards Coordinating Committees of the IEEE Standards Association (IEEE SA) Standards Board. IEEE develops its standards through an accredited consensus development process, which brings together volunteers representing varied viewpoints and interests to achieve the final product. IEEE Standards are documents developed by volunteers with scientific, academic, and industry-based expertise in technical working groups. Volunteers are not necessarily members of IEEE or IEEE SA, and participate without compensation from IEEE. While IEEE administers the process and establishes rules to promote fairness in the consensus development process, IEEE does not independently evaluate, test, or verify the accuracy of any of the information or the soundness of any judgments contained in its standards.

IEEE makes no warranties or representations concerning its standards, and expressly disclaims all warranties, express or implied, concerning this standard, including but not limited to the warranties of merchantability, fitness for a particular purpose and non-infringement. In addition, IEEE does not warrant or represent that the use of the material contained in its standards is free from patent infringement. IEEE standards documents are supplied "AS IS" and "WITH ALL FAULTS."

Use of an IEEE standard is wholly voluntary. The existence of an IEEE Standard does not imply that there are no other ways to produce, test, measure, purchase, market, or provide other goods and services related to the scope of the IEEE standard. Furthermore, the viewpoint expressed at the time a standard is approved and issued is subject to change brought about through developments in the state of the art and comments received from users of the standard.

In publishing and making its standards available, IEEE is not suggesting or rendering professional or other services for, or on behalf of, any person or entity, nor is IEEE undertaking to perform any duty owed by any other person or entity to another. Any person utilizing any IEEE Standards document, should rely upon his or her own independent judgment in the exercise of reasonable care in any given circumstances or, as appropriate, seek the advice of a competent professional in determining the appropriateness of a given IEEE standard.

IN NO EVENT SHALL IEEE BE LIABLE FOR ANY DIRECT, INDIRECT, INCIDENTAL, SPECIAL, EXEMPLARY, OR CONSEQUENTIAL DAMAGES (INCLUDING, BUT NOT LIMITED TO: THE NEED TO PROCURE SUBSTITUTE GOODS OR SERVICES; LOSS OF USE, DATA, OR PROFITS; OR BUSINESS INTERRUPTION) HOWEVER CAUSED AND ON ANY THEORY OF LIABILITY, WHETHER IN CONTRACT, STRICT LIABILITY, OR TORT (INCLUDING NEGLIGENCE OR OTHERWISE) ARISING IN ANY WAY OUT OF THE PUBLICATION, USE OF, OR RELIANCE UPON ANY STANDARD, EVEN IF ADVISED OF THE POSSIBILITY OF SUCH DAMAGE AND REGARDLESS OF WHETHER SUCH DAMAGE WAS FORESEEABLE.

Translations

The IEEE consensus development process involves the review of documents in English only. In the event that an IEEE standard is translated, only the English version published by IEEE is the approved IEEE standard.

Copyright © 2022 IEEE. All rights reserved.

Official statements

A statement, written or oral, that is not processed in accordance with the IEEE SA Standards Board Operations Manual shall not be considered or inferred to be the official position of IEEE or any of its committees and shall not be considered to be, nor be relied upon as, a formal position of IEEE. At lectures, symposia, seminars, or educational courses, an individual presenting information on IEEE standards shall make it clear that the presenter's views should be considered the personal views of that individual rather than the formal position of IEEE, IEEE SA, the Standards Committee, or the Working Group.

Comments on standards

Comments for revision of IEEE Standards documents are welcome from any interested party, regardless of membership affiliation with IEEE or IEEE SA. However, **IEEE does not provide interpretations, consulting information, or advice pertaining to IEEE Standards documents.**

Suggestions for changes in documents should be in the form of a proposed change of text, together with appropriate supporting comments. Since IEEE standards represent a consensus of concerned interests, it is important that any responses to comments and questions also receive the concurrence of a balance of interests. For this reason, IEEE and the members of its Societies and Standards Coordinating Committees are not able to provide an instant response to comments, or questions except in those cases where the matter has previously been addressed. For the same reason, IEEE does not respond to interpretation requests. Any person who would like to participate in evaluating comments or in revisions to an IEEE standard is welcome to join the relevant IEEE working group. You can indicate interest in a working group using the Interests tab in the Manage Profile and Interests area of the IEEE SA myProject system. An IEEE Account is needed to access the application.

Comments on standards should be submitted using the Contact Us form.

Laws and regulations

Users of IEEE Standards documents should consult all applicable laws and regulations. Compliance with the provisions of any IEEE Standards document does not constitute compliance to any applicable regulatory requirements. Implementers of the standard are responsible for observing or referring to the applicable regulatory requirements. IEEE does not, by the publication of its standards, intend to urge action that is not in compliance with applicable laws, and these documents may not be construed as doing so.

Data privacy

Users of IEEE Standards documents should evaluate the standards for considerations of data privacy and data ownership in the context of assessing and using the standards in compliance with applicable laws and regulations.

Copyrights

IEEE draft and approved standards are copyrighted by IEEE under US and international copyright laws. They are made available by IEEE and are adopted for a wide variety of both public and private uses. These include both use, by reference, in laws and regulations, and use in private self-regulation, standardization, and the promotion of engineering practices and methods. By making these documents available for use and adoption by public authorities and private users, IEEE does not waive any rights in copyright to the documents.

Copyright © 2022 IEEE. All rights reserved.

Photocopies

Subject to payment of the appropriate licensing fees, IEEE will grant users a limited, non-exclusive license to photocopy portions of any individual standard for company or organizational internal use or individual, non-commercial use only. To arrange for payment of licensing fees, please contact Copyright Clearance Center, Customer Service, 222 Rosewood Drive, Danvers, MA 01923 USA; +1 978 750 8400; https://www.copyright.com/. Permission to photocopy portions of any individual standard for educational classroom use can also be obtained through the Copyright Clearance Center.

Updating of IEEE Standards documents

Users of IEEE Standards documents should be aware that these documents may be superseded at any time by the issuance of new editions or may be amended from time to time through the issuance of amendments, corrigenda, or errata. An official IEEE document at any point in time consists of the current edition of the document together with any amendments, corrigenda, or errata then in effect.

Every IEEE standard is subjected to review at least every 10 years. When a document is more than 10 years old and has not undergone a revision process, it is reasonable to conclude that its contents, although still of some value, do not wholly reflect the present state of the art. Users are cautioned to check to determine that they have the latest edition of any IEEE standard.

In order to determine whether a given document is the current edition and whether it has been amended through the issuance of amendments, corrigenda, or errata, visit IEEE Xplore or contact IEEE. For more information about the IEEE SA or IEEE's standards development process, visit the IEEE SA Website.

Errata

Errata, if any, for all IEEE standards can be accessed on the IEEE SA Website. Search for standard number and year of approval to access the web page of the published standard. Errata links are located under the Additional Resources Details section. Errata are also available in IEEE Xplore. Users are encouraged to periodically check for errata.

Patents

IEEE Standards are developed in compliance with the IEEE SA Patent Policy.

Attention is called to the possibility that implementation of this standard may require use of subject matter covered by patent rights. By publication of this standard, no position is taken by the IEEE with respect to the existence or validity of any patent rights in connection therewith. If a patent holder or patent applicant has filed a statement of assurance via an Accepted Letter of Assurance, then the statement is listed on the IEEE SA Website at https://standards.ieee.org/about/sasb/patcom/patents.html. Letters of Assurance may indicate whether the Submitter is willing or unwilling to grant licenses under patent rights without compensation or under reasonable rates, with reasonable terms and conditions that are demonstrably free of any unfair discrimination to applicants desiring to obtain such licenses.

Essential Patent Claims may exist for which a Letter of Assurance has not been received. The IEEE is not responsible for identifying Essential Patent Claims for which a license may be required, for conducting inquiries into the legal validity or scope of Patents Claims, or determining whether any licensing terms or conditions provided in connection with submission of a Letter of Assurance, if any, or in any licensing agreements are reasonable or non-discriminatory. Users of this standard are expressly advised that determination of the validity of any patent rights, and the risk of infringement of such rights, is entirely their own responsibility. Further information may be obtained from the IEEE Standards Association.

Copyright © 2022 IEEE. All rights reserved.

IMPORTANT NOTICE

IEEE Standards do not guarantee or ensure safety, security, health, or environmental protection, or ensure against interference with or from other devices or networks. IEEE Standards development activities consider research and information presented to the standards development group in developing any safety recommendations. Other information about safety practices, changes in technology or technology implementation, or impact by peripheral systems also may be pertinent to safety considerations during implementation of the standard. Implementers and users of IEEE Standards documents are responsible for determining and complying with all appropriate safety, security, environmental, health, and interference protection practices and all applicable laws and regulations.

Copyright © 2022 IEEE. All rights reserved.

Participants

At the time this IEEE standard was completed, the ESCS-Definitions for Excitation Systems for Synchronous Machines Working Group had the following membership:

Eugene Asbury, *Chair*

Greg Anderson
Matthias Bächle
Ralf Bachmann Schiavo
Michael Basler
Jonathan Denman
Markus Egretzberger
Michael Faltas
Miao Fan
James Feltes
Alexander Glaninger-Katsching
Les Hajagos
Gaberial Haynes
Anne-Marie Hissel
Adel Houasnia
Joseph Hurley
Kiyong Kim
Ruediger Kutzner
Hermes La Macchia
Eric Lambert
Simon Lebeau
Leonardo Lima
Henrique A. Menarin
Gerard Moreau
Ravi Mutukutti
Larry Nettleton
Pierre Ouellette
Eli Pajuelo
Shawn Patterson
Eugene N. Popov
Uwe Seeger
José Taborda
Robert Thornton-Jones
David Thumser
Bruno Tonsic de Araujo
Eric Vaughn
Stephane Vignola
Allen Windhorn

The following members of the individual Standards Association balloting group voted on this standard. Balloters may have voted for approval, disapproval, or abstention.

Erick Alves
Eugene Asbury
Matthias Bächle
Ralf Bachmann Schiavo
Michael Basler
Thomas Dunmore II
Donald Dunn
Markus Egretzberger
Rostyslaw Fostiak
J.Travis Griffith
James Gurney
Werner Hoelzl
Richard Jackson
John Kay
Andreas Kunkel
Ruediger Kutzner
Mikhail Lagoda
Chung-Yiu Lam
Charles Lennon
Leonardo Lima
Lawrenc Long
O. Malik
Jeffrey McElray
Henrique A. Menarin
Daleep C. Mohla
Lorraine Padden
Eli Pajuelo
Bansi Patel
Shawn Patterson
Howard Penrose
Branimir Petosic
Lakshman Raut
Uwe Seeger
Gary Smullin
Kris Sommerstad
Eric Toft
Bruno Tonsic de Araujo
Eric Vaughn
Gerald Vaughn
John Vergis
Kenneth White
Iain Wright
John Yale
Marc Zeidman

When the IEEE SA Standards Board approved this standard on 8 December 2021, it had the following membership:

Gary Hoffman, *Chair*
Jon Walter Rosdahl, *Vice Chair*
John D. Kulick, *Past Chair*
Konstantinos Karachalios, *Secretary*

Edward A. Addy
Doug Edwards
Ramy Ahmed Fathy
J.Travis Griffith
Thomas Koshy
Joseph L. Koepfinger*
David J. Law
Howard Li
Daozhuang Lin
Kevin Lu
Daleep C. Mohla
Chenhui Niu
Damir Novosel
Annette Reilly
Dorothy Stanley
Mehmet Ulema
Lei Wang
F.Keith Waters
Karl Weber
Sha Wei
Howard Wolfman
Daidi Zhong

*Member Emeritus

Copyright © 2022 IEEE. All rights reserved.

Introduction

This introduction is not part of IEEE Std 421.1–2021, IEEE Standard for Definitions for Excitation Systems for Synchronous Machines.

This standard defines elements and commonly used components in excitation systems and contains definitions for excitation systems applied to synchronous machines. For general requirements of a synchronous machine, refer to IEEE Std C50.12™ and IEEE Std C50.13™.

A synchronous machine excitation control system operating under automatic control is a feedback control system. Thus, the Terminology of the Excitation System Subcommittee Working Group of the Energy Development and Power Generation (ED&PG) Committee adopted definitions that had a common basis to excitation systems. Efforts were made not to conflict with terms found in the *IEEE Standards Dictionary Online* but to clarify or more fully define terms as related specifically to excitation of synchronous machines.

Copyright © 2022 IEEE. All rights reserved.

Contents

1. Overview 11
   1.1 Scope 11
   1.2 Purpose 11
   1.3 Word usage 12

2. Normative references 12

3. Definitions 12

Annex A (normative) Typical elements and components of excitation control systems applied to synchronous machines for bulk power 23

Annex B (informative) Bibliography 42

Copyright © 2022 IEEE. All rights reserved.

IEEE Standard Definitions for Excitation Systems for Synchronous Machines

1. Overview

This standard contains definitions and terminology specifically related to elements and commonly used components in excitation control systems for synchronous machines. Clause 1 is an overview of the standard and provides an outline of the scope of the standard. Clause 2 lists references to other standards that are relevant to definitions presented here. Clause 3 is a listing of the relevant definitions covered in this standard.

This standard also has two annexes. Annex A is an outline of some excitation system diagrams that are referred to in some of the definitions. Annex B provides bibliographical references.

1.1 Scope

This standard defines elements and commonly used components in excitation control systems and contains definitions for excitation systems as applied to synchronous machines. These definitions should be useful in the following areas:

— Writing excitation systems specifications

— Evaluating excitation system performance

— Specifying methods for excitation system tests

— Preparing related excitation system standards

— Serving as an educational means for those becoming acquainted with excitation systems

— Modeling excitation systems

1.2 Purpose

This standard provides a common base for terminology in common usage related to excitation control systems. The definitions given in this standard assist in describing terms specifically related to excitation systems. With the advent of new excitation systems and changes in common terminology and usage, there are revisions required to keep this standard relevant.

Copyright © 2022 IEEE. All rights reserved.

1.3 Word usage

The word *shall* indicates mandatory requirements strictly to be followed in order to conform to the standard and from which no deviation is permitted (*shall* equals is *required to*).[1,2]

The word *should* indicates that among several possibilities one is recommended as particularly suitable, without mentioning or excluding others; or that a certain course of action is preferred but not necessarily required (*should* equals is *recommended that*).

The word *may* is used to indicate a course of action permissible within the limits of the standard (*may* equals is *permitted to*).

The word *can* is used for statements of possibility and capability, whether material, physical, or causal (*can* equals is *able to*).

2. Normative references

The following referenced documents are indispensable for the application of this document (i.e., they must be understood and used, so each referenced document is cited in text and its relationship to this document is explained). For dated references, only the edition cited applies. For undated references, the latest edition of the referenced document (including any amendments or corrigenda) applies.

IEEE Std 421.3™, IEEE Standard for High-Potential Test Requirements for Excitation Systems for Synchronous Machines.[3,4]

IEEE Std 421.5™, IEEE Recommended Practice for Excitation System Models for Power System Stability Studies.

3. Definitions

For the purposes of this document, the following terms and definitions apply. The *IEEE Standards Dictionary Online* should be consulted for terms not defined in this clause.[5]

ac field breaker: A circuit breaker used to disconnect the excitation system from the power potential transformer (PPT) or ac supply. *See also:* **de-excitation**.

ac regulator: *See:* **voltage regulator**.

adjuster: A device or function by which the setpoint is determined.

air-gap field voltage: The synchronous machine field voltage required to produce rated voltage on the air-gap line of the synchronous machine with its field winding at 1) 75 °C for field windings designed to operate at rating with a temperature rise of 60 °C or less; or 2) 100 °C for field windings designed to operate at rating with a temperature rise greater than 60 °C.

NOTE—This defines one per unit excitation system voltage for use in computer representation of excitation systems.[6]

[1]The use of the word *must* is deprecated and cannot be used when stating mandatory requirements, *must* is used only to describe unavoidable situations.

[2]The use of *will* is deprecated and cannot be used when stating mandatory requirements, *will* is only used in statements of fact.

[3]The IEEE standards or products referred to in this clause are trademarks of The Institute of Electrical and Electronics Engineers, Inc.

[4]IEEE publications are available from The Institute of Electrical and Electronics Engineers, 445 Hoes Lane, Piscataway, NJ 08854, USA (https://standards.ieee.org/).

[5]*IEEE Standards Dictionary Online* is available at: http://dictionaryieee.org. An IEEE account is required for access to the dictionary, and one can be created at no charge on the dictionary sign-in page.

[6]Notes in text, tables, and figures of a standard are given for information only and do not contain requirements needed to implement this standard.

Copyright © 2022 IEEE. All rights reserved.

air-gap line: The extended straight line part of the no-load saturation curve of the synchronous machine, which neglects magnetic saturation and remanent flux.

alternator-rectifier exciter: An exciter whose energy is derived from an alternator and converted to direct current by rectifiers. The exciter includes an alternator and power rectifiers that may be either noncontrolled or controlled, including gate circuitry. It is exclusive of input control elements. The alternator may be driven by any type of prime mover, most commonly the shaft of the synchronous machine. The rectifiers may be stationary or rotating with the alternator shaft.

automatic control: In excitation control system usage, automatic control refers to maintaining synchronous machine terminal voltage at a predetermined level without operator action, over the operating range of the synchronous machine.

NOTE—Voltage regulation may be modified by the action of load current compensators, power factor or var controllers, power system stabilizers, or may be constrained by the action of various limiters included in the excitation system.

automatic voltage regulator (AVR): A term often used to designate either the voltage regulator alone or the complete control system comprised of limiters, etc. *See also:* **synchronous machine regulator**.

autotracking: A function that causes the output of a control channel in the standby mode to follow the action of an active control channel to facilitate bumpless transfer under steady state conditions; for example, autotracking of the manual control to follow the automatic control. Also called a follower. *See also:* **bumpless transfer** and **null balance**.

auxiliary winding excitation system: An excitation system whose energy is derived from a separate dedicated power winding in the main generator's stator.

NOTE—See Figure A.10.

brushless exciter: An alternator-rectifier exciter employing rotating rectifiers with a direct connection to the synchronous machine field, thus eliminating the need for brushes.

NOTE—See Figure A.6.

bumpless transfer: A transfer between two control modes that results in negligible change in synchronous machine output under steady state conditions. *See also:* **null balance** and **autotracking**.

ceiling current: The maximum field current that the excitation system is designed to supply or permitted to supply by limiting action. Typically, this is related to the thermal capability of the excitation system equipment or the synchronous machine field circuit capability. *See also:* **overexcitation limiter**.

ceiling voltage: The maximum direct voltage that the excitation system is designed to supply from its terminals under defined conditions.

NOTE 1—The no-load ceiling voltage is determined with the excitation system supplying minimal current.

NOTE 2—The ceiling voltage under load is determined with the excitation system supplying synchronous machine rated field current.

NOTE 3—For an excitation system whose supply depends on the synchronous machine voltage and (if applicable) current, the nature of power system disturbance and specific design parameters of the excitation system and the synchronous

Copyright © 2022 IEEE. All rights reserved.

machine influence the excitation system output. For such systems, the ceiling voltage is determined considering a specified supply voltage (usually rated voltage) and (if applicable) synchronous machine current.

NOTE 4—For excitation systems employing a rotating exciter, the ceiling voltage is determined at rated speed.

compensated frequency: An approximated angular speed variation signal used for the formation of the speed input signal in some power systems stabilizers. The compensated frequency signal is an approximation of the synchronous generator air-gap voltage frequency that is proportional to the rotor angular speed deviation. The compensated frequency is obtained by calculating frequency of the phasor $Vcp = V_T + jI_T * Xx$ as shown in Figure 1:

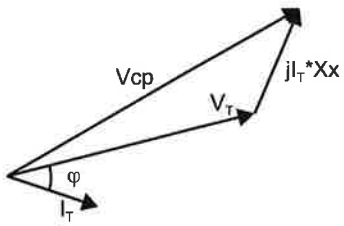

Figure 1—Vcp phasor used for compensated frequency calculations

Xx is typically adjustable and should be related to the effective quadrature reactance applicable for the frequency range of the oscillations. Refer to IEEE Std 1110 [B13].

compound source-rectifier exciter: An exciter whose energy is derived from the currents and potentials of the ac terminals of the synchronous machine and converted to direct current by rectifiers. The exciter includes the power transformers (current and potential), reactors (if required), and rectifiers that may be either noncontrolled or controlled, including gate circuitry. It is exclusive of input control elements.

control error: Difference between the setpoint and the controlled variable. There is a separate control error for each closed-loop mode, such as a voltage control error when operating in AVR.

crowbar: In excitation system usage, a circuit designed to limit the maximum field voltage by providing a low impedance path for the field current. Triggered semiconductors with series resistors or inductors are commonly used. Non-linear resistors may alternatively provide this function.

current boost: An excitation system auxiliary supply that acts to increase the available power supplied to the field winding, typically during fault conditions where the terminal voltage is lower and current is higher than normal.

current boost exciter: An exciter whose energy is derived from currents at the ac terminals of the synchronous machine and converted to direct current by rectifiers. The current boost system output is added directly with a potential source exciter rectifier as a separate rectifier system. The current boost system may include power current transformers and rectifiers that may be either noncontrolled or controlled, including gate circuitry. It is exclusive of input control elements.

NOTE—See Figure A.15 and Figure A.16.

current compensator: A function that acts to influence the voltage regulator action to control voltage at a point other than where the synchronous machine voltage is measured. Specific uses are reactive droop compensation, reactive differential compensation, and line drop compensation.

Copyright © 2022 IEEE. All rights reserved.

dc field breaker: A circuit breaker used to disconnect the excitation system from the generator or exciter field. *See also:* **de-excitation.**

dc generator-commutator exciter: An exciter whose energy is derived from a dc generator. The exciter includes a dc generator with its commutator and brushes. It is exclusive of input control elements. The exciter may be driven by a motor or any type of prime mover, most commonly by the shaft of the synchronous machine.

dc regulator: *See:* **manual control.**

de-excitation: The process of removing the excitation and discharging the field of the synchronous machine, main exciter, or pilot exciter.

NOTE—See IEEE Std 421.6™ [B12].

digital excitation system: A common nomenclature for describing an excitation system for a synchronous machine where some, if not all, of the functionality is implemented in a digital processor. As a minimum, the AVR control function would be expected to be implemented digitally in such a system. It is likely that the limiter functions and optional var/pf or PSS controls are also implemented in the same digital-based control.

NOTE—See Digital Excitation Technology—A Review of Features, Functions and Benefits [B5].

discharge resistor: A resistor that, upon interruption of excitation source current, is connected across the field winding of a synchronous machine or an exciter to limit the transient voltage in the field circuit and to hasten the decay of field current of the machine.

discontinuous excitation control: A control function that acts to rapidly change synchronous machine excitation to a level different than that called for by the voltage regulator and power system stabilizer for a period of time following a system fault or disturbance. Also known as discrete field forcing or transient excitation boosting.

excitation control system: The feedback control system that includes the synchronous machine and its excitation system. The term is used to distinguish the performance of the synchronous machine and excitation system in conjunction with the power system from that of the excitation system alone.

NOTE—See Figure 2.

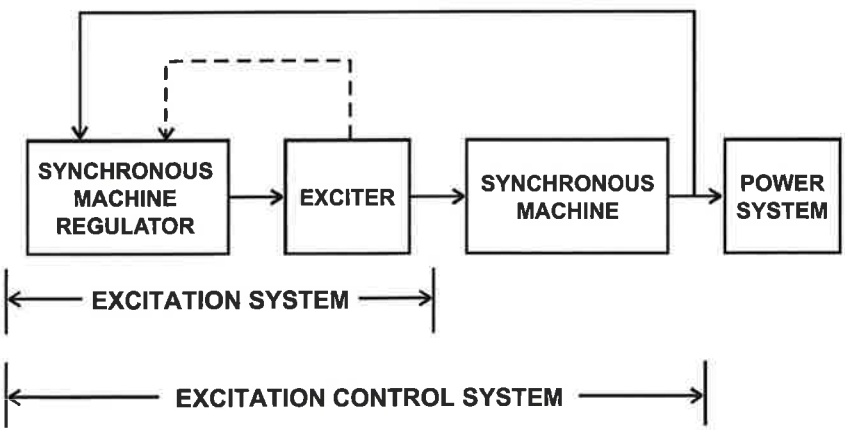

Figure 2—Block diagram of excitation control system

Copyright © 2022 IEEE. All rights reserved.

excitation system: The equipment providing field current for a synchronous machine, including all power, regulating, control, and protective elements.

excitation system duty cycle: An initial operating condition and a subsequent sequence of events of specified duration to which the excitation system will be exposed.

NOTE—The duty cycle usually involves a three-phase fault of specified duration that is located electrically close to the synchronous machine. Its primary purpose is to specify the duty that the excitation system components can withstand without incurring mis-operation or damage.

excitation system negative ceiling voltage Vn: Most negative (direct) voltage, if any, which the excitation system is able to provide from its terminals under defined conditions. *See also:* **ceiling voltage.**

excitation system nominal response: The rate of increase of the excitation system output voltage determined from the excitation system voltage response curve, divided by the rated field voltage. This rate, if maintained constant (curve ac), would develop the same voltage-time area as obtained from the response (curve ab) over the first half-second interval (unless a different time interval is specified).

NOTE 1—Refer to Figure 3.

NOTE 2—The excitation system nominal response shall be determined with the excitation system voltage initially equal to the rated field voltage of the synchronous machine, after which the excitation system ceiling voltage is rapidly attained by introducing a specified voltage error step.

NOTE 3—The excitation system nominal response shall be determined with the excitation system loaded with a resistance equal to the field resistance under rated load conditions and adequate inductance so that voltage drop effects and current and voltage waveforms are reasonably duplicated.

NOTE 4—For excitation systems whose supply depends on the synchronous machine voltage and (if applicable) current, the nature of the power system disturbance and specific design parameters of the excitation system and the synchronous machine influence the excitation system output. For such systems, the excitation system nominal response shall be determined considering a specified supply voltage (usually rated voltage) and (if applicable) synchronous machine current.

NOTE 5—If, for practical considerations, tests can only be made on individual components or the entire excitation system but only at partial or no-load, analytical methods may be used to predict performance with rated field voltage (see NOTE 1).

NOTE 6—For excitation systems employing a rotating exciter, the excitation system nominal response shall be determined at rated speed.

NOTE 7—Not normally used in the specification of static excitation systems. There is a potential conflict if ceiling voltage is also specified.

NOTE 8—The nominal response was also referred to as response ratio.

Copyright © 2022 IEEE. All rights reserved.

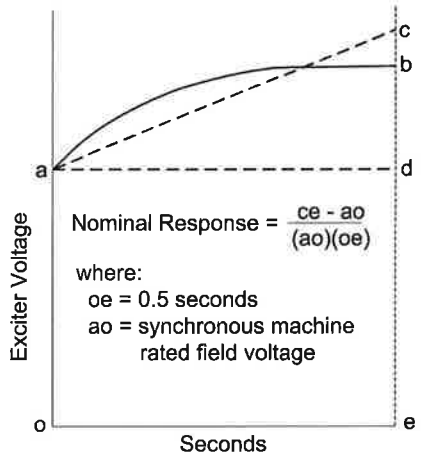

Figure 3—Excitation system nominal response

excitation system on-load negative ceiling voltage V_{nL}: Most negative (direct) voltage, if any, which the excitation system is able to provide at initial current equal to rated field current at rated conditions of the synchronous machine. *See also:* **ceiling voltage**.

excitation system output terminals: The place of output from the equipment comprising the excitation system. These terminals may be identical with the field winding terminals.

excitation system rated current: The direct current at the excitation system output terminals that the excitation system can supply under defined conditions of its operation. This current is at least that value required by the synchronous machine under the most demanding continuous operating conditions (generally resulting from synchronous machine voltage, frequency, and power factor variations).

excitation system rated voltage: The direct voltage at the excitation system output terminals that the excitation system can provide when delivering excitation system rated current under rated continuous load conditions of the synchronous machine with its field winding at 1) 75 °C for field windings designed to operate at rating with a temperature rise of 60 °C or less; or 2) 100 °C for field windings designed to operate at rating with a temperature rise greater than 60 °C.

excitation system stabilizer: A function that serves to modify the voltage regulator forward signal by either series or feedback compensation to improve the dynamic performance of the excitation control system.

excitation system voltage response time: The time in seconds for the excitation voltage to attain 95% of the difference between ceiling voltage and rated field voltage under specified conditions.

exciter: The equipment that provides the field current for the excitation of a synchronous machine.

fault current limiter: A function that acts to prevent the stator current from exceeding a preset value during steady-state operation of the generator with a short-circuit applied to its output. The limiter acts to limit fault current by decreasing excitation. Also known as line current limiter.

field current/voltage limiter: A control function that acts to prevent the field current or voltage from exceeding a preset value. *See also:* **overexcitation limiter**.

field discharge circuit breaker: A circuit breaker having main contacts for energizing and de-energizing the field of a synchronous machine or rotating exciter and having discharge contacts for short-circuiting the field

Copyright © 2022 IEEE. All rights reserved.

through a discharge resistor prior to the opening of the circuit breaker main contacts. The discharge contacts also disconnect the field from the discharge resistor following the closing of the main contacts.

NOTE 1—When used in the main field of a synchronous machine, the circuit breaker is designated as a main field discharge circuit breaker.

NOTE 2—When used in the field circuit of a rotating exciter of the main machine, the circuit breaker is designated as an exciter field discharge circuit breaker. See IEEE Std C37.18 [B14].

field flashing: Momentary application of dc power to the field of a synchronous machine for the purpose of building up terminal voltage.

field forcing: A control action that rapidly drives the field voltage of a synchronous machine in the positive or in the negative direction.

field voltage/field current regulator: A regulator that functions to maintain the field voltage/field current at a predetermined value.

field winding: A winding on either the stationary or the rotating part of a synchronous machine whose sole purpose is the production of the main electromagnetic field of the machine.

field winding terminals: The place of input to the field winding of the synchronous machine. If there are brushes and slip rings (collectors), these are considered to be part of the field winding.

freewheeling diode: A diode connected across the controlled bridge of a static excitation system to provide a path for field current to flow if the normal bridge path is not available. *Syn*: **flyback diode**.

NOTE—Refer to Figure A.19.

high initial response: An excitation system capable of attaining 95% of the difference between ceiling voltage and rated field voltage in 0.1 s or less under specified conditions.

impedance compensator: *See:* **line drop compensator**; **reactive droop compensator**.

inner loop/outer loop control: A cascade control system with two controllers. The controller in the outer loop generates the setpoint for the controller of the inner loop. The inner loop is faster than the outer loop. Examples are a VAR-controller which changes the setpoint of the voltage regulator, where the outer VAR control loop serves as the setpoint or bias for the voltage regulator inner loop.

large signal performance: Response of an excitation control system, excitation system, or elements of an excitation system to signals that are large enough that nonlinearities must be included in the analysis of the response to obtain realistic results.

lead/lag filter: A lead/lag transfer function that introduces a zero/pole pair. It is often used to adjust the frequency response characteristics of the system being controlled. In excitation systems, these filters are often used for phase lead compensation, or high frequency (transient) gain reduction.

NOTE—See Figure 4.

Copyright © 2022 IEEE. All rights reserved.

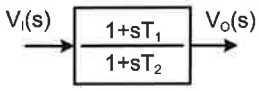

Figure 4—Lead/lag transfer block

line drop compensator: A function that modifies the machine terminal voltage to compensate for the impedance drop to a fixed point external to the synchronous machine terminals.

manual control: In excitation system usage, manual control refers to direct control of the synchronous machine excitation by operator action. *See also:* **field voltage/field current regulator**.

NOTE—Manual control may include open or closed loop control of the exciter output, or any other means that does not directly control the synchronous machine output variables.

no-load field current: The direct current in the field winding of synchronous machine required to produce rated voltage at no-load and rated speed.

no-load field voltage: The voltage required across the terminals of the field winding of the synchronous machine under conditions of no-load, rated speed, and rated terminal voltage, and with the field winding at 25 °C.

non-windup limiter: Control element with an output limitation that allows the output to change immediately on a change in direction of the input.

NOTE—Reference Annex E of IEEE Std 421.5.

null balance: A circuit or action designed to match the output of the automatic voltage regulator and the manual control to minimize the transient upon transfer of regulator control. *See also:* **bumpless transfer**.

overexcitation limiter (OEL): A control function that limits the field current of the synchronous machine or excitation equipment to permissible values with regard to thermal overload. Action may be immediate or time delayed. Also called a maximum excitation limiter. *See also:* **field current/voltage limiter**.

permanent magnet generator (PMG): An auxiliary synchronous machine with permanent magnet field. Used as a pilot exciter to supply the power requirements of a portion of the excitation system. Also known as permanent magnetic alternator (PMA).

NOTE—See Figure A.2, Figure A.4, and Figure A.6.

pilot exciter: The equipment providing the source of field power for the excitation of another exciter.

potential source-rectifier exciter: An exciter whose energy is derived from a stationary ac potential source and converted to direct current by rectifiers. The exciter includes the power potential transformers and power rectifiers that may be either noncontrolled or controlled, including gate circuitry. It is exclusive of input control elements. The source of ac power may come from the machine terminals or from a station auxiliary bus or a separate winding within the synchronous machine.

power current transformer: A transformer in a compound source-rectifier excitation system that transfers electrical energy from the synchronous machine armature current to the excitation system at a magnitude and phase relationship required by the excitation system. Also used in current boost configuration.

NOTE—See Figure A.7, Figure A.8, Figure A.11, Figure A.12, Figure A.14, Figure A.15, and Figure A.16.

Copyright © 2022 IEEE. All rights reserved.

power factor controller: A control function that acts through the adjuster or directly into the summing point to modify the voltage regulator setpoint to maintain the synchronous machine steady-state power factor at a predetermined value.

power factor limiter: A control function that limits the reactive power output of the synchronous machine to a predetermined or permissible power factor value. Action may be immediate or time delayed and will increase or decrease the reactive power output of the machine. *Syn*: **PF limiter**.

power factor regulator: A synchronous machine regulator that functions to maintain the power factor at a predetermined value. Commonly used on synchronous motors. *See also:* **power factor controller**.

power potential transformer (PPT): A transformer in a potential source-rectifier excitation system that transfers electrical energy either from the machine terminals or from an auxiliary bus to the excitation system at a magnitude level required by the excitation system. Also, a transformer in a compound source-rectifier excitation system that transfers electrical energy from the synchronous machine armature terminals to the excitation system at a magnitude and phase relationship required in the excitation system.

power system stabilizer (PSS): A function that provides an additional input to the voltage regulator to improve the damping of power system oscillations.

NOTE—A number of different quantities may be used as input to the power system stabilizer, such as shaft speed, frequency, compensated frequency, electric power, etc., or a combination of these signals.

ramp tracking filter: A multi-stage low pass filter used in integral of accelerating power type PSS. It is provided to suppress high frequency components of compensated frequency channel (e.g., noise or HF-torsional components). It also has to pass the frequency components related to large power variations (power gradient) that may be applied to the synchronous generator (e.g., during emergency fuel valve closing).

This terminology originated in the type PSS2A, where it is used to produce zero steady state error due to a ramping input of electrical power.

It is formed by a concatenation of lead/lag filters with N-order for the numerator (lead stages) and N × M order for the denominator (lag stages) as shown in Figure 5.

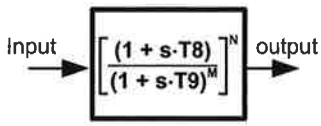

Figure 5—Ramp tracking filter used in integral of accelerating power PSSs

For proper implementation, the following relationship shall be respected: T8 = M × T9

Examples T8 = 0.6 s; T9 = 0.15 s, M = 4; N = 1 or T8 = 0.3 s; T9 = 0.15 s; M = 2; N = 4

rated field current: The direct current in the field winding of the synchronous machine when operating at rated voltage, current, power factor, and speed. Rated field current of any other rotating exciters is based on the synchronous machine rated field current at a specified temperature.

rated field voltage: The voltage required across the terminals of the field winding under rated continuous load conditions of the synchronous machine with its field winding at 1) 75 °C for field windings designed to operate at rated load with a temperature rise of 60 °C or less; or 2) 100 °C for field windings designed to operate at

Copyright © 2022 IEEE. All rights reserved.

rated load with a temperature rise greater than 60 °C. Rated field voltage of any other rotating exciter is based on the synchronous machine rated field current at a specified temperature.

reactive differential compensator: A function used to obtain reactive current sharing among synchronous machines operating in parallel without causing reduction of terminal voltage. Requires interconnection of voltage regulators or current transformers of the machines.

reactive droop compensator: A function that causes a reduction of terminal voltage proportional to reactive current. Generally used to obtain reactive current sharing among synchronous machines operating in parallel.

regulated voltage: The synchronous machine terminal voltage as measured at the terminals of the excitation system. For this definition, any sensing voltage transformers are considered part of the excitation control system, but not part of the excitation system, as shown in Figure 2.

reversible excitation system: An excitation system providing compulsory change of sign of magnetic flux, created by a winding or excitation windings of a synchronous machine.

setpoint: The reference signal to which the controlled variable is to be compared.

shaft voltage suppressor: A filter device, usually consisting of a symmetrical RC network, connected from each side of the field to ground. The filter is designed to eliminate common mode voltage that is caused by power semiconductors used to supply the field circuit. The filter minimizes shaft voltages that would otherwise lead to shaft currents, which could damage bearing surfaces.

small-signal performance: The response of an excitation control system, excitation system, or elements of an excitation system to signals that are small enough that nonlinearities can be disregarded in the analysis of the response, and operation can be considered to be linear.

static exciter: An exciter that derives its power from one or more stationary electrical sources, employing stationary rectifiers to deliver direct current to the main field of the synchronous machine.

stator current limiter (SCL): A function that acts to prevent the stator current from exceeding a preset value. If the generator is operating overexcited, the limiter will decrease excitation, while in underexcited operation the limiter increases excitation.

synchronous machine regulator: A general term applied to a regulator that couples the output variables of a synchronous machine to control the exciter output through forward and feedback elements for the purpose of regulating the synchronous machine output variables. *See also:* **automatic voltage regulator, var regulator,** and **power factor regulator**.

terminal voltage limiter: A function that acts to prevent the terminal voltage from exceeding a preset level.

underexcitation limiter (UEL): A function that either overrides the voltage regulator action (takeover type) or adds to terminal voltage setpoint (summing type) to maintain synchronous machine excitation such that synchronous machine output remains above a preset level. Various terms have been applied, often descriptive of the measured variable: minimum excitation limiter, underexcited reactive ampere limit, and rotor angle limiter.

var controller: A function that acts through the adjuster or directly into the summing point to modify the voltage regulator setpoint to maintain the synchronous machine steady-state reactive power at a predetermined value.

Copyright © 2022 IEEE. All rights reserved.

var limiter: A control function that limits the reactive power output of the synchronous machine to a predetermined or permissible value. Action may be immediate or time delayed. Also called reactive power limiter.

var regulator: A synchronous machine regulator that functions to maintain the reactive component of power at a predetermined value. Commonly used on synchronous motors. *See also:* **var controller**.

voltage following machines: Machines which would not be expected to aid in the regulation of system voltage, but whose voltage would tend to be expected to follow the variations of incoming system voltage. These machines will typically be the ones which could justifiably be selected to regulate vars or PF.

NOTE—See Hurley, et al., [B9].

voltage regulation accuracy: The difference between no load and full load regulated voltage, expressed in percent of the full load value of the regulated voltage, within which the excitation system will hold the regulated voltage of the synchronous machine during steady or gradually changing conditions, in the absence of the action of any current compensators or limiters. Unless otherwise specified, the range will be assumed from no-load to rated kVA and power factor.

$$\text{Regulation} = \left[\left(\frac{(Vnl - Vfl)}{Vfl}\right)\right] \times 100\% \tag{1}$$

voltage regulator: A synchronous machine regulator that functions to maintain the terminal voltage of a synchronous machine at a predetermined value, or to vary it according to a predetermined plan. *See also:* **automatic voltage regulator (AVR)**.

voltage supporting machines: Machines which would be expected to aid in the regulation of system voltage.

NOTE—See Hurley, et al., [B9].

volts per hertz limiter: A function that acts to prevent the ratio of terminal voltage to frequency from exceeding a preset level. The purpose is to prevent excessive magnetic flux in the synchronous machine and connected transformers.

washout filter: A first order high pass filter commonly applied for the suppression of steady state signals for the formation of stabilizing signal in a PSS. The time constant T_w is named the washout time constant.

NOTE—See Figure 6.

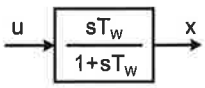

IF (T_W= 0) set x = u to bypass the block

Figure 6—Washout block

Copyright © 2022 IEEE. All rights reserved.

Annex A

(normative)

Typical elements and components of excitation control systems applied to synchronous machines for bulk power

The following figures are included only to aid in the understanding of the excitation control system and to illustrate some typical systems terminology referenced and defined in this standard.

Figure A.1 is a generalized block diagram identifying excitation system control and protective elements. The symbols used in Figure A.1 are taken directly from IEEE Std 421.5 [B20] and "Excitation System Models for Power System Stability Studies" [B21] and are defined in Table A.1.

Table A.2 shows some examples of excitation system configurations and the corresponding simulation model types used in IEEE Std 421.5 [B20] and "Excitation System Models for Power System Stability Studies" [B21]. Table A.2 also shows a further breakdown of the three basic exciter types, as well as the source of exciter power.

Figure A.2 through Figure A.16 show typical configurations of the principal excitation systems currently in use. These single line diagrams identify the source of the excitation power with control circuits shown for clarity and general understanding.

Figure A.17 through Figure A.20 represent the typical three-phase rectifier bridge circuits that may be used in excitation control systems. The rectifier bridge circuit shown in Figure A.3 and Figure A.6 through Figure A.15 as a single rectifier or controlled rectifier in a block. These rectifiers are the main source of the field current for an exciter or generator main field.

The potential source and compound source systems have *power* PTs and *power* CTs. These transformers supply power to the rectifier bridge circuits; they should not be confused with the instrument transformers supplying feedback to the automatic control circuit or used for protection and metering functions.

Figure A.3, and Figure A.6 through Figure A.8 power stage are shown with a thyristor symbol but other electronic switching device (BJT, MOSFET, IGBT…etc.) may be employed to convert its supply into a variable dc voltage applied to the exciter field.

Table A.1—Nomenclature for Figure A.1

E_{FD}	Synchronous machine field voltage
I_{FD}	Synchronous machine field current
V_F	Excitation system stabilizer feedback signal
V_{FE}	Signal proportional to exciter field current
V_L	Limiters and protective elements feedback
V_R	Regulator output
V_S	Power system stabilizer output
V_{SI}	Power system stabilizer inputs (shaft speed, frequency, synchronous machine electric power, and others)
V_T,I_T	Synchronous machine terminal voltage and current, respectively
V_{REF}	Voltage reference setpoint

Copyright © 2022 IEEE. All rights reserved.

Table A.2—Examples of excitation system configuration

Exciter category	Type of exciter	Exciter power source	Figure
DC	DC generator commutator exciter	Motor-generator set or synchronous machine shaft	A.2, A.4, A.3, A.5
AC	Alternator-stationary noncontrolled rectifier	Synchronous machine shaft	A.7
AC	Alternator-rotating noncontrolled rectifier (brushless)	Synchronous machine shaft	A.6
AC	Alternator-stationary controlled rectifier	Synchronous machine shaft	A.8
ST	Potential source controlled rectifier	Synchronous machine voltage or auxiliary bus voltage	A.9, A.10
ST	Compound source noncontrolled rectifier	Synchronous machine voltage and current	A.11, A.14
ST	Compound source controlled rectifier	Synchronous machine voltage and current	A.12, A.13, A.15, A.16

NOTE—Please refer to the most recent IEEE Std 421.5 for applicable simulation models.

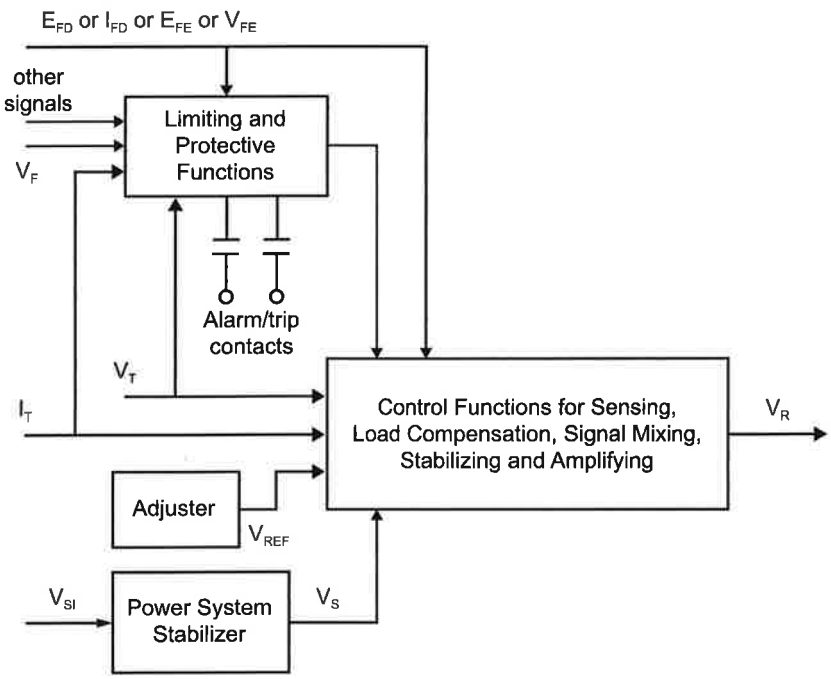

Figure A.1—Automatic control functions

Copyright © 2022 IEEE. All rights reserved.

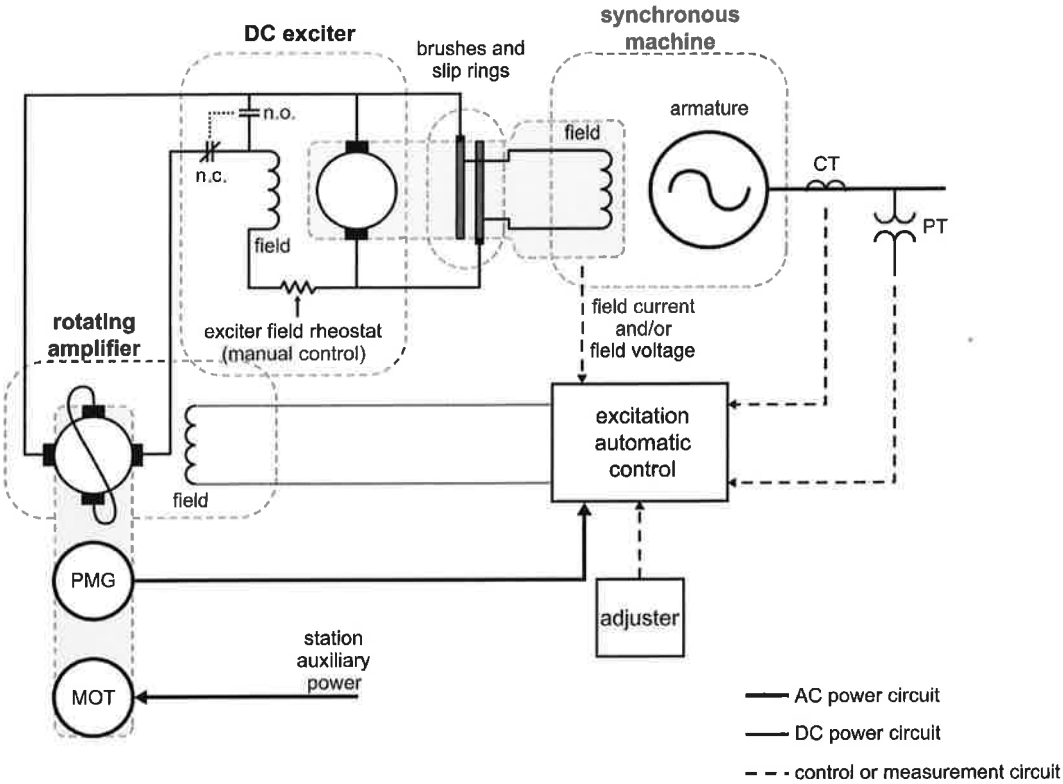

Figure A.2—DC generator-commutator exciter with rotating amplifier

Copyright © 2022 IEEE. All rights reserved.

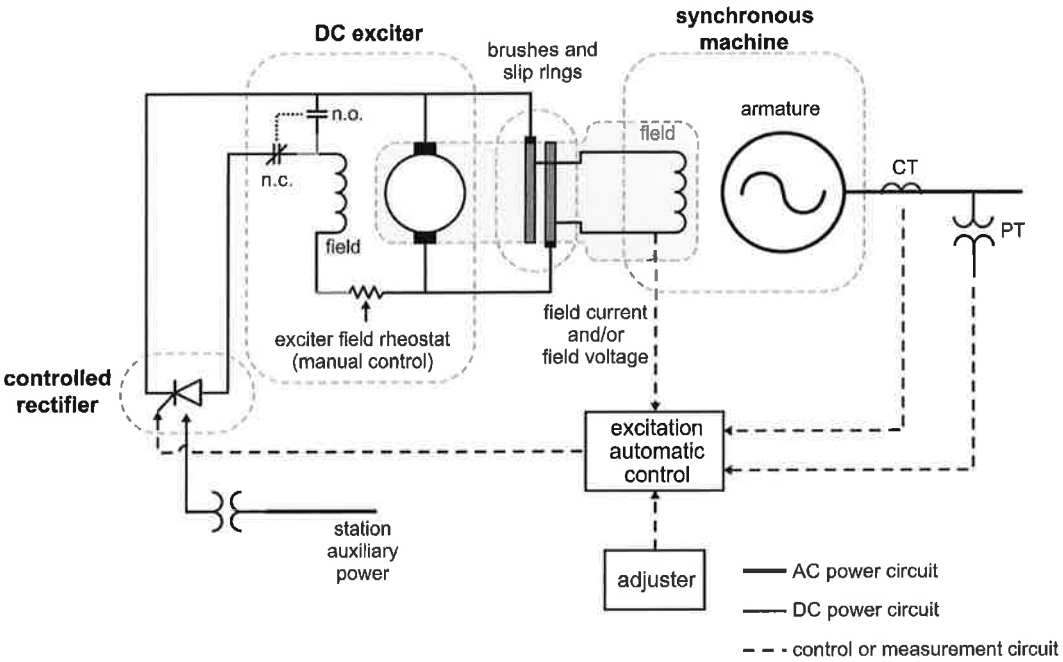

Figure A.3—DC generator-commutator exciter with static amplifier

Copyright © 2022 IEEE. All rights reserved.

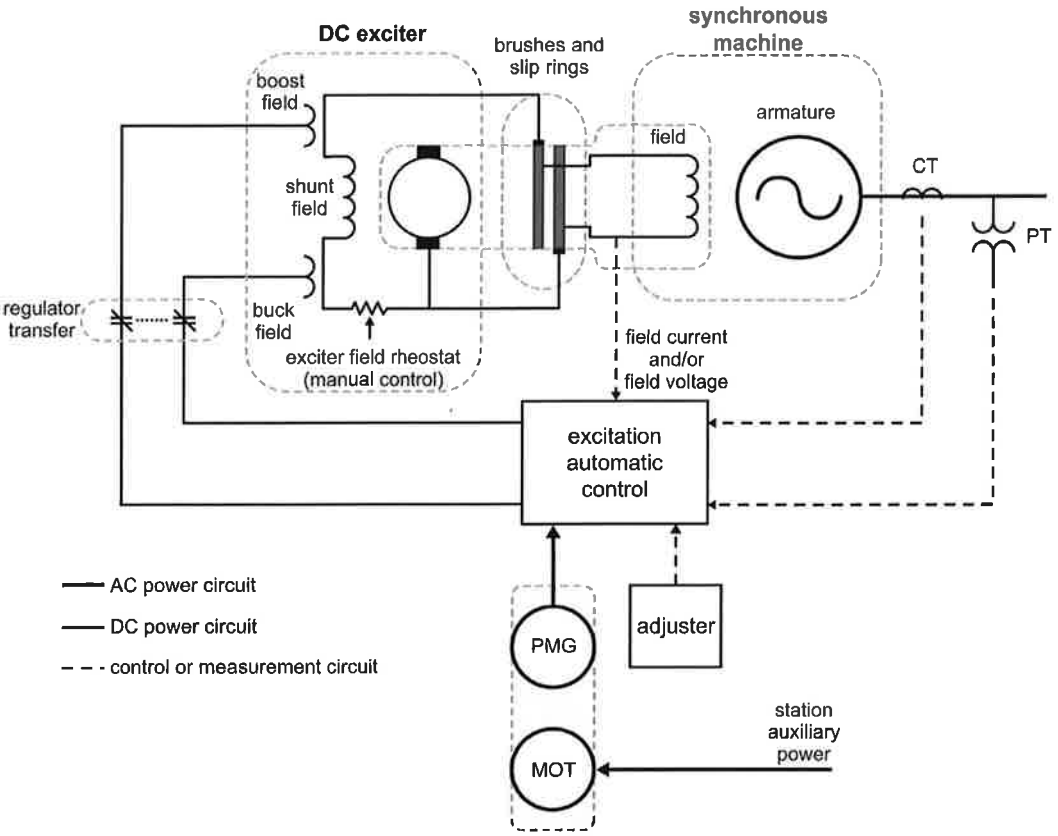

Figure A.4—DC generator-commutator exciter with continuously acting regulator employing static amplifiers

Copyright © 2022 IEEE. All rights reserved.

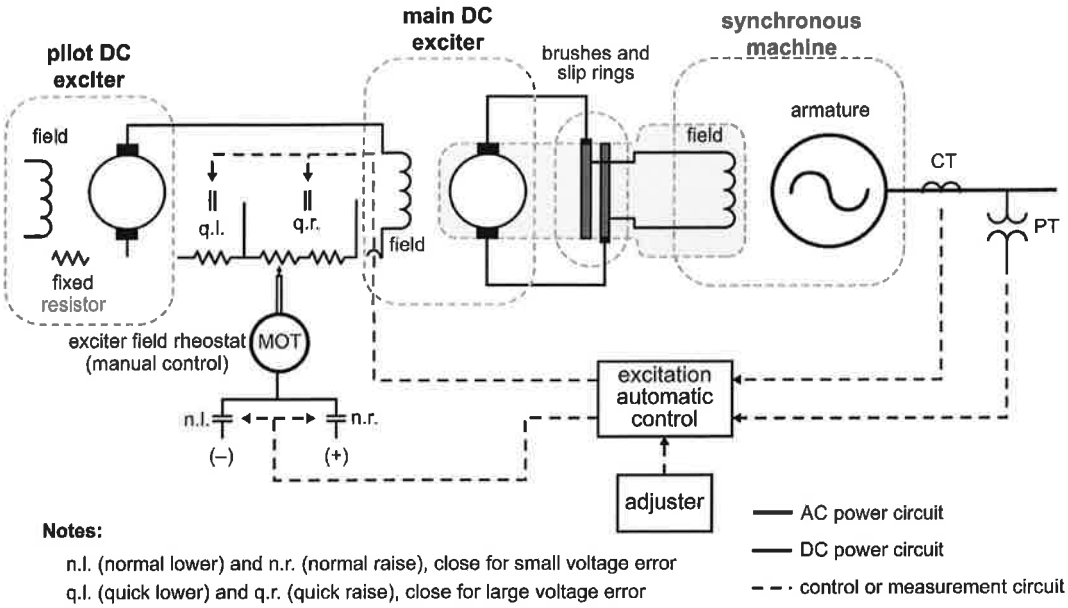

Figure A.5—DC generator commutator exciter separately excited with noncontinuously acting rheostatic regulator

Copyright © 2022 IEEE. All rights reserved.

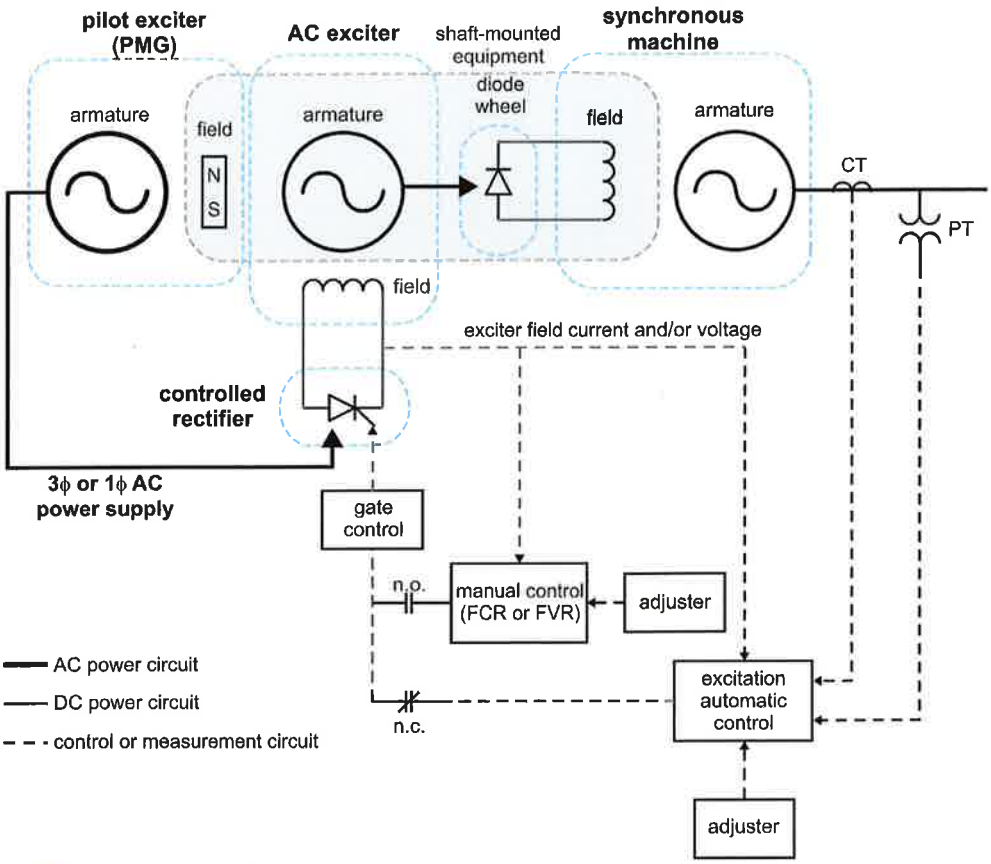

NOTE—Figure A.6 shows a PMG power source for the thyristor bridge. Other acceptable power sources are the generator terminals, station service.

Figure A.6—Alternator-rectifier exciter employing rotating noncontrolled rectifiers (brushless exciter)

Copyright © 2022 IEEE. All rights reserved.

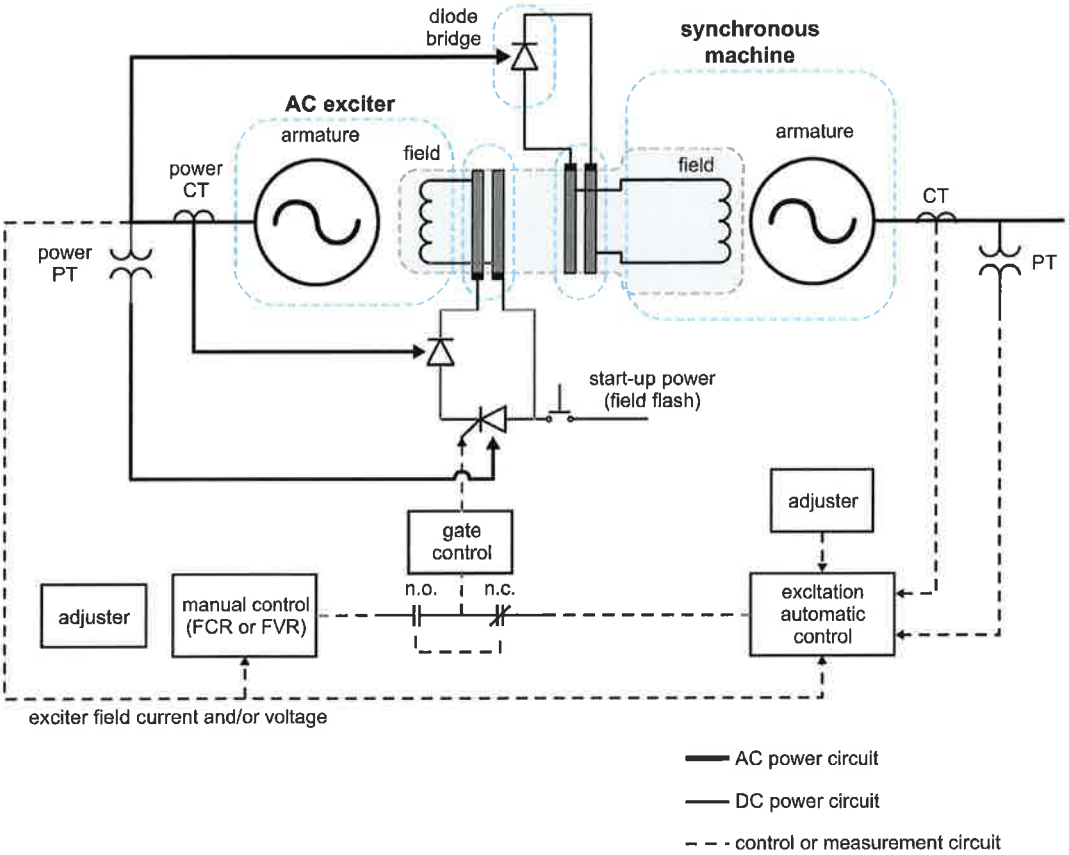

NOTE—Field flashing is typically required when the ac source is derived from the generator or ac exciter terminal voltage.

Figure A.7—Alternator-rectifier exciter employing stationary noncontrolled rectifiers

Copyright © 2022 IEEE. All rights reserved.

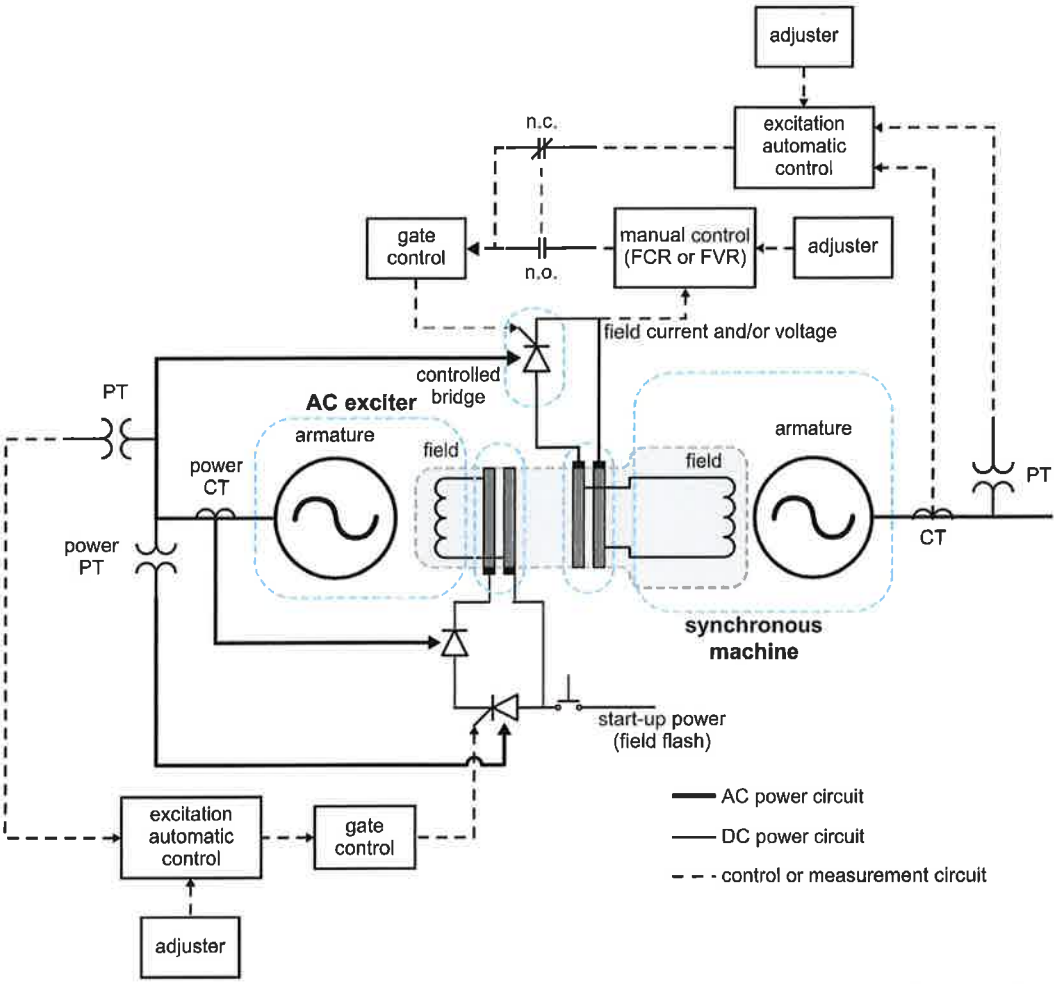

NOTE—Field flashing is typically required when the ac source is derived from the generator or ac exciter terminal voltage.

Figure A.8—Alternator-rectifier exciter employing stationary controlled rectifiers

Copyright © 2022 IEEE. All rights reserved.

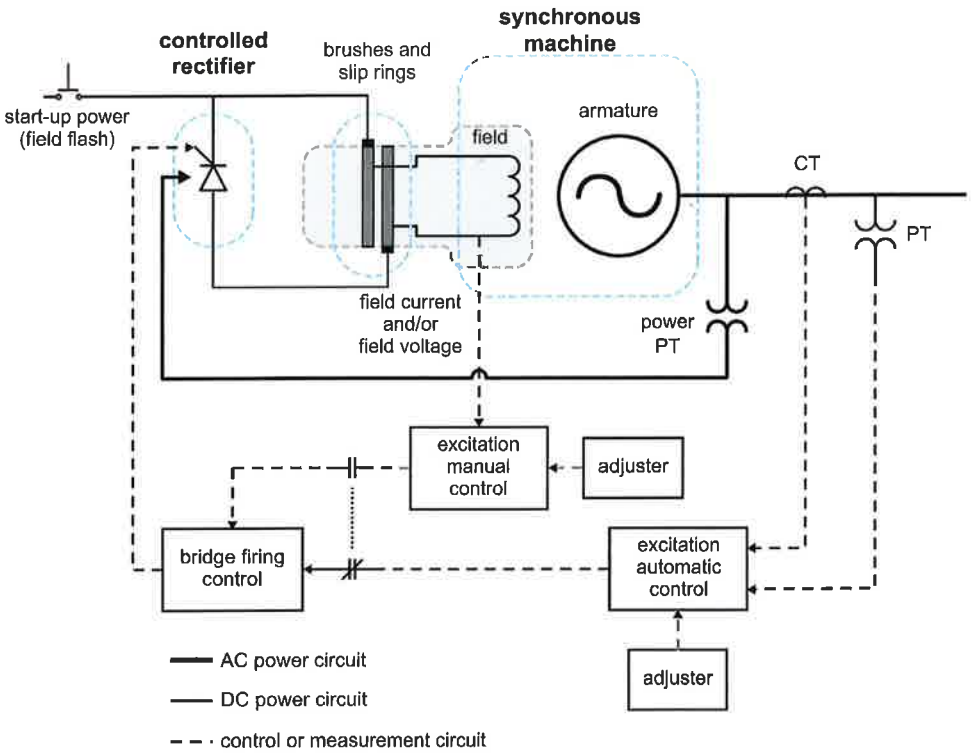

NOTE—Field flashing is typically required when the ac source is derived from the generator or ac exciter terminal voltage.

Figure A.9—Potential source

Copyright © 2022 IEEE. All rights reserved.

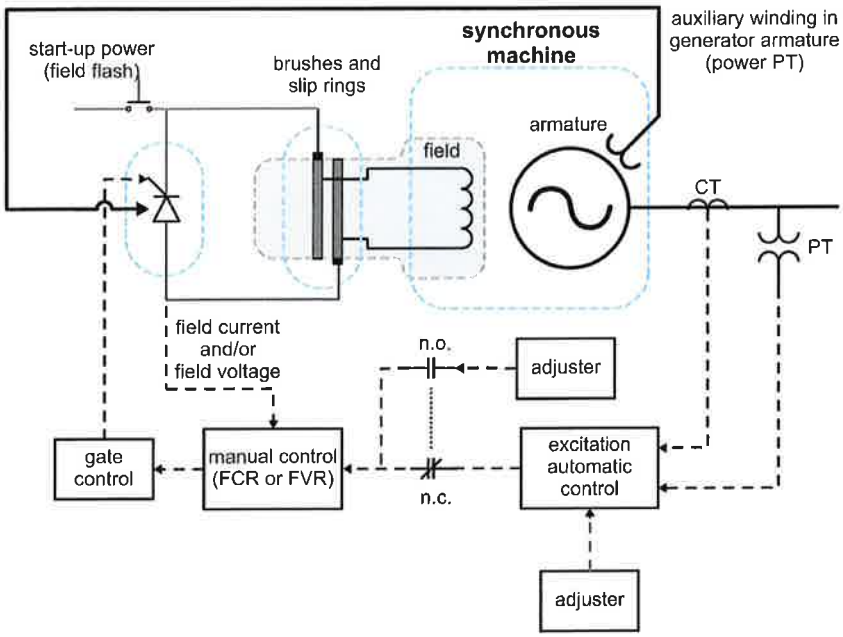

Figure A.10—Potential source rectifier exciter employing controlled rectifiers (with generator auxiliary power source)

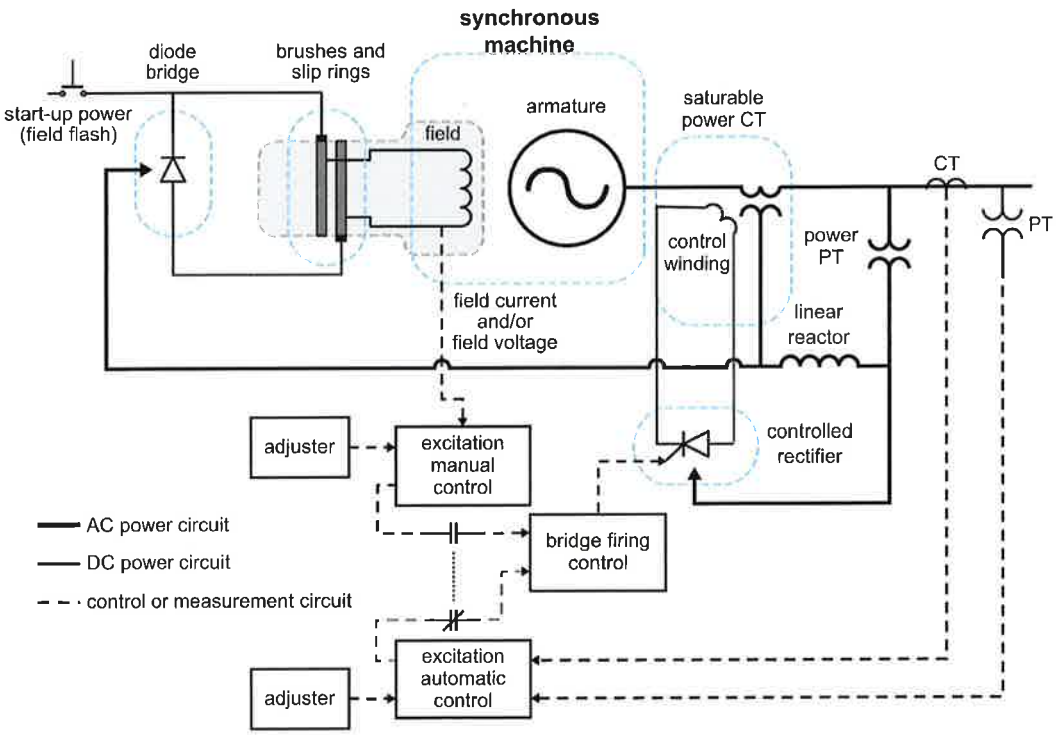

Figure A.11—Compound source-rectifier exciter employing noncontrolled rectifiers

Copyright © 2022 IEEE. All rights reserved.

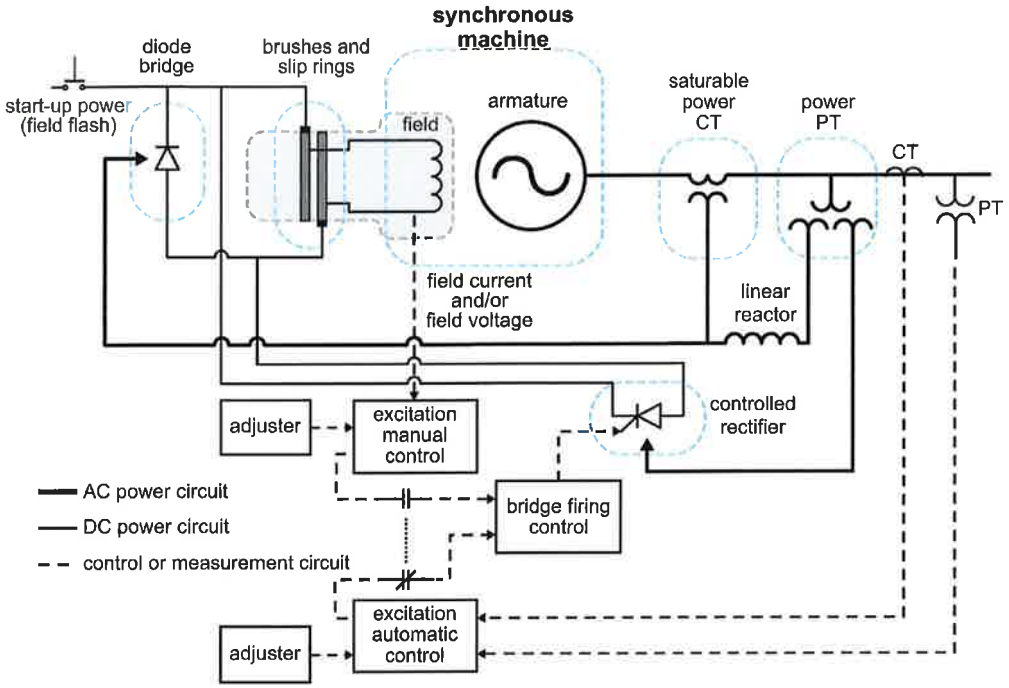

Figure A.12—Compound source-rectifier exciter employing controlled rectifiers

Copyright © 2022 IEEE. All rights reserved.

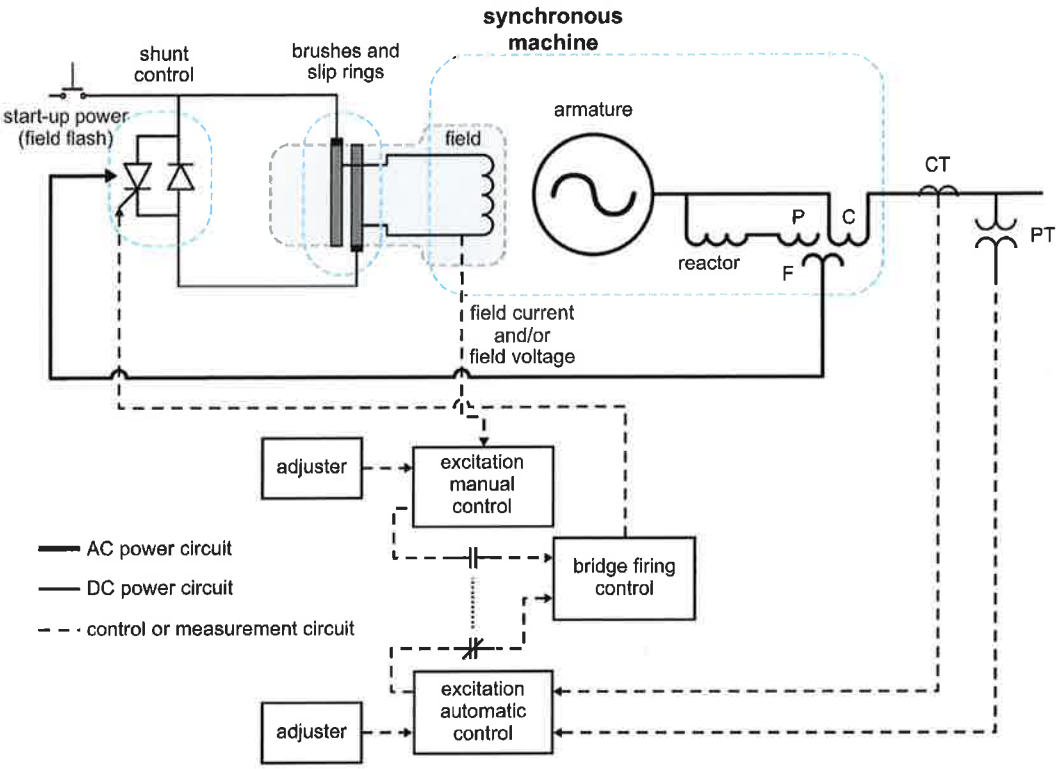

Figure A.13—Compound source-rectifier exciter employing shunt controlled rectifiers

Copyright © 2022 IEEE. All rights reserved.

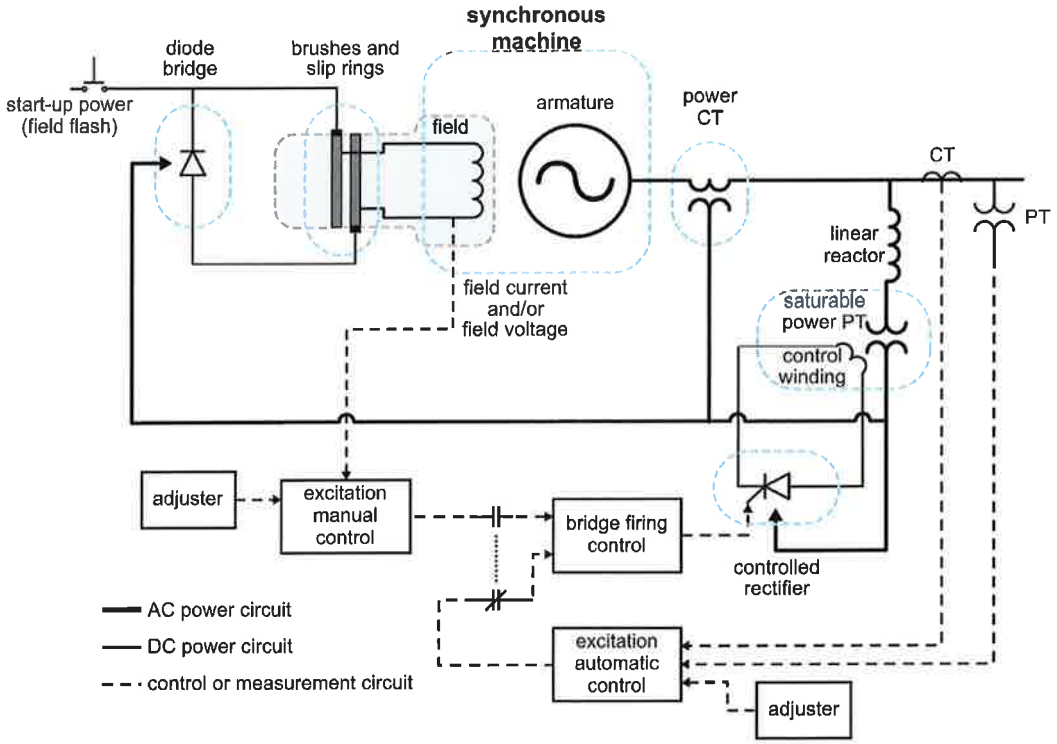

Figure A.14—Compound source-rectifier exciter employing noncontrolled rectifiers and saturable potential transformers

Copyright © 2022 IEEE. All rights reserved.

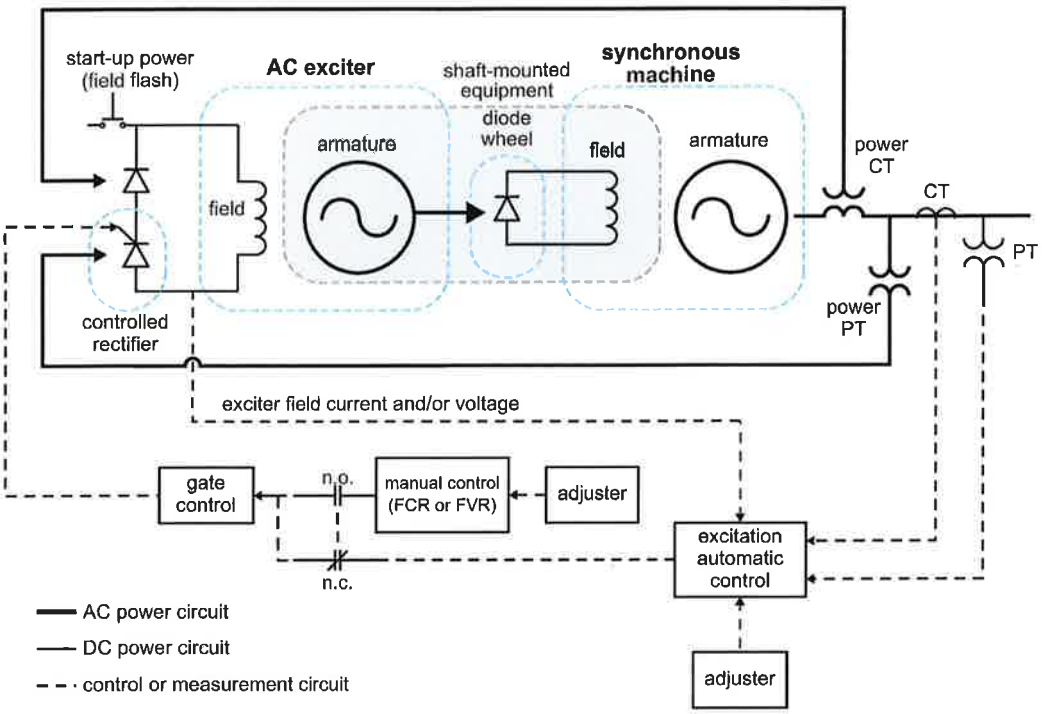

Figure A.15—Rotating exciter rectifier with current boost excitation system

Copyright © 2022 IEEE. All rights reserved.

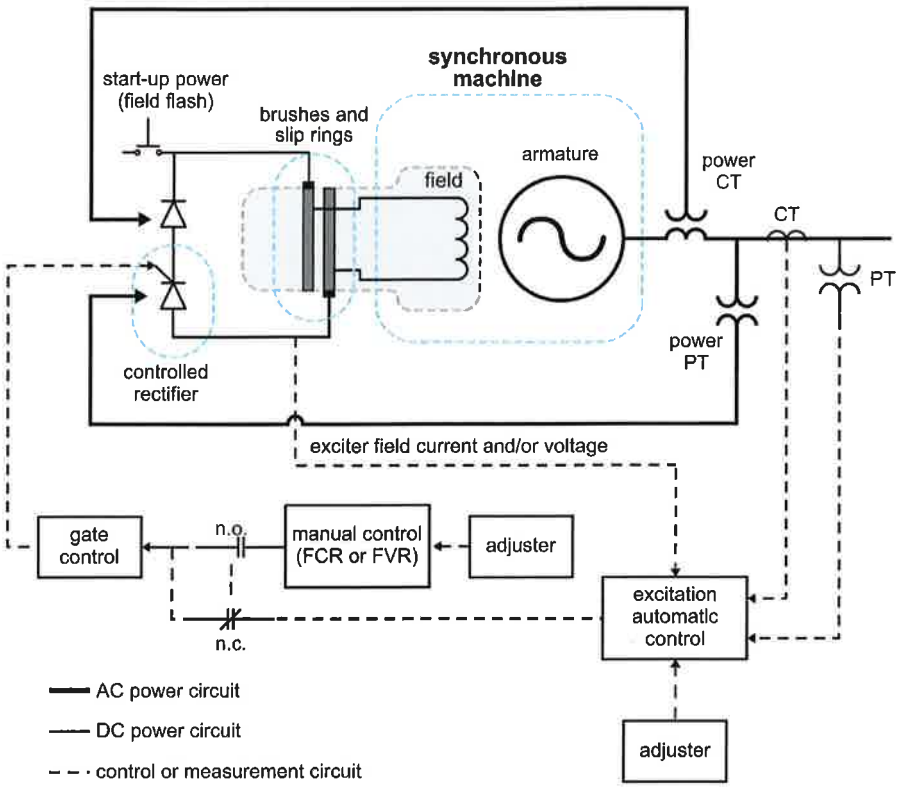

Figure A.16—Potential source exciter with current boost excitation system

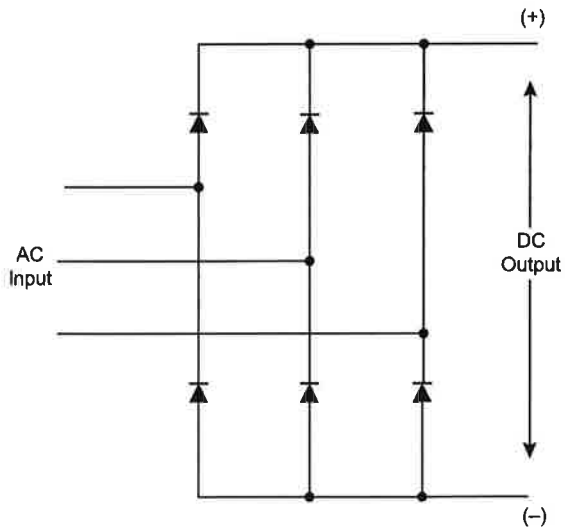

Figure A.17—Three-phase full wave diode bridge (noncontrolled rectifier)

Copyright © 2022 IEEE. All rights reserved.

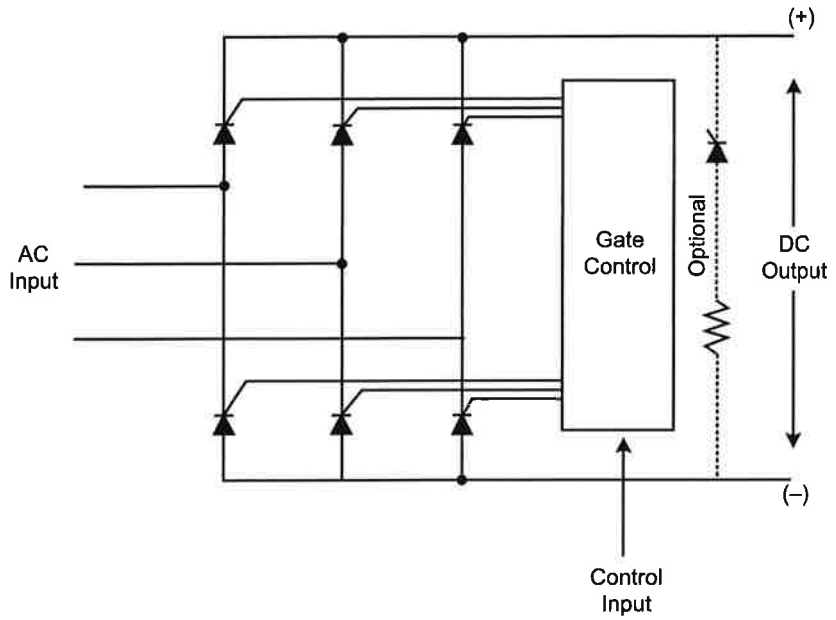

Figure A.18—Three-phase full wave thyristor bridge (controlled rectifier)

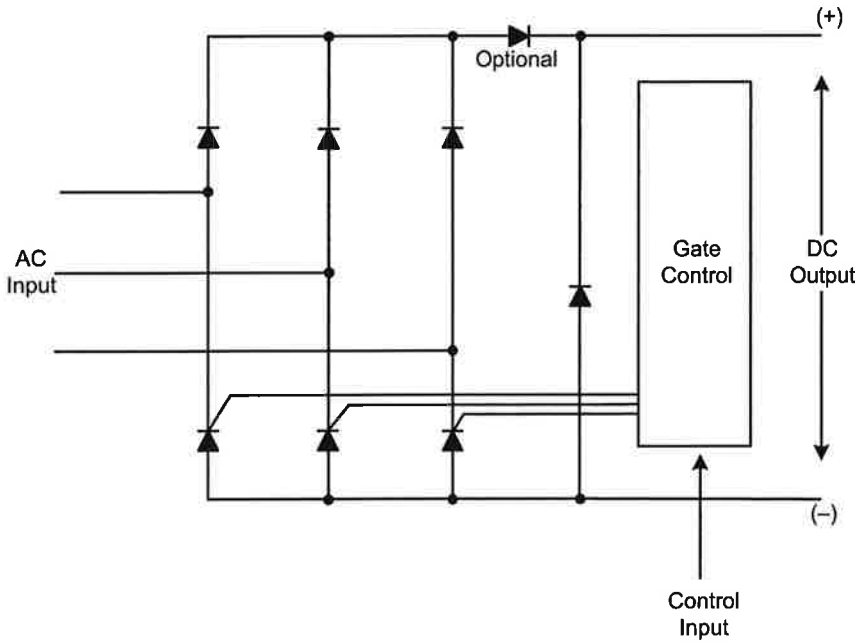

Figure A.19—Three-phase full wave hybrid bridge (hybrid controlled rectifier)

Copyright © 2022 IEEE. All rights reserved.

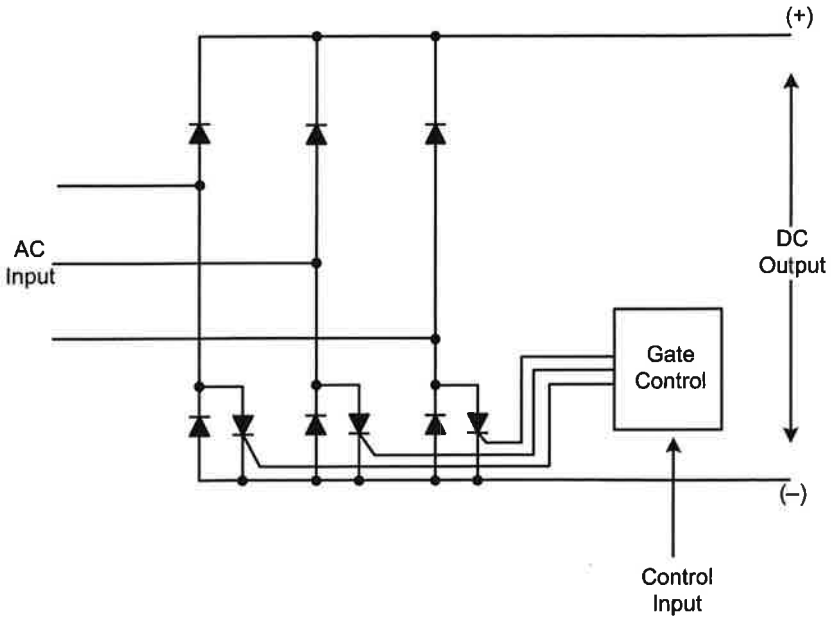

Figure A.20—Three-phase full wave hybrid bridge (shunt controlled rectifier)

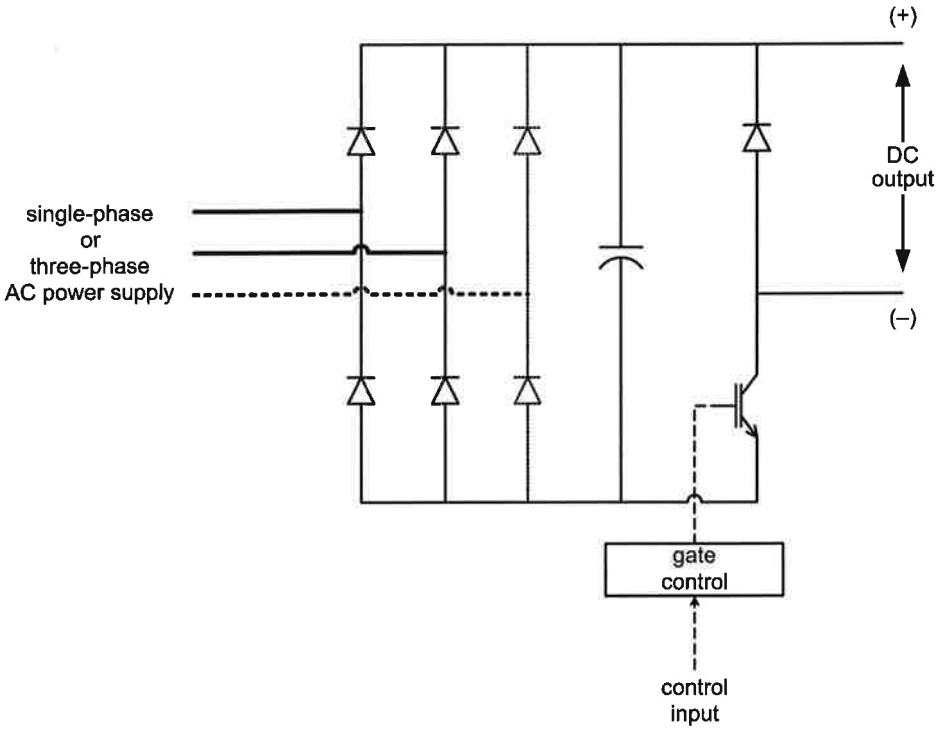

Figure A.21—IGBT-based single-quadrant bridge

Copyright © 2022 IEEE. All rights reserved.

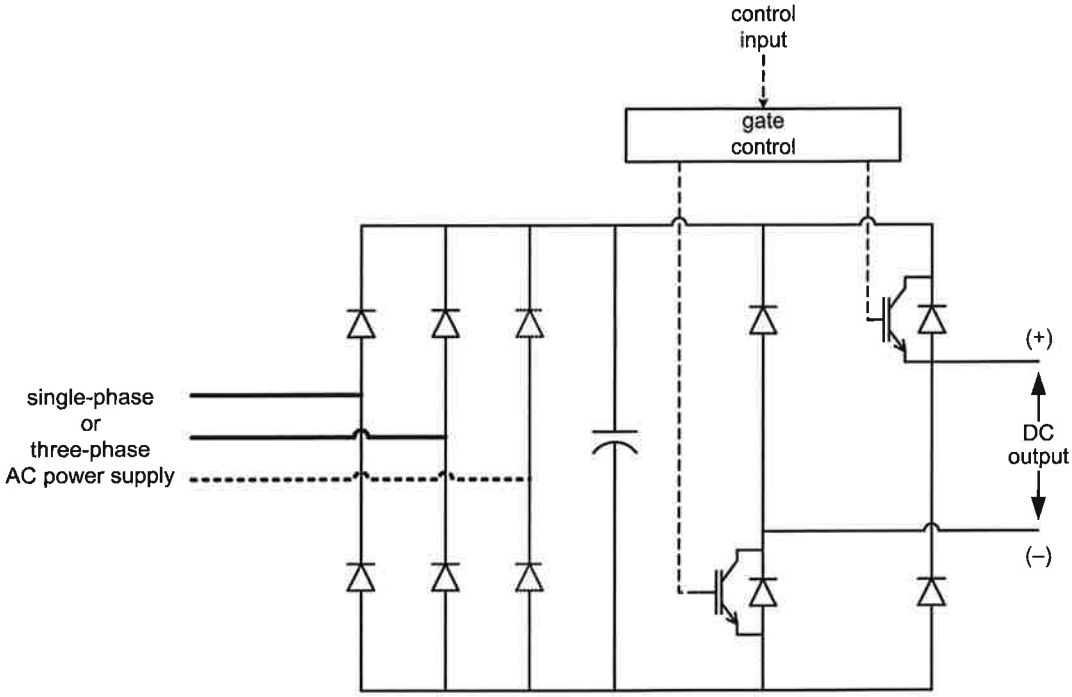

Figure A.22—IGBT-based dual quadrant bridge

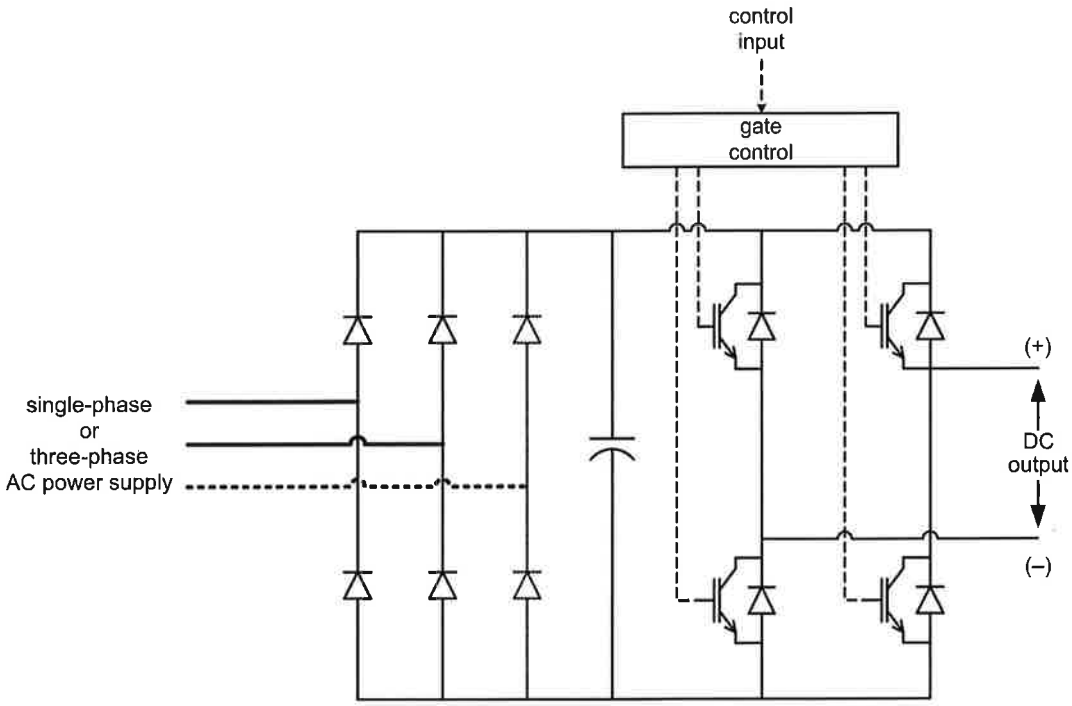

Figure A.23—IGBT-based four-quadrant bridge

Copyright © 2022 IEEE. All rights reserved.

Annex B

(informative)

Bibliography

Bibliographical references are resources that provide additional or helpful material but do not need to be understood or used to implement this standard. Reference to these resources is made for informational use only.

[B1] Barnes, H.C., J.A. Oliver, A.S. Rubenstein, and M. Temoshok, "Alternator-Rectifier Exciter for Cardinal Plant 724-MVA Generator," IEEE Transactions on Power Apparatus and Systems, vol. PAS-87, Apr, pp. 1189–1198, 1968, http://dx.doi.org/10.1109/TPAS.1968.292098.

[B2] Chambers, G.S., A.S. Rubenstein, and M. Temoshok, "Recent Developments in Amplidyne Regulator Excitation Systems for Large Generators," AIEE Trans. Power App. Syst., vol. 80, pp. 1066–1072, 1961, http://dx.doi.org/10.1109/AIEEPAS.1961.4501212.

[B3] Cotzas, G.M., M.L. Crenshaw, and G.L. Richardson, "GENERREX-PPS (Potential Power Source) Excitation System for Wisconsin Power and Light," Edgewater 5, Proceedings of the Forty-Third American Power Conference, Apr. 1981.

[B4] Cotzas, G.M., K.F. Drexler, J.J. Dvorscak, and R.L. Gerlitz, "Descriptions and Tests of the GENERREX Excitation System for Large Steam Turbine-Generators," IEEE Transactions on Power Apparatus and Systems, vol. PAS-95, May/June, pp. 803–810, 1976, http://dx.doi.org/10.1109/T-PAS.1976.32164.

[B5] Digital Excitation Applications Task Force of the Excitation System Subcommittee, "Digital Excitation Technology—A Review of Features, Functions and Benefits," IEEE Transactions on Energy Conversion, vol. 12, no. 3, pp. 255–258, September 1997, http://dx.doi.org/10.1109/60.629711.

[B6] Digital Excitation Task Force of the Equipment Working Group, "Computer Models for Representation of Digital-Based Excitation Systems," IEEE Transactions on Energy Conversion, vol. 11, no. 3, pp. 609–615, September 1996.

[B7] Dillman, T.L., F.W. Keay, C. Raczkowsi, J.W. Skooglund, and W.H. South, "Brushless Excitation," IEEE Spectrum, Mar, pp. 58–66, 1972, http://dx.doi.org/10.1109/MSPEC.1972.5218751.

[B8] Domeratzky, L.M., A.S. Rubenstein, and M. Temoshok, "A Static Excitation System for Industrial and Utility Steam Turbine-Generators," AIEE Trans. Power App. Syst., vol. 80, Feb, pp. 1072–1077, 1962.

[B9] Hurley, J.D., L.N. Bize, and C.R. Mummert, "The Adverse Effects of Excitation System Var and Power Factor Controllers," Paper PE-387-EC-0-12-1997, http://dx.doi.org/10.1109/60.815117.

[B10] IEEE Std 421.2™, IEEE Guide for Identification, Testing, and Evaluation of the Dynamic Performance of Excitation Control Systems.[7,8]

[B11] IEEE Std 421.4™, IEEE Guide for the Preparation of Excitation System Specifications.

[B12] IEEE Std 421.6™, IEEE Recommended Practice for the Specification and Design of Field Discharge Equipment for Synchronous Machines.

[7]The IEEE standards or products referred to in this clause are trademarks of The Institute of Electrical and Electronics Engineers, Inc.
[8]IEEE publications are available from The Institute of Electrical and Electronics Engineers, 445 Hoes Lane, Piscataway, NJ 08854, USA (https://standards.ieee.org/).

Copyright © 2022 IEEE. All rights reserved.

[B13] IEEE Std 1110™, IEEE Guide for Synchronous Generator Modeling Practices and Parameter Verification with Applications in Power System Stability Analyses.

[B14] IEEE Std C37.18™-1979 (Reaff 1996), IEEE Standard Enclosed Field Discharge Circuit Breakers for Rotating Electric Machinery.

[B15] IEEE Std C50.12™, IEEE Standard for Salient-Pole 50 Hz and 60 Hz Synchronous Generators and Generator/Motors for Hydraulic Turbine Applications Rated 5 MVA and Above.

[B16] IEEE Std C50.13™, IEEE Standard for Cylindrical-Rotor 50 Hz and 60 Hz Synchronous Generators Rated 10 MVA and Above.

[B17] IEEE Task Force on Excitation Limiters, "Recommended Models for Overexcitation Limiting Devices," IEEE Transactions on Energy Conversion, vol. 10, no. 4, pp. 706–713, December 1995, http://dx.doi.org/10.1109/60.475843.

[B18] IEEE Task Force on Excitation Limiters, "Underexcitation Limiter Models for Power System Stability Studies," IEEE Transactions on Energy Conversion, vol. 10, no. 3, pp. 524–531, September 1995, http://dx.doi.org/10.1109/60.464877.

[B19] IEEE Tutorial Course, "Power System Stabilization Via Excitation Control," 81-EHO 175-0 PWR.

[B20] IEEE Working Group of the Excitation Subcommittee, "Computer Representation of Excitation Systems," IEEE Transactions on Power Apparatus and Systems, June, pp. 1460–1464, 1968.

[B21] IEEE Working Group on Computer Modelling of Excitation Systems, "Excitation System Models for Power System Stability Studies," IEEE Transactions on Power Apparatus and Systems, vol. PAS-100, no. 2, pp. 494–509, February 1981, http://dx.doi.org/10.1109/TPAS.1981.316906.

[B22] Keay, F.W. and W.H. South, "A Solid-State Regulator for Electric Utility Applications," IEEE Transactions on Power Apparatus and Systems, vol. PAS-90, no. 4, pp. 1527–1547, July/August 1971, http://dx.doi.org/10.1109/TPAS.1971.293138.

[B23] Kundur, P., M. Klein, G.J. Rogers, and M.S. Zywno, "Application of Power System Stabilizers for Enhancement of Overall System Stability," IEEE Transactions on Power Systems, vol. 4, no. 2, pp. 614–626, May 1989, http://dx.doi.org/10.1109/59.193836.

[B24] Lane, L.J., D.F. Rogers, and P.A. Vance, "Design and Tests of a Static Excitation System for Industrial and Utility Steam Turbine-Generators," AIEE Trans. Power App. Syst., vol. 80, Feb, pp. 1077–1085, 1962.

[B25] Lee, C.H. and F.W. Keay, "A New Excitation System and a Method of Analyzing Voltage Response," 1964 *IEEE International Convention Record*, vol. 12, pt. 3, pp. 5–14.

[B26] Lee, D.C., R.E. Beaulieu, and J.R.R. Service, "A Power System Stabilizer Using Speed and Electrical Power Inputs—Design and Field Experience," IEEE Transactions on Power Apparatus and Systems, vol. PAS-100, no. 9, pp. 4151–4157, September 1981, http://dx.doi.org/10.1109/TPAS.1981.316966.

[B27] McClymont, K.R., G. Manchur, R.J. Ross, and R.J. Wilson, "Experience with High-Speed Rectifier Excitation Systems," IEEE Transactions on Power Apparatus and Systems, vol. PAS-87, June, pp. 1464–1470, 1968, http://dx.doi.org/10.1109/TPAS.1968.292115.

[B28] Murdoch, A., E.L. Owen, J.J. Sanchez-Gasca, M.J. D'Antonio, and R.A. Lawson, "Excitation Systems—The Use of var/pf Control—A System Stability Perspective," IEEE Paper 99-WM-025.

Copyright © 2022 IEEE. All rights reserved.

[B29] Rubenstein, A.S., and M. Temoshok, "Underexcitation Reactive Ampere Limit for Modern Amplidyne Voltage Regulator," *AIEE Trans. Power App. Syst.*, PAS-15, vol. 73, Dec. 1954, pp. 1433–1438.

[B30] Rubenstein, A.S., and W.W. Walkley, "Control of Reactive KVA with Modern Amplidyne Voltage Regulators," *AIEE Trans. Power App. Syst.*, Dec. 1957, http://dx.doi.org/10.1109/AIEEPAS.1957.4499698.

[B31] Watson, W., and G.S. Manchur, "Experience with Supplementary Damping Signals for Generator Static Excitation Systems," *IEEE Trans. Power App. Syst.*, Jan./Feb. 1973, pp. 199–203, http://dx.doi.org/10.1109/TPAS.1973.293613.

[B32] Whitney, E.C., D.B. Hoover, and P.O. Bobo, "An Electric Utility Brushless Excitation System," AIEE Trans. Power App. Syst., vol. 78, pp. 1821–1824, 1959, http://dx.doi.org/10.1109/AIEEPAS.1959.4500668.

[B33] Woolridge, P.A.B. and A.L. Blythe, "Considerations Affecting the Design Philosophy of Solid-State Exciters," IEEE Transactions on Power Apparatus and Systems, vol. PAS-87, May, pp. 1288–1299, 1968, http://dx.doi.org/10.1109/TPAS.1968.292220.

Copyright © 2022 IEEE. All rights reserved.