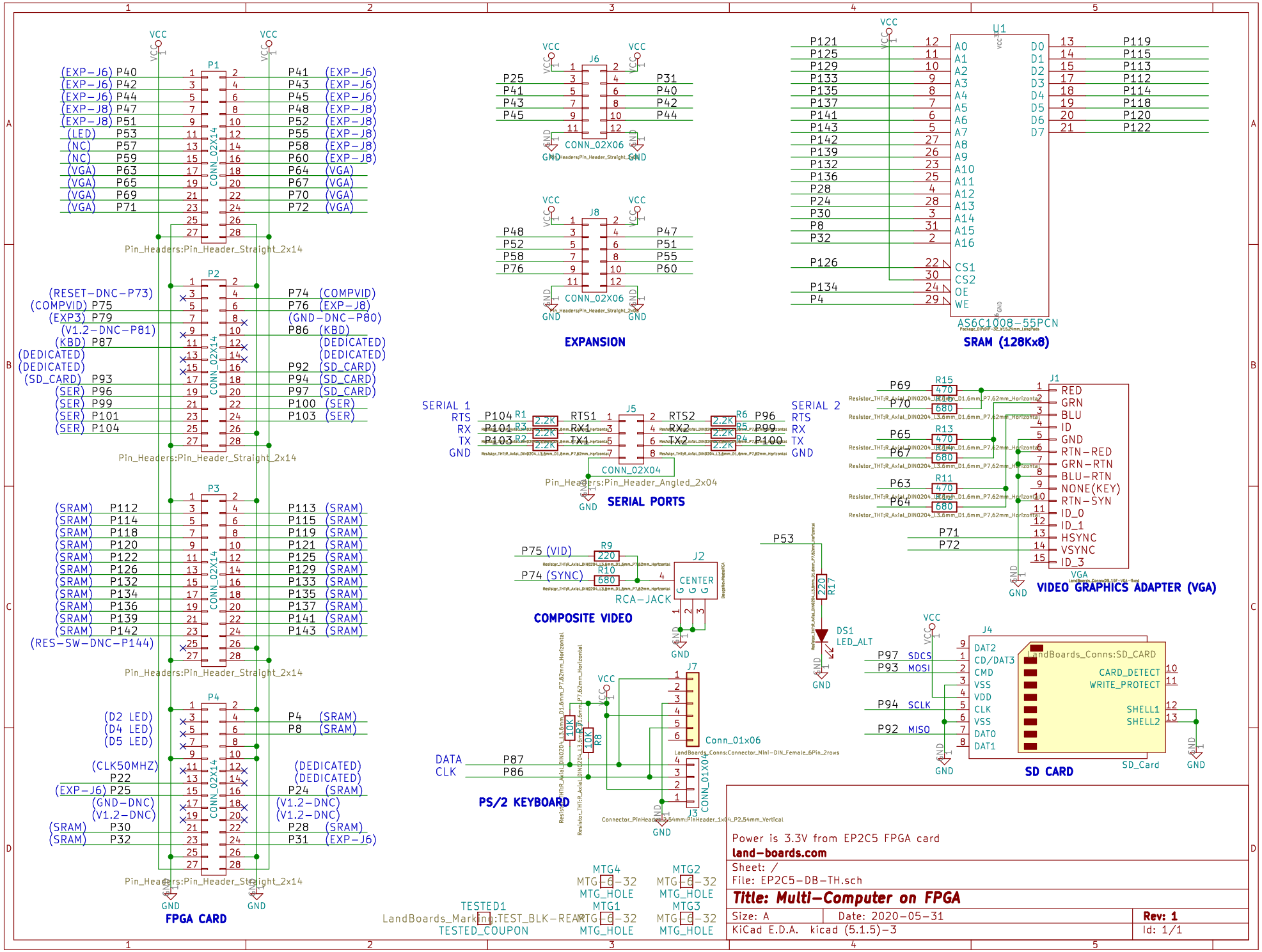
P1
(EXP-J6) P40
(EXP-J6) P42
(EXP-J6) P44
(EXP-J8) P47
(EXP-J8) P51
(LED) P53
(NC) P57
(NC) P59
(VGA) P63
(VGA) P65
(VGA) P69
(VGA) P71
P41 (EXP-J6)
P43 (EXP-J6)
P45 (EXP-J6)
P48 (EXP-J8)
P52 (EXP-J8)
P55 (EXP-J8)
P58 (EXP-J8)
P60 (EXP-J8)
P64 (VGA)
P67 (VGA)
P70 (VGA)
P72 (VGA)
CONN_02X14
Pin_Headers:Pin_Header_Straight_2x14
P2
(RESET-DNC-P73)
(COMPVID) P75
(EXP3) P79
(V1.2-DNC-P81)
(KBD) P87
(DEDICATED)
(DEDICATED)
(SD_CARD) P93
(SER) P96
(SER) P99
(SER) P101
(SER) P104
P74 (COMPVID)
P76 (EXP-J8)
(GND-DNC-P80)
P86 (KBD)
(DEDICATED)
(DEDICATED)
P92 (SD_CARD)
P94 (SD_CARD)
P97 (SD_CARD)
P100 (SER)
P103 (SER)
Pin_Headers:Pin_Header_Straight_2x14
P3
(SRAM) P112
(SRAM) P114
(SRAM) P118
(SRAM) P120
(SRAM) P122
(SRAM) P126
(SRAM) P132
(SRAM) P134
(SRAM) P136
(SRAM) P139
(SRAM) P142
(RES-SW-DNC-P144)
P113 (SRAM)
P115 (SRAM)
P119 (SRAM)
P121 (SRAM)
P125 (SRAM)
P129 (SRAM)
P133 (SRAM)
P135 (SRAM)
P137 (SRAM)
P141 (SRAM)
P143 (SRAM)
Pin_Headers:Pin_Header_Straight_2x14
P4
(D2 LED)
(D4 LED)
(D5 LED)
(CLK50MHZ)
P22
(EXP-J6) P25
(GND-DNC)
(V1.2-DNC)
(SRAM) P30
(SRAM) P32
P4 (SRAM)
P8 (SRAM)
(DEDICATED)
(DEDICATED)
P24 (SRAM)
(V1.2-DNC)
(V1.2-DNC)
P28 (SRAM)
P31 (EXP-J6)
Pin_Headers:Pin_Header_Straight_2x14
FPGA CARD
J6
P25
P41
P43
P45
P31
P40
P42
P44
CONN_02X06
J8
P48
P52
P58
P76
P47
P51
P55
P60
CONN_02X06
EXPANSION
U1
P121
P125
P129
P133
P135
P137
P141
P143
P142
P139
P132
P136
P28
P24
P30
P8
P32
P126
P134
P4
A0
A1
A2
A3
A4
A5
A6
A7
A8
A9
A10
A11
A12
A13
A14
A15
A16
CS1
CS2
OE
WE
D0
D1
D2
D3
D4
D5
D6
D7
P119
P115
P113
P112
P114
P118
P120
P122
AS6C1008-55PCN
SRAM (128Kx8)
SERIAL 1
RTS P104
RX P101
TX P103
GND
R1 2.2K
R3 2.2K
R2 2.2K
RTS1
RX1
TX1
J5
RTS2
RX2
TX2
R6 2.2K
R5 2.2K
R4 2.2K
P96
P99
P100
SERIAL 2
RTS
RX
TX
GND
CONN_02X04
Pin_Headers:Pin_Header_Angled_2x04
SERIAL PORTS
P69 R15 470
P70 680
P65 R13 470
P67 680
P63 R11 470
P64 680
J1
RED
GRN
BLU
ID
GND
RTN-RED
GRN-RTN
BLU-RTN
NONE(KEY)
RTN-SYN
ID_0
ID_1
HSYNC
VSYNC
ID_3
P71
P72
VGA
VIDEO GRAPHICS ADAPTER (VGA)
P75 (VID) R9 220
P74 (SYNC) R10 680
J2
CENTER
RCA-JACK
COMPOSITE VIDEO
P53
R17 220
DS1
LED_ALT
J4
DAT2
CD/DAT3
CMD
VSS
VDD
CLK
VSS
DAT0
DAT1
P97 SDCS
P93 MOSI
P94 SCLK
P92 MISO
LandBoards_Conns:SD_CARD
CARD_DETECT
WRITE_PROTECT
SHELL1
SHELL2
SD_Card
SD CARD
J7
Conn_01x06
LandBoards_Conns:Connector_Mini-DIN_Female_6Pin_2rows
DATA P87
CLK P86
R7 10K
R8 10K
J3
CONN_01X04
Connector_PinHeader_2.54mm:PinHeader_1x04_P2.54mm_Vertical
PS/2 KEYBOARD
TESTED1
LandBoards_Marking:TEST_BLK-REAR
TESTED_COUPON
MTG4 MTG-6-32 MTG_HOLE
MTG2 MTG-6-32 MTG_HOLE
MTG1 MTG-6-32 MTG_HOLE
MTG3 MTG-6-32 MTG_HOLE
Power is 3.3V from EP2C5 FPGA card
land-boards.com
Sheet: /
File: EP2C5-DB-TH.sch
Title: Multi-Computer on FPGA
Size: A
Date: 2020-05-31
Rev: 1
KiCad E.D.A. kicad (5.1.5)-3
Id: 1/1