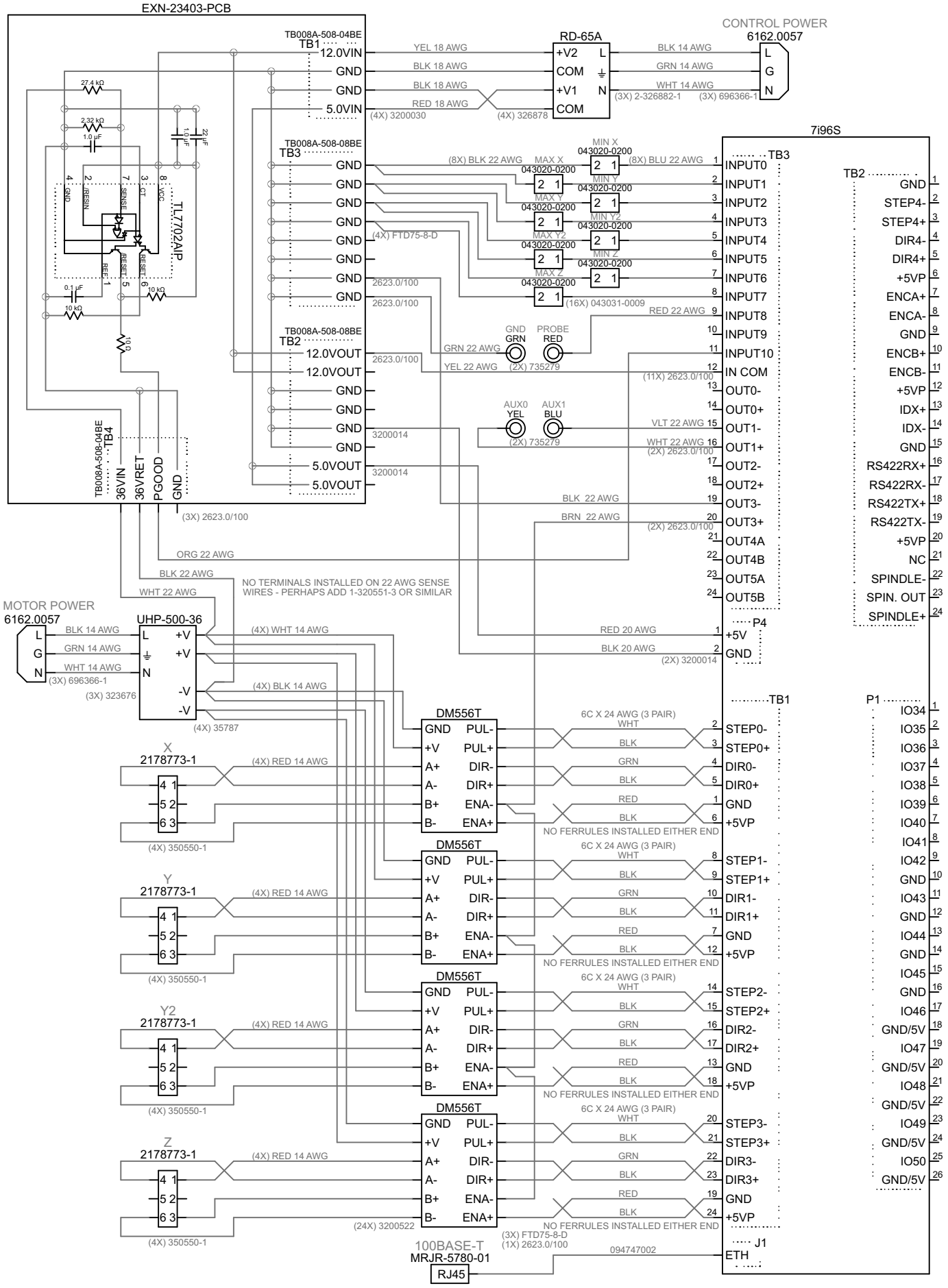
EXN-23403-PCB
TB008A-508-04BE
TB1
12.0VIN
GND
GND
5.0VIN
TB008A-508-08BE
TB3
TB008A-508-08BE
TB2
12.0VOUT
12.0VOUT
5.0VOUT
5.0VOUT
TB008A-508-04BE
TB4
36VIN
36VRET
PGOOD
GND
TL7702AIP
RD-65A
+V2
COM
+V1
COM
L
N
CONTROL POWER
6162.0057
L
G
N
YEL 18 AWG
BLK 18 AWG
BLK 18 AWG
RED 18 AWG
(4X) 3200030
(4X) 326878
BLK 14 AWG
GRN 14 AWG
WHT 14 AWG
(3X) 2-326882-1
(3X) 696366-1
(4X) FTD75-8-D
2623.0/100
3200014
(3X) 2623.0/100
(8X) BLK 22 AWG
(8X) BLU 22 AWG
MIN X
MAX X
MIN Y
MAX Y
MIN Y2
MAX Y2
MIN Z
MAX Z
043020-0200
(16X) 043031-0009
RED 22 AWG
GRN 22 AWG
YEL 22 AWG
GND
GRN
PROBE
RED
(2X) 735279
AUX0
YEL
AUX1
BLU
(2X) 735279
VLT 22 AWG
WHT 22 AWG
(11X) 2623.0/100
(2X) 2623.0/100
BLK 22 AWG
BRN 22 AWG
(2X) 2623.0/100
ORG 22 AWG
BLK 22 AWG
WHT 22 AWG
NO TERMINALS INSTALLED ON 22 AWG SENSE
WIRES - PERHAPS ADD 1-320551-3 OR SIMILAR
7i96S
TB3
INPUT0
INPUT1
INPUT2
INPUT3
INPUT4
INPUT5
INPUT6
INPUT7
INPUT8
INPUT9
INPUT10
IN COM
OUT0-
OUT0+
OUT1-
OUT1+
OUT2-
OUT2+
OUT3-
OUT3+
OUT4A
OUT4B
OUT5A
OUT5B
P4
+5V
GND
(2X) 3200014
TB1
STEP0-
STEP0+
DIR0-
DIR0+
GND
+5VP
STEP1-
STEP1+
DIR1-
DIR1+
GND
+5VP
STEP2-
STEP2+
DIR2-
DIR2+
GND
+5VP
STEP3-
STEP3+
DIR3-
DIR3+
GND
+5VP
J1
ETH
TB2
GND
STEP4-
STEP4+
DIR4-
DIR4+
+5VP
ENCA+
ENCA-
GND
ENCB+
ENCB-
+5VP
IDX+
IDX-
GND
RS422RX+
RS422RX-
RS422TX+
RS422TX-
+5VP
NC
SPINDLE-
SPIN. OUT
SPINDLE+
P1
IO34
IO35
IO36
IO37
IO38
IO39
IO40
IO41
IO42
GND
IO43
GND
IO44
GND
IO45
GND
IO46
GND/5V
IO47
GND/5V
IO48
GND/5V
IO49
GND/5V
IO50
GND/5V
MOTOR POWER
6162.0057
L
G
N
BLK 14 AWG
GRN 14 AWG
WHT 14 AWG
(3X) 696366-1
UHP-500-36
L
N
+V
+V
-V
-V
(3X) 323676
(4X) 35787
(4X) WHT 14 AWG
(4X) BLK 14 AWG
DM556T
GND
+V
A+
A-
B+
B-
PUL-
PUL+
DIR-
DIR+
ENA-
ENA+
6C X 24 AWG (3 PAIR)
WHT
BLK
GRN
BLK
RED
BLK
NO FERRULES INSTALLED EITHER END
X
2178773-1
Y
2178773-1
Y2
2178773-1
Z
2178773-1
(4X) RED 14 AWG
(4X) 350550-1
(24X) 3200522
(3X) FTD75-8-D
(1X) 2623.0/100
100BASE-T
MRJR-5780-01
RJ45
094747002