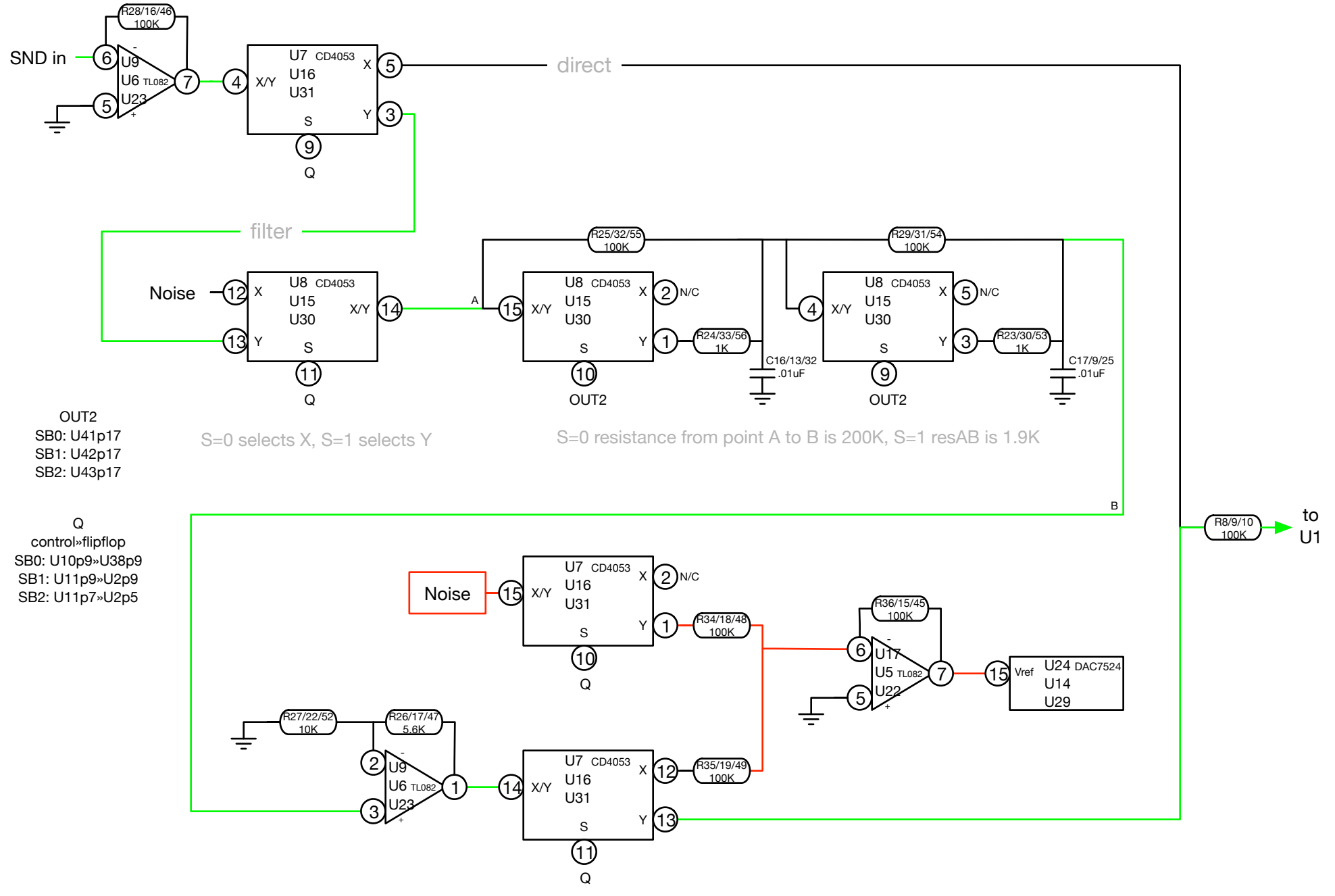

Noise/Filter network

SEGA XY Universal Sound Board

11/29/2016 gauck.com