For Service Manuals
MAURITRON SERVICES
8 Cherry Tree Road, Chinnor
Oxfordshire, OX9 4QY.
Tel (01844) 351694
Fax (01844) 352554
email:- mauritron@dial.pipex.com

Tektronix®
COMMITTED TO EXCELLENCE

## WARNING

THE FOLLOWING SERVICING INSTRUCTIONS ARE FOR USE BY QUALIFIED PERSONNEL ONLY. TO AVOID PERSONAL INJURY, DO NOT PERFORM ANY SERVICING OTHER THAN THAT CONTAINED IN OPERATING INSTRUCTIONS UNLESS YOU ARE QUALIFIED TO DO SO.

# 465B
# OSCILLOSCOPE
## WITH OPTIONS
## SERVICE

INSTRUCTION MANUAL

Tektronix, Inc.
P.O. Box 500
Beaverton, Oregon 97077

Serial Number _____ - _____

070-2757-00

First Printing APR 1979

## WARRANTY

Tektronix warrants to the original purchaser that this product is free from defects in materials and workmanship, under normal use, for a period of one (1) year from the date of shipment. Tektronix will, at its option, repair or replace the product if Tektronix determines it is defective within the warranty period, and it is returned, freight prepaid, to a Tektronix Service Center.

**There is no implied warranty of fitness for a particular purpose. Tektronix is not liable for consequential damages.**

Copyright © 1979 by Tektronix, Inc. All rights reserved. Contents of this publication may not be reproduced in any form without the permission of Tektronix, Inc.

Products of Tektronix, Inc. and its subsidiaries are covered by U.S. and foreign patents and/or pending patents.

TEKTRONIX, TEK, SCOPE-MOBILE, and are registered trademarks of Tektronix, Inc.

Printed in U.S.A. Specification and price change privileges are reserved.

# TABLE OF CONTENTS


| | | Page |
|---|---|---|
| | LIST OF ILLUSTRATIONS | vi |
| | LIST OF TABLES | viii |
| | SAFETY SUMMARY | ix |
| SECTION 1 | INTRODUCTION AND SPECIFICATION | |
| | INTRODUCTION | 1-1 |
| | SPECIFICATION | 1-1 |
| SECTION 2 | OPERATION INSTRUCTIONS | |
| | INSTALLATION | 2-1 |
| | PREPARATION FOR USE | 2-1 |
| | Safety Considerations | 2-1 |
| | Line Voltage Selection | 2-1 |
| | Regulating Range Selection | 2-2 |
| | Instrument Cooling | 2-3 |
| | Rackmounting | 2-3 |
| | CONTROLS, CONNECTORS, AND INDICATORS | 2-3 |
| | VERTICAL | 2-3 |
| | DISPLAY AND CALIBRATOR | 2-4 |
| | TRIGGER | 2-5 |
| | HORIZONTAL AND POWER | 2-7 |
| | REAR PANEL | 2-8 |
| | LEFT SIDE PANEL | 2-9 |
| | RIGHT SIDE PANEL | 2-9 |
| | BASIC OSCILLOSCOPE DISPLAYS | 2-10 |
| | PRESET INSTRUMENT CONTROLS | 2-10 |
| | NORMAL SWEEP DISPLAY | 2-10 |
| | MAGNIFIED SWEEP DISPLAY | 2-10 |
| | DELAYED SWEEP DISPLAY | 2-10 |
| | ALTERNATE SWEEP DISPLAY | 2-11 |
| | SINGLE SWEEP DISPLAY | 2-11 |
| | X-Y DISPLAY | 2-11 |
| | RACKMOUNTING | 2-12 |
| | DIMENSIONS | 2-12 |
| | SLIDE-OUT TRACKS | 2-12 |
| | MOUNTING PROCEDURE | 2-16 |
| | ALTERNATIVE REAR MOUNTING METHODS | 2-21 |
| | REMOVING OR INSTALLING THE INSTRUMENT | 2-21 |
| | SLIDE-OUT TRACK LUBRICATION | 2-21 |

# TABLE OF CONTENTS (cont)


| | | Page |
|---|---|---|
| SECTION 3 | THEORY OF OPERATION | |
| | INTRODUCTION | 3-1 |
| | SECTION ORGANIZATION | 3-1 |
| | INTEGRATED CIRCUIT DESCRIPTIONS | 3-1 |
| | GENERAL DESCRIPTION | 3-2 |
| | DETAILED DESCRIPTION | 3-4 |
| | CHANNEL 1 PREAMP | 3-4 |
| | CHANNEL 2 PREAMP | 3-6 |
| | VERTICAL SWITCHING LOGIC | 3-6 |
| | VERTICAL MODE SWITCH | 3-9 |
| | VERTICAL OUTPUT AMPLIFIER | 3-10 |
| | A AND B TRIGGER GENERATORS | 3-11 |
| | SWEEP AND Z AXIS LOGIC CIRCUIT | 3-12 |
| | A AND B SWEEP GENERATORS | 3-16 |
| | HORIZONTAL DISPLAY LOGIC | 3-18 |
| | HORIZONTAL AMPLIFIER | 3-18 |
| | CRT CIRCUIT | 3-20 |
| | CALIBRATOR | 3-24 |
| | LOW-VOLTAGE POWER SUPPLY | 3-25 |
| | FAN MOTOR CIRCUIT | 3-28 |
| SECTION 4 | CALIBRATION PROCEDURE | |
| | Introduction | 4-1 |
| | Test Equipment Required | 4-1 |
| | PERFORMANCE CHECK | 4-4 |
| | INDEX TO PERFORMANCE CHECK PROCEDURE | 4-5 |
| | VERTICAL | 4-6 |
| | TRIGGERS | 4-12 |
| | HORIZONTAL | 4-15 |
| | ADJUSTMENT PROCEDURE | 4-19 |
| | INDEX TO ADJUSTMENT PROCEDURE | 4-21 |
| | POWER SUPPLY | 4-23 |
| | DISPLAY AND Z AXIS | 4-25 |
| | VERTICAL | 4-27 |
| | TRIGGERS | 4-40 |
| | HORIZONTAL | 4-52 |
| | GATES, CALIBRATOR, AND EXT Z AXIS | 4-61 |

# TABLE OF CONTENTS (cont)


| | | Page |
|---|---|---|
| SECTION 5 | MAINTENANCE | |
| | INTRODUCTION | 5-1 |
| | CABINET AND RACK ADAPTER REMOVAL | 5-1 |
| | PREVENTIVE MAINTENANCE | 5-3 |
| | Introduction | 5-3 |
| | Cleaning | 5-3 |
| | Visual Inspection | 5-4 |
| | Lubrication | 5-4 |
| | Semiconductor Checks | 5-4 |
| | Readjustment | 5-4 |
| | TROUBLESHOOTING | 5-5 |
| | Introduction | 5-5 |
| | Troubleshooting Aids | 5-5 |
| | Troubleshooting Equipment | 5-9 |
| | Troubleshooting Techniques | 5-9 |
| | CORRECTIVE MAINTENANCE | 5-11 |
| | Introduction | 5-11 |
| | Maintenance Precautions | 5-11 |
| | Static Sensitive Components | 5-11 |
| | Obtaining Replacement Parts | 5-12 |
| | Soldering Techniques | 5-12 |
| | Component Removal and Replacement | 5-13 |
| | Readjustment After Repair | 5-21 |
| | Instrument Repackaging | 5-21 |
| | Required Reshipment Information | 5-21 |
| | MAINTENANCE AIDS | 5-22 |
| SECTION 6 | OPTIONS | |
| | GENERAL OPTION INFORMATION | 6-1 |
| | OPTION 04 | 6-3 |
| | INTRODUCTION | 6-3 |
| | OPTION 04 REPLACEABLE ELECTRICAL PARTS LIST | 6-4 |
| | OPTION 04 REPLACEABLE MECHANICAL PARTS LIST | 6-4 |
| | OPTION 05 TV SYNC SEPARATOR | 6-5 |
| | INTRODUCTION | 6-5 |
| | SPECIFICATION | 6-5 |
| | FURNISHED ACCESSORIES | 6-6 |

# TABLE OF CONTENTS (cont)


| SECTION 6 | OPTIONS (cont) | Page |
|---|---|---|
| | OPERATING INFORMATION | 6-6 |
| | Installation of Video Graticule | 6-6 |
| | Operation of the Sync Separator | 6-7 |
| | Triggering the Sweep | 6-7 |
| | Vertical Operating Modes—Special Consideration | 6-7 |
| | Typical Operation | 6-8 |
| | Selecting an Individual Line | 6-8 |
| | Special Measurements | 6-8 |
| | IDENTIFYING FIELDS, FRAMES, AND LINES IN 525/60 AND 625/50 TV SYSTEMS | 6-9 |
| | NTSC (CCIR System M) | 6-9 |
| | CCIR System B and Similar 625/50 Systems (including PAL) | 6-9 |
| | THEORY OF OPERATION | 6-10 |
| | Introduction | 6-10 |
| | Switching | 6-10 |
| | Trigger Pickoff | 6-10 |
| | Trigger Amplifier and Inverter | 6-11 |
| | Sync Separator | 6-11 |
| | ADJUSTMENT PROCEDURE | 6-12 |
| | Introduction | 6-12 |
| | Preliminary Procedure for Sync Separator Calibration | 6-12 |
| | Procedure | 6-13 |
| | OPTION 05 REPLACEABLE ELECTRICAL PARTS LIST | 6-19 |
| | OPTION 05 REPLACEABLE MECHANICAL PARTS LIST | 6-21 |
| | OPTION 07 EXTERNAL DC OPERATION | 6-23 |
| | INTRODUCTION | 6-23 |
| | SPECIFICATION | 6-23 |
| | CONTROLS AND CONNECTORS | 6-23 |
| | OPERATION AND INSPECTION | 6-23 |
| | THEORY OF OPERATION | 6-23 |
| | General Description | 6-24 |
| | Turn-Off Level Circuit | 6-24 |
| | Turn-Off Circuit | 6-25 |
| | Start Circuit | 6-25 |
| | Inverter Circuit | 6-26 |
| | DC Input | 6-26 |
| | Start-Stop Switch | 6-27 |
| | Power-Mode Switch (S1665) | 6-27 |
| | MAINTENANCE | 6-27 |
| | ADJUSTMENT | 6-28 |
| | OPTION 07 REPLACEABLE ELECTRICAL PARTS LIST | 6-33 |
| | OPTION 07 REPLACEABLE MECHANICAL PARTS LIST | 6-36 |
| | OPTION 78 TYPE P11 PHOSPHOR | 6-39 |

# TABLE OF CONTENTS (cont)

SECTION 7 REPLACEABLE ELECTRICAL PARTS LIST

SECTION 8 DIAGRAMS

SECTION 9 REPLACEABLE MECHANICAL PARTS LIST

ACCESSORIES TAB PAGE

CHANGE INFORMATION

# LIST OF ILLUSTRATIONS


| Figure | | Page |
|---|---|---|
| 1-1 | 465B Oscilloscope | xii |
| 2-1 | Commonly used power plugs | 2-2 |
| 2-2 | Regulating range selector and line fuse | 2-2 |
| 2-3 | Vertical controls, connectors, and indicators | 2-3 |
| 2-4 | Display controls and calibrator | 2-5 |
| 2-5 | Trigger controls, connectors, and indicators | 2-7 |
| 2-6 | Horizontal and power connectors, controls, and indicators | 2-8 |
| 2-7 | Rear panel and left side panel controls, connectors, and indicators | 2-9 |
| 2-8 | Dimensional drawing | 2-13 |
| 2-9 | Dimensional drawing (cont) | 2-14 |
| 2-10 | Slide-out track assemblies | 2-15 |
| 2-11 | Hardware needed to mount the instrument in the cabinet rack | 2-15 |
| 2-12 | Rear support kit | 2-16 |
| 2-13 | Installing the support block on the instrument | 2-16 |
| 2-14 | Methods of mounting the stationary section to the front rails | 2-17 |
| 2-15 | Locating the mounting holes for the left stationary section. Same dimensions apply to right stationary section | 2-18 |
| 2-16 | Supporting the rear stationary sections: (A) Dimensions necessary: (B) Completed installation | 2-19 |
| 2-17 | Procedure for inserting or removing the instrument after the slide-out tracks have been installed | 2-20 |
| 2-18 | Alignment adjustment for correct operation | 2-21 |
| 2-19 | Alternative method of installing the instrument using rear support brackets | 2-22 |
| 3-1 | Basic block diagram of the 465B Oscilloscope | 3-1 |
| 3-2 | Detailed block diagram of the Channel 1 Preamplifier circuit | 3-4 |
| 3-3 | Detailed block diagram of the Vertical Switching Logic circuit | 3-7 |
| 3-4 | Switching waveform at the junction of R1903 and R1904 | 3-8 |
| 3-5 | Vertical Alt Sync Pulse at U1705 pin 9 | 3-9 |
| 3-6 | Detailed block diagram of the Sweep and Z-Axis Logic circuit | 3-14 |
| 3-7 | Detailed block diagram of the A Sweep Generator circuit | 3-16 |
| 3-8 | Detailed block diagram of the Horizontal Amplifier circuit | 3-19 |
| 3-9 | Detailed block diagram of the CRT and Z-Axis Amplifier circuit | 3-21 |
| 3-10 | (A) Sinusoidal sample voltage at center tap of T4015. (B) Clamped sample voltage at the junction of CR4111 and CR4112 | 3-23 |
| 3-11 | (A) Z-Axis Amplifier output. (B) Clamped sample voltage at the junction of CR4111 and CR4112 | 3-24 |
| 3-12 | Detailed block diagram of the Calibrator circuit | 3-24 |
| 3-13 | Calibrator circuit waveform diagram | 3-25 |
| 3-14 | Detailed block diagram of the Low-Voltage Power Supply circuit | 3-26 |
| 3-15 | Foldover circuit action | 3-27 |
| 4-1 | Typical display when high-frequency compensation is correctly adjusted | 4-35 |

# LIST OF ILLUSTRATIONS (cont)


| Figure | | Page |
|---|---|---|
| 5-1 | Removing the wrap-around cabinet. | 5-1 |
| 5-2 | Partial Table 5-1. | 5-6 |
| 5-3 | Color codes. | 5-8 |
| 5-4 | Locations of power transformer secondary wires. | 5-17 |
| 6-1 | 465B Option 04 primary winding with power-line filter. | 6-3 |
| 6-2 | 465B Oscilloscope with Option 05. | 6-5 |
| 6-3 | Option 05 simplified block diagram. | 6-10 |
| 6-4 | A12 Sync Separator and Inverter Amplifier board component locations. | 6-15 |
| 6-5 | Option 05 465B Vertical Input changes. | 6-15 |
| 6-6 | Option 05 Trigger Switches and Trigger Pickoff. | 6-16 |
| 6-7 | Option 05 TV Sync Separator and Inverter Amplifier. | 6-17 |
| 6-8 | Option 07 simplified block diagram. | 6-24 |
| 6-9 | 465B Option 07 DC Inverter. | 6-25 |
| 6-10 | 465B Option 07 primary winding. | 6-26 |
| 6-11 | Typical battery pack discharge curves. | 6-28 |
| 6-12 | Option 07 Inverter balance. | 6-29 |
| 6-13 | Option 07 DC Inverter circuit board adjustment and test point locations. | 6-30 |
| 6-14 | Option 07 DC Inverter idealized waveforms. | 6-30 |
| 6-15 | Option 07 DC Inverter circuit board component locations. | 6-31 |
| 6-16 | Option 07 Exploded. | 6-37 |
| 8-1 | Semiconductor lead configuration. | |
| 8-2 | A3 Attenuator circuit board. | |
| 8-3 | A1 Vertical Preamplifier circuit board. | |
| 8-4 | A5 Vertical Mode Switch circuit board. | |
| 8-5 | A2 Vertical Output circuit board. | |
| 8-6 | A7 A and B Trigger Generator circuit board. | |
| 8-7 | A4 Interface circuit board. | |
| 8-8 | A6 Timing circuit board. | |
| 8-9 | A8 Fan circuit board. | |
| 8-10 | Interface circuit board adjustment locations. | |
| 8-11 | Vertical Preamplifier circuit board adjustment locations. | |
| 8-12 | Vertical Output Amplifier circuit board adjustment locations. | |
| 8-13 | Trigger Generator and Sweep Logic circuit board adjustment locations. | |
| 8-14 | Timing circuit board adjustment locations. | |

# LIST OF TABLES


| Table | | Page |
|---|---|---|
| 1-1 | ELECTRICAL CHARACTERISTICS | 1-1 |
| 1-2 | ENVIRONMENTAL CHARACTERISTICS | 1-11 |
| 1-3 | PHYSICAL CHARACTERISTICS | 1-12 |
| 2-1 | POWER CORD CONDUCTOR IDENTIFICATION | 2-1 |
| 2-2 | REGULATING RANGE | 2-2 |
| 2-3 | FUSE SELECTION | 2-3 |
| 4-1 | TEST EQUIPMENT REQUIRED | 4-1 |
| 4-2 | DEFLECTION FACTOR LIMITS | 4-8 |
| 4-3 | LOW-FREQUENCY COMPENSATION SETUP | 4-9 |
| 4-4 | A AND B TIMING ACCURACY | 4-16 |
| 4-5 | DELAY OR DIFFERENTIAL TIME ACCURACY | 4-17 |
| 4-6 | ADJUSTMENT INTERACTIONS | 4-20 |
| 4-7 | LOW VOLTAGE POWER SUPPLY LIMITS | 4-24 |
| 4-8 | TYPICAL LOW VOLTAGE POWER SUPPLY RIPPLE | 4-24 |
| 4-9 | VERTICAL DEFLECTION ACCURACY | 4-30 |
| 4-10 | MAXIMUM OVERSHOOT OR ROUNDING | 4-32 |
| 4-11 | VERTICAL OUTPUT LOW-FREQUENCY COMPENSATION | 4-32 |
| 4-12 | CH 1 LOW-FREQUENCY COMPENSATION | 4-33 |
| 4-13 | CH 2 LOW-FREQUENCY COMPENSATION | 4-33 |
| 4-14 | VOLTS/DIV COMPENSATION | 4-35 |
| 4-15 | A AND B TIMING ACCURACY | 4-56 |
| 4-16 | A AND B MAGNIFIED ACCURACY | 4-57 |
| 4-17 | DIFFERENTIAL TIME ACCURACY | 4-58 |
| 5-1 | READ-ONLY MEMORY U1605 LOGIC | 5-7 |
| 5-2 | SUGGESTED TROUBLESHOOTING EQUIPMENT | 5-23 |
| 6-1 | OPTION 05 TEST EQUIPMENT REQUIRED | 6-13 |
| 6-2 | OPTION 07 TEST EQUIPMENT REQUIRED | 6-27 |

# PRECAUTIONS

### Power Source

This product is intended to operate from a power source that will not apply more than 250 volts rms between the supply conductors or between either supply conductor and ground. A protective ground connection by way of the grounding conductor in the power cord is essential for safe operation.

### Grounding the Product

This product is grounded through the grounding conductor of the power cord. To avoid electrical shock, plug the power cord into a properly wired receptacle before connecting to the product input or output terminals. A protective ground connection by way of the grounding conductor in the power cord is essential for safe operation.

### Use the Proper Power Cord

Use only the power cord and connector specified for your product.
Use only a power cord that is in good condition.

For detailed information on power cords and connectors, see Installation instructions in Section 2 of this manual.

Refer cord and connector changes to qualified service personnel.

### Use the Proper Fuse

To avoid fire hazard, use only the fuse specified in the parts list for this product and having identical type, voltage rating, and current rating characteristics (see Installation instructions in Section 2 of this manual).

Refer internal fuse replacement to qualified service personnel.

### Do Not Operate in Explosive Atmospheres

To avoid explosion, do not operate this product in an atmosphere of explosive gases unless it has been specifically certified for such operation.

### Do Not Remove Covers or Panels

To avoid personal injury, do not remove the product covers or panels. Do not operate the product without the covers and panels properly installed.

# OPERATORS SAFETY SUMMARY

The general safety information in this summary is for both operating personnel and servicing personnel. Specific warnings and cautions will be found throughout the manual where they apply and do not appear in this summary.

## TERMS

### In This Manual

CAUTION statements identify conditions or practices that could result in damage to the equipment or other property.

WARNING statements identify conditions or practices that could result in personal injury or loss of life.

### As Marked on Equipment

CAUTION indicates either a personal injury hazard not immediately accessible as you read the marking or a hazard to property including the equipment itself.

DANGER or WARNING—HIGH VOLTAGE indicates a personal injury hazard immediately accessible as you read the marking.

## SYMBOLS

### In This Manual

This symbol is used on schematic diagrams having static-sensitive components.

### As Marked on Equipment

DANGER — High voltage.

Protective ground (earth) terminal.

# SERVICING SAFETY SUMMARY

## *FOR QUALIFIED SERVICE PERSONNEL ONLY*

*Refer also to the preceding Operators Safety Summary.*

### Do Not Service Alone

Do not perform internal service or adjustment of this product unless another person capable of rendering first aid and resuscitation is present.

### Use Care When Servicing With Power On

Dangerous voltages exist at several points in this product. To avoid personal injury, do not touch exposed connections and components while power is on.

Disconnect power before removing protective panels, replacing components, or soldering.

### Power Source

This product is intended to operate from a power source that will not apply more than 250 volts rms between the supply conductors or between either supply conductor and ground. A protective ground connection by way of the grounding conductor in the power cord is essential for safe operation.

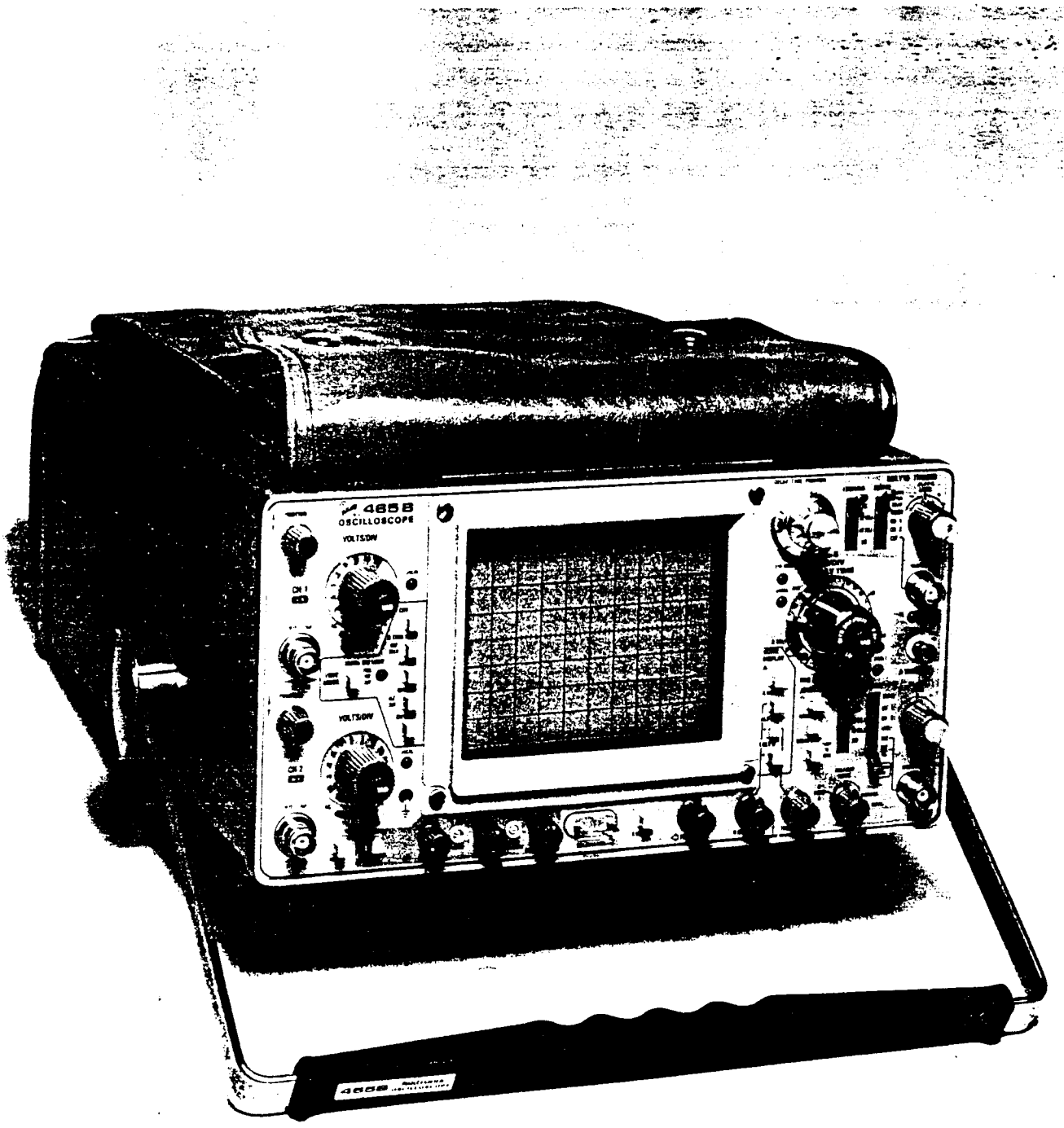


2757-03

Figure 1-1. 465B Oscilloscope.

# INTRODUCTION AND SPECIFICATION

## INTRODUCTION

The TEKTRONIX 465B Oscilloscope is a dual-channel, four-trace portable instrument, providing traces for two input channels, a trigger view from an external trigger input, and an add function. Calibrated deflection factors from 5 millivolts/division to 5 volts/division are provided by the dc-to-100 MHz vertical system for the input channels and add function. Sweep trigger circuits are capable of stable triggering over the full bandwidth capabilities of the vertical deflection system. The horizontal deflection system provides calibrated sweep rates from 0.5 second/division to 0.02 microsecond/division along with delayed sweep features for accurate relative-time measurements. A X10 magnifier extends the calibrated sweep rate to 2 nanoseconds/division. The instrument operates over a wide variation of line voltages and frequencies with maximum power consumption of approximately 100 watts.

Increased measurement capabilities are achieved by the 465B when it is equipped with an optional TEKTRONIX DM44 Digital Multimeter. The DM44 measures 0 to 20 megohms resistance, 0 to 1200 dc volts (+ or −), and −55°C to +150°C temperature (using a temperature probe). Measurement values are displayed on a 3 1/2-digit LED readout while the oscilloscope continues normal operation.

The digital multimeter and oscilloscope combine to provide a digital readout of time difference between any two points on the oscilloscope display. Both time measurement points are displayed simultaneously on the crt. Direct measurement of frequency is provided by a 1/TIME function.

This manual provides service information only for the 465B Oscilloscope. Service information for the DM44 Digital Multimeter is contained in a separate DM44 Service manual.

## SPECIFICATION

The following electrical characteristics (Table 1-1) are valid only if the instrument has been calibrated at an ambient temperature between +20°C and +30°C, the instrument is operating at an ambient temperature between 0°C and +50°C (unless otherwise noted), and the instrument has had a warmup period of about 20 minutes.

Environmental characteristics of the 465B are presented in Table 1-2, and physical characteristics listed in Table 1-3.

**Table 1-1**

**ELECTRICAL CHARACTERISTICS**

| Characteristics | Performance Requirements | Supplemental Information |
|---|---|---|
| | VERTICAL SYSTEM | |
| Deflection Factor | | |
| Range | 5 mV per division to 5 V per division in 10 steps, with a 1-2-5 sequence. | |
| Uncalibrated (VAR) Range | Continuously variable between settings. Extends deflection factor to at least 12.5 V per division. | |
| Accuracy | Within 3% | Gain set at 5 mV per division. |

**Table 1-1 (cont)**

| Characteristics | Performance Requirements | Supplemental Information |
|---|---|---|
| | VERTICAL SYSTEM (cont) | |
| Trace Shift as VAR VOLTS/DIV is Rotated | | 1.0 division or less. |
| Inverted Trace Shift | | Less than 2 divisions when switching from noninverted to inverted. |
| Input Gate Current | | |
| +20° C to +30° C | For Service Manuals Contact MAURITRON TECHNICAL SERVICES 8 Cherry Tree Rd, Chinnor Oxon OX9 4QY Tel:- 01844-351694 Fax:- 01844-352554 Email:- enquiries@mauritron.co.uk | 0.5 nA or less (0.1 division at 5 mV per division. |
| −15° C to +55° C | | 4 nA or less (0.8 division at 5 mV per division. |
| Channel Isolation | | At least 100:1 at 25 MHz. |
| Position Range | | At least +12 and −12 divisions from graticule center. |
| Chopped Mode Repetition Rate | Approximately 500 kHz. | Within 20%. |
| Input R and C | | |
| Resistance | 1 MΩ. | Within 2%. |
| Capacitance | Approximately 20 pF. | Within 3%. |
| R and C Product (+20° C to +30° C) | | Aberrations 2% or less using a P6105 probe. |
| Maximum Input Voltage | | |
| DC Coupled | 250 V (dc + peak ac).<br>500 V (p-p ac at 1 kHz or less). | |
| AC Coupled | 250 V (dc + peak ac).<br>500 V (p-p ac at 1 kHz or less). | |
| Cascaded Operation | | CH 1 VERT SIGNAL OUT into CH 2 input; AC coupled; using 50 Ω, 42-inch, RG 58 C/U cable terminated in 50 Ω at CH 2 input. |
| Bandwidth | Dc to at least 50 MHz. | |
| Sensitivity | At least 1 mV per division | |

**Table 1-1 (cont)**

| Characteristics | Performance Requirements | Supplemental Information |
|---|---|---|
| | TRIGGER SYSTEM | |
| Sensitivity | | When in EXT/10, multiply performance requirement by 10. |
| AC Coupled Signal | 0.3 division internal or 50 mV external from 30 Hz to 10 MHz, increasing to 1.5 divisions internal or 150 mV external at 100 MHz. | |
| LF REJ Coupled Signal | 0.5 division internal or 100 mV external from 50 kHz to 10 MHz, increasing to 1.5 divisions internal or 300 mV external at 100 MHz. | Attenuates signals below about 50 kHz. |
| HF REJ Coupled Signal | 0.5 division internal or 100 mV external from 30 Hz to 50 kHz. | Attenuates signals above about 50 kHz. |
| DC Coupled Signal | 0.3 division internal or 50 mV external from dc to 10 MHz, increasing to 1.5 divisions internal or 150 mV external at 100 MHz. | |
| Trigger Jitter | 0.5 ns or less at 100 MHz at 2 ns per division with X10 MAG depressed. | |
| External Trigger Inputs | | |
| Maximum Input Voltage | 250 V (dc + peak ac).<br>250 V (p-p ac at 1 kHz or less). | |
| Input Resistance | 1 MΩ | Within 10%. |
| Input Capacitance | | Approximately 20 pF, within 10%. |
| LEVEL Control Range | | |
| EXT | At least +2 and −2 V; 4 V p-p. | |
| EXT/10 | At least +20 and −20 V; 40 V p-p. | |
| Trigger View (A TRIGGER) | | |
| Deflection Factor | | DC trigger COUPLING only; checked with 1 kHz signal. |
| EXT | 100 mV per division ±5%. | |
| EXT/10 | 1 V per division ±5%. | |
| Rise Time | 5 ns or less | 20 MHz BW LIMIT at full bandwidth (button out). |

**Table 1-1 (cont)**

| Characteristics | Performance Requirements | | Supplemental Information |
|---|---|---|---|
| TRIGGER SYSTEM (cont) | | | |
| Delay Difference | ≤±0.15 division (≤±300 ps at 2 ns per division). | | With a 5-division signal having a 5-ns rise time or less from a 25 Ω source, centered vertically, with equal 50 Ω cable lengths from signal sources to vertical channel and external trigger inputs terminated in 50 Ω at each input. |
| Centering of Trigger Point | | | Within 1.0 division of center screen. |
| Flatness and Aberrations | | | +10%, −10%, 10% p-p. |
| HORIZONTAL DEFLECTION SYSTEM | | | |
| Sweep Rate | | | |
| Calibrated Range | | | |
| A Sweep | 0.5 s per division to 0.02 μs per division in 23 steps in a 1-2-5 sequence. X10 MAG extends maximum sweep rate to 2 ns per division. | | |
| B Sweep | 50 ms per division to 0.02 μs per division in 20 steps in a 1-2-5 sequence. X10 MAG extends maximum sweep rate to 2 ns per division. | | |
| Accuracy | **Unmagnified** | **Magnified** | Accuracy specification applies over the full 10 divisions. |
| +20°C to +30°C | Within ±2%. | Within ±3%. | When in X10 MAG, exclude first and last 50 ns of the sweep on 2-ns, 5-ns, 10-ns, and 20-ns sweep rates. |
| −15°C to +55°C | Within ±3%. | Within ±4%. | |
| Two-Division Linearity Check | | | ±5% over any two-division (or less) portion of the full 10 divisions. When in X10 MAG, exclude first and last magnified divisions when checking 2-ns, 5-ns, and 10-ns per division rates. |
| Alternate Sweep Trace Separation | | | ≥±4 divisions. |
| Variable Range (A Only) | Continuously variable between calibrated settings. Extends slowest A Sweep rate to at least 1.25 s per division. | | At least 2.5:1. |
| Sweep Length (A Only) | | | 10.5 to 11.5 divisions. |

**Table 1-1 (cont)**

| Characteristics | Performance Requirements | | Supplemental Information |
|---|---|---|---|
| HORIZONTAL DEFLECTION SYSTEM (cont) | | | |
| A Trigger Holdoff Variable | Increases A Sweep holdoff time by at least a factor of 10. | | |
| X10 Magnifier Registration | | | Within 0.2 division from graticule center (X10 MAG on to X10 MAG off). |
| Position Range | | | Start of sweep must position to right of graticule center. End of sweep must position to left of graticule center. |
| Differential Time Measurement Accuracy | **For Measurements of ≥1 Major Dial Division** | **For Measurements of <1 Major Dial Division** | With the A TIME/DIV switch at 0.5 μs and 0.2 μs the differential time measurement accuracy limit is valid only for DELAY TIME POSITION dial settings between 1.50 and 8.50. |
| +15°C to +35°C | Within ±1%. | Within ±0.01 major dial division. | |
| −15°C to +55°C | Within ±2.5%. | Within ±0.03 major dial division. | |
| Delay Time Jitter | One part (or less) in 50,000 (0.002%) of ten times the A TIME/DIV switch setting, when operating on power-line frequencies other than 50 Hz. One part (or less) in 20,000 (0.005%) of A TIME/DIV switch setting, when operating on 50 Hz power-line frequency. | | |
| Calibrated Delay Time | Continuous from 0.2 μs to at least 5 seconds after start of the delaying (A) sweep. | | With VAR control in calibrated detent. |
| X-Y Operation | | | With TIME/DIV switch set to extreme counterclockwise position. |
| X-Axis | | | |
| Deflection Factor | Same as vertical channel. | | With X10 MAG off. |
| Bandwidth | Dc to at least 4 MHz. | | 10-division reference signal. |
| Variable Range | Continuously variable between settings. Extends deflection factor to at least 12.5 V per division. | | |

**Table 1-1 (cont)**

| Characteristics | Performance Requirements | Supplemental Information |
|---|---|---|
| HORIZONTAL DEFLECTION SYSTEM (cont) | | |
| X-Y Operation (cont) | | |
| Input R and C | | |
| Resistance | 1 MΩ. | Within 2%. |
| Capacitance | Approximately 20 pF. | Within 3%. |
| Maximum Usable Input Voltage | | |
| DC Coupled | 250 V (dc + peak ac).<br>500 V (p-p ac at 1 kHz or less). | |
| AC Coupled | 250 V (dc + peak ac).<br>500 V (p-p ac at 1 kHz or less). | |
| Phase Difference Between X and Y Axis Amplifiers | | Within 3°, from dc to 50 kHz. |
| Deflection Accuracy | Within ±4%. | |
| CALIBRATOR | | |
| Output Voltage (0°C to +40°C)<br>(−15°C to −55°C) | 0.3 V, within 1%. | 0.3 V, within 1.5%. |
| Repetition Rate | Approximately 1 kHz. | Within 25%. |
| Output Resistance | | Approximately 10.3 Ω. |
| Output Current | | |
| +20°C to +30°C | 30 mA, within 2%. | |
| −15°C to +55°C | | 30 mA, within 2.5%. |
| Z-AXIS INPUT | | |
| Sensitivity | 5-volt p-p signal causes noticeable modulation at normal intensity. | Positive-going signal decreases intensity. |
| Usable Frequency Range | Dc to 50 MHz. | |
| Maximum Input Voltage | | 25 V (dc + peak ac). |

For Service Manuals Contact
MAURITRON TECHNICAL SERVICES
8 Cherry Tree Rd, Chinnor
Oxon OX9 4QY
Tel:- 01844-351694 Fax:- 01844-352554
Email:- enquiries@mauritron.co.uk

**Table 1-1 (cont)**

| Characteristics | Performance Requirements | Supplemental Information |
|---|---|---|
| | SIGNAL OUTPUTS | |
| Channel 1 Output | | |
| Voltage | At least 50 mV per division into 1 MΩ. At least 25 mV per division into 50 Ω. | |
| Resistance | | Approximately 50 Ω. |
| Bandwidth | Dc to at least 50 MHz into 50 Ω. | |
| A and B Gates Output Resistance | | Approximately 500 Ω. |
| | POWER SOURCE | |
| Line Voltage Ranges | | |
| 115 V Nominal | | |
| (High) | 108V to 132 V. | |
| (Medium) | 104 V to 126 V. | |
| (Low) | 99 V to 121 V. | |
| 230 V Nominal | | |
| (High) | 216 V to 250 V. | |
| (Medium) | 208 V to 250 V. | |
| (Low) | 198 V to 242 V. | |
| Line Frequency | 48 Hz to 440 Hz. | |
| Power Consumption | | |
| Typical | 65 W at 115 V, 60 Hz, medium range. | |
| Maximum | 85 W at 115 V, 60 Hz, medium range. | |
| | CATHODE-RAY TUBE | |
| Display Area | 8 X 10 cm. | |
| Geometry | | 0.1 division or less of tilt or bowing. |
| Trace Rotation Range | | Adequate to align trace with horizontal center line. |

**Table 1-1 (cont)**

| Characteristics | Performance Requirements | Supplemental Information |
|---|---|---|
| | CATHODE-RAY TUBE (cont) | |
| Raster Distortion | | 0.1 division or less. |
| Standard Phosphor | P31. | |
| Optional Phosphor | P11. | |
| Nominal Accelerating Potential | | ≈18,500 V. |
| | DM44 | |
| Dc Voltage | | |
| Ranges | 0 to 1.2 kV in 5 steps: 200 mV, 2 V, 20 V, 200 V, and 1.2 kV. | |
| Resolution | 100 μV. | |
| Accuracy | Within 0.1% of reading, ±1 count. | |
| Input Resistance | 10 MΩ, all ranges (user has option to remove an internal wire strap to increase input resistance to 1000 MΩ on the 200 mV and 2 V ranges). | |
| Rejection Ratio | | |
| Normal Mode | At least 60 dB at 50 and 60 Hz. | |
| Common Mode | At least 100 dB at dc; 80 dB at 50 and 60 Hz. | |
| Recycle Time | Approximately 3.3 measurements per second. | |
| Response Time | Within 0.5 second. | |
| Temperature Dependence | 45 parts/million/°C. | |
| Maximum Safe Input Voltage, All Ranges | ±1200 V (dc + peak ac) between + and COM inputs or between + input and chassis. | |
| COM (Common) Floating Voltage | ±500 V (dc + peak ac) to chassis. | |
| Resistance | | |
| Ranges | 0 to 20 MΩ in six steps: 200 Ω, 2 kΩ, 20 kΩ, 200 kΩ, 2 MΩ, and 20 MΩ. | |
| Resolution | 0.1 Ω. | |

**Table 1-1 (cont)**

| Characteristics | Performance Requirements | Supplemental Information |
|---|---|---|
| | DM44 (cont) | |
| Accuracy<br>200 Ω and 2 kΩ Ranges | Within 0.25% ±1 count, + probe resistance. | |
| 20 kΩ, 200 kΩ, and 2 MΩ Ranges | Within 0.25%, ±1 count. | |
| 20 MΩ Range | Within 0.30%, ±1 count. | |
| Recycle Time | Approximately 3.3 measurements per second. | |
| Response Time<br>200 Ω through 200 kΩ Ranges | Within 1 second. | |
| 2 MΩ and 20 MΩ Ranges | Within 5 seconds. | |
| Maximum Safe Input Voltage | 120 V rms between + and COM inputs for an indefinite time. | 220 V rms between + and COM inputs for 1 minute or less. |
| Temperature Dependence<br>20 kΩ through 2 MΩ | | 250 parts/million/°C. |
| 200 Ω, 2 kΩ, and 20 MΩ Ranges | | 350 parts/million/°C. |
| Approximate current supplied to unknown resistance | | **Ω Range** / **Current**<br>200 Ω and 2 kΩ / 1 mA<br>20 kΩ / 100 μA<br>200 kΩ / 10 μA<br>2 MΩ / 1 μA<br>20 MΩ / 100 nA |
| Temperature<br>Range | −55°C to +150°C in one range. | |
| Accuracy (with constant temperature and infinite heat source) | **Ambient Temperature (°C)** / **Probe Tip Temperature (°C)** / **Accuracy (°C)** | |
| Probe Calibrated to DM44 | +15 to +35 / −55 to +150 / ±2 | |
| | −15 to +55 / −55 to +125 / ±3 | |
| | −15 to +55 / +125 to +150 / ±4 | |
| Probe Not Calibrated to DM44 | +15 to +35 / −55 to +150 / ±6 | |
| | −15 to +55 / −55 to +150 / ±8 | |

Table 1-1 (cont)

| Characteristics | Performance Requirements | Supplemental Information |
|---|---|---|
| | DM44 (cont) | |
| Time (Differential Delay) | | |
| Accuracy | | |
| +15°C to +35°C | Within 1% of reading, ±1 count. | |
| −15°C to +55°C | Within 2.5%, ±1 count. | |
| 1/TIME | | |
| Accuracy | | |
| +15°C to +35°C | Within 2% of reading, ±1 count. | |
| −15°C to +55°C | Within 3.5%, ±1 count. | |

Table 1-2

ENVIRONMENTAL CHARACTERISTICS

| Characteristics | Description |
|---|---|
| | NOTE: All of the following tests meet the requirements of MIL-T-28800B, Type III Class 3, Style D equipment. |
| Temperature | |
| Operating | −15°C to +55°C. |
| Non-operating | −62°C to +85°C. |
| Altitude | |
| Operating | To 15,000 ft. |
| Non-operating | To 15,000 m (50,000 ft). |
| Humidity (Operating and Non-operating) | Five cycles (120 hr) referenced to MIL-T-28800B, para 3.9.2.2. 95% to 97% relative humidity. |
| Vibration (Operating) | 15 minutes along each of three major axes at a total displacement of 0.025 inch p-p (4 g at 55 Hz) with frequency varied from 10 Hz to 55 Hz to 10 Hz in one minute sweeps. After sweep vibration in each axis, frequency held steady at each major resonance for 10 minutes, or if no such resonances found, held at 55 Hz for 10 minutes. |
| Shock (Operating and Non-operating) | 30 g, half-sine, 11-ms duration, 3 shocks per axis each direction, for a total of 18 shocks. |
| EMI | Meets MIL-STD-461A/462. |

Table 1-3

PHYSICAL CHARACTERISTICS

| Characteristics | Description |
|---|---|
| Weight | |
| With Panel Cover, Accessories, and Accessory Pouch | 11.5 kg (25.3 lb). |
| Without Panel Cover, Accessories and Accessory Pouch | 10.4 kg (22.8 lb). |
| Domestic Shipping Weight | 14.9 kg (32.7 lb). |
| Export Shipping Weight | Approximately 22 kg (48 lb). |
| Height | |
| With Feet and Pouch | 19.1 cm (7.5 in). |
| Without Pouch | 15.7 cm (6.2 in). |
| Width | |
| With Handle | 32.8 cm (12.9 in). |
| Without Handle | 29.2 cm (11.5 in). |
| Depth | |
| Including Panel Cover | 46.0 cm (18.1 in). |
| With Handle Extended | 51.6 cm (20.3 in). |

# OPERATING INSTRUCTIONS

This section of the manual provides information on instrument installation and power requirements and describes the functions of controls, connectors, and indicators. In addition, it includes procedures intended to familiarize the operator with obtaining basic oscilloscope displays. For more complete operating information, refer to 465B/DM44 Operators Manual.

## INSTALLATION

The 465B is shipped in its carton with the standard accessories listed on the Accessories tab page at the end of this manual. At installation time, save the shipping carton and packaging materials for repackaging. Refer to the Maintenance section of this manual for repackaging information.

## PREPARATION FOR USE

### Safety Considerations

**CAUTION**

*This instrument may be damaged if operated with the Line Voltage Selector switch or the Regulating Range Selector bar set for the wrong applied line voltage or if the wrong line fuse is used.*

Refer to the Safety Summary in the front of this manual for power source, grounding, and other safety considerations pertaining to use of the instrument. Before connecting the instrument to a power source, verify that the Line Voltage Selector switch and the Regulating Range Selector bar are both set for the line voltage being used, that the proper line fuse is installed, and that the line cord plug matches the power source to be used.

The 465B is designed to be used with a three-wire ac power system. If a three-to-two wire adapter is used to connect this instrument to a two-wire ac power system, be sure to connect the ground lead of the adapter to earth (ground). Failure to complete the ground system may allow the chassis of this instrument to be elevated above ground potential, thus posing a shock hazard.

### Line Voltage Selection

**WARNING**

*This instrument is designed for operation from a power source with its neutral at or near earth (ground) potential with a separate safety-earth conductor.*

This instrument operates from either a 115-volt or a 230-volt nominal line voltage source at 48 hertz to 440 hertz. To convert the instrument for operation from one line voltage range to the other, move the Line Voltage Selector switch located on the right side panel to the position indicating the correct nominal voltage.

The power cord plug may require replacement with a type matching the power source. If necessary, change the line cord plug. Refer to Table 2-1 for power cord conductor identification and to Figure 2-1 for illustrations of commonly-used power plugs.

**Table 2-1**

**POWER CORD CONDUCTOR IDENTIFICATION**

| Conductor | Color | Alternate Color |
|---|---|---|
| Ungrounded (Line) | Brown | Black |
| Grounded (Neutral) | Blue | White |
| Grounding (Earthing) | Green-Yellow | Green-Yellow |

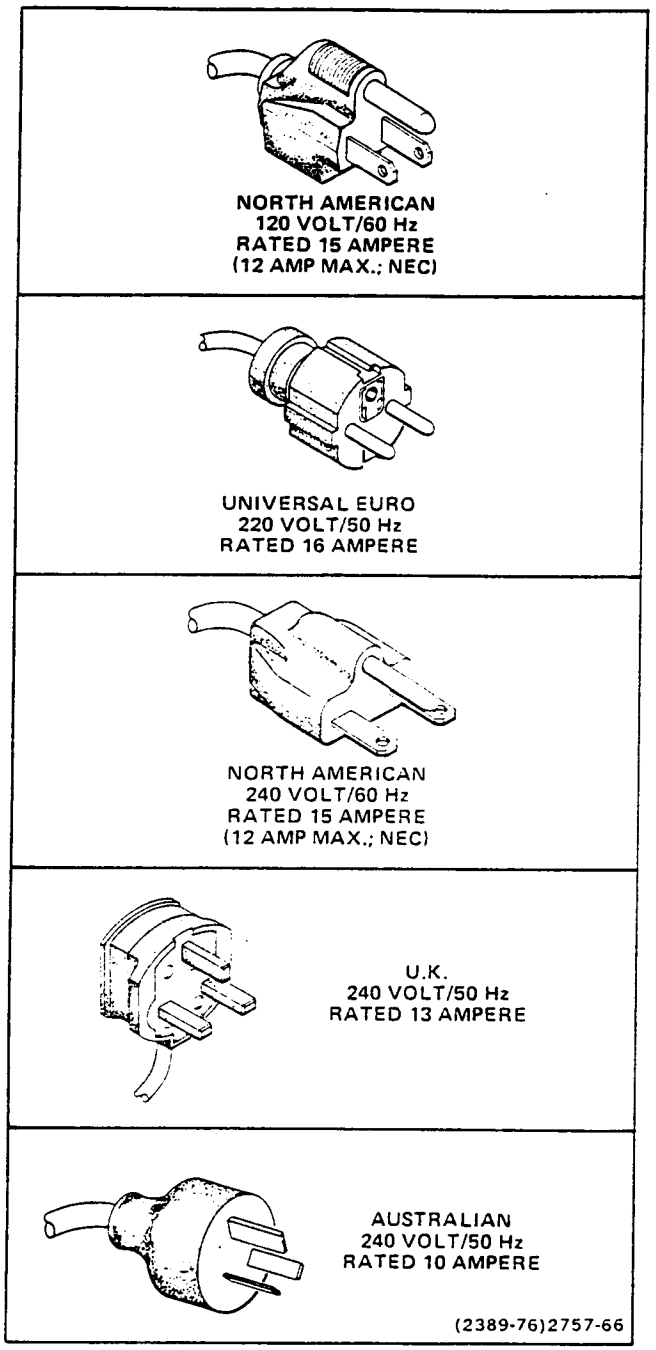


Figure 2-1. Commonly used power plugs.

## Regulating Range Selection

The Regulating Range Selector assembly located on the rear panel contains the Regulating Range Selector bar and the line fuse. Verify that the selector bar is set for the average line voltage being used and that the proper line fuse is installed. To change the regulating range:

1. Disconnect the instrument from its power source.

2. Loosen the two captive screws that hold the cover on the selector assembly; then pull to remove the cover.

3. Pull out the selector bar (see Figure 2-2). Select a range from Table 2-2 centered about the average line voltage and plug the selector bar into the desired position.

4. Insert the proper fuse (selected from Table 2-3) into its holder.

5. Gently push the cover on and tighten the captive screws.

6. Before applying power to the instrument, verify that the Line Voltage Selector switch and the indicating tab on the Regulating Range Selector assembly are in their correct positions for the desired nominal line voltage and regulating range.

**Table 2-2**

**REGULATING RANGE**

| Regulating Range Selector Bar Position | Regulating Range 115-Volt Nominal | Regulating Range 230-Volt Nominal |
|---|---|---|
| Upper Holes | 108 to 132 volts | 216 to 250 volts |
| Middle Holes | 104 to 126 volts | 208 to 250 volts |
| Lower Holes | 99 to 121 volts | 198 to 242 volts |

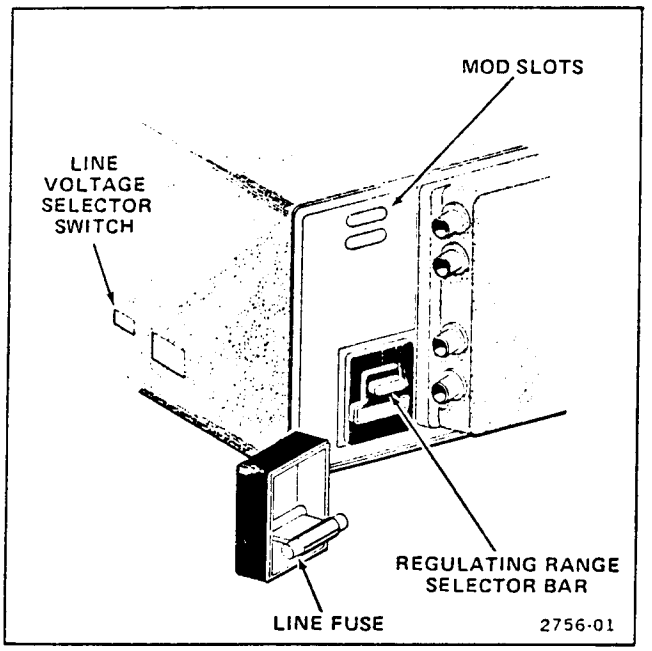


Figure 2-2. Regulating range selector and line fuse.

**Table 2-3**

**FUSE SELECTION**

| Line Voltage Selector Switch Position | Fuse Size |
|---|---|
| 115-Volt Nominal | 1.5 A, 3AG, Fast-blow |
| 230-Volt Nominal | 0.75 A, 3AG, Fast-blow |

### Instrument Cooling

To maintain adequate instrument cooling, the ventilation holes in the equipment cabinet must remain open, and the air filter must be cleaned or replaced when it gets dirty.

### Rackmounting

For rackmounting details refer to the rackmounting installation instructions at the end of this section.

# CONTROLS, CONNECTORS, AND INDICATORS

The major controls, connectors, and indicators for operation of the 465B are located on the front panel of the instrument. A few auxiliary functions are provided on the rear panel. Figures 2-3 through 2-7 show the front and rear panels of the instrument with the controls, connectors, and indicators called out. The circled numbers correspond to the discussions about particular controls, connectors, and indicators. If your instrument is equipped with a DM44 Digital Multimeter, refer to either the 465B/DM44 Operators Manual or the DM44 Service Manual for descriptions of DM44 controls, connectors, and indicators.

## VERTICAL

Refer to Figure 2-3 for location of items 1 through 11.

(1) **VOLTS/DIV Switches**—Select the vertical deflection factor for Channel 1 and Channel 2 in a 1-2-5 sequence. VAR control must be in the calibrated detent to obtain a calibrated deflection factor.

(2) **VOLTS/DIV Readouts**—Consist of two light emitting diodes (LED) for each channel, located beneath the skirt of each VOLTS/DIV knob. One LED or the other will light to indicate the correct deflection factor. The 10X LED is illuminated only when a 10X probe with a scale-switching coding-ring contact is connected to the input of the oscilloscope; otherwise, the 1X LED is illuminated.

(3) **VAR**—Provides continuously variable uncalibrated deflection factors between the calibrated settings of the VOLTS/DIV switches.

(4) **UNCAL Indicator**—A LED that lights when the VAR VOLTS/DIV control is out of the calibrated detent, and the vertical deflection factor is uncalibrated.

(5) **POSITION Controls**—Determine the vertical position of the display on the crt. In the X-Y mode, the Channel 2 POSITION control moves the display vertically (Y-axis), and the Horizontal POSITION control moves the display horizontally (X-axis).

(6) **CH 1 OR X and CH 2 OR Y bnc Connectors**—Provide for application of external signals to the inputs of the vertical amplifier. In the X-Y mode, the signal connected to the CH 1 OR X connector provides horizontal deflection, and the signal connected to the CH 2 OR Y connector provides vertical deflection. These connectors each include a coding ring that activates the scale-factor-switching circuit whenever a 10X scale-factor-switching probe is connected.

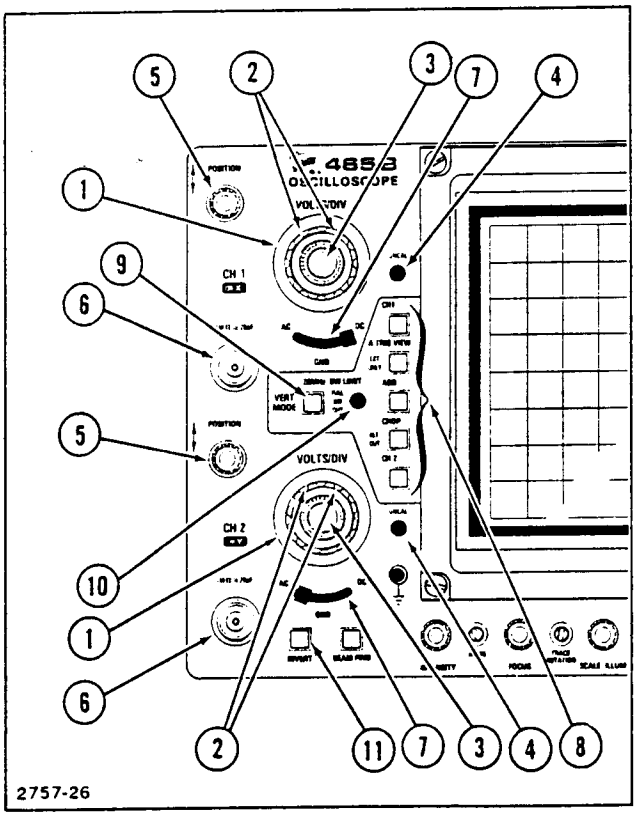


**Figure 2-3. Vertical controls, connectors, and indicators.**

(7) **AC-GND-DC Switch**—Selects the method used to couple a signal to the input of the vertical amplifier.

**AC position**—Signals are capacitively coupled to the vertical amplifier. The dc component of the input signal is blocked.

**GND position**—The input of the vertical amplifier is grounded to provide a ground reference and to allow the input coupling capacitor to precharge.

**DC position**—All frequency components of the input signal are passed to the vertical input amplifier.

(8) **VERT MODE Switches**—Select mode of operation for vertical amplifier system. When either CHOP or ALT mode is selected, display of any combination of CH 1, CH 2, ADD, and A TRIG VIEW (EXT ONLY) is allowed. When all buttons are out, a single trace will be displayed, provided that either TRIG MODE is in AUTO or TRIG MODE is in NORM with a triggerable signal applied to a vertical input connector. This trace will not display intelligence and is unaffected by position controls.

*NOTE*

*Four display traces may simultaneously be observed on the 465B crt. Each VERT MODE push button must be depressed and released a second time to remove the signal from the corresponding displays.*

**CH 1**—Displays Channel 1 signals when pushbutton is pressed in.

**A TRIG VIEW**—Displays the A external trigger input signal when push button is pressed in and when the A TRIGGER SOURCE switch is set to EXT or EXT/10.

**ADD**—Displays the algebraic sum of the Channel 1 and Channel 2 input signals when ADD push button is pressed in. The INVERT switch in Channel 2 allows the display to be either CH 1 plus CH 2 or CH 1 minus CH 2. The ADD capability is useful for common-mode rejection to remove an undesired signal or dc offset.

**CHOP ALT: OUT**—The 465B "chops" (switches) between two or more of the display modes at a 500-kHz rate when CHOP ALT: OUT button is pressed in. When released, the 465B "alternates" between two or more of the four display modes at the end of each trace sweep. CHOP and ALT functions are disabled if only one VERT MODE push button (CH 1, CH 2, ADD, or A TRIG VIEW) is selected or if the X-Y mode is selected.

**CH 2**—Displays Channel 2 signals when push button is pressed in.

(9) **20 MHz BW LIMIT (FULL BW OUT) Switch**—Limits the bandwidth of the vertical amplifier to approximately 20 MHz when pressed in. Push button must be depressed and released a second time to regain full 100-MHz bandwidth operation.

(10) **20 MHz BW LIMIT Indicator**—This LED is illuminated whenever the 20 MHz BW LIMIT push button is pressed in. and bandwidth is limited to 20 MHz.

(11) **INVERT**—Inverts Channel 2 display when push button is pressed in. Push button must be depressed and released a second time to present a noninverted display.

## DISPLAY AND CALIBRATOR

Refer to Figure 2-4 for location of items 12 through 19.

(12) **Internal Graticule**—Eliminates parallax. Risetime and amplitude measurement points are indicated at the left edge of the graticule.

(13) **BEAM FIND Switch**—Compresses the display to within the graticule area and provides a visible viewing intensity to aid in locating off-screen displays.

(14) **INTENSITY Control**—Determines overall brightness of the A Sweep and B Sweep crt displays. Interacts with B INTENSITY control on B Sweep crt displays.

(15) **FOCUS Control**—Adjusts for optimum display definition.

(16) **CALIBRATOR Loop**—A combination 30-milliamp current loop and 0.3-volt square-wave voltage output (approximately 1 kilohertz) that permits the operator to compensate voltage probes and to check oscilloscope vertical operation. It is not intended to verify precise time-base calibration.

(17) **SCALE ILLUM Control**—Adjusts graticule illumination.

(18) **ASTIG Control**—Screwdriver control used in conjunction with the FOCUS control to obtain a well-defined display. It does not require readjustment during normal use of the instrument.

(19) **TRACE ROTATION Control**—Screwdriver control used to align trace with the horizontal graticule lines.

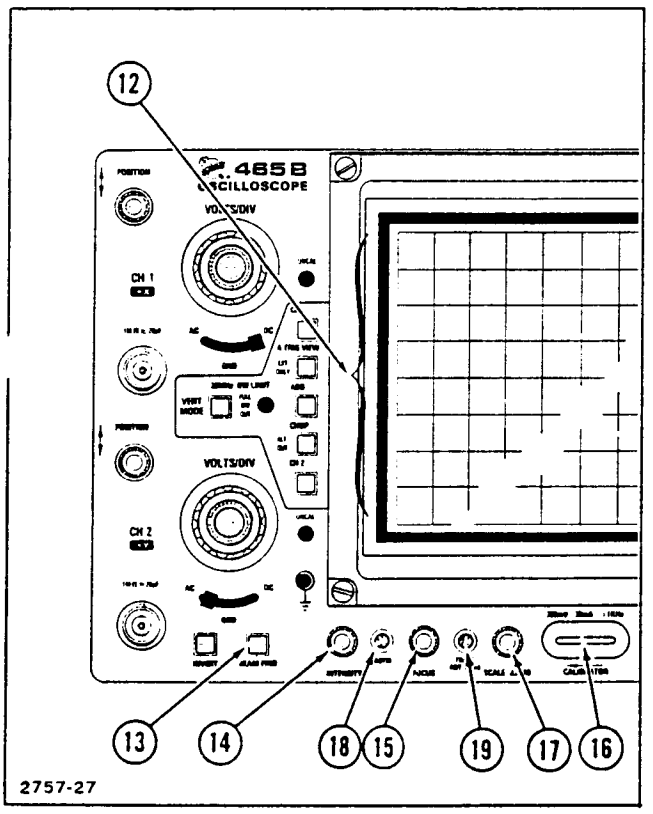


Figure 2-4. Display controls and calibrator.

## TRIGGER
## (A and B where applicable)

Refer to Figure 2-5 for location of items 20 through 28.

(20) **TRIG MODE Switches**—Three push button switches determine the mode of trigger operation for the A Sweep.

**AUTO**—Sweep is initiated by the applied trigger signal. In the absence of an adequate trigger signal, or if the trigger repetition rate is less than about 20 hertz, the sweep free runs and provides a bright reference trace.

**NORM**—Sweep is initiated by the applied trigger signal. In the absence of an adequate trigger signal, there is no trace. When the trigger rate is too low for AUTO, use NORM.

**SINGL SWP**—When this push button is pressed, the A Sweep operates in the single-sweep mode. After a single sweep is displayed, further sweeps cannot be presented until the SINGL SWP push button is again pressed. SINGL SWP is useful in displaying and photographing either non-repetitive signals or signals that cause unstable conventional displays (e.g., signals that vary in amplitude, shape, or time).

(21) **READY Indicator**—LED illuminates to indicate that A Sweep is "armed" and will present a single-sweep display upon receipt of an adequate trigger signal.

(22) **TRIG Indicator**—LED illuminates to indicate that A Sweep is triggered and will produce a stable display. It is useful for setting up the trigger circuits when a trigger signal is available without a display on the crt (for example, when using external triggers).

(23) **A TRIGGER HOLDOFF Control**—Provides continuous control of time between sweeps. Allows triggering on aperiodic signals (such as complex digital words). In the fully clockwise position (B ENDS A), the A Sweep is automatically terminated at the end of the B Sweep to provide the fastest possible sweep repetition rate for delayed-sweep presentations and low-repetition rate signals. In this position, Holdoff is approximately ten times NORM. Use the A trigger controls for most stable triggering before setting the A TRIGGER HOLDOFF control to a position other than NORM.

(24) **COUPLING Switch**—Determines method used to couple signals to the trigger generator circuit.

**AC**—Signals are capacitively coupled to the input of the trigger circuit. Dc is rejected, and signals below about 30 hertz are attenuated. Triggering is allowed only on the ac portion of the vertical signal.

**LF REJ**—Signals are capacitively coupled to the input of the trigger circuit. Dc is rejected, and signals below about 50 kilohertz are attenuated. It is useful for providing a stable display of the high-frequency components of a complex waveform.

**HF REJ**—Signals are capacitively coupled to the input of the trigger circuit. Dc is blocked, and signals below about 30 hertz and above 50 kilohertz are attenuated. It is useful for providing a stable display of the low-frequency components of a complex waveform.

**DC**—All frequency components of a trigger signal are coupled to the input of the trigger circuit. It is useful for providing a stable display of low-frequency or low-repetition rate signals.

(25) **SLOPE Switch**—Selects the slope of the signal that triggers the sweep.

+: Sweep can be triggered from the positive-going portion of a trigger signal.

−: Sweep can be triggered from the negative-going portion of a trigger signal.

(26) **LEVEL Control**—Selects the amplitude point on the trigger signal at which the sweep is triggered. It is usually adjusted for the desired display after trigger SOURCE, COUPLING, and SLOPE have been selected.

(27) **SOURCE Switch**—Determines the source of the trigger signal coupled to the input of the trigger circuit.

**NORM**—Trigger source is a sample of the signal displayed on the crt.

**CH 1**—A sample of the signal applied to the Channel 1 input is used as a trigger signal. Channel 2 signal is unstable if it is not time-related.

**CH 2**—A sample of the signal applied to the Channel 2 input is used as a trigger signal. Channel 1 crt display is unstable if it is not time-related.

**LINE (A Trigger Circuit Only)**—A sample of the power-line sinusoidal waveform is used as a trigger signal. It is useful when the input signal is time-related (multiple or submultiple) to the line frequency or when it is desirable to provide a stable display of a line-frequency component in a complex waveform.

**EXT**—Signals connected to the External Trigger input connectors are used for triggering. External signals must be time-related to the displayed signal for a stable display. It is useful when the internal signal is either too small or contains undesired signals that could cause unstable triggering. It is also useful when operating in the CHOP mode. EXT and EXT/10 trigger signals may be viewed on the crt by selecting A TRIG VIEW on the VERT MODE switch.

**EXT/10 (A Trigger Circuit Only)**—External trigger signal is attenuated by a factor of 10.

**STARTS AFTER DELAY (B Trigger Circuit Only)**—B Sweep starts immediately after the delay time selected by the DELAY TIME POSITION control and is independent of the B Trigger signal. When making differential time measurements, you must use this mode to obtain valid measurements. On instruments equipped with a DM44 you must use this mode to obtain valid measurements when using the TIME or 1/TIME functions.

(28) **External Trigger Input Bnc Connectors**—Connect external trigger input signals for A TRIGGER and B (DLY'D) TRIGGER circuits, when either EXT or EXT/10 (A Trigger only) SOURCE is selected.

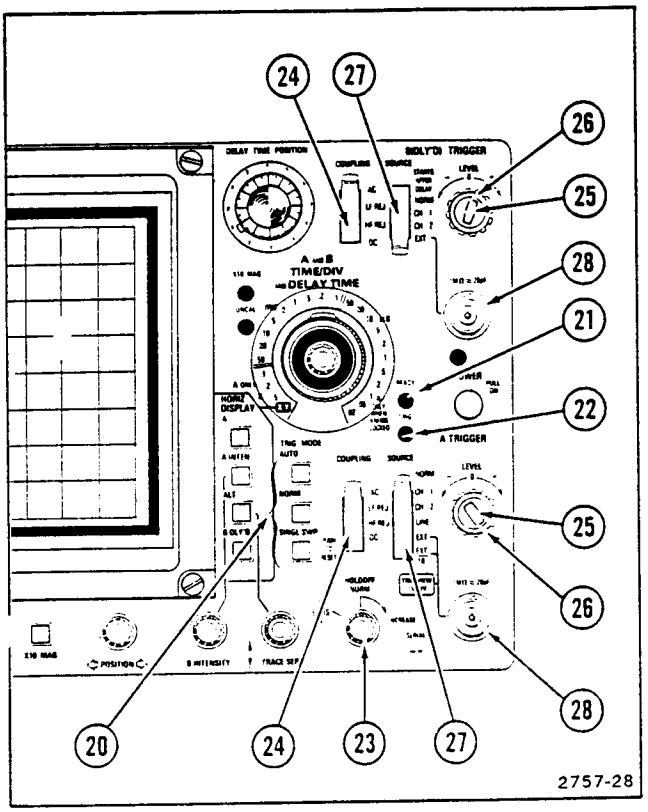


Figure 2-5. Trigger controls, connectors, and indicators.

## HORIZONTAL AND POWER

Refer to Figure 2-6 for location of items 29 through 40.

(29) **A AND B TIME/DIV AND DELAY TIME Switches**—A TIME/DIV (clear plastic skirt) selects the sweep rate of the A Sweep circuit for A Sweep operation only. Also selects the basic delay time (used in conjunction with the DELAY TIME POSITION control) for delayed sweep operation. B TIME/DIV switch (pull out and rotate to unlock) selects the sweep rate for the B Sweep circuit for delayed sweep operation only. VAR control must be in the calibrated detent for calibrated A Sweep rates. When the A TIME/DIV switch is rotated fully counterclockwise to the X-Y position, the horizontal (X-axis) deflection is controlled by the Channel 1 input signal.

(30) **POSITION Control**—Positions the display horizontally for A Sweep and B Sweep, or on the X-axis (horizontally) in the X-Y mode. Provides both coarse and fine control action. Reverse the direction of rotation to actuate fine positioning action.

(31) **X10 MAG Switch**—When pressed in, increases displayed sweep rate by a factor of 10. Extends fastest sweep rate to 2 nanoseconds/division. The magnified sweep expands the center division of the unmagnified display (0.5 division either side of the center graticule line).

(32) **VAR Control**—Provides continuously variable sweep rates between the calibrated settings of the A TIME/DIV switch. It extends the slowest A Sweep rate to at least 1.25 seconds/division. The A Sweep rate is calibrated when the control is set fully clockwise to the calibrated detent. It must be in the detent position to make accurate differential time measurements. On instruments equipped with a DM44, the VAR control must be in the detent position to make accurate measurements in the TIME and 1/TIME functions.

(33) **UNCAL Indicator**—LED illuminates to indicate that the A Sweep rate is uncalibrated (VAR control is out of the calibrated detent).

(34) **X10 MAG Indicator**—LED illuminates to indicate that the X10 magnifier is on.

(35) **DELAY TIME POSITION Control**—Selects the amount of delay time between the start of A Sweep and start of B Sweep. Delay time is variable to at least 10 times the time indicated by the A TIME/DIV switch.

(36) **POWER Switch**—PULL ON turns instrument power on; button pushed in turns power off.

(37) **POWER ON Indicator**—LED illuminates when power is applied to the instrument.

(38) **HORIZ DISPLAY Switches**—Four push button switches determine the mode of operation for the horizontal deflection system.

**A**—Horizontal deflection is provided by A Sweep at a sweep rate determined by the setting of the A TIME/DIV switch. Only A Sweep is displayed; B Sweep is inoperative.

**A INTEN**—Displays the A Sweep at a rate determined by the A TIME/DIV switch. An intensified portion can appear on the display during the B Sweep time. This switch position provides an indication of both the duration and position of the B Sweep (delayed sweep) with respect to the A Sweep (delaying sweep).

**ALT**—Alternates the displays between the A INTEN and B DLY'D Sweeps. In ALT operation, use TRACE SEP to vertically position B Trace; use B INTENSITY control to adjust B Trace intensity.

**B DLY'D**—Displays only the B Sweep. The B Sweep rate is determined by the B TIME/DIV switch, with the delay time determined by the setting of both the A TIME/DIV switch and the DELAY TIME POSITION control.

(39) **TRACE SEP Control**—Positions the B Sweep vertically when the ALT HORIZ DISPLAY mode is selected.

(40) **B INTENSITY Control**—Determines the intensity of the B Trace (interacts with INTENSITY control).

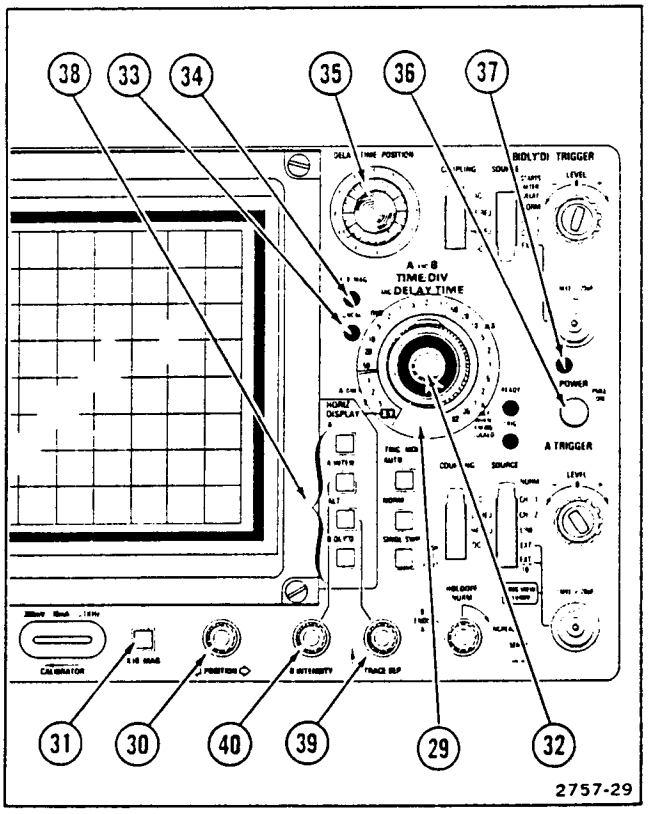


**Figure 2-6. Horizontal and power connectors, controls, and indicators.**

## REAR PANEL

Refer to Figure 2-7 for location of items 41 through 50.

(41) **A +GATE**—Output bnc connector provides a positive-going pulse coincident with the A Sweep time.

(42) **B +GATE**—Output bnc connector provides a positive-going pulse coincident with the B Sweep time.

(43) **CH 1 VERT SIGNAL OUT**—Output bnc connector provides a sample of the signal applied to the Channel 1 preamplifier via the input connector.

(44) **EXT Z-AXIS**—Input bnc connector permits the application of an external signal to intensity modulate the crt display. Does not affect display wave-shape. Signals with fast rise time and fall time provide the most abrupt intensity change. Signals must be time-related to the display for a stable presentation on the crt. The connector is useful for adding time markers in uncalibrated modes of operation.

(45) **Regulating Range Selector Bar**—Selects the regulating range of the 465B power supplies to match the available power input source. It is shown on Figure 2-2 in the Medium regulating range. See Table 2-2 for change information.

(46) **Line Fuse Holder**—Contains the line fuse and the regulating range selector. See Table 2-3 for change information.

(47) **Line Cord**—Makes the connection between the oscilloscope and the power source. The cord may be conveniently stored by wrapping around the feet on rear panel.

(48) **MOD Slots**—A number in either slot indicates the instrument contains an option or other modification.

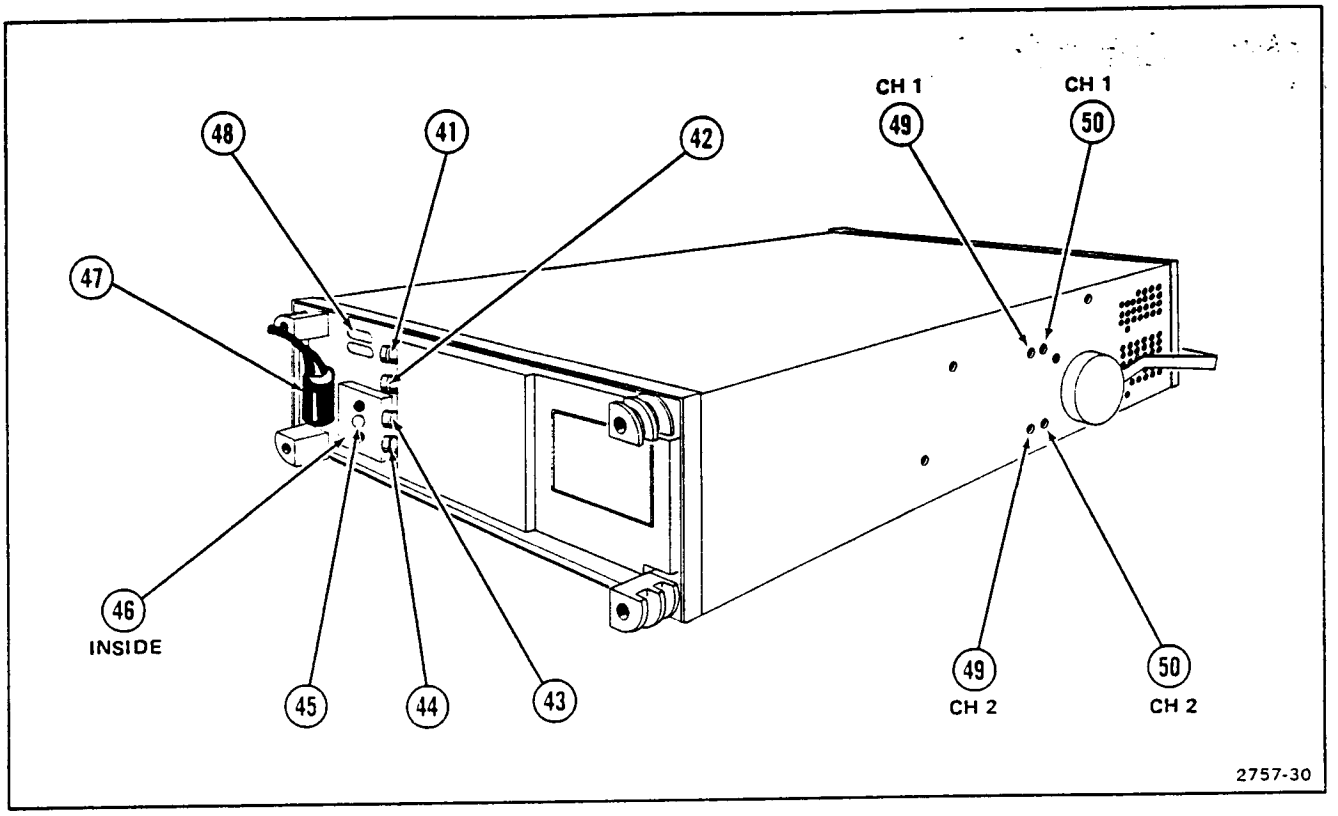


Figure 2-7. Rear panel and left side panel controls, connectors, and indicators.

## LEFT SIDE PANEL

(49) **Vertical Gain Controls (accessible through left side panel)**—Screwdriver adjustments to set the gain of the vertical channels.

(50) **Variable Balance Controls (accessible through left side panel)**—Screwdriver adjustments to set balance of the vertical channels.

## RIGHT SIDE PANEL

(51) **Line Voltage Selector Switch**—Selects either 115 volts or 230 volts nominal line voltage. Refer to Table 2-2 for ranges and to Figure 2-2 for location of the switch. Change the fuse to match the range selected.

# BASIC OSCILLOSCOPE DISPLAYS

The procedures in this subsection will allow you to set up and operate your instrument to obtain the most commonly used basic oscilloscope displays. Before proceeding with these instructions, verify that the Line Voltage Selector switch and the Regulating Range Selector bar are placed in the proper positions and that the correct fuse is installed for the line voltage being used. Refer to the preceding Preparation for Use subsection for the information and procedures relating to line voltage, regulating range, and fuse selection. Verify that the POWER switch is off (push button pressed in) before plugging the power cord into the line voltage socket.



@

## PRESET INSTRUMENT CONTROLS

Preset the instrument controls as follows:

**Vertical**

| | |
|---|---|
| VERT MODE | CH 1 |
| VOLTS/DIV | Proper setting determined by amplitude of signal to be applied |
| VOLTS/DIV VAR | Calibrated detent |
| AC-GND-DC | AC |
| POSITION | Midrange |
| 20 MHz BW LIMIT | Not limited (push button out) |
| INVERT | Off (push button out) |

**Display**

| | |
|---|---|
| INTENSITY | Fully counterclockwise |
| FOCUS | Midrange |
| SCALE ILLUM | Midrange |

**Horizontal**

| | |
|---|---|
| TIME/DIV Switches | Locked together at 1 ms |
| A TIME/DIV VAR | Calibrated detent |
| HORIZ DISPLAY | A |
| X10 MAG | Off (push button out) |
| POSITION | Midrange |

**Trigger**
**(Both A and B if applicable)**

| | |
|---|---|
| SLOPE | + |
| LEVEL | 0 |
| SOURCE | NORM |
| COUPLING | AC |
| TRIG MODE (A only) | AUTO |
| HOLDOFF | NORM |

## NORMAL SWEEP DISPLAY

1. Preset instrument controls and pull the POWER switch (on). After allowing the instrument to warm up, connect a signal to the CH 1 input connector.

*NOTE*

*Instrument warmup time required to meet all specification accuracies is 20 minutes.*

2. Adjust the INTENSITY control for the desired display brightness. If the display is not visible with the INTENSITY control at midrange, press the BEAM FIND push button and hold it in while adjusting the CH 1 VOLTS/DIV switch to reduce the vertical display size. Center the compressed display using the vertical and horizontal POSITION controls; release the BEAM FIND push button. Adjust the LEVEL control if necessary.

3. Set the CH 1 VOLTS/DIV switch and the vertical and horizontal POSITION controls to locate the display within the graticule area.

4. Adjust the A TRIGGER LEVEL control for a stable display.

5. Set the A TIME/DIV switch for the desired number of cycles of displayed signal; then adjust the FOCUS control as necessary.

## MAGNIFIED SWEEP DISPLAY

1. Preset instrument controls and obtain a Normal Sweep Display.

2. Adjust the horizontal POSITION control to move the area to be magnified to within the center graticule division of the crt (0.5 division on each side of the center vertical graticule line). Change the TIME/DIV switch setting as desired.

3. Push the X10 MAG switch (on) and adjust the horizontal POSITION control for precise positioning of the magnified display. Divide the TIME/DIV setting by 10 to determine the magnified sweep rate.

## DELAYED SWEEP DISPLAY

1. Preset instrument controls and obtain a Normal Display.

*NOTE*

*Differential time measurements and measurements using the TIME or 1/TIME functions of the DM44 are invalid when the B TRIGGER SOURCE switch is not set to STARTS AFTER DELAY.*

2. Set the HORIZ DISPLAY switch to A INTEN and the B TRIGGER SOURCE switch to STARTS AFTER DELAY.

3. Pull out on the B TIME/DIV knob and turn clockwise from counterclockwise stop until the intensified zone is the desired length. Adjust the INTENSITY and B INTENSITY controls as needed to make the intensified zone distinguishable from the rest of the display. If your instrument is equipped with a DM44, select a function other than TIME or 1/TIME for a single delayed sweep.

4. Adjust the DELAY TIME POSITION control to move the intensified zone to cover the portion of the display that will be displayed in delayed form.

5. Set the HORIZ DISPLAY switch to B DLY'D. The intensified zone adjusted in steps 3 and 4 is now displayed in delayed form. The delayed sweep rate is indicated by the dot on the B TIME/DIV knob.

6. To obtain a delayed display with less jitter, set the B TRIGGER SOURCE switch to the same position as the A TRIGGER SOURCE switch and adjust the B TRIGGER LEVEL control for a stable display.

## ALTERNATE SWEEP DISPLAY

1. Preset instrument controls and obtain a Normal Sweep Display.

2. Pull out on the B TIME/DIV knob to unlock it and turn clockwise to the desired sweep rate.

3. Set the HORIZ DISPLAY switch to ALT. Set B (DLY'D) TRIGGER SOURCE to STARTS AFTER DELAY. Adjust Channel 1 POSITION and TRACE SEP as required to display A Sweep above B Sweep. This will provide a display that alternates between A INTEN trace (upper) and B DLY'D trace (lower). Adjust B INTENSITY as necessary to view the B DLY'D trace.

4. The start of B Sweep may be changed by adjusting the DELAY TIME POSITION control.

5. If the instrument is equipped with a DM44 and a time difference (or period) measurement is desired, select the TIME function and adjust the Δ TIME control to move the time-measurement point with respect to the reference point.

6. The display now contains a second intensified zone on the A INTEN trace (upper) and a second signal, which may be partially or fully superimposed, on the B DLY'D trace (lower).

7. The DELAY TIME POSITION control will change the position of both delayed displays (reference and time measurement), while the Δ TIME control will position only the second (measurement point) delayed display.

## SINGLE SWEEP DISPLAY

1. Preset instrument controls and obtain a Normal Sweep Display. For random signals, set the trigger circuit to trigger on a signal that is approximately the same amplitude and frequency as the random signal.

2. Press the SINGL SWP push button on the A TRIG MODE switch. The next trigger pulse starts the sweep and displays a single trace. If no triggers are present, the READY indicator should illuminate, indicating that the A Sweep Generator circuit is set and waiting for a trigger.

3. When the sweep is complete, the circuit is "locked out", and the READY indicator turns off.

4. Press the SINGL SWP push button again to prepare the circuit for another Single Sweep Display.

## X-Y DISPLAY

1. Preset instrument controls and pull the POWER switch (on). Allow the instrument to warm up.

2. Set the A TIME/DIV switch fully counterclockwise to X-Y. Apply the vertical signal to the CH 2 OR Y input connector and the horizontal signal to the CH 1 OR X input connector.

3. Advance the INTENSITY control until the display is visible. If the display is not visible with the INTENSITY control at midrange, press and hold in the BEAM FIND push button while adjusting the CH 1 and CH 2 VOLTS/DIV switches until the display is reduced in size, both vertically and horizontally. Center the compressed display with the POSITION controls (Channel 2 POSITION control for vertical movement, and horizontal POSITION control for horizontal movement). Release the BEAM FIND push button. Adjust the FOCUS control for a well-defined display.

# RACKMOUNTING

The TEKTRONIX R465B Oscilloscope is designed to mount in a 19-inch rack. When mounted in accordance with the following mounting procedure, the instrument will meet all electrical and environmental characteristics given in Section 1 of this manual.

## DIMENSIONS

Dimensional drawings of the R465B are shown in Figures 2-8 and 2-9.

### Rack Height

At least seven inches of vertical space is required to mount this instrument in a rack.

### Rack Width

Minimum width of the opening between the left and right front rails of the rack must be 17 5/8 inches. This allows room on each side of the instrument for the slide-out tracks to operate freely, permitting the instrument to move smoothly in and out of the rack.

### Rack Depth

Total depth necessary to mount the R465B in a cabinet is 18 inches. This allows room for air circulation, power cord and signal connections and the necessary mounting hardware.

## SLIDE-OUT TRACKS

The slide-out tracks provided with the R465B permit it to be extended out of the rack for maintenance or calibration without removing the instrument from the rack. In the fully extended position, the R465B can be tilted up so the bottom of the instrument can be reached for maintenance or calibration. To operate the R465B in the extended position, be sure the power cord and any interconnecting cables are long enough for this purpose.

The slide-out tracks consist of two assemblies—one for the left side of the instrument and one for the right side. Figure 2-10 shows the complete slide-out track assemblies. The stationary section of each assembly attaches to the front and rear rails of the rack, and the chassis section is attached to the instrument. The intermediate section slides between the stationary and chassis sections and allows the R465B to be extended out of the rack. When the instrument is shipped, the stationary and immediate sections of the tracks are packaged as matched sets and should not be separated. To identify the left or right assembly, note the position of the automatic latch (see Figure 2-10). When mounted in the rack, the automatic latch should be at the top of both assemblies. The chassis sections are installed on the instrument at the factory.

The hardware needed to mount the slide-out tracks is shown in Figure 2-11. Since the hardware supplied is intended to make the tracks compatible with a variety of cabinet racks and installation methods, not all of it will be needed for this installation. Use only the hardware that is required for the mounting method used.

For Service Manuals Contact
MAURITRON TECHNICAL SERVICES
8 Cherry Tree Rd, Chinnor
Oxon OX9 4QY
Tel:- 01844-351694 Fax:- 01844-352554
Email:- enquiries@mauritron.co.uk



@

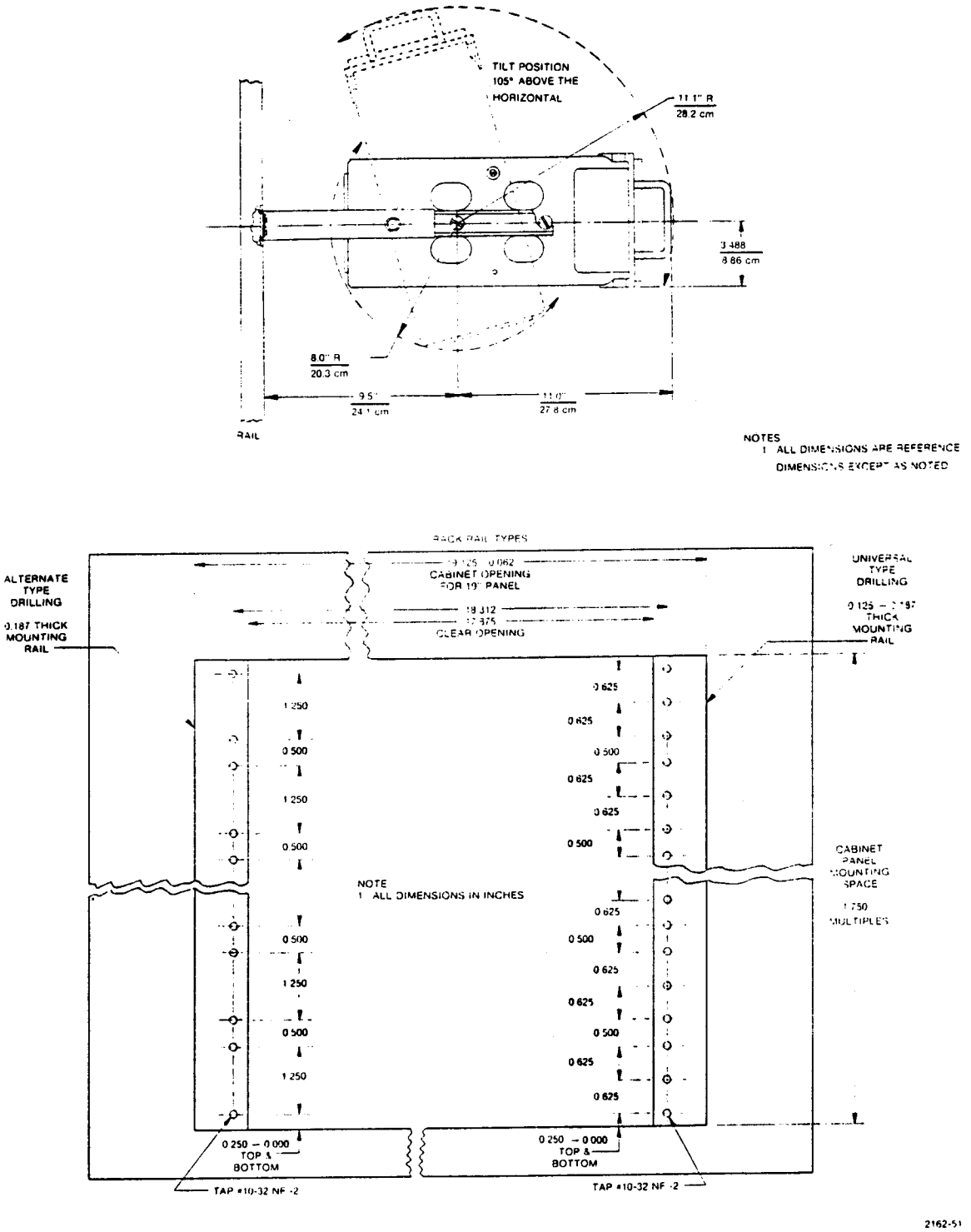


Figure 2-8. Dimensional drawing.

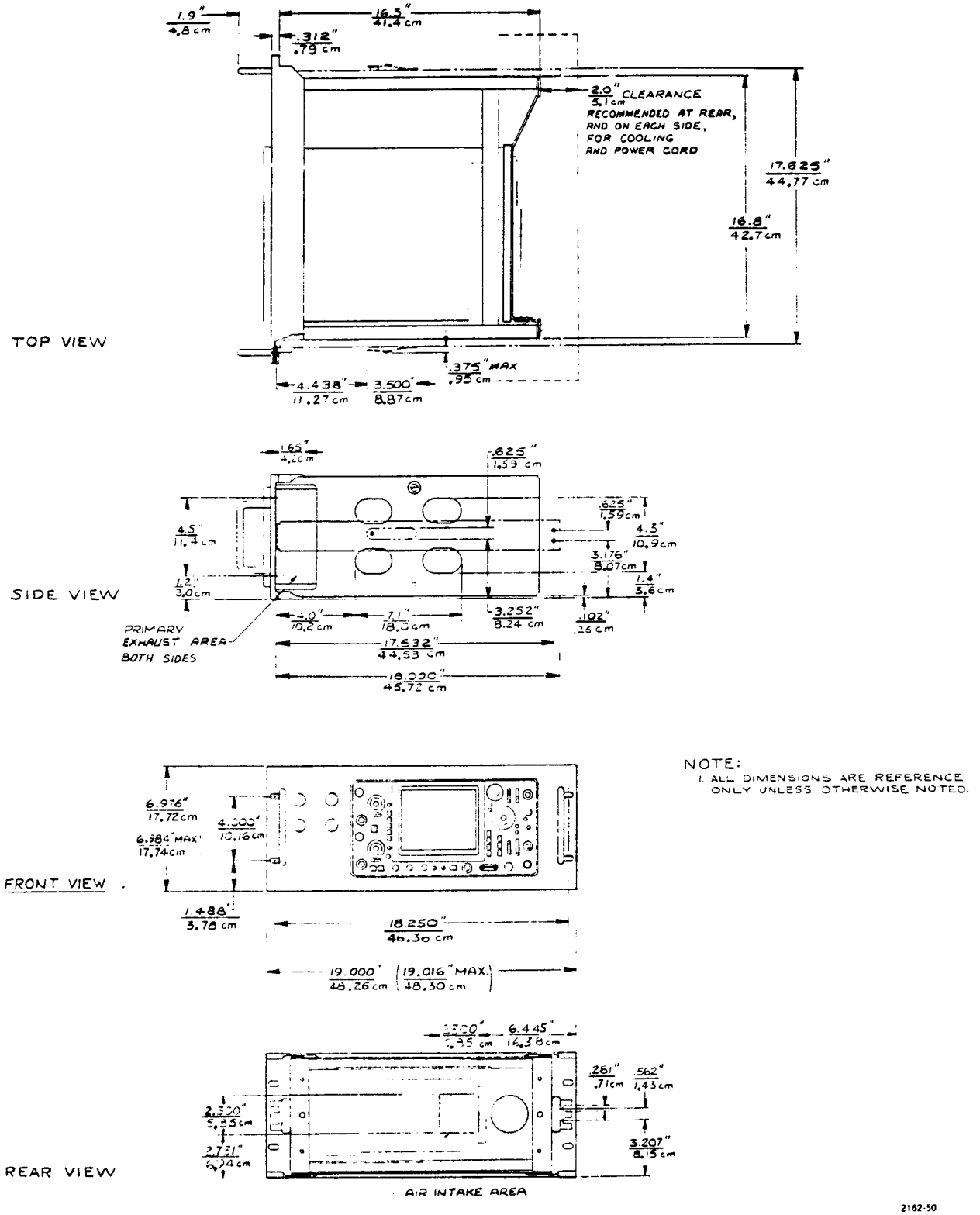


Figure 2-9. Dimensional drawing (cont).

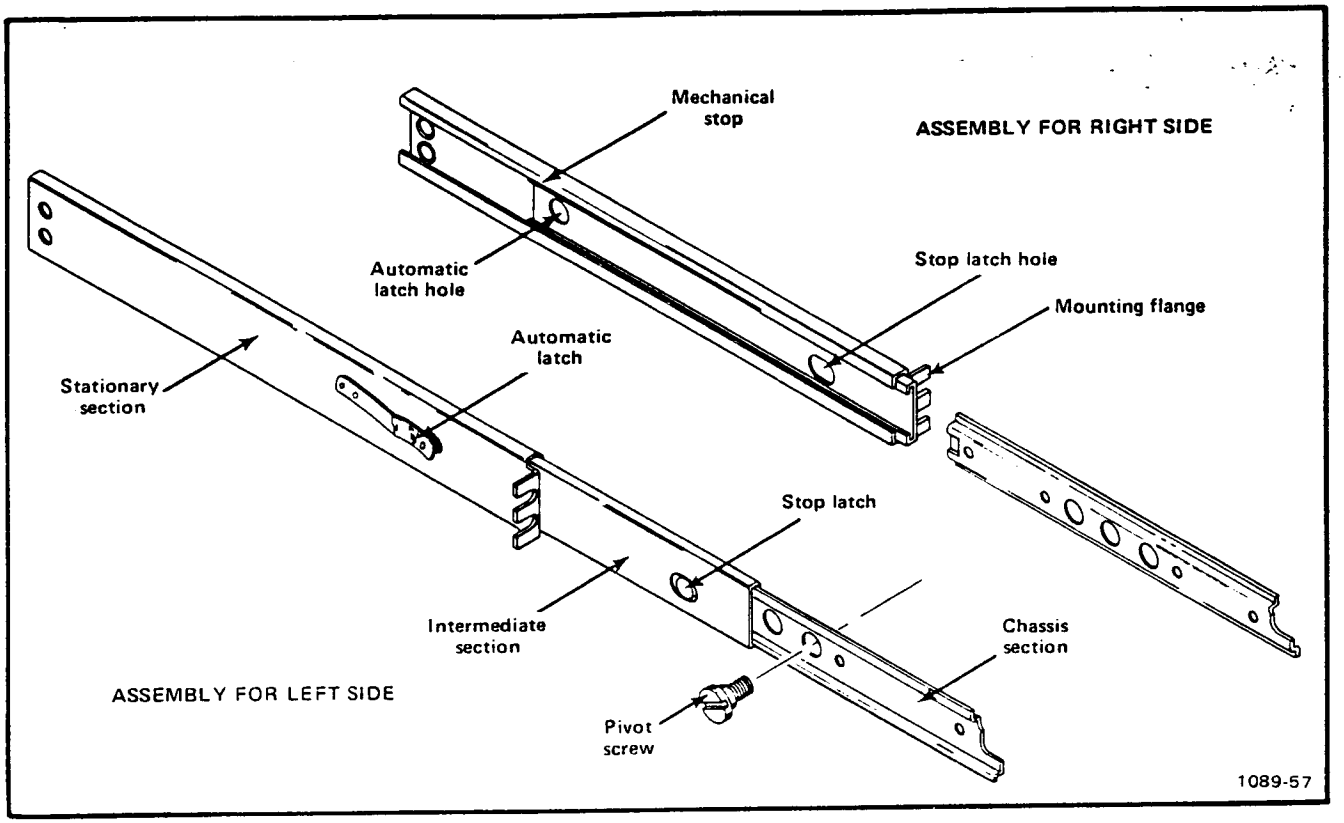


Figure 2-10. Slide-out track assemblies.

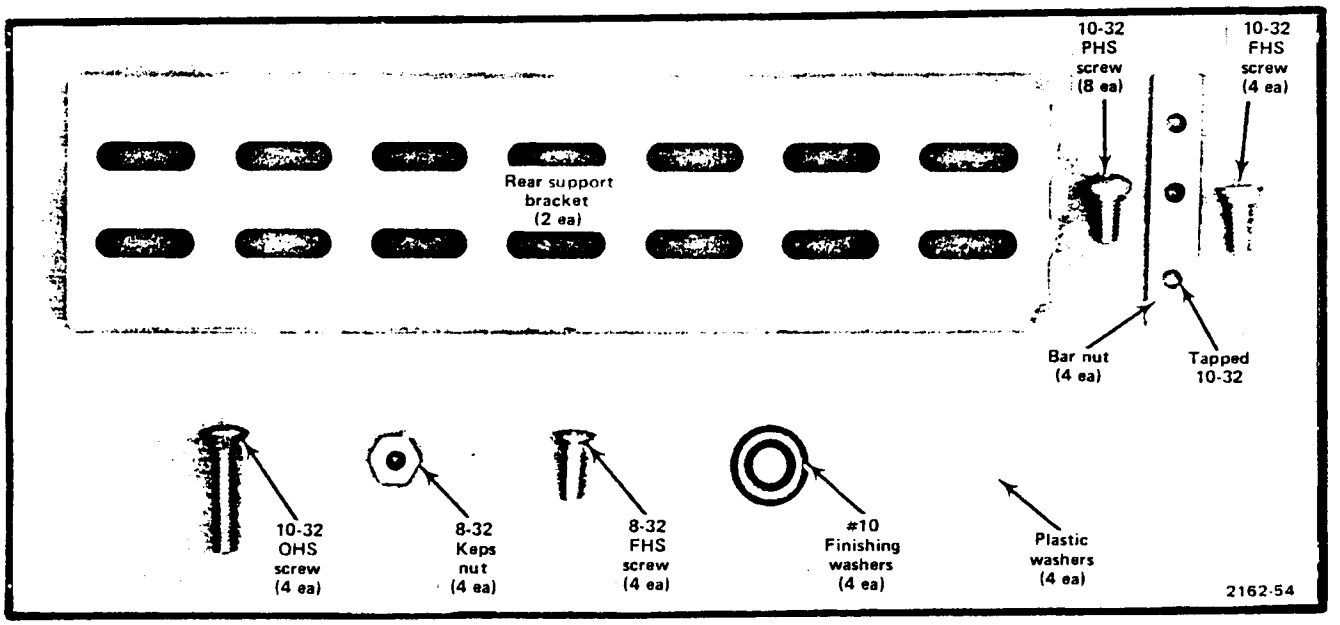


Figure 2-11. Hardware needed to mount the instrument in the cabinet rack.

## MOUNTING PROCEDURE

The following mounting procedure uses the rear support kit (see Figures 2-12 and 2-13) to meet the environmental characteristics of the instrument (shock and vibration). Two alternative mounting methods are described at the end of this procedure. However, when mounted according to these alternative methods, the instrument may not meet the given environmental characteristics for shock and vibration.

The mounting flanges of the stationary sections may be mounted in front of or behind the front rails of the rack depending on the type of rack. If the front rails of the rack are tapped for 10-32 screws, the mounting flanges are placed in front of the rails. If the front rails of the rack are not tapped for 10-32 screws, the mounting flanges are placed behind the front rail and a bar nut is used. Figure 2-14 shows these methods of mounting the stationary sections.

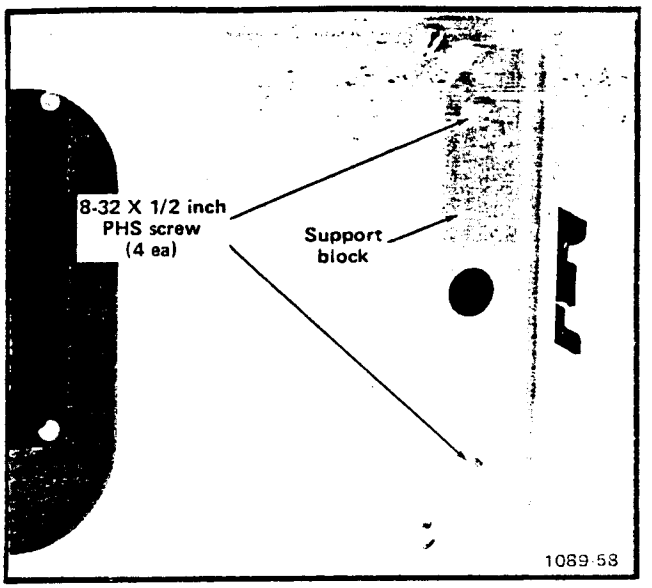


Figure 2-13. Installing the support block on the instrument.

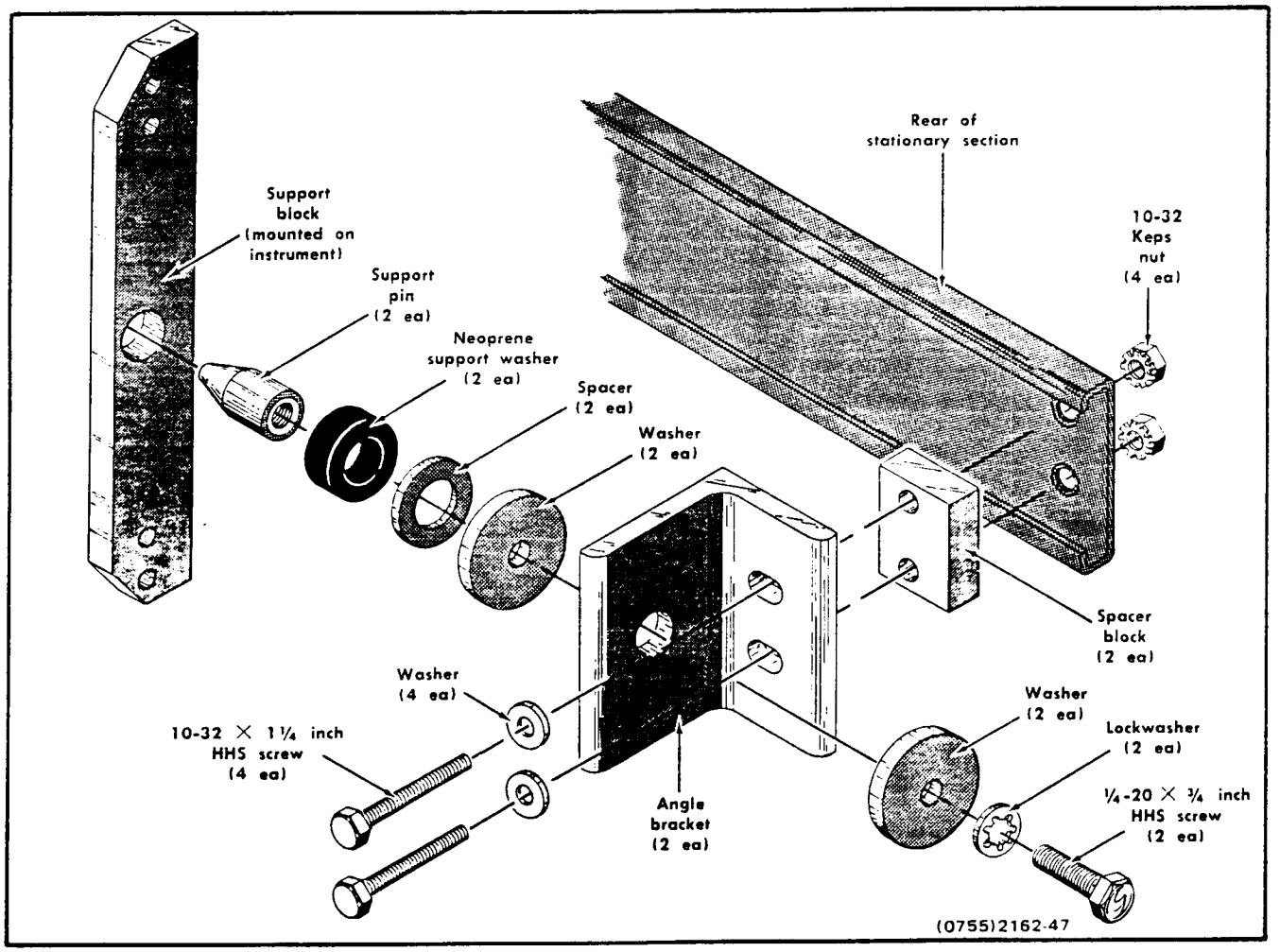


Figure 2-12. Rear support kit.

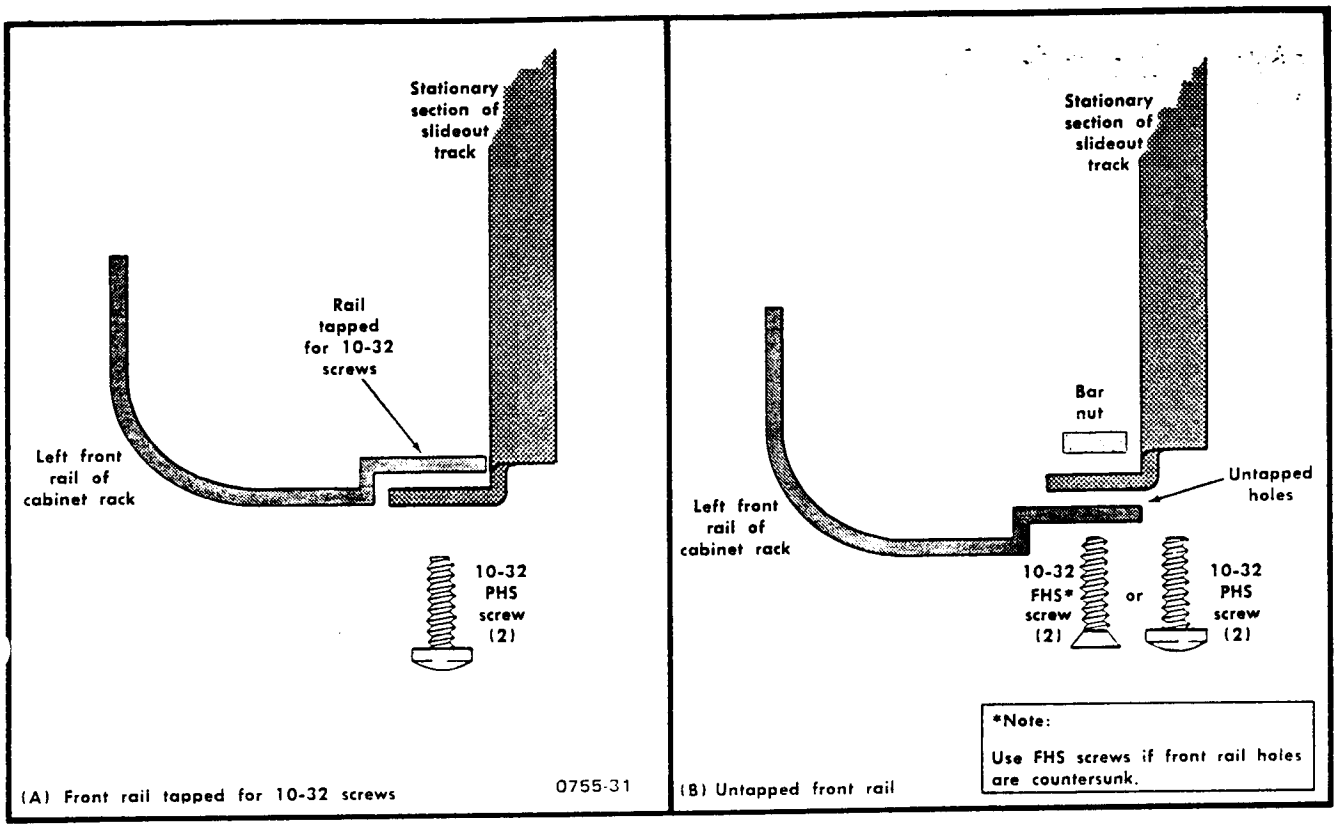


Figure 2-14. Methods of mounting the stationary section to the front rails.

The rear of the stationary sections must be firmly supported to provide a shock-mounted installation. This rear support must be located 17.471 inches, ±0.031 inch, from the outside surface of the front rail when the mounting flange is mounted outside of the rail, or 17.531 inches, ±0.031 inch, from the rear surface of the front rail when the mounting flange is mounted behind the front rail. If the cabinet rack does not have a strong supporting member located the correct distance from the front rail, an additional support must be added. The instrument will not meet the environmental specifications unless firmly supported at this point. Figure 2-14 illustrates a typical rear installation using the rear support kit and gives the necessary dimensions.

Use the following procedure to install the R465B in a rack:

1. Select the proper front-rail mounting holes for the stationary section using the measurements shown in Figure 2-15.

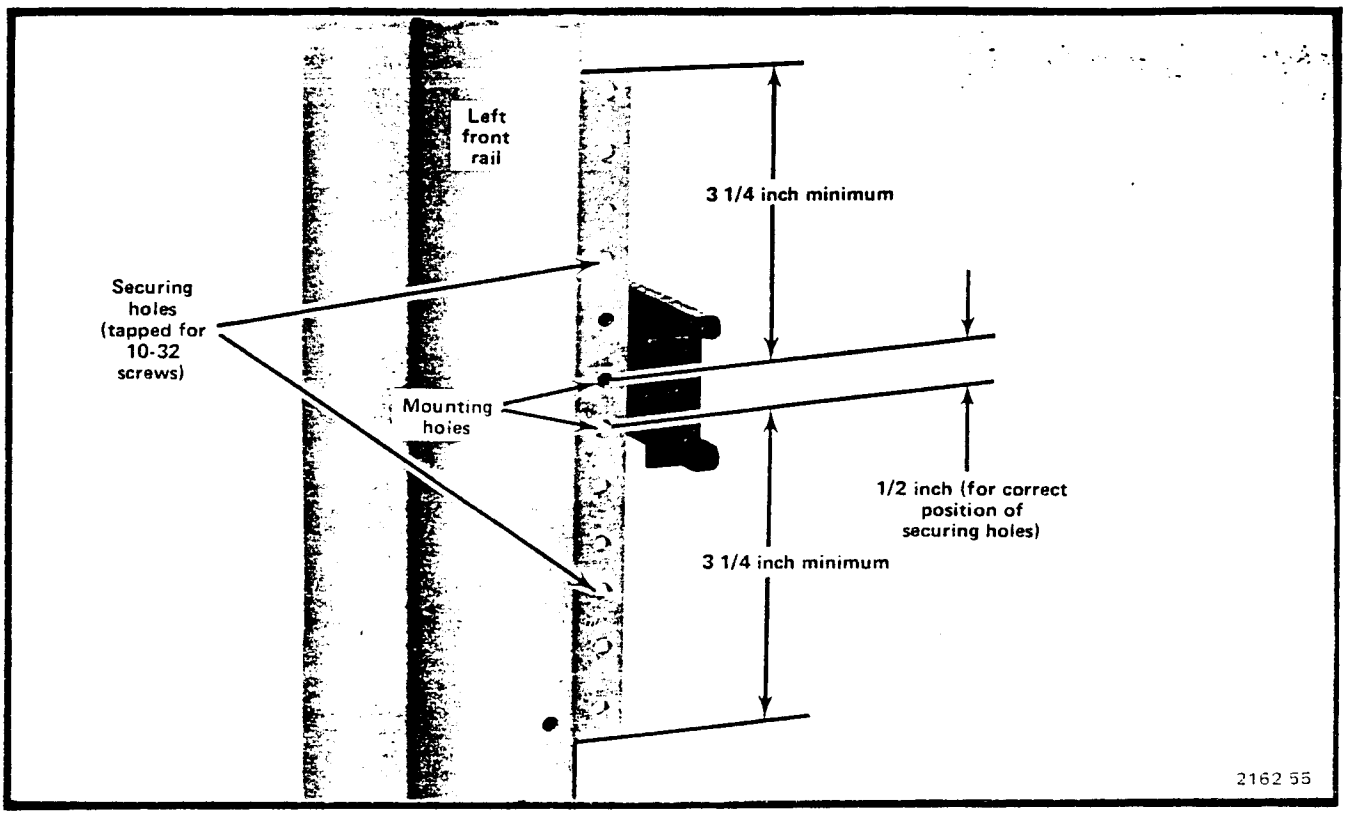


Figure 2-15. Locating the mounting holes for the left stationary section. Same dimensions apply to right stationary section.

2a. If the mounting flanges of the stationary sections are to be mounted in front of the front rails (rails tapped for 10-32 screws), mount each stationary section as shown in Figure 2-16(A).

2b. If the mounting flanges of the stationary sections are to be mounted behind the front rails (rails not tapped for 10-32 screws), mount each stationary section as shown in Figure 2-16(B).

3. Attach an angle bracket to both rear rails of the rack through the spacer block, stationary section and into the rear rail of the rack. Note that the holes in the spacer block are not centered. Be sure to mount the block with the narrow edge toward the front of the rack; otherwise, the instrument may not slide all the way into the rack. Do not tighten the mounting screws. Figure 2-12 shows the parts in the rear support kit and the order in which they are assembled.

4. Assemble the support pin to the angle bracket in the order shown in Figure 2-12. Leave the spacer (washer) off, but install the neoprene washer.

5. Install a support block on each side of the instrument as shown in Figure 2-13.

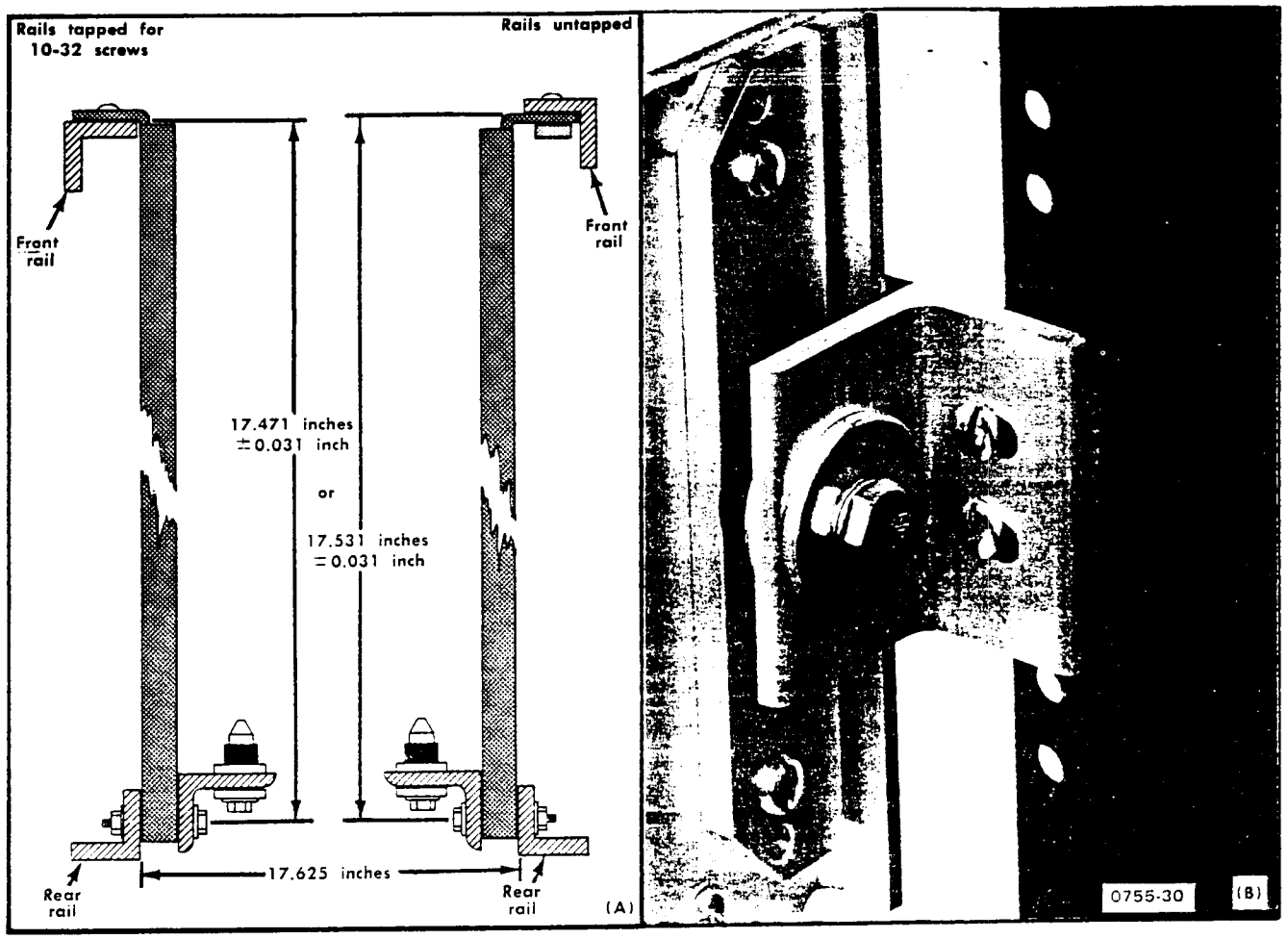


Figure 2-16. Supporting the rear stationary sections: (A) Dimensions necessary; (B) Completed installation.

6. Refer to Figure 2-17 to insert the instrument in the rack. Do not connect the power cord or install the securing screws until all adjustment have been made.

7. With the instruments pushed all the way into the rack, adjust the angle brackets so the neoprene washers on the support pins are seated firmly against the rear of the instrument and the support pins are correctly positioned in the support block on the rear of the instrument. Tighten all screws.

8. Pull the instrument partially out of the rack.

9. Remove the neoprene washers from the support pins and place the spacers on the pins. Replace the neoprene washers.

10. Position the instrument so the pivot screws (widest part of the instrument) are approximately even with the front rails.

**TO INSERT THE R465:**

1. Pull the intermediate section (A) of each slide-out track out to its fully extended position.
2. Insert the chassis section (B) (on instrument) into the intermediate sections.
3. Press both stop latches (C) and push the instrument into the rack until the latches snap into the stop latch holes (D).

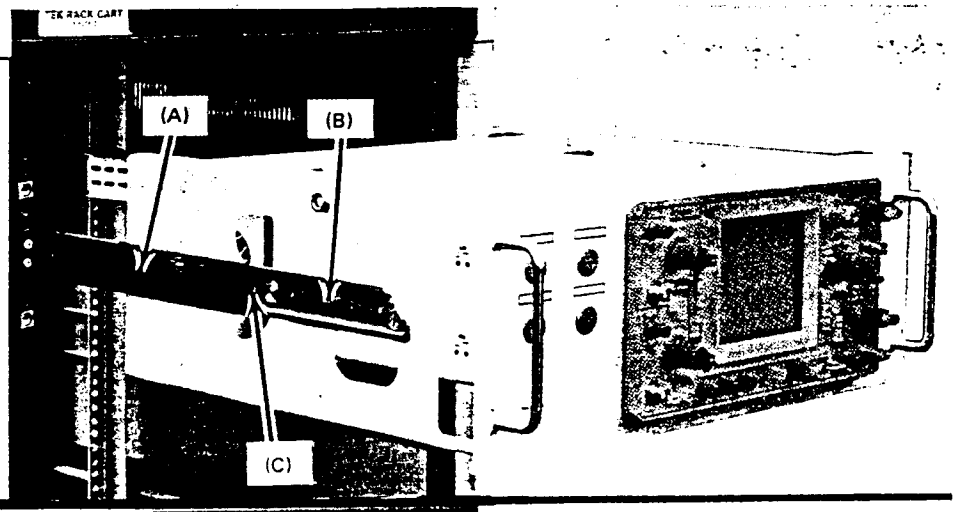


4. Connect the power cord to the power source.
5. Again press the stop latches (D) and push the instrument all the way into the rack.
6. To secure the R465 to the rack, insert the 4 securing screws (E), with finishing washers and teflon washers, through the slots in the instrument front panel and screw them into the front rails of the rack.

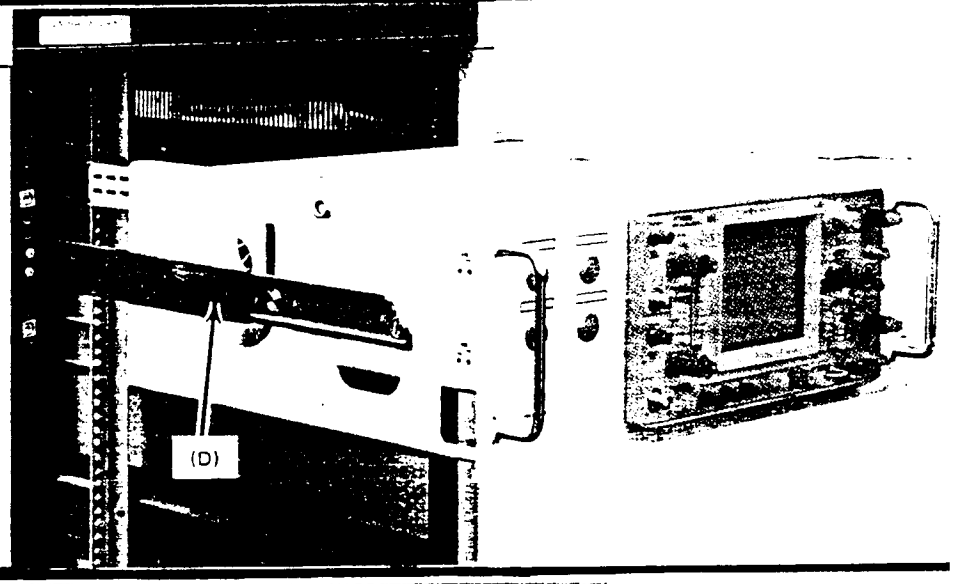


**TO REMOVE THE R465:**

1. Remove the securing screws and washers (E).
2. Pull the instrument outward until the stop latches snap into the stop latch holes.
3. Disconnect the power cord.
4. Press both stop latches (D) and pull the instrument out of the rack.

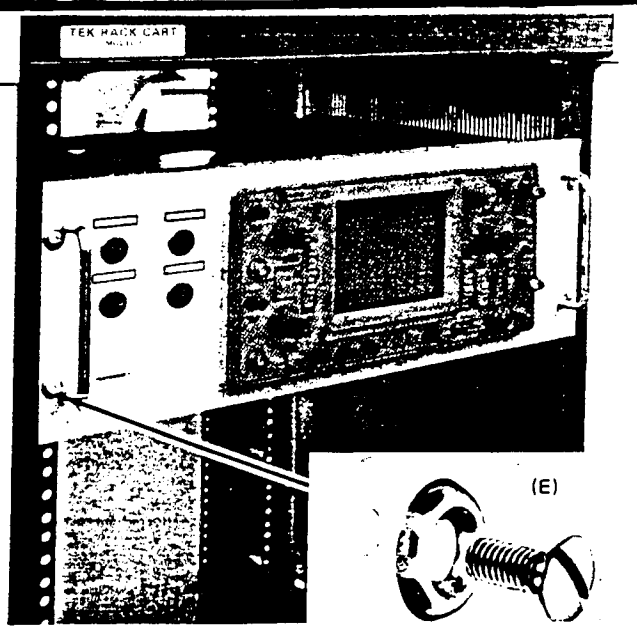


1861-32

Figure 2-17. Procedure for inserting or removing the instrument after the slide-out tracks have been installed.

11. Adjust the alignment of the stationary sections according to the procedure outlined in Figure 2-18. (If the rear alignment is changed, recheck the rear support pins for correct alignment.)

12. After the tracks operate smoothly, connect the power cord to the power source.

13. Push the instrument all the way into the rack and secure it to the rack with the securing screws and washers as shown in Figure 2-17.

*NOTE*

*The securing screws are an important part of the shock-mounted installation. If the front rails are not tapped for the 10-32 securing screws, other means must be provided for securing the instrument to the rack.*

## ALTERNATIVE REAR MOUNTING METHODS

**CAUTION**

*Although the following methods provide satisfactory mounting under normal conditions, they do not provide solid support at the rear of the instrument. If the instrument is subjected to severe shock or vibration when mounted using the following methods, it may be damaged.*

An alternative method of supporting the rear of the instrument is shown in Figure 2-19. The rear support brackets supplied with the instrument allow it to be mounted in a rack which has a spacing between the front and rear rails of 11 to 24 inches. Figure 2-19(A) illustrates the mounting method if the rear rails are tapped for 10-32 screws, and Figure 2-19(B) illustrates the mounting method if the rear rails are not tapped for 10-32 screws. The rear support kit is not used for this installation.

If the rack does not have a rear rail, or if the distance between the front and rear rails is too large, the instrument may be mounted without the use of the slide-out tracks. Fasten the instrument to the front rails of the rack with the securing screws and washers. This mounting method should be used only if the instrument will not be subjected to shock or vibration and if it is installed in a stationary location.

## REMOVING OR INSTALLING THE INSTRUMENT

After initial installation and adjustment of the slide-out tracks, the R465B can be removed or installed by following the instructions given in Figure 2-17. No further adjustments are required under normal conditions.

## SLIDE-OUT TRACK LUBRICATION

The slide-out tracks normally require no lubrication. The special finish on the sliding surfaces provides permanent lubrication. However, if the tracks do not slide smoothly even after proper adjustment, a thin coating of paraffin rubbed onto the sliding surfaces may improve operation.

**TO ADJUST ALIGNMENT:**

1. **Position the instrument with the pivot screws approximately even with the front rails.**
2. **Loosen the mounting screws at the front of both stationary sections (left side shown).**
3. **Allow the tracks to seek their normal positions with the instrument centered in the rack.**
4. **Tighten the mounting screws.**
5. **Push the instrument all the way into the rack. If tracks do not slide smoothly, check for correct spacing between the rear supports.**
6. **Check the vertical positioning of the R465 front panel with respect to adjacent instruments or panels. If not correct, reposition as necessary.**

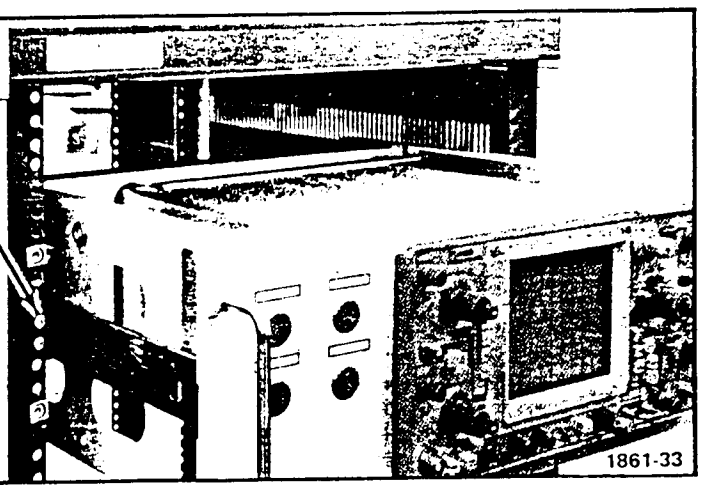


Figure 2-18. Alignment adjustment for correct operation.



@

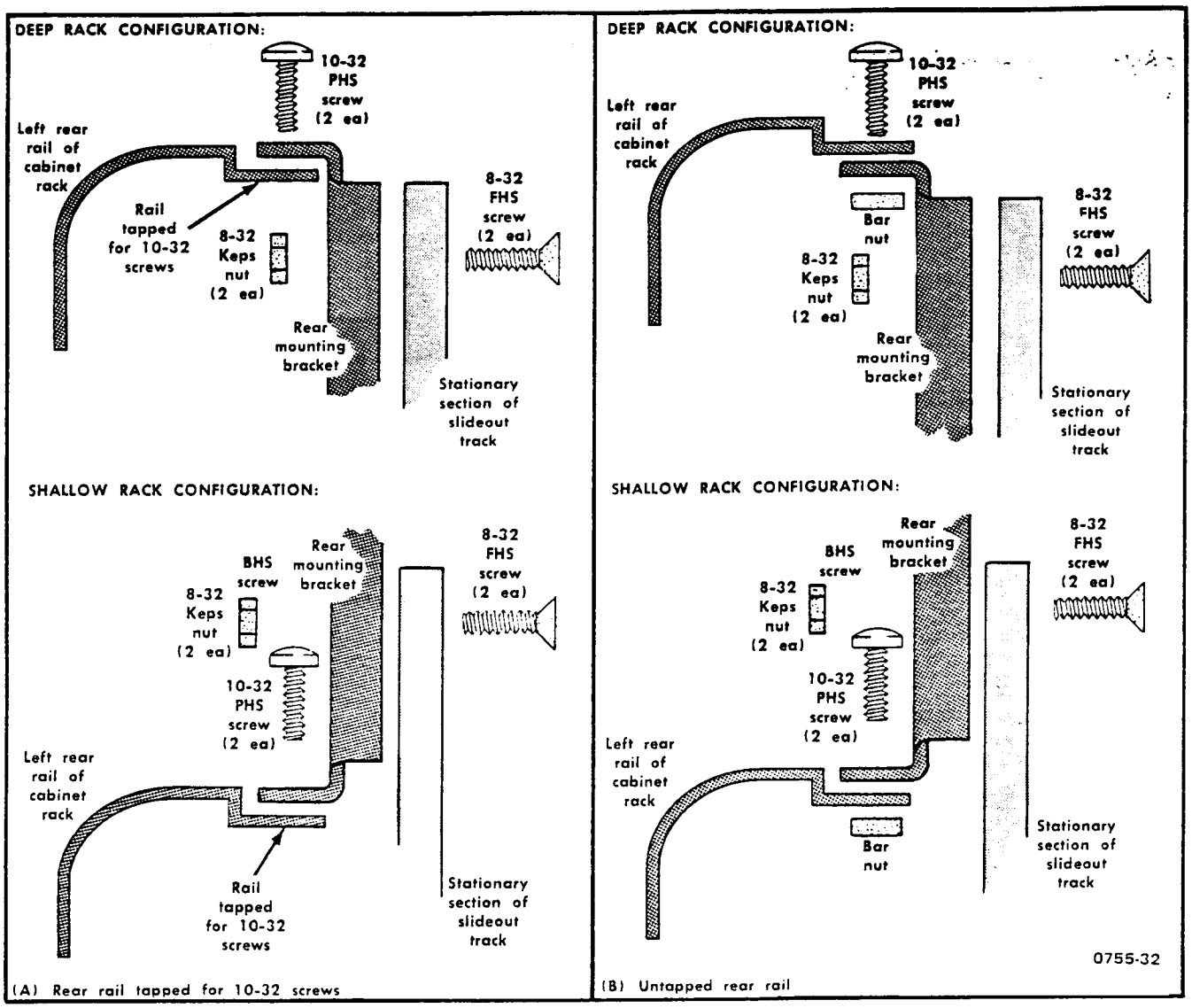


Figure 2-19. Alternative method of installing the instrument using rear support brackets.

For Service Manuals Contact
MAURITRON TECHNICAL SERVICES
8 Cherry Tree Rd, Chinnor
Oxon OX9 4QY
Tel:- 01844-351694 Fax:- 01844-352554
Email:- enquiries@mauritron.co.uk



@

# THEORY OF OPERATION

## INTRODUCTION

### SECTION ORGANIZATION

This section of the manual contains a functional description of the circuitry used in the 465B Oscilloscope. It begins with a general summary of the instrument, using the basic block diagram shown in Figure 3-1. As an additional reference, a comprehensive overall block diagram is provided in the tabbed Diagrams section at the back of this manual.

Each major circuit is explained in detail, using additional functional block diagrams to show the interconnections between parts comprising the circuit, to indicate circuit components, and to identify interrelationships with front panel controls. Schematic diagrams also are provided in the Diagrams section of the manual and are keyed to their respective circuit descriptions by numbered diamond symbols. For optimum understanding of the circuit being described, you should refer to both the appropriate schematic diagram and functional block diagram.

### INTEGRATED CIRCUIT DESCRIPTIONS

#### Digital Logic Conventions

Digital logic techniques are used to perform many functions within this instrument. Function and operation of the logic circuits are represented by logic symbology

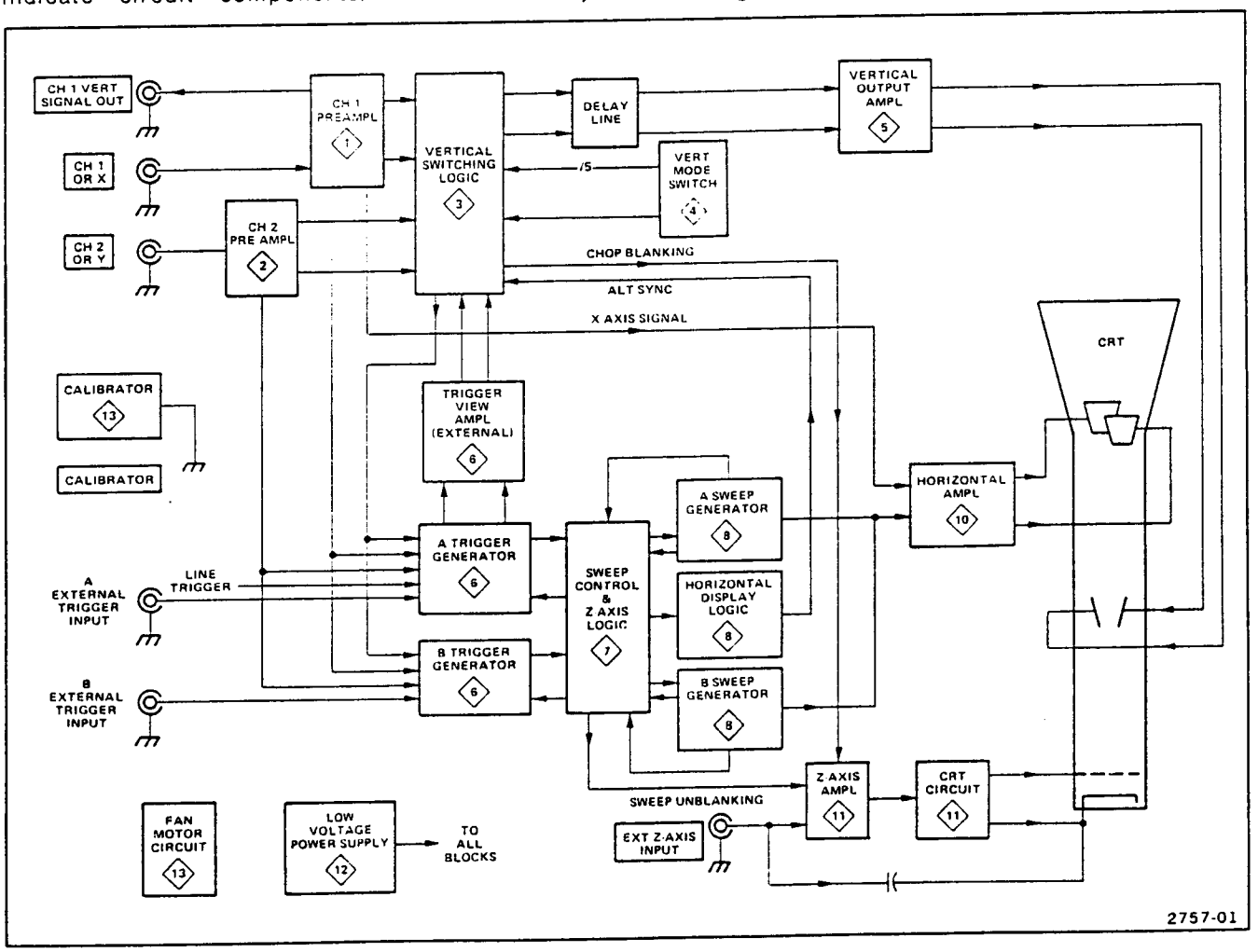


Figure 3-1. Basic block diagram of the 465B Oscilloscope.

and terminology. All logic functions are described using the positive logic convention. Positive logic is a system of notation whereby the more positive of two levels is the true, or 1 state; the more negative level is the false, or 0 state. In the logic description the true state is referred to as HI, and the false state is referred to as LO. The specific voltages which constitute a HI or a LO state vary between specific devices.

### Linear Devices

The functioning of individual linear integrated circuit devices is described in this section using waveforms or other techniques to illustrate their operation.

## GENERAL DESCRIPTION

The following discussion provides an overall functional description of the 465B Oscilloscope. Refer to the basic block diagram, Figure 3-1, and to the detailed block diagram located in the Diagrams section of this manual. Each major block in these diagrams represent a major circuit within the instrument. The numbered diamond symbol on each block refers to the appropriate schematic diagram also located in the Diagrams section.

Signals to be displayed on the crt are applied to the CH 1 OR X input connector or the CH 2 OR Y input connector. These input signals then are amplified by the Preamplifiers. Each channel includes separate vertical deflection factor, input coupling, balance, gain, and variable attenuation switches or controls. A trigger pickoff stage in each Vertical Preamplifier supplies a sample of that channel's signal to the Trigger Generator circuit. A sample of the Channel 1 signal is also supplied to the CH 1 VERT SIGNAL OUT connector on the instrument rear panel.

In the X-Y mode of operation the Channel 1 signal is connected to the input of the Horizontal Amplifier circuit to provide the X-axis deflection. The Channel 2 signal is amplified by the Vertical Output Amplifier circuit to provide the Y-Axis deflection. The Channel 2 Vertical Preamplifier circuit contains an invert feature to allow the operator to invert the Channel 2 signal displayed on the crt.

The outputs of both Vertical Preamplifier circuits and the output of the A Trigger View Amplifier circuit are connected to the Vertical Switching circuit. The Vertical Mode Switch circuit uses the inputs from the VERT MODE switches and the X-Y position of the A TIME/DIV switch to set the Vertical Switching circuit into the chosen Vertical Mode of operation. The Vertical Switching circuit then will select the input(s) to be displayed on the crt.

The Chopped Blanking signal, used to blank the switching transients between channels when the chopped mode of operation is selected, is produced in the Vertical Switching circuit and fed to the Z-Axis Amplifier circuit. A Normal Trigger pickoff stage at the output of the Vertical Switching circuit provides a sample of the displayed signal(s) to the Trigger Generator circuits.

The output of the Vertical Switching circuit is connected to the Vertical Output Amplifier through the Delay Line. The Vertical Output Amplifier circuit provides final amplification of the signal before it is connected to the vertical deflection plates of the crt. This circuit includes part of the BEAM FINDER switch, which, when activiated, limits vertical deflection to within the graticule area so that location of off-screen displays is facilitated.

The A and B Trigger Generator circuits each create an output pulse which initiates the sweep produced by either the A or B Sweep Generator circuits. The input signal to the A and B Trigger Generator circuits can be individually selected from any of the following sources: Channel 1 signal, Channel 2 signal, signal(s) displayed on the crt (Normal), signal(s) connected to the External Trigger Input connectors, or a line voltage sample (A Trigger only). Each trigger circuit contains level, slope, coupling, and source controls. The A External Trigger input is also fed to the A Trigger View Amplifier where it is amplified and made available to the Vertical Switching circuit for selection to be viewed on the crt.

The A Sweep Generator circuit, when activated by the A Trigger Generator circuit, produces a linear sawtooth output signal, the slope of which is controlled by the A TIME/DIV switch. The TRIG MODE switches control the operating mode of the A Trigger Generator circuit. When AUTO is selected, the absence of an adequate trigger signal for about 100 milliseconds after the end of holdoff causes an A Sweep start gate to be generated. When NORM is selected, a horizontal sweep is presented only when triggered by an adequate trigger signal. Pushing the SINGL SWP push button sets the Sweep Logic to initiate one sweep after a trigger pulse is received.

The Z-Axis logic circuit produces a gate signal to unblank the crt so that the display can be presented. This gate signal is coincident with the sawtooth produced by

the A Sweep Generator circuit. The A gate signal, which is also coincident with the sawtooth, is available at the A +GATE connector on the instrument rear panel. The Sweep Control Logic circuit also produces a Horizontal Alternate Sync pulse. This pulse is fed to the Horizontal Display Logic circuit to switch the display between A Intensified and B Delayed sweeps when the ALT Horizontal Display mode is selected.

The B Sweep Generator circuit is basically the same as the A Sweep Generator circuit. However, this circuit only produces a sawtooth output signal when a delay time period, determined by the DELAY TIME POSITION dial has lapsed, or when a trigger pulse is received from the B Trigger Generator circuit. If the B TRIGGER SOURCE switch is set to the STARTS AFTER DELAY position, the B Sweep Generator begins to produce the sweep immediately following the selected delay time. If the SOURCE switch is in one of the remaining positions, the B Sweep Generator circuit does not produce a sweep until it receives a trigger pulse from the B Trigger Generator circuit.

The output of either the A or B Sweep Generator is amplified by the Horizontal Amplifier circuit to produce horizontal deflection for the crt, except when the A TIME/DIV switch is in the fully counterclockwise (X-Y) position. The Horizontal Amplifier circuit contains a X10 magnifier that may be selected to increase the sweep rate 10 times in any A or B TIME/DIV switch position. Other deflection signals may be connected to the Horizontal Amplifier by using the X-Y mode of operation. When the TIME/DIV switch is set to X-Y, the X signal is connected to the Horizontal Amplifier circuit through the Channel 1 Vertical Preamplifier circuit.

The Z-Axis Amplifier circuit determines the crt intensity and blanking. The Z-Axis Amplifier circuit sums the current inputs from the INTENSITY control, Vertical Switching circuit (chopped blanking), Z-Axis Logic circuit (unblanking), and the EXT Z-AXIS Input connector. The output level of the Z-Axis Amplifier circuit controls the trace intensity through the CRT circuit. The CRT circuit provides the voltages and contains the controls necessary for operation of the cathode-ray tube.

The Power Supply circuit provides the low voltage power necessary for operation of the 465B. Low voltage power is distributed to all circuits in the instrument.

The Calibrator circuit produces a square-wave output (with both accurate voltage and current amplitudes) that is useful for both checking the calibration of the instrument and compensating probes. The CALIBRATOR current loop provides an accurate current source for calibration of current-measuring probe systems.

# DETAILED DESCRIPTION

## CHANNEL 1 PREAMP ①

### Introduction

The Channel 1 Preamplifier circuit, shown in Figure 3-2, provides control of input coupling, vertical deflection factor, gain and dc balance. Input signals for vertical deflection on the crt are connected to the CH 1 OR X input connector. When the TIME/DIV switch is set to the X-Y mode, the input signal applied to the CH 1 OR X connector provides the horizontal (X-axis) deflection.

### Input Coupling

Signals applied to the input connector can be either ac-coupled or dc-coupled or, they can be internally disconnected from the input to the Vertical Input Amplifier stages. When Input Coupling switch S30A is set for dc coupling, the input signal is coupled directly to the Input Attenuator stage. When ac coupled, the input signal passes through capacitor C13012 which prevents the dc component of the input signal from passing to the

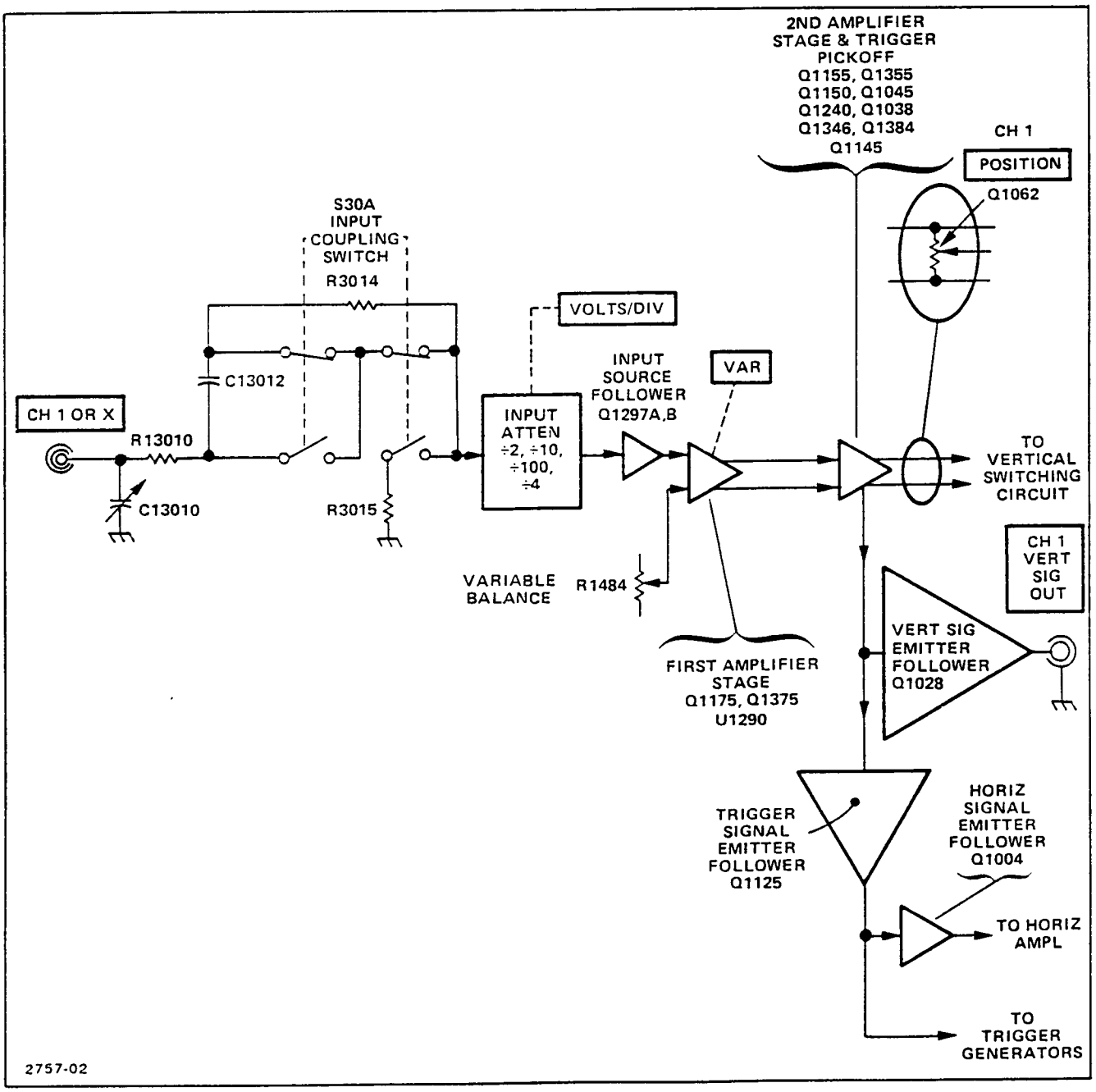


Figure 3-2. Detailed block diagram of the Channel 1 Preamplifier circuit.

amplifier. In the GND position of S30A, the signal path is opened and the input of the amplifier is connected to ground through R3015. This provides a ground reference without the need to disconnect the applied signal from the input connector. Resistor R3014 is a high resistance connected across Input Coupling switch S30A, which allows C13012 to be precharged when the switch is in the GND position. Therefore the trace remains within the viewing area of the crt when the switch is placed in the AC position.

### Input Attenuator

The effective overall deflection factor of each vertical channel of the 465B is determined by the setting of the Channel VOLTS/DIV switch. The basic deflection factor of the Vertical Deflection System is 5 millivolts/division of crt deflection. To achieve the deflection factor values marked on the front panel, precision attenuators are switched into the input to the Vertical Preamplifier circuit.

For VOLTS/DIV switch positions above 5 millivolts, frequency compensated-voltage dividers (attenuators) are switched into the circuit to produce the vertical deflection factors indicated on the front panel. Each channel has a 2X, 4X, 10X and 100X attenuator which may be selected in various combinations. A constant attenuation is provided at all frequencies within the bandwidth range of the instrument. The Input Attenuators are designed to maintain the same input characteristics (1 megohm and approximately 20 picofarads) for each setting of the VOLTS/DIV switch. Each attenuator contains an adjustable series capacitor to provide correct attenuation at high frequencies and an adjustable shunt capacitor to provide correct input capacitance.

*NOTE*

*Each attenuator is a hybrid encapsulated plug-in assembly; therefore, replacement of individual components within the attenuator is not possible. Should defects occur, the attenuator must be replaced as a unit.*

### Source Follower

The Channel 1 signal from the input attenuator is connected to Source Follower Q1297A through R3042, C3042, and R3045. Resistor R3039 provides the input resistance and resistor R3045 functions as a damping resistor. Q1297B is a constant current source for Q1297A. Q1297A and B provide a high input impedance for the attenuators and the current drive needed for the First Amplifier.

In the event that excessively high-amplitude signals are applied to Source Follower Q1297A, the signal will be limited by CR1298 and the gate-source junction of Q1297A. If the negative signal amplitude causes CR1298 to become forward biased, Q1297A gate is clamped to approximately −8.7 volts. Excessive positive signal amplitude will forward bias the gate-source junction of Q1297A. As soon as gate current flows, the gate voltage will cease increasing. Gate current is limited to a safe value by the high resistance of R3042.

### First Amplifier

The First Amplifier stage is an integrated emitter-coupled, push-pull, cascode amplifier U1290. The input signal on pins 13 and 16 is converted from a single-ended signal to a push-pull signal by a paraphase amplifier and then is fed to the common base output stage to produce the current drive to Q1175 and Q1375. The CH 1 VAR VOLTS/DIV control, which is connected to pin 11 of U1290, varies the gain of the First Cascode Amplifier stage. This control provides variable vertical deflection at each position of the VOLTS/DIV switch. With the VAR control in its calibrated detent (wiper at ground), the A and D output transistors of U1290 are conducting. The B and C output transistors are biased off. Thus, the signal current available to the following amplifier stage is the collector current flowing in output transistors A and D.

When the VAR control is rotated out of its calibrated detent, the B and C output transistors of U1290 begin to conduct by an amount determined by the position of the VAR control. This causes two events to occur:

1. The signal current flowing in the A and D output transistor is reduced by the amount of signal current flowing in the B and C output transistors.

2. Output transistors A and C and output transistors B and D conduct current of opposite polarity. The output of transistor C is added to the output of transistor A to reduce the signal current available at pins 5 and 6, and the output current of transistor B is added to the output current of transistor D to reduce the signal current available at pins 8 and 9.

The component values selected for the variable function provide a variable attenuation ratio of approximately 2.5 to 1. Channel 1 Variable Balance adjustment R1484 is adjusted so that no trace shift in the display occurs when rotating the VAR control. When the Channel 1 VAR control is out of its calibrated detent the Channel 1 UNCAL LED is illuminated. The components connected between pins 2 and 3 of U1290 provide frequency compensation for the stage.

Q1175 and Q1375 are common-base amplifiers that convert the output current signals from U1290 into voltage signals to be amplified in the Second Amplifier circuit. Gain adjust R1482 allows setting of the overall gain of the Channel 1 Vertical Preamplifier by adjusting the signal voltage to the bases of Q1155 and Q1355.

### Second Amplifier

Q1155 and Q1355, in conjunction with Q1344 and Q1346 in the Vertical Switching circuit, form a push-pull cascode amplifier. CR1263, CR1264, and RT1267 provide temperature compensation for the high-frequency gain amplifier to ensure constant gain in the presence of varying ambient temperature. As temperature increases, the resistance value of RT1267 decreases, and the reverse bias on both CR1263 and CR1264 decreases. CR1263 and CR1264 are voltage-variable capacitors whose capacitance increases as reverse bias decreases. The increase in capacity at higher temperatures provides additional high-frequency peaking to counteract the effects of increased temperature on the amplifier's gain.

The push-pull signals at the emitters of Q1155 and Q1355 are converted to a single-ended signal by Q1150, Q1250, Q1045, and Q1145. The current signal from Q1145 is converted to a voltage signal by common-base amplifier stage Q1038 and applied to the bases of Q1125 and Q1028. Q1028 provides the output signal to the CH 1 VERT SIGNAL OUT output connector located on the instrument rear panel. CR1014, CR1024, CR1023, and CR1013 protect the emitter circuit of Q1028 in the event large signal levels are accidentally connected to the CH 1 VERT SIGNAL OUT connector. The output signal at the emitter of Q1125 is used as the trigger signal source in the CH 1 positions of the Trigger SOURCE switches and as the signal source for emitter follower Q1004. R1126 adjusts the dc level of the CH 1 trigger source signal. When in the X-Y mode, Q1004 provides the X-axis signal from the Channel 1 Preamplifier to the Horizontal Amplifier.

R1055 is the Channel 1 Vertical POSITION control. When set to its mid-position, the constant current supplied by Q1062 flows equally through each side of R1055 into the collectors of Q1155 and Q1355. As the POSITION control is rotated off its mid-point, one side of the amplifier receives more current while the other side of the amplifier receives less current. This proportionally changes the amount of current flowing into the Delay Line Drivers, therefore causing the trace to be positioned vertically on the crt. The mid-range operating point of the POSITION control is set by adjusting R1135.

## CHANNEL 2 PREAMP ⟨2⟩

### Introduction

The Channel 2 Preamplifier circuit is virtually the same as the Channel 1 Preamplifier circuit. The only differences between the two circuits are described in this part. Input signals for vertical deflection on the crt are connected to the CH 2 OR Y input connector. When the TIME/DIV switch is set to the X-Y mode, the Channel 2 input signal provides the vertical (Y-axis) deflection.

### First Amplifier

Basically, the First Amplifier stage in Channel 2 operates the same as the First Amplifier stage in Channel 1. However, the Channel 2 circuit also contains the INVERT switching function. This allows the Channel 2 crt display to be inverted. When pushed in, the INVERT switch changes the biasing on the output transistors of U1790 so that the normally inactive transistors (B and C) now carry the signal. Since their outputs are cross-coupled from side to side, the output signal is of opposite polarity from the signal available when the INVERT switch is in the normal (button out) position. Channel 2 Invert Balance potentiometer R1975 allows the dc balance of the stage to be adjusted to eliminate baseline shift in the display when switching from a normal to an inverted display.

## VERTICAL SWITCHING LOGIC ⟨3⟩

### Introduction

The Vertical Switching Logic (Figure 3-3) determines the input signal or combination of input signals to be connected to the Vertical Output Amplifier. Possible input signal combinations that may be displayed are selected by a read-only memory (ROM) integrated circuit that is controlled by the VERT MODE switches and the X-Y position of the TIME/DIV switch.

### Diode Gates

The Channel 1, Channel 2, and Trigger View Diode Gates, consisting of four diodes each, act as switches that are controlled by the Vertical Switching Logic circuit. Outputs $Q_0$, $Q_1$, and $Q_2$ of U1705 (pins 2, 7, and 10) control the switching transistors that switch the Diode Gates on or off. These output signals also are fed into the $A_0$, $A_1$, and $A_2$ inputs of ROM U1605 (pins 5, 6, and 7), to indicate the state of the switches. (Refer to the Maintenance section of this manual for a Logic Table of the ROM functions.) A LO indicates that a particular switch is on, and a HI indicates it is off. The ROM is programmed to use the state indicators from U1705 and the selected VERT MODE inputs to U1605 $A_3$ through $A_7$ (pins 4, 3, 2, 1, and 15) to turn on the correct Diode Gates for obtaining the selected signal, or combination of signals, to be displayed.

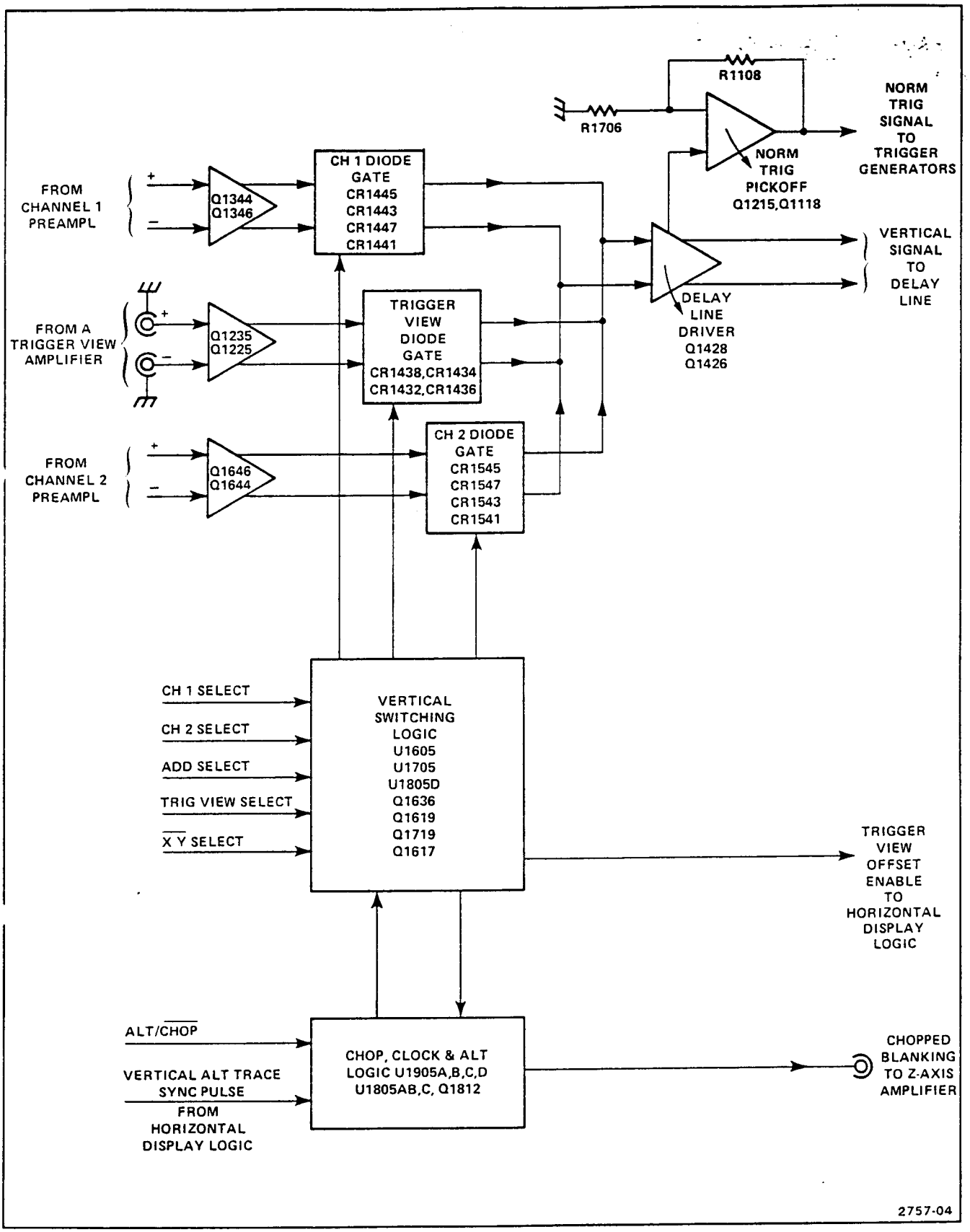


Figure 3-3. Detailed block diagram of the Vertical Switching Logic circuit.

**CHANNEL 1 DISPLAY ONLY.** When the CH 1 VERT MODE push button is pressed, a HI is applied to the $A_3$ input of U1605. The $A_4$, $A_5$, and $A_6$ inputs will be LO and the $A_7$ input (controlled by the X-Y position of the A TIME/DIV switch) will be HI. This combination of inputs is decoded to switch transistor Q1619 on, which turns on the Channel 1 Diode Gate. The $O_1$ output of U1605 will be LO, the $O_2$ and $O_3$ outputs will be HI. The $O_4$ output, which controls the CHOP oscillator, will be low. A LO will disable the CHOP clock and U1705 will remain in a state that allows the Diode Gates to pass only the Channel 1 input signal to the Delay Line Driver.

With Channel 1 only selected, the $Q_0$ output of U1705 will be LO. The LO will turn on transistor Q1619 and the junction of CR1447 and CR1443 will be returned to the +5-volt supply through R1625 and Q1619. This raises the junction voltage to reverse bias CR1447 and CR1443. Then CR1445 and CR1441 are forward biased and the Channel 1 input signal passes through CR1441 and CR1445 to the Delay-Line Driver.

CR1432 and CR1434 in the Trigger View Diode Gate and CR1547 and CR1543 in the Channel 2 Vertical Signal Diode Gate remain forward biased through the pull-down resistors to the −8 volt power supply. Trigger View signals and the Channel 2 input signals are shunted to the −8 volt supply and are blocked from the Delay Line Driver because CR1438 and CR1436 in the Trigger View Diode Gate and CR1545 and CR1541 in the Channel 2 Vertical Signal Diode Gate are reverse biased.

**CHANNEL 2 DISPLAY ONLY.** When CH 2 VERT MODE is selected, Q1719 turns on; Q1619 and Q1617 remain off. The center diodes of the Channel 1 Diode Gate and the center diodes of the Trigger View Diode Gate are forward biased, and the center diodes of the Channel 2 Diode Gate are reverse biased. Trigger view and Channel 1 signals are blocked from the Delay Line Driver, and the Channel 2 input signal is connected to the Delay Line Driver.

**A TRIGGER VIEW (EXT ONLY).** When A TRIG VIEW is selected, the Channel 1 and Channel 2 Diode Gates are biased off, and the Trigger View Diode Gate is biased on to allow the External Trigger signal to be connected to the Delay Line Driver. In all single input selections (CH 1 only, CH 2 only, or A TRIG VIEW only) the clock is disabled and U1705 remains in a state to select only the single input chosen to be displayed.

**ADD VERTICAL MODE.** U1605 is programmed to turn on transistor Q1619 (CH 1) and Q1719 (CH 2). The logic from U1705 will turn on Q1636 (ADD) at the same time, if ADD VERT MODE is selected. It is not necessary to select Channel 1 or Channel 2 to obtain the ADD display. With ADD selected, the $Q_0$ and $Q_1$ outputs of U1705 will be LO, and the $Q_0$ and $Q_1$ outputs will be HI. This will cause both Channel 1 and Channel 2 Diode Gates to be on. With $\overline{Q_0}$ and $\overline{Q_1}$ HI, U1805D will be enabled to turn on Q1636. The junction of R1532 and R1534 will have −8 volts applied to provide sufficient additional current to keep both Diode Gates turned on without altering the dc levels associated with the Delay Line Driver. By selecting additional VERT MODEs, it is possible to view the Channel 1 input, the Channel 2 input, the A External Trigger input, and ADD MODE on the crt during one display cycle on four separate traces.

**X-Y MODE.** When the A TIME/DIV switch is set to X-Y, a LO is applied to pin 15 of U1605. The ROM is programmed to produce outputs that turn on Channel 2 switching transistor Q1719 and disable the CHOP clock. This action causes the Channel 2 input to be connected to the Delay Line Driver for the Y-axis signal. It is not necessary to select Channel 2 VERT MODE, since the ROM will not respond to any other input while the X-Y mode is selected.

## Chop Clock and Alternate Logic

U1905B, U1805A, R1904, R1903, and C1804 make up the Chop Clock Oscillator circuit. When the $O_4$ output of U1605 is HI and the CHOP MODE is selected, a HI is present on pin 5 of U1905B. U1805A will alternately put a HI and then a LO on pin 4 of U1905B. Assume an initial LO on pin 4 of U1905B. U1905B is a NAND gate, so its output will be HI. C1804 charges toward a HI and as soon as its charge reaches the threshold level of U1805A, U1805A will switch to a HI output. The HI output of U1805A pin 3 will assert a HI on U1905B pin 4. This HI is NANDed with the HI already present on pin 5 of U1905B to produce a LO at pin 6 of U1905B. Now C1804 has to discharge toward a LO. As soon as the charge on C1804 reaches the LO threshold of U1805B, U1805B will switch to a LO output and the cycle will repeat. The Chop Clock oscillator frequency is approximately 1 megahertz and depends on the RC-time constant of R1903 and C1804, as well as the threshold level of U1805A (see Figure 3-4).

When CHOP is selected, pin 2 of U1905A will be LO. Pin 3 of U1905A will be HI which enables U1805C to pass the CHOP clock oscillator frequency to pin 9 of U1705. U1705 changes state for every positive transition of the clock

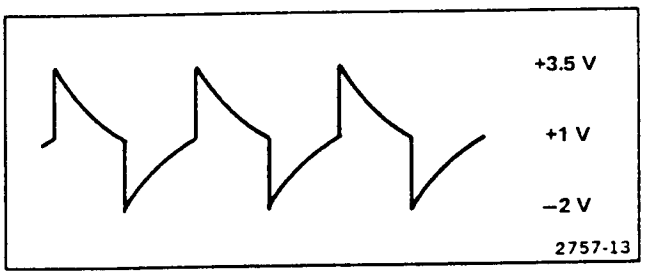


**Figure 3-4. Switching waveform at the junction of R1903 and R1904.**

oscillator (once each cycle) effectively performing a divide-by-two. Therefore, the CHOP frequency is approximately 500 kilohertz. The CHOP clock oscillator will not be enabled unless more than one input is selected. As stated previously, a single-input VERT MODE selection will cause U1705 to remain in a state that will allow only the selected input to be passed on to the Delay Line Driver.

If multiple inputs are selected for display, U1705 will be clocked to select the appropriate inputs programmed for display. Transistors Q1619, Q1719, Q1617, and Q1636 (if ADD is selected) are being switched at the Chop clock frequency (CHOP Mode). As the displays are being incremented, the $Q_0$, $Q_1$, and $Q_2$ outputs of U1705 are being used as state indicators to the $A_0$, $A_1$, and $A_2$ inputs of ROM U1605 to indicate the next input to be selected for display. The order of priority of the switching is: CH 1, CH 2, ADD, then TRIG VIEW.

**ALTERNATE TRACE SYNC.** With ALT Vertical Mode selected, a HI will be present at U1905D pin 12. If more than a single-input display is selected, a HI will also be present at pin 13. The CHOP clock will then be disabled. U1905A will be enabled to pass the Alternate Trace Sync pulse to U1805C pin 9, and U1805C will be enabled to pass the pulse to U1705 pin 9 (clock input). U1705 will now be switching between selected inputs at a rate determined by the Alternate Trace Sync pulse from the Horizontal Display Logic circuit.

If a single input is selected for display, U1805B pin 5 will be LO and the Chop clock will remain disabled. The Alternate Trace Sync pulse will be present at U1705 pin 9, but with only one input selected by the VERT MODE switches, U1705 will not change state and the switching transistor for the selected input to be displayed will remain on.

When Alternate Horizontal Display is chosen, the Alternate Trace Sync input becomes a square wave with a period equal to twice the time between Alternate Trace Sync pulses. This will allow the display of the A sweep and the B sweep before switching to the next vertical input signal to be displayed (see Figure 3-5).

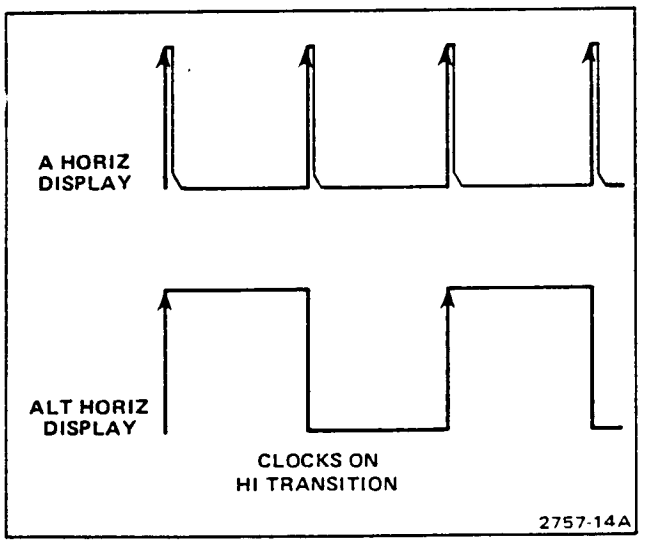


**Figure 3-5. Vertical Alt Sync Pulse at U1705 pin 9.**

### Chopped Blanking Amplifier

When CHOP Mode is selected, a LO on U1905D pin 12 holds U1905D pin 11 HI. This HI enables U1905C to pass the Chop pulse to C1813. C1813 and R1916 differentiate the Chop pulse to produce positive and negative spikes having sufficiently fast rise times necessary for the Chopped Blanking. CR1918 limits the positive spike and R1815 limits the base current of Q1812. The positive portion of the waveform reverse biases Q1812, but when the waveform switches from the positive portion to the negative portion, Q1812 is driven rapidly into conduction. The blanking time is determined by the charging time of C1813 through R1916 and R1815. The positive-going output pulse, which is coincident with trace switching, is connected to the Z-Axis Amplifier circuit through R1914.

### Delay-Line Driver

The output from the Diode Gates is applied to the Delay Line Driver composed of Q1426 and Q1428. Transistors Q1426 and Q1428 are connected as feedback amplifiers, with R1328 and R1522 providing feedback from the collector to the base of their respective transistors. A sample of the signal in the collector circuit of R1426 is used for triggering in the Normal mode of trigger operation. Bandwidth Limit switch S1414 connects a pi filter (composed of C1306, C1405, L1412, and L1512) between the output signal lines of the Delay Line Driver to reduce the upper −3 decibel bandwidth limit of the Vertical Amplifier system to approximately 20 megahertz. Resistors R1314 and R1514 provide reverse termination for any reflections in the delay line.

### Normal Trigger Pickoff Amplifier

The trigger signal for Normal trigger operation is obtained from the collector of Q1426. Normal Trigger DC Balance Adjustment R1202 sets the dc level of the normal trigger output signal such that the sweep is triggered at the zero level of the displayed signal whenever the trigger LEVEL control is set to zero. Q1215 and Q1118 are connected as a feedback amplifier, with the signal applied to the base of Q1215 and the feedback connected between the output and emitter of Q1215 through R1108.

## VERTICAL MODE SWITCH ④

### Introduction

The Vertical Mode Switch circuit produces the logic necessary for placing the Vertical Switching Logic circuit into the correct state for the Vertical Mode selected. The Scale-Factor Switching circuit selects the correct scale-factor LED to be illuminated with each Vertical Mode selection.

### Exclusive-NOR Switching Circuit

The Exclusive-NOR Switching circuits produce a LO pulse on the ALT/$\overline{\text{CHOP}}$ select line whenever a VERT MODE push button is either pressed or released. While the ALT Vertical Mode is selected, the LO pulse will enable the Chop oscillator, momentarily producing clock pulses which enable the Vertical Switching Logic circuit to select the correct Vertical Mode for the next display.

Assume that the CH 1 VERT MODE push button has been pressed. The condition of Exclusive-NOR circuit U5235D is as follows: A HI is on pins 12 and 13 of U5235D, and a HI is present at output pin 11; C5135 has charged to a HI level through R5135. When the push button is released, a LO is immediately applied to pin 12, but C5135 is still charged to a HI level, so the HI remains on pin 13. These input conditions to the Exclusive-NOR circuit will produce a LO at output pin 11 to enable the Chop oscillator. Then C5135 discharges toward a LO level through R5135, and when the LO threshold voltage is reached, both inputs to the Exclusive-NOR circuit will be LO. The output of U5235D will switch back to HI, turning off the Chop oscillator.

When the X-Y Horizontal Display is selected, −8 volts is applied through R5212 to the $\overline{\text{XY}}$ select input of the Vertical Switching Logic circuit (placing it in the X-Y Mode of operation) and through the series combination of R5211 and R5214 to the ALT/$\overline{\text{CHOP}}$ select to enable the Chop oscillator if the Alternate Vertical Mode is selected.

### Scale-Factor Switching Circuit

The vertical deflection factor for each channel is indicated by back-lighting the appropriate figures imprinted on the flange of each VOLTS/DIV knob. Because the operation of the Channel 1 and Channel 2 Scale-Factor Switching circuits are similar, only the circuit action of the Channel 1 Scale-Factor Switching circuits is described.

When CH 1 or ADD Vertical Mode is selected, or when X-Y Horizontal Display Mode is selected, −8 volts is applied to the Q5017 base biasing voltage divider network composed of R5114 and R5015. The base of Q5017 will be biased negative, saturating Q5017. When Q5017 is saturated, the X10 and X1 scale-factor LED DS9040 and DS9060 will have a return path to ground through the transistor and are enabled. (10X LED or 1X LED is lighted depending on the type of probe or cable attached to the CH 1 OR X input connector.)

The X-Y position of A TIME/DIV switch S6111 puts −8 volts on both Channel 1 and Channel 2 scale-factor LED-enabling transistors Q5017 and Q5241 through blocking diodes CR5115 and CR5116. This allows the appropriate scale-factor LED to be illuminated on both CH 1 and CH 2 (10X or 1X).

With either a coaxial cable or 1X probe attached to the CH 1 OR X input connector, the probe-coding ring portion of the input connector is not contacted. Q5057 will be biased off by the −8 volts through R5055. A voltage divider network composed of R5053, R5041, R5042, and R5052 between Q5017 and the −8 volt supply will bias Q5056 into conduction; the 1X LED in series with Q5056 will be on. The 10X LED is in parallel with R5053, and the voltage drop across R5053 will not be sufficient to cause the 10X LED to light.

When a 10X probe equipped with a scale-factor-switching connector is attached to the CH 1 OR X input connector, the probe coding ring will be contacted. The base of Q5057 will now be connected to ground through R15102 and an internal resistor located within the probe connector body. A bias voltage divider is formed, biasing Q5057 into saturation. The collector of Q5057 will drop to about −7.2 volts. This voltage level is enough to light the 10X LED, and when it is applied to the Q5056 base bias voltage divider composed of R5042 and R5052, it is sufficient to bias Q5056 off and turn off the 1X LED.

## VERTICAL OUTPUT AMPLIFIER ⟨5⟩

### Introduction

The Vertical Output Amplifier circuit provides the final amplification for the vertical deflection signal. The circuit includes the Delay Line, part of the Beam Finder circuitry, and part of the Trace Separation circuitry. Pushing the BEAM FIND button compresses an overscanned display to within the viewing area. The Trace Separation circuit provides vertical positioning of the B trace when the ALT Horizontal Display mode is selected.

### Delay Line

Delay line DL11405 (Diagram 3) provides approximately 120 nanoseconds delay of the vertical signal to allow the Sweep Generator circuits sufficient time to initiate a sweep before the vertical signal reaches the deflection plates of the crt. When using internal triggering, the instrument is allowed to display the leading edge of the signal originating the trigger pulse. Resistors R2214 (R2206 below SN B030000) and R2218 (R2202 below SN B030000) provide forward termination for the Delay Line.

### Input Amplifier

The Input Amplifier consists of integrated circuit amplifier U2225 (U2210 below SN B030000) and the frequency compensation network connected across pins 2 and 3. Gain Adjust R2025 (R2005 below SN B030000) sets the gain of the amplifier. BEAM FIND switch S4075, when pressed, reduces the dynamic swing capabilities of the stage, thereby limiting the display to within the display area on the crt.

### Trace Separation

During B sweep the Trace Separation circuit (Q2115, Q2306, and Q2308) is enabled by the alternate pulse on

the base of Q2115. This switches Q2115 on and Q2105 off. This switching action allows the B trace to be vertically positioned independently of the A trace. Normally, Q2105 provides a constant amount of current to U2225; however, when in ALT mode, turning Q2115 on supplies current through Q2306 and Q2308. The TRACE SEP control supplies the variable voltage at the base of Q2308 and determines the position of the B sweep display relative to the A sweep display.

The current supplied to U2225 must remain constant so that the A sweep display positioning is not affected. U2005 senses the voltage at the base of Q2308 and compensates by raising or lowering the voltage at the base of Q2306. Potentiometer R2117 centers the B trace around the A trace so that the B trace moves equally above and below the A trace.

For instruments below SN B030000 transistors Q2140 and Q2130 receive a variable current from R14498 (Diagram 13), the TRACE SEP control. The Trace Separa-ion circuit is enabled during B sweep whenever the ALT Horizontal Display mode is selected. Q2140 and Q2130 supply an offset current to the signal current from U2210 during the B sweep. The offset current is not supplied during A sweep. The switching action allows the B sweep display to be vertically positioned independently from the A sweep display.

### Output Amplifier

Integrated circuit U2255 (U2260 below SN B030000) is a multi-stage cascode amplifier cell that provides the final amplification for the vertical signal. The input signal is applied push-pull between pins 1 and 5, and the output signal is taken from pins 9 and 12. Integrated circuit amplifier U2385 (U2480 below SN B030000) monitors the emitter currents of the output transistors and automatically sets the dc levels of the output stage to obtain the maximum undistorted gain from U2255 (U2260 below SN B030000).

## A AND B TRIGGER GENERATORS ⟨6⟩

### Introduction

The Trigger Generator circuits produce trigger pulses to start the Sweep Generator circuits. These trigger pulses are derived either from the internal trigger signal (sampled from the vertical deflection system), an external signal connected to the external trigger connectors, or a sample of the line voltage applied to the instrument. Controls are provided in each circuit to select trigger level, slope, coupling, and source.

An A Trigger View Amplifier is provided which amplifies the external A Trigger signal for application to the Trigger View Diode Gate where it may be selected for viewing. The trigger view display provides a method of making a quick and convenient check of the external trigger signal being used to trigger the A Sweep Generator. The external trigger input signal may be continually monitored by selecting the A TRIG VIEW Vertical Mode.

Since the A and B Trigger Generator circuits are virtually the same, only the A Trigger Generator circuit action and the differences between the A and B Trigger Generator circuits are described.

### Trigger Source

Trigger SOURCE switch S7312 selects the source of the trigger signal. The sources available to the A Trigger Generator circuit are the signal(s) being displayed (NORM), Channel 1 (CH 1), Channel 2 (CH 2), LINE, and EXT. The EXT/10 (A trigger circuit only) position attenuates the external trigger signal by a factor of 10. The B Trigger SOURCE switch does not have a LINE or an EXT/10 position, but has a STARTS AFTER DELAY position.

The STARTS AFTER DELAY position of the B Trigger SOURCE switch is used in conjunction with the DELAY TIME POSITION control. When STARTS AFTER DELAY is selected as a trigger source for the B Sweep, the B Sweep will begin to run immediately after the delay time selected by the DELAY TIME POSITION control has elapsed.

In the LINE mode of triggering, a sample of the power line frequency is obtained from the secondary of power transformer T14500 located in the Low Voltage Power Supply circuit. To prevent unwanted attenuation of the trigger signal by the LF REJ circuit, the A Trigger COUPLING switch should not be in LF REJ when using line voltage as a trigger source.

### Trigger Coupling

The Trigger COUPLING switches offer a means of accepting or rejecting certain components of the trigger signal. In the AC, LF REJ, and HF REJ mode of trigger coupling, the dc component of the trigger signal is blocked by coupling capacitors C7313 or C7317. Frequency components below 60 hertz are attenuated when using AC coupling, and components below about 50 kilohertz are attenuated when using LF REJ coupling. The higher frequency components of the trigger signal are passed without attenuation. In the HF REJ mode of trigger coupling, the high-frequency components of the trigger signal (above about 50 kilohertz) and low-frequency components (below 60 hertz) are attenuated, while the remaining frequency components are passed with minimal attenuation. The DC mode of trigger coupling passes all signals from dc to at least 100 megahertz without attenuation.

### Input Source Follower

Transistor Q7324A is a field-effect transistor (FET) source follower. It provides both a high input impedance for the trigger signal and isolation between the Trigger Generator circuit and the trigger signal source. Diode CR7322 provides input protection for Q7324A if an excessively high amplitude negative-going input signal is present. If a high-amplitude positive signal is applied, the source-gate junction of Q7324A becomes forward biased and clamps the voltage at that level. The second FET of the matched pair (Q7324B) is a high-impedance, constant-current source for Q7324A. Since both FETs are matched and mounted in the same heat sink, both will display equal temperature effects, and Q7324B will provide temperature compensation for Q7324A.

### Paraphase Amplifier

U7331 is a paraphase amplifier stage that converts the single-ended input from Source Follower Q7324A into a push-pull output applied to the Tunnel Diode Driver stage. Trigger Level Centering adjustment R7224 sets the level at pins 14 and 15 of U7331 so that the display is correctly triggered when the LEVEL control is centered. LEVEL control R17305 varies the level at pins 14 and 15 of U7331 to select the point on a trigger signal where triggering occurs.

The slope of the input signal that triggers the Sweep Generator circuit is determined by the setting of SLOPE switch S17305. When the SLOPE switch is set to the + position, the output signal present at pin 8 of U7331 is in phase with the input signal, and the output signal at pin 9 is inverted with respect to the input signal. When the SLOPE switch is set to the − position, the output signal at pin 8 is inverted with respect to the input signal, and the output signal at pin 9 is in phase with the input signal.

### Tunnel Diode Driver

Transistors Q7344 and Q7345 are common-emitter amplifier stages that provide signal currents necessary to switch the Trigger Firing tunnel diodes. CR7350 and CR7349 are approximately 4.7 milliamp tunnel diodes. [illegible] that will not allow CR7349 to be switched to its high-voltage state until CR7350 has been switched to its high-voltage state. At the end of the sweep time and during holdoff, a negative level is applied to the anode of CR7350, thereby resetting both CR7349 and CR7350 to their low voltages states. The reset level remains during holdoff time to ensure that a sweep gating signal will not be generated until the sweep circuit has returned to its quiescent state.

### Trigger View Amplifier

Transistors Q7424 and Q7422 make up half of a cascode, push-pull amplifier. In the Vertical Switching Logic circuit (Diagram 3), Q1235 and Q1225 form the rest of the Trigger View Amplifier. The Trigger View Amplifier requires that the A Trigger SOURCE switch be set to EXT or EXT/10 and the A TRIG VIEW Vertical Mode be selected before the amplifier is enabled to pass the external trigger signal to the Diode Gate and on to the Vertical Output Amplifier. If the trigger view display is selected, the Vertical Switching Logic circuit will turn on the Trigger View Diode Gate during the proper time to pass the signal on to the Delay Line Driver.

A sample of the push-pull external trigger signal is taken from pins 1 and 16 of U7331 and amplified by Q7424 and Q7422. The Trigger View Centering control (R7526) is used to vertically position the trigger view display. R7439 is adjusted to set the gain of the Trigger View Amplifier, and C7425, L7525, C7529, and R7423 provide HF compensation. Diodes VR7520, CR7521, and CR7536 are used to clamp the collectors of Q7424 and Q7422 to approximately +5.7 volts whenever Trigger View is disabled. Q1225 and Q1235 will be reverse biased during this time.

## SWEEP AND Z AXIS LOGIC CIRCUIT 7

### Introduction

The Sweep and Z-Axis Logic circuit, shown in Figure 3-6, develops the logic levels necessary to control the sequence of events associated with sweep generation and crt unblanking. The A and B +Gate signals are also generated in this circuit.

When the BEAM FIND push button is pressed, +15 volts is removed from the junction of R4167 and R4361, and −8 volts is applied to the junction through R4075. The following actions occur:

1. The base voltage of Q4269C and Q4269D is lowered to decrease the current through the two transistors. The reduced current flow decreases the voltage drop across R4266 and R4267 and the diode clamps (CR4266 and CR4267) clamp at a much lower voltage. This action limits the horizontal deflection on the crt; and

2. R4167 and R4361 are now no longer connected to +15 volts, therefore less current flows through these resistors. This compensates for the decreased current flowing through Q4269C and Q4269D and maintains the output stage in a linear operating region.

### Output Amplifier

The push-pull signal from the Gain Setting Cascode Amplifier is connected to the bases of Q4169 and Q4362, through R4265 and R4360 and on to the bases of Q4161 and Q4361. At lower sweep frequencies, the signal path is through R4265 and R4360 to the bases of Q4161 and Q4361. These transistors are inverting amplifiers whose collector signals drive the emitters of complementary amplifiers Q4146-Q4150 and Q4341-Q4343, respectively. Capacitor C4262 provides emitter peaking for fast ac signals. Capacitors C4150 and C4341 transfer part of the high-frequency signal to the emitters of Q4146 and Q4342 to maintain the gain of the output stage at high sweep speeds. Resistors R4244-R4250 and R4254-R4341 are the feedback elements, with C4246 and C4247 providing high-frequency compensation. As frequency of the sweep signal increases, the reactance of C4246 and C4247 decreases and feedback current increases. To compensate for the increase in drive required to maintain the gain of the output stage, Q4169 and Q4362 (fast-path amplifiers) increase signal current to the bases of Q4161 and Q4361. High-frequency signal current is shunted around R4265 by C4165 and R1165, and C4361 and R4363 shunt high-frequency signal current around R4369. The Output Amplifiers are limited from being over-driven by CR4267 and CR4266. If the output signal from U4269D or U4269C becomes too large, the diodes become forward biased and prevent further increase in the signal level. These diodes operate mainly to clamp the signal whenever the X10 Magnification circuitry is operating. The signal level is limited to the forward drop across the diodes plus the drop across R4266 and R4267.

## CRT CIRCUIT 11

### Introduction

The CRT circuit provides the voltage levels and control circuitry necessary for operation of the cathode-ray tube (crt). Figure 3-9 shows a detailed block diagram of the CRT circuit.

### High-Voltage Oscillator

The high-voltage oscillator is comprised of Q14009 and associated circuitry. It produces the drive for high-voltage transformer T4015. When the instrument is turned on, transistor Q4008 is forward biased and conducts through the base circuit of Q14009 to forward bias Q14009. The increasing collector current of Q14009, through the primary winding of T4015, induces a voltage across the feedback winding. Because the feedback winding is connected to the base of Q14009 and the feedback is positive, the collector current increases rapidly toward saturation. Soon the rate of increase slows to a point where the voltage induced in the feedback winding starts to decrease. This decreases the current through Q14009, further decreasing the feedback voltage. The cycle continues until Q14009 turns off, and the magnetic field around the primary winding of T4015 starts to collapse. Transistor Q14009 is held off until the field has collapsed sufficiently to allow the base of Q14009 to become biased into conduction and the cycle is repeated.

The voltage waveform at the collector of Q14009 is a sinusoidal wave at the resonant frequency of T4015. The amplitude of sustained oscillations depends on the average current delivered to the base of Q14009. Frequency of oscillation is approximately 50 kilohertz. Fuse F4508 protects the unregulated +15 volt supply in the event the High-Voltage Oscillator stage becomes shorted. C4006 and L4006 decouple the unregulated +15 volt supply to prevent current changes (present in the High-Voltage Oscillator) from affecting the +15 volt supply.

### High-Voltage Regulator

Once the output voltage from the High-Voltage Oscillator has reached its stable level after the instrument is turned on, regulation occurs as follows. A sample of the −2450 volt crt cathode supply is applied to the base of Q4228 through R4127D which, with the voltage supplied by the bias network composed of R4332, R4127C, C4327, and CR4329, sets the forward bias on Q4228. Any change in the −2450 volts changes the conduction level of Q4228 to produce a proportional dc change on its collector.

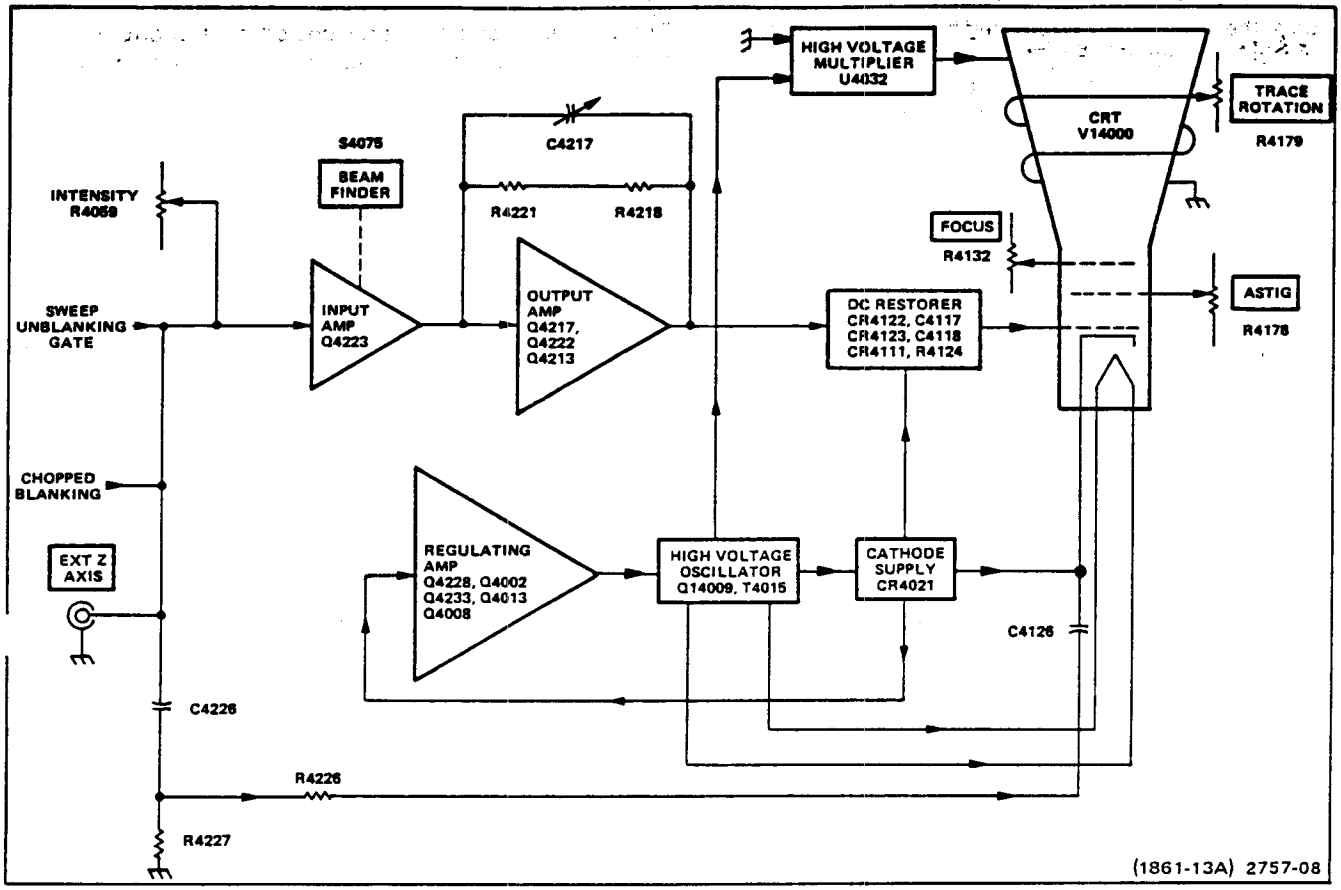


Figure 3-9. Detailed block diagram of the CRT and Z-Axis Amplifier circuits.

Assume that the −2450 volts supply starts to go positive (less negative). The positive-going change is applied to the base of Q4228 and causes the collector current to increase, which in turn, causes Q4233 and Q4008 to conduct harder. This results in greater bias current to the base of Q14009 through the feedback winding of T4015. Now Q14009 is biased closer to its conduction level, and it will conduct sooner in the oscillation cycle of T4015 to increase the average current delivered to the primary of 4015. This increases the amplitude of oscillation and induces a larger voltage into the high-voltage secondary of T4015 to correct the original positive-going change. By sampling the output of the crt cathode supply in this manner, the total output of the High-Voltage Supply is held relatively constant.

Overvoltage protection is provided by Q4002, Q4103, and associated circuitry. Normally Q4002 and Q4103 are biased off, but if the crt cathode supply voltage approaches approximately −3000 volts, the voltage level at the emitter of Q4008 will be approximately −6 volts. At this point Q4002 will be biased into conduction, which in turn biases Q4103 into conduction to reduce the forward bias on Q4008. This reduces the base drive to Q14009 in order to limit the amplitude of oscillations in T4015, and the crt cathode supply is prevented from going more negative than approximately −3000 volts.

## High-Voltage Rectifiers and Output

High-voltage transformer T4015 has two secondary windings. One winding provides heater voltage for the cathode-ray tube. The heater voltage is supplied from the High-Voltage Supply, since the cathode-ray tube has a very low heater current drain, and this allows the cathode and heater of the crt to be connected together to prevent cathode-to-heater breakdown. The high-voltage winding is the source for the negative crt cathode potential and the source for High-Voltage Multiplier U4032. The crt grid bias voltage is derived by a dc-restorer circuit that uses a sample of the signal in the high-voltage winding in conjunction with dc levels supplied by both the Z-Axis Amplifier and the crt negative cathode potential.

The positive accelerating potential is supplied by High-Voltage Multiplier U4032. Regulated output voltage is approximately +15,500 volts. The negative cathode potential of −2450 volts is supplied by half-wave rectifier CR4021. Voltage variations in this supply are monitored by the High-Voltage Regulator circuit to provide a regulated high-voltage output.

## CRT Control Circuits

Focus of the crt display is controlled by FOCUS control R4132. ASTIG adjustment R4178, which is used in conjunction with the FOCUS control to provide a well-defined display, varies the positive level on the astigmatism grid. Geometry adjustment R4069 varies the positive level on the horizontal deflection plate shields to control the overall geometry of the display.

Two adjustments control the trace alignment by varying the magnetic field around the crt. Y-Axis adjustment R4072 controls current through L14165, which affects the crt beam after vertical deflection but before horizontal deflection. Therefore, it affects only the vertical (Y) components of the display. TRACE ROTATION adjustment R4179 controls the current through L14176 and affects both vertical and horizontal rotation of the beam.

## Z-Axis Amplifier

The Z-Axis Amplifier circuit controls the crt intensity level from several inputs. The effect of these input signals is to either increase or decrease the trace intensity, or to completely blank portions of the display. Input transistor Q4223 is a current-driven, low input impedance amplifier. It provides termination for the input signals as well as isolation between the input signals and the following stages. Current signals from the various control sources are connected to the emitter of Q4223, and the algebraic sum of these signals determines the collector conduction level.

Transistors Q4222, Q4217, and Q4213 are configured in a feedback amplifier arrangement with R4218 and R4221 as feedback elements and with C4217 providing high-frequency compensation. Emitter follower Q4222 provides the drive to complementary amplifier Q4217-Q4213. Diodes CR4321, CR4218, and CR4115 provide protection in the event of high-voltage arcing.

The Z-axis portion of the Beam Find circuit acts on the input to the Z-Axis Amplifier. When the BEAM FIND push button is pressed, two events occur: First, +15 volts is applied to the anode of CR4144 which lifts the emitter of Q4223 sufficiently positive to ensure nonconduction of the transistor. Second, R4321 becomes connected to −8 volts through R4314 to establish a fixed and predetermined unblanking level at the output of the amplifier. Thus, the INTENSITY control and all of the input unblanking signals have no control over the intensity level of the crt display whenever the BEAM FIND push button is pressed, and a bright trace will be displayed.

## DC Restorer

The DC Restorer circuit provides crt control grid bias and couples both dc and low frequency components of the Z-Axis Amplifier unblanking signal to the crt control grid. This circuit allows the Z-Axis Amplifier output to control the intensity of the crt display. The potential difference between the Z-Axis Amplifier output and the control grid (about 2465 volts) prevents direct signal coupling.

The DC Restorer circuit's ac drive is taken from the center tap of T4015. Voltage on the center tap is approximately 300 volts p-p at 50 kilohertz. A sample of this sinusoidal voltage is fed through C4010 and R4112 to the junction of CR4111, CR4112, and R4111. The Crt Bias Adjust (R4109) sets the voltage level on the cathode of CR4111 to approximately +100 volts dc. When the ac sample voltage rises to +100 volts, CR4111 becomes forward biased and clamps the junction of CR4111 and CR4112 to approximately +100 volts.

The Z-Axis Amplifier output voltage level is applied via R4113 to the anode of CR4112. This voltage level varies between +15 volts and +95 volts, depending on the setting of the INTENSITY control. The sample voltage will hold CR4112 reverse biased until the voltage falls below the Z-Axis Amplifier output level. At that point CR4112 becomes forward biased and clamps the junction of CR4111 and CR4112 to the Z-Axis Amplifier output level (see Figure 3-10). Clamping the sample between +100 volts and the positive voltage level set by the INTENSITY control produces an approximate square-wave signal with a positive dc offset level.

The DC Restorer circuit is referenced to the −2450 volts, present on the crt cathode, through R4126 and CR4123 to the junction of C4117 and CR4122. Initially, C4117 will charge to a level determined by the difference between the Z-Axis Amplifier output level and the −2450 volt reference voltage. The charging path is from the −2450 volt line, through R4126, CR4123, C4117, R4111, CR4112, and R4113 to the Z-Axis output.

Initially, C4118 will also be charged to approximately the same voltage as C4117 through R4126, CR4123, and CR4122 to the Z-Axis output.

When the sinusoidal sample voltage starts its positive transition from the lower clamped level (+15 to +95 volts) toward the higher clamped level (+100 volts), the charge on C4117 increases due to the rising voltage at the anode of CR4111. The additional charge acquired by C4117 is proportional to the amplitude of the positive transition of the clamped sample voltage.

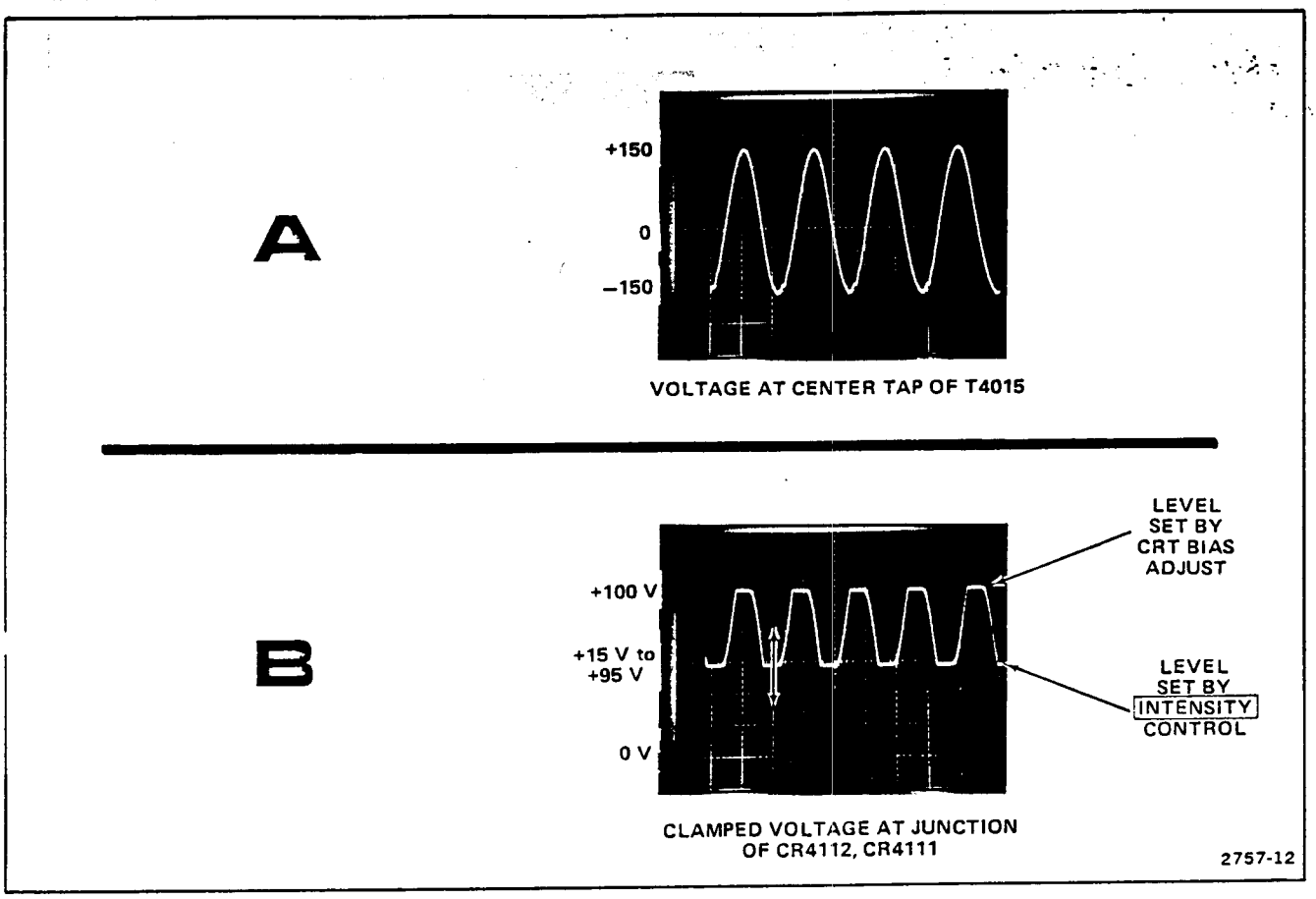


**Figure 3-10. (A) Sinusoidal sample voltage at center tap of T4015. (B) Clamped sample voltage at the junction of CR4111 and CR4112.**

When the sample voltage starts its negative transition from its upper clamped level toward its lower clamped level, the negative transition is coupled through C4117 to reverse bias CR4123 and forward bias CR4122. When CR4122 becomes forward biased, the charge on C4117 is transferred to C4118 as C4117 attempts to discharge to the Z-Axis output. The amount of charge that is transferred is proportional to the setting of the INTENSITY control, since the INTENSITY control sets the lower clamping level of the sample voltage from T4015 (see Figure 3-11).

If the INTENSITY control is set so the lower level of the sample voltage is clamped at +15 volts, a voltage change of approximately 75 volts is coupled through CR4122. The 75-volt negative excursion is added to the charge already present on C4118. This causes the control grid to be sufficiently negative with respect to the crt cathode to keep the crt blanked. When the INTENSITY control is set to increase the display intensity, the lower clamping level of the sample voltage is moved toward the +100 volt upper clamping level. This makes the swing of the negative transitions less, therefore less charge will be added to C4118. The voltage on the crt control grid becomes less negative with respect to the cathode and allows more beam current to flow in the crt. The more positive the lower clamping level is made, the brighter the trace on the crt.

During periods that C4117 is charging, the voltage on the control grid is held constant by the filter action of C4118 as it discharges through R4124 back to the −2450 volt line. R4124 is a very high resistance, so the RC time constant of C4118 and R4124 is long in respect to the frequency of the sample voltage from T4015. Whatever charge is leaked off of C4118 during the positive transitions of the sample voltage will be replaced by C4117 when the sample voltage makes its negative transitions.

The fast rise and fall of the unblanking pulses from the Z-Axis Amplifier are coupled by C4118 to the control grid to start the crt beam current change. The DC Restorer output level then follows the Z-Axis output level to set the new bias level on the control grid.

In the event of a failure that causes a loss of potential on either the control grid or the cathode, protection against arcing is provided by DS4124 and DS4125.

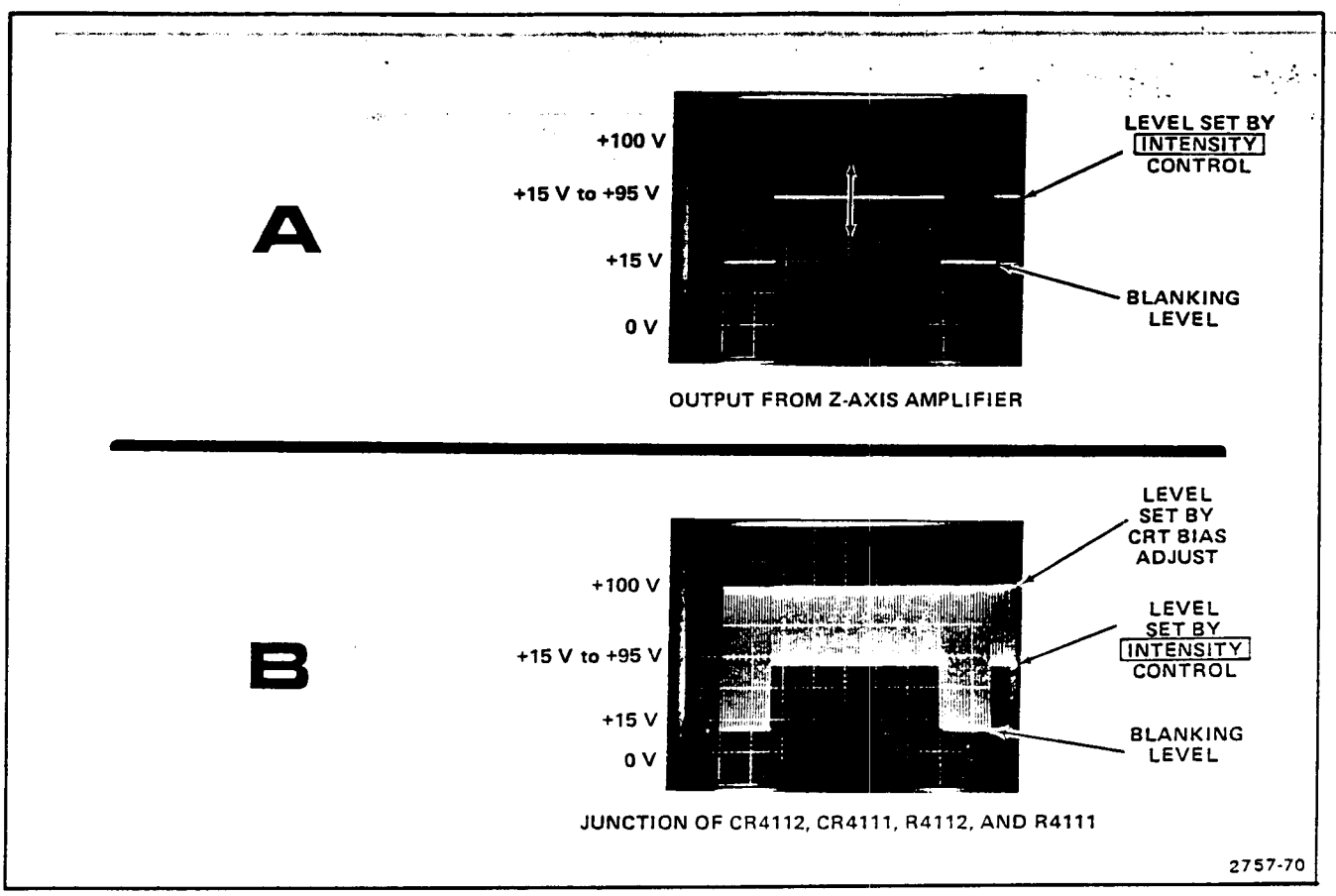


Figure 3-11. (A) Z-Axis Amplifier output. (B) Clamped sample voltage at the junction of CR4111 and CR4112.

## CALIBRATOR 13

### Introduction

The Calibrator circuit produces a square-wave output signal with accurate voltage and current amplitudes. This output is available as both a voltage and a current at the CALIBRATOR current loop on the instrument front panel. Figure 3-12 shows a detailed block diagram of the Calibrator circuit.

### Multivibrator

Transistors Q4182 and Q4196 and associated circuitry are configured as an astable multivibrator. The basic frequency of the multivibrator is approximately 1 kilohertz and is primarily determined by the resistance and capacitance of C4187, R4186, R4191, R4184, and R4185. Transistors Q4182 and Q4196 alternately conduct, producing a square-wave output signal. This output is taken from the collector of Q4196.

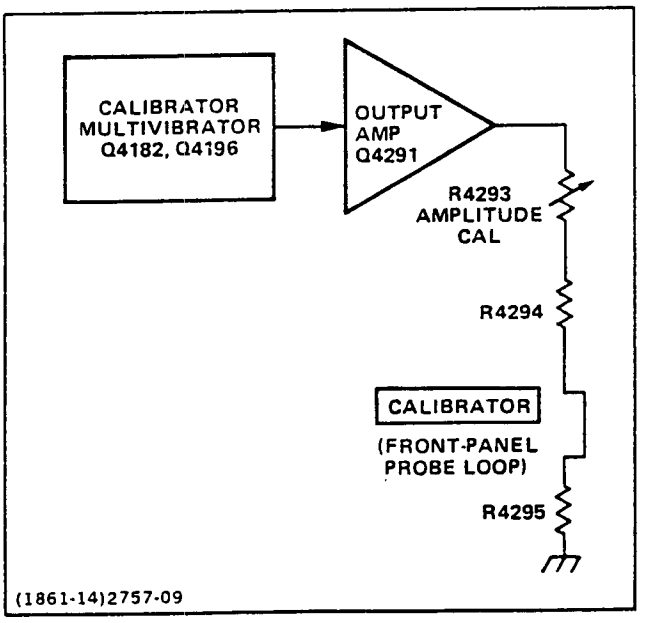


Figure 3-12. Detailed block diagram of the Calibrator circuit.

Refer to Figure 3-13 for the following discussion. At $t_0$ assume that the circuit is operating and has reached its normal operating conditions. Also assume Q4182 is off and Q4196 is on. At $t_0$, the emitter of Q4182 is at approximately +9 volts, and the emitter of Q4196 is at +7.5 volts with its base at approximately +7.0 volts. From $t_0$ to $t_1$, C4187 charges toward the +55 volt supply through R4186. When the emitter of Q4182 reaches +15.6 volts, Q4182 becomes forward biased. At $t_1$, the collector of Q4182 rises to approximately +14.6 volts, and since the base of Q4196 is directly connected to the collector of Q4182, Q4196 is cut off.

Now C4187 charges in the opposite direction. At $t_1$, as C4187 starts charging through R4191 and Q4182, the emitter of Q4196 rises from +7.6 volts to approximately +14.6 volts. When +14.6 volts is reached at $t_2$, Q4196 begins to conduct, reducing both the charging current through C4187 and the collector current of Q4182. At $t_2$ the collector voltage of Q4182 drops in a negative direction and Q4196 conduction increases. The emitter of Q4196 drops from +14.6 volts to +7.6 volts. This negative transition is coupled through C4187 to the emitter of Q4182 to cut Q4182 off and the cycle repeats itself.

### Output Amplifier

The output signal from the Multivibrator drives Output Amplifier Q4291 to produce a square wave at the output. When the base of Q4291 goes positive, the transistor is cut off and its collector voltage drops to zero. When the base goes negative, Q4291 is biased into saturation, and the collector voltage rises in a positive direction to about +5 volts. Amplitude adjustment R4293 is used to adjust the resistance between the collector of Q4291 and ground to control the amount of current allowed to flow. This in turn determines the voltage developed across R4295. The output voltage, at the calibrator current loop on the 465B oscilloscope, is 300 millivolts ±1.0% and the output current is 30 milliamps ±2.0%.

## LOW-VOLTAGE POWER SUPPLY 12

### Introduction

The Low-Voltage Power Supply circuit provides the operating power for this instrument from five regulated supplies and one unregulated supply. Regulation provides stable, low-ripple output voltages. Figure 3-14 shows a detailed block diagram of the Power Supply circuit.

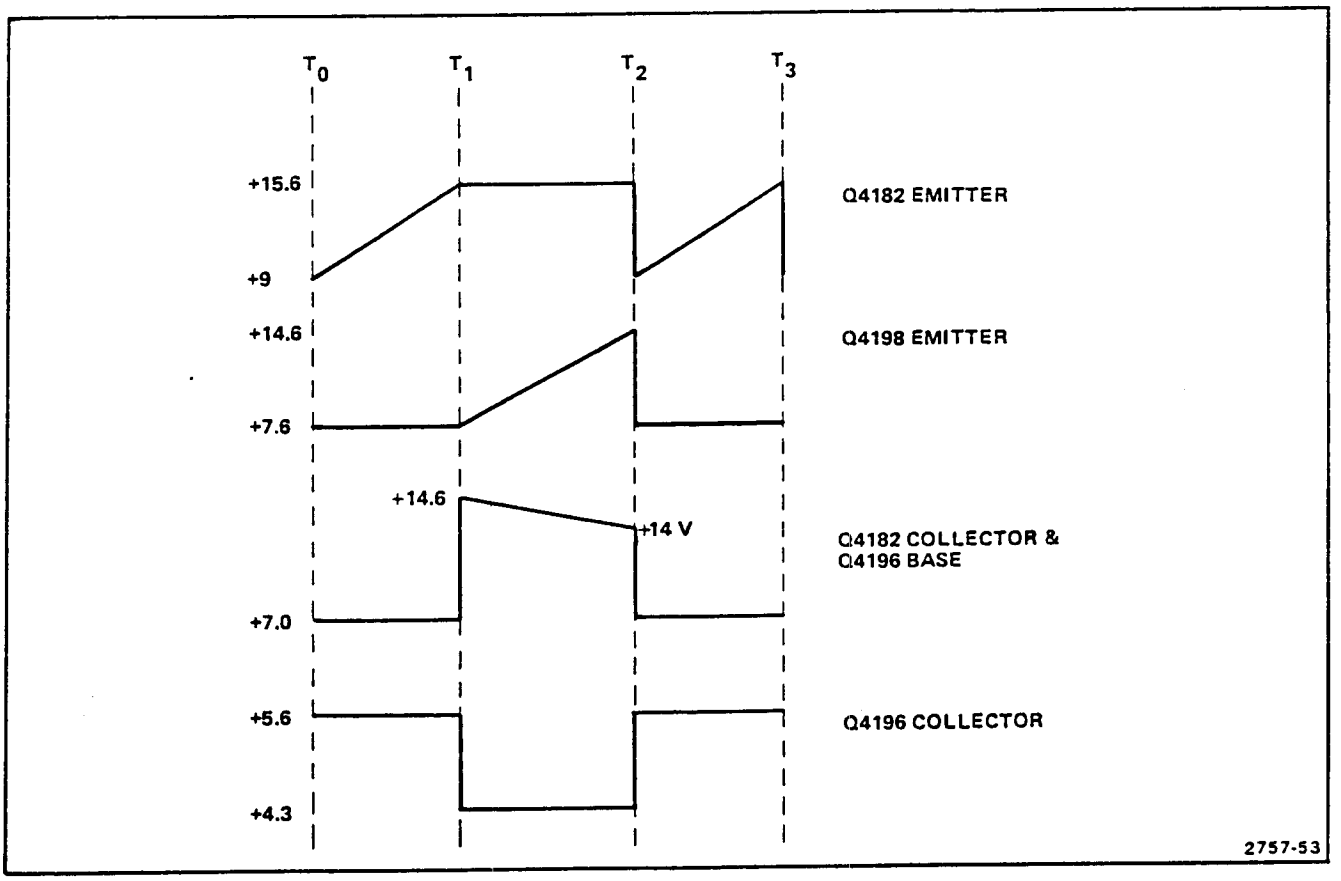


Figure 3-13. Calibrator circuit waveform diagram.

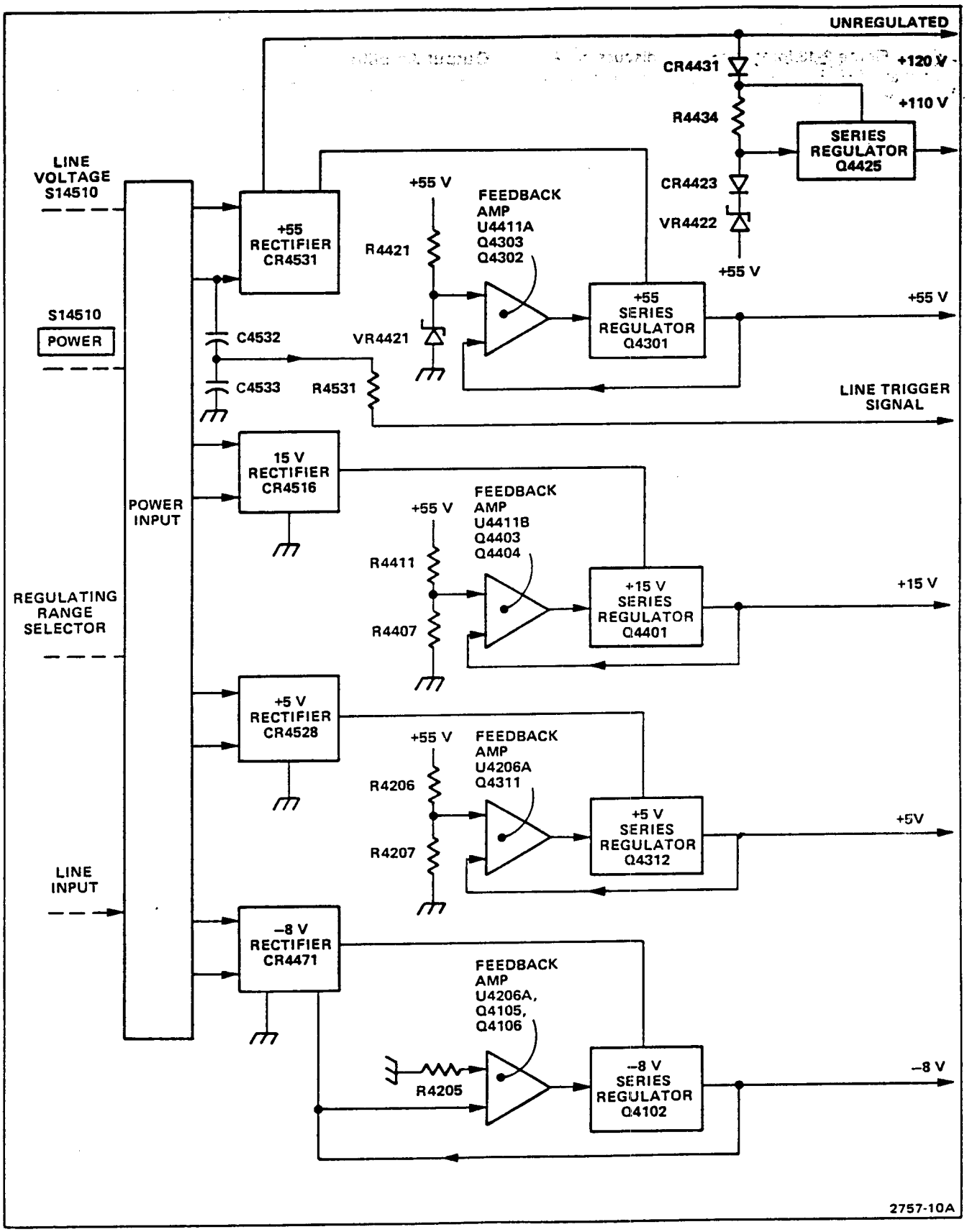


Figure 3-14. Detailed block diagram of the Low-Voltage Power Supply circuit.

### Power Input

Power is applied to the primary of transformer T14500 through Line Fuse F14500, POWER switch S14510, Thermal Cutout S14520, Line Voltage Selector switch S14500, and the Regulating Range Selector assembly. Line Voltage Selector switch S14500 connects the split primaries of T14500 either in parallel for 115-volt nominal operation or in series for 230-volt nominal operation. Line Fuse F14500 value is selected to provide the required protection for each nominal line voltage. Refer to Replaceable Electrical Parts list for correct fuse values.

The unused windings between pins 10, 11, and 12 of T14500 are intended for use with the optional Inverter Circuit Board (Option 07) or DM-series Digital Multimeters. Option 07 allows the instrument to be operated from an external dc power source or an 1106 Power Supply. Option 07 and the DM-series Digital Multimeters cannot be used at the same time.

### Secondary Circuit

The −8 volt, +5 volt, +15 volt, and +55 volt power supplies are series-regulated supplies. U4411A, U4411B, U4206A, and U4206B are two-channel, high-gain amplifier cells with differential inputs. These amplifiers monitor voltage variations in the output voltages and supply correction information to the series-regulating transistors. The +55 volt supply is the source of the reference voltage for the remaining supplies and its output must be correct or the −8 volt, +5 volt, and +15 volt supplies will not operate within their limits.

Current-limiting circuits provide short circuit protection for each of the regulated supplies. The following description applies only to the +55 volt current limiting circuit; the other current-limiting circuits operate in a similar manner.

In the +55 volt supply, Q4303 is normally biased off. Under normal conditions the base of Q4303 sets at about +55 volts. Under conditions of power supply loading, when the supply current increases, the voltage drop across R4303 increases. This increasing voltage is coupled through the base of Q4301 to the voltage divider, comprised of R4302 and R4208, causing the base of Q4303 to go more positive. When the supply current increases sufficiently, Q4303 turns on. The collector of Q4303 moves in the negative direction and begins turning off Q4302 and Q4301. Transistor Q4301 will continue conducting some current, even when the supply is limited, in order to produce enough voltage drop across R4303 to keep Q4303 biased on. The limited supply output voltage can be any value between its regulated value and zero, depending on the extra load it is trying to supply (see Figure 3-15). The limiting transistors for the other supplies are:

| | |
|---|---|
| +15 V | Q4404 |
| +5 V | Q4311 |
| −8 V | Q4106 |
| +110 V | Q4431 |

Figure 3-15 also shows the action of the current limit (foldover) circuit. At point A, Q4303 begins conducting. At point B the supply is directly shorted to ground through a current meter.

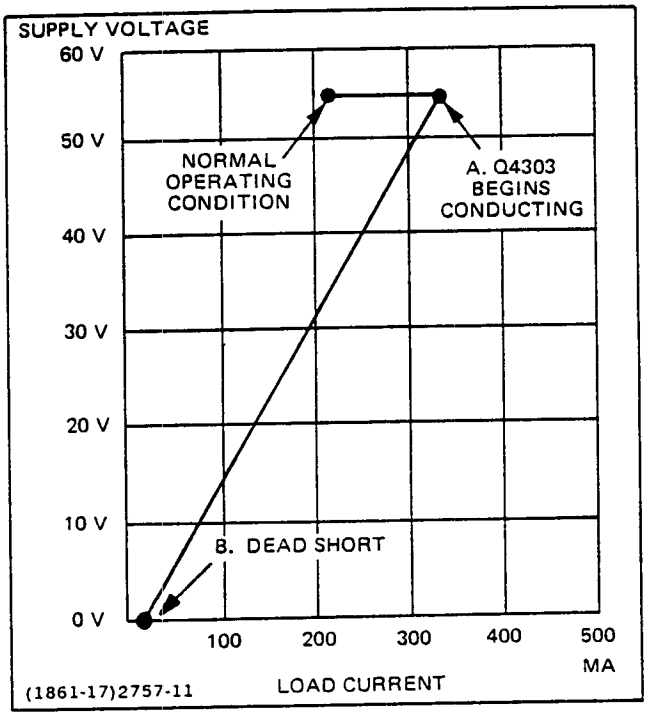


Figure 3-15. Foldover circuit action.

Components C4533, C4532, and R4527 are configured in a wave-shaping circuit arrangement that provides a sample of the ac voltage (present in the secondary of T14500) to the trigger circuitry for use in the LINE position of the A TRIGGER SOURCE switch.

## FAN MOTOR CIRCUIT 13

The fan motor used in the 465B is a brushless dc fan motor using Hall Effect devices. Motor circuitry varies the rotational speed of the fan with variations in operating temperature. When the ambient temperature increases, the value of thermistor RT8038 is reduced. This causes the forward bias on Q8067 to increase and Q8067 conducts more current through the Hall Effect devices. Higher currents through the Hall Effect devices cause the potential difference across them (e.g., between pins 6 and 8 of the fan) to increase. This potential difference biases one of a pair of transistors on and the other off. In the example, if fan pin 8 is more positive than pin 6, U8061A will be on and U8061D will be off. The higher the potential difference between pin 8 and pin 6, the harder the on transistor will conduct; the harder the transistor conducts, the faster the fan rotates.

# CALIBRATION PROCEDURE

## Introduction

This section of the manual is in two parts; Performance Check and Adjustment Procedure. Each subsection has a different purpose and important information regarding their use is included at the beginning of both subsections.

## Test Equipment Required

The test equipment listed in Table 4-1, or an equivalent piece of test equipment, is required if the complete Performance Check and Adjustment Procedure is to be accomplished on the oscilloscope. A partial list of test equipment is provided in the Performance Check subsection to list the required test equipment type to complete the Performance Check only.

In Table 4-1, the specifications given for the equipment are the minimum necessary to provide accurate results. Therefore, the equipment used must meet or exceed the listed specifications. Detailed operating instructions for the test equipment are not given in this procedure. Refer to the appropriate instruction manual if more test equipment operating information is required.

Table 4-1

TEST EQUIPMENT REQUIRED

| Description | Minimum Specifications | Usage | Examples |
|---|---|---|---|
| 1. Variable Autotransformer | Capable of supplying 1.2 A over a range of 104 to 127 V. | Power supply regulation check. | General Radio W8MT3VM Variac Autotransformer. |
| 2. Digital Voltmeter | Range, 0 to 140 V; dc voltage accuracy, within 0.15%; display 4 1/2 digits. | Low-Voltage Power Supply checks and adjustments. CRT Grid Bias adjustment. Vertical and Horizontal Centering adjustments. Calibrator Output Voltage adjustment. | a. TEKTRONIX DM 501 Digital Multimeter[a].<br>b. Any digital voltmeter that meets minimum specifications. |
| 3. DC Voltmeter | Range, 0 to 2500 V; calibrated to 1% accuracy at −2450 V. | High-Voltage Power Supply adjustment. | a. Triplett Model 630-NA.<br>b. Simpson Model 262. |
| 4. Test Oscilloscope with 10X probe and 1X probe. (1X probe is optional accessory) | Bandwidth, dc to 100 MHz; minimum deflection factor, 5 mV/division; accuracy, within 3%; dual trace. Scale-factor switching. | Power Supply Ripple Check. CRT Z-Axis Compensation; Vertical gain adjustment. A Trigger Holdoff check. A and B +Gate output signals check. | a. TEKTRONIX 465B Oscilloscope with 2 (included) 10X probes.<br>b. TEKTRONIX 475 Oscilloscope with 2 (included) 10X probes.<br>c. TEKTRONIX P6101 1X probe 010-6101-03. |

**Table 4-1 (cont)**

| Description | Minimum Specifications | Usage | Examples |
|---|---|---|---|
| 5. Calibration Generator | Standard-amplitude accuracy, within 0.25%; signal amplitude, 2 mV to 50 V; output signal, 1 kHz square wave. Fast-rise repetition rate, 1 to 100 kHz; rise time, 1 ns or less; signal amplitude, 100 mV to 1 V; aberrations, within 2%. High-amplitude output, 60 V pulse supplying at least 10 mA. | Vertical checks and adjustments. Trigger View checks and adjustments. X Gain adjustment. Z-axis check. | a. TEKTRONIX PG 506 Calibration Generator.[a]<br>b. Standard Amplitude Calibrator (Amplitude Calibrator only). Tektronix Part number 067-0502-01.<br>c. TEKTRONIX Type 106 Square Wave Generator (Fast rise and High Amplitude only). |
| 6. Sine-wave Generator | Frequency, 350 kHz to above 100 MHz; output amplitude variable from 0.5 to 5.5 V peak-to-peak; output impedance: 50 Ω; reference frequency, 50 to 350 kHz; amplitude accuracy, constant within 3% of reference frequency as output frequency changes. | Vertical Centering. Bandwidth and Isolation checks. Trigger checks and adjustments. X-Y Phase Difference. X Bandwidth check. | a. TEKTRONIX SG 503 Leveled Sine-wave Generator.[a]<br>b. TEKTRONIX Type 191 Constant-Amplitude Signal Generator. |
| 7. Time-Mark Generator | Marker outputs, 2 ns to 0.5 s; marker accuracy, within 0.1%; trigger output, 1 ms to 0.1 μs, time coincident with markers. | CRT Y-Axis and geometry adjustments. Auto Trigger check. Horizontal timing checks and adjustments. | TEKTRONIX TG 501 Time-Mark Generator.[a] |
| 8. Low Frequency Generator | Frequency, 60 Hz to 100 kHz; output amplitude, variable from 30 mV to 4 V peak-to-peak. Positive square-wave output amplitude, 5 V. | Low-Frequency Trigger checks. Vertical Compensation | TEKTRONIX SG 502 Oscillator.[a] |
| 9. 50 Ω Signal Pickoff | Frequency response, 50 kHz to 100 MHz; impedance 50 Ω for signal input, signal output, and trigger output. | Trigger checks and adjustments. | TEKTRONIX CT-3 Signal Pickoff. Part Number 017-0061-00. |
| 10. Cable (2 Required) | Impedance, 50 Ω; length, 42 inches; connectors, bnc | Signal Interconnection. | Tektronix Part Number 012-0057-01. |
| 11. Cable (2 Required) | Impedance, 50 Ω; length, 18 inches; connectors, bnc | Signal interconnection. | Tektronix Part Number 012-0076-00. |
| 12. Adapter | Connectors, GR874-to-bnc female. | Signal interconnection. | Tektronix Part Number 017-0063-00. |
| 13. Adapter | Connectors, GR874-to-bnc male. | Signal interconnection. | Tektronix Part Number 017-0064-00. |

Table 4-1 (cont)

| Description | Minimum Specifications | Usage | Examples |
|---|---|---|---|
| 14. Adapter | Connectors, bnc female-to-bnc female. | Signal interconnection. | Tektronix Part Number 103-0028-00. |
| 15. Adapter | Connectors, bnc-female-to-coaxial cable connector. | Signal interconnection. | Tektronix Part Number 131-1315-01. |
| 16. Adapter | Connectors, bnc-male-to-miniature probe tip. | Signal interconnection. | Tektronix Part Number 013-0084-01. |
| 17. Dual-Input Coupler (2 required) | Connectors, bnc female-to-2-bnc male. | Vertical checks. Trigger checks and adjustments. X-Y Phase check. | Tektronix Part Number 067-0525-01. |
| 18. T Connector | Connectors, bnc. | Signal interconnection. | Tektronix Part Number 103-0030-00. |
| 19. 10X Attenuator (2 required) | Ratio, 10X; impedance, 50 Ω; connectors, bnc. | Vertical Compensation. Vertical Bandwidth check. Trigger adjustments. | Tektronix Part Number 011-0059-02. |
| 20. 5X Attenuator | Ratio, 5X; impedance, 50 Ω; connectors, bnc. | Vertical System Compensation adjustments. Trigger adjustments. | Tektronix Part Number 011-0059-02. |
| 21. 2X Attenuator | Ratio, 2X; impedance, 50 Ω; connectors, bnc. | Vertical System Compensation. Trigger adjustments. | Tektronix Part Number 011-0069-02. |
| 22. Termination (2 required) | Impedance, 50 Ω; connectors, bnc. | Signal termination. | Tektronix Part Number 011-0049-01. |
| 23. Screwdriver | Length, 3-inch shaft, bit size, 3/32 inch. | Adjust variable resistors. | Xcelite R-3323. |
| 24. Low-Capacitance Screwdriver | Length, 1-inch shaft; bit size, 3/32 inch. | Adjust all variable capacitors. | J.F.D. Electronics Corp. Adjustment Tool Number 5284. |
| 25. Shorting Strap | | Calibrator adjustment. | |

*Requires a TM 500 Series power module.

For Service Manuals Contact
MAURITRON TECHNICAL SERVICES
8 Cherry Tree Rd, Chinnor
Oxon OX9 4QY
Tel:- 01844-351694 Fax:- 01844-352554
Email:- enquiries@mauritron.co.uk

# PERFORMANCE CHECK

## Purpose

The following procedure is intended to be used for incoming inspection to determine the acceptability of newly purchased or recently recalibrated instruments. This procedure does not check every facet of the instrument's calibration; rather it is concerned primarily with those portions of the instrument that are essential to measurement accuracy and correct operation. Removing the instrument's dust cover is not necessary to perform this procedure. All checks are made from the front panel.

*NOTE*

*If a complete check of every facet of the instrument's operation is desired, perform the calibration procedure, eliminating the ADJUST portion of the Check/Adjust steps.*

## Limits and Tolerances

All limits and tolerances given in this procedure are performance guides and should not be interpreted as specifications unless they are found in the Specification section of this manual.

## Line Voltage Selection

This procedure is for 115 Vac line, medium range. If a different range is to be used, set the Regulating Range Selector and Line Voltage Selector for the available line voltage (see Operating Voltage in the Installation Instructions of this manual).

## Test Equipment Required

The following equipment is required to perform a complete Performance Check. For equipment specifications, usage, and recommended types, see Table 4-1.

1. Calibration Generator
2. Square-wave Generator
3. Leveled Sine-wave Generator
4. Time-mark Generator
5. 42-inch, 50 Ω Bnc Cable (2 required)
6. Dual-input Coupler (2 required)
7. GR-to-bnc-male Adapter
8. GR-to-bnc-female Adapter
9. 10X Bnc Attenuator
10. 2X Bnc Attenuator
11. 50 Ω Bnc Termination (2 required)
12. 50 Ω Signal Pickoff Unit (Type CT-3)
13. Bnc-to-miniature-probe-tip Adapter
14. Bnc T Connector
15. 10X Scale-factor-switching Probe or 11 kΩ resistor.

## Special Fixtures

Special fixtures are used only where they simplify the test setup and procedure. These fixtures are available from Tektronix, Inc. Order by part number through your local Tektronix Field Office or representative.

## Test Equipment Alternatives

When equipment other than that recommended is used, control settings or test setup may need to be altered. If the exact item of equipment given as an example in the Test Equipment list is not available, first check the Minimum Specifications column carefully to see if any other equipment might suffice. Then check the Usage column to see the purpose of this item. If used for a check that is of little or no importance to your measurement requirements, the item and corresponding steps can be deleted.

## Preparation

Connect test equipment and instrument to be performance checked to an appropriate power input source. Turn on and allow a 20-minute warmup period before commencing Performance Check.

@

# INDEX TO PERFORMANCE CHECK PROCEDURE

**Vertical** **Page**

1. Check TRACE ROTATION . . . . . 4-6
2. Check ALT Mode . . . . . 4-6
3. Check CHOP Mode . . . . . 4-7
4. Check CH 1 Balance . . . . . 4-7
5. Check CH 2 Balance . . . . . 4-7
6. Check Vertical POSITION Range and Centering . . . . . 4-7
7. Check BEAM FIND Operation . . . . . 4-8
8. Check CH 1 and CH 2 Deflection Factor . . . 4-8
9. Check CH 1 and CH 2 VAR VOLTS/DIV Range 4-8
10. Check ADD Mode . . . . . 4-8
11. Check INVERT Mode . . . . . 4-9
12. Check Vertical Low-Frequency Compensation 4-9
13. Check CH 1 and CH 2 Volts/Division Compensation . . . . . 4-9
14. Check CH 1 and CH 2 Transient Response . 4-9
15. Check CH 1 and CH 2 Bandwidth . . . . . 4-10
16. Check Cascaded Gain and Bandwidth . . . . . 4-10
17. Check Trigger View Centering and Gain . . . 4-10
18. Check Trigger View Low-Frequency Compensation . . . . . 4-11
19. Check Trigger View High-Frequency Compensation . . . . . 4-11
20. Check Zero Trigger View Delay . . . . . 4-11

**Triggers**

1. Check A and B Internal Triggering . . . . . 4-12
2. Check A and B External Triggering . . . . . 4-13
3. Check A NORM TRIG MODE . . . . . 4-13
4. Check SINGL SWP TRIG MODE . . . . . 4-13

**Horizontal**

1. Check A and B TIME/DIV Accuracy . . . . . 4-15
2. Check A VAR TIME/DIV Range . . . . . 4-16
3. Check Delay or Differential Time Linearity . . 4-16
4. Check Delay or Differential Time Accuracy . 4-16
5. Check Delay or Differential Jitter . . . . . 4-17
6. Check ALT Horizontal Display Trace Separation . . . . . 4-17
7. Check A INTEN and B ENDS A Operation . . 4-17
8. Check X Gain . . . . . 4-18
9. Check X Bandwidth . . . . . 4-18

# VERTICAL

**Equipment Required**

1. Calibration Generator
2. Leveled Sine-wave Generator
3. 42-inch, 50 Ω Bnc Cable (2 required)
4. 10X Scale-factor-switching Probe
5. 50 Ω Bnc Termination (2 required)
6. 10X Bnc Attenuator
7. 5X Bnc Attenuator
8. 2X Bnc Attenuator
9. Bnc T Connector
10. Bnc-to-probe Tip Adapter
11. Dual-input coupler

**465B Control Settings**

| | |
|---|---|
| POWER | ON |

**CRT**

| | |
|---|---|
| INTENSITY | As desired |
| FOCUS | Best focused display |
| SCALE ILLUM | As desired |

**Vertical (CH 1 and CH 2)**

| | |
|---|---|
| VERT MODE | CH 1 |
| POSITION | Midrange |
| VOLTS/DIV | 5 mV |
| VAR VOLTS/DIV | Calibrated detent |
| AC-GND-DC | GND |
| INVERT | Normal (button out) |
| 20 MHz BW LIMIT | Full bandwidth (button out) |

**Trigger (A and B)**

| | |
|---|---|
| COUPLING | AC |
| LEVEL | Midrange |
| SLOPE | + |
| SOURCE | NORM |
| TRIG MODE | AUTO |
| A TRIGGER HOLDOFF | NORM |

**Sweep (A and B)**

| | |
|---|---|
| HORIZ DISPLAY | A |
| TIME/DIV | 1 ms |
| VAR TIME/DIV | Calibrated detent |
| DELAY TIME POSITION | Fully counterclockwise |
| X10 MAG | Off (button out) |
| POSITION (Horizontal) | Midrange |

## 1. Check TRACE ROTATION

a. Position the trace to the center horizontal graticule line.

b. Check that the trace is parallel with the center horizontal graticule line. Readjust TRACE ROTATION if necessary (front-panel screwdriver adjustment).

## 2. Check ALT Mode

*NOTE*

*VERT MODE switches are push-push switches that must be pressed to select a particular VERT MODE and pressed again to remove the trace from the crt display. For example, selecting CH 1 VERT MODE does not release any VERT MODEs previously selected, and the CH 1 VERT MODE switch must be pressed again to remove the CH 1 trace from the display.*

a. Set:

| | |
|---|---|
| VERT MODE | CH 1, CH 2, A TRIG VIEW, ADD, and ALT |
| AC-GND-DC (both) | GND |
| A TRIGGER SOURCE | EXT |

b. Use the CH 1 and CH 2 Vertical POSITION controls to spread the CH 1, CH 2, and ADD traces approximately 2 divisions apart. Use A TRIGGER LEVEL to position the A TRIG VIEW trace between the vertical channel traces.

c. CHECK—Sweeps alternate in all settings of the A TIME/DIV switch except X-Y. The order of alternation is as follows: CH 1, CH 2, ADD, then A TRIG VIEW.

d. Press ADD and A TRIG VIEW VERT MODE switches to remove their traces from the crt display.

### 3. Check CHOP Mode

a. Set:

| | |
|---|---|
| A TIME/DIV | 1 μs |
| A TRIGGER SOURCE | NORM |
| VERT MODE | CH 1, CH 2, and CHOP |

b. Use the Channel 1 and Channel 2 Vertical POSITION controls to position the two traces about 4 divisions apart.

c. Adjust A TRIGGER LEVEL for a stable display.

d. CHECK—Period of one cycle is approximately 2 μs.

e. Press ADD and A TRIG VIEW VERT MODE switches.

f. CHECK—Chopped display has four levels.

g. CHECK—Display for blanking of switching transients.

h. Press ADD, A TRIG VIEW, and CH 2 VERT MODE switches to remove their traces from the crt display.

### 4. Check CH 1 Balance

a. Set:

| | |
|---|---|
| VERT MODE | CH 1 |
| CH 1 VOLTS/DIV | 20 mV |

b. Position the trace to the center horizontal graticule line.

c. CHECK—Trace shift is 1.0 division or less as the CH 1 VAR VOLTS/DIV control is rotated from one extreme to the other extreme.

d. CHECK—CH 1 UNCAL LED comes on when the VAR control is out of the detent position.

e. Return CH 1 VAR to calibrated detent.

### 5. Check CH 2 Balance

a. Set:

| | |
|---|---|
| VERT MODE | CH 2 |
| CH 2 VOLTS/DIV | 20 mV |

b. Position the trace to the center horizontal graticule line.

c. CHECK—Trace shift is 1.0 division or less as the CH 2 VAR VOLTS/DIV control is rotated from one extreme to the other extreme.

d. CHECK—CH 2 UNCAL LED comes on when the VAR control is out of the detent position.

e. Return CH 2 VAR to calibrated detent.

f. Position the trace to the center horizontal graticule line.

g. CHECK—Trace shift is 2 divisions or less when switching from normal to INVERT.

### 6. Check Vertical POSITION Range and Centering

a. Set:

| | |
|---|---|
| CH 1 VOLTS/DIV | 20 mV |
| CH 2 VOLTS/DIV | 0.1 V |
| AC-GND-DC (both) | DC |
| A TRIGGER LEVEL | Fully Clockwise |
| INVERT | Normal (button out) |

b. Connect the leveled sine-wave generator output to the CH 2 OR Y input via a 50 Ω bnc cable and a 50 Ω bnc termination. Set the generator frequency to 50 kHz and adjust output for a vertical display of 4.8 divisions.

c. Set CH 2 VOLTS/DIV to 20 mV.

d. CHECK—Top of display can be positioned down to the center horizontal graticule line, and bottom of display can be positioned up to the center horizontal graticule line.

e. Move the signal from the CH 2 OR Y input to the CH 1 OR X input connector.

f. Set VERT MODE switches for CH 1 display.

g. Repeat Step 6, part d, for CH 1.

## 7. Check BEAM FIND Operation

a. Push in and hold the BEAM FIND button.

b. CHECK—A compressed trace is visible regardless of the settings of the:

CH 1 POSITION control,
INTENSITY control, or
Horizontal POSITION control.

c. Return the Horizontal POSITION control and the INTENSITY control to midrange.

d. While still holding in the BEAM FIND button, vertically position the trace to the center horizontal graticule line.

e. Release the BEAM FIND button.

f. CHECK—Trace remains within the graticule area.

g. Disconnect the test equipment.

## 8. Check CH 1 and CH 2 Deflection Factor

a. Connect calibration generator standard-amplitude output to the CH 1 input connector via a 50 Ω bnc cable. Use no termination. Set the generator for a 20 mV signal and set the 465B AC-GND-DC switches to DC.

b. CHECK—CH 1 deflection factor is within the limits given in Table 4-2.

c. Set the VERT MODE switches to display CH 2, and move the signal from CH 1 OR X input to the CH 2 OR Y input connector.

d. CHECK—CH 2 deflection factor is within the limits given in Table 4-2.

**Table 4-2**

**DEFLECTION FACTOR LIMITS**

| VOLTS/DIV Switch Setting | Standard Amplitude Signal | Vertical Deflection in Divisions | 3% Tolerance in Divisions |
|---|---|---|---|
| 5 mV | 20 mV | 4 | 3.88 to 4.12 |
| 10 mV | 50 mV | 5 | 4.85 to 5.15 |
| 20 mV | 0.1 V | 5 | 4.85 to 5.15 |
| 50 mV | 0.2 V | 4 | 3.88 to 4.12 |
| 0.1 V | 0.5 V | 5 | 4.85 to 5.15 |
| 0.2 V | 1.0 V | 5 | 4.85 to 5.15 |
| 0.5 V | 2.0 V | 4 | 3.88 to 4.12 |
| 1.0 V | 5.0 V | 5 | 4.85 to 5.15 |
| 2.0 V | 10.0 V | 5 | 4.85 to 5.15 |
| 5.0 V | 20.0 V | 4 | 3.88 to 4.12 |

## 9. Check CH 1 and CH 2 VAR VOLTS/DIV Range

a. Set:

VOLTS/DIV (both) 20 mV

b. Set the calibration generator for a 0.1 V standard-amplitude output signal.

c. CHECK—Display reduces to less than 2 divisions when the CH 2 VAR VOLT/DIV control is rotated to its extreme counterclockwise position.

d. Move the signal to the CH 1 OR X input connector and set the VERT MODE switches to display CH 1.

e. CHECK—Repeat part c using the CH 1 VAR VOLTS/DIV control.

f. Return the VAR controls to the calibrated detent position and remove the signal from the CH 1 input connector.

## 10. Check ADD Mode

a. Set:

VOLTS/DIV (both) 5 mV
VERT MODE ADD

b. Connect calibration generator standard-amplitude signal to the CH 1 and CH 2 input connectors via a 50 Ω bnc cable and dual-input coupler.

c. Set calibration generator for 10 mV output amplitude.

d. CHECK—Display is approximately 4 divisions.

## 11. Check INVERT Mode

a. Press CH 2 INVERT push button in.

b. CHECK—Display is approximately zero division.

## 12. Check Vertical Low-Frequency Compensation

a. Set:

| | |
|---|---|
| TIME/DIV (both) | 0.2 ms |
| VOLTS/DIV (both) | 5 mV |

b. Connect the calibration generator fast-rise ÷ output to the CH 1 input connector via a 50 Ω bnc cable, 10X bnc attenuator, and 50 Ω bnc termination.

c. Set the calibration generator to 1 kHz and adjust output controls for a vertical display of 5 divisions. Adjust the A TRIGGER LEVEL control for a stable display.

d. CHECK—Rounding or overshoot is within 3% (0.15 division) at the frequencies listed in Table 4-3.

**Table 4-3**

**LOW-FREQUENCY COMPENSATION SETUP**

| Calibration Generator Frequency | TIME/DIV Switch Setting |
|---|---|
| 1 kHz | 0.2 ms |
| 10 kHz | 20 μs |
| 100 kHz | 2 μs |

## 13. Check CH 1 and CH 2 Volts/Division Compensation

a. Set:

| | |
|---|---|
| VOLTS/DIV (both) | 5 mV (see note) |
| A TIME/DIV | 0.2 ms |

*NOTE*

*In step 13 all VOLTS/DIV settings require the use of a 10X probe with scale-factor switching (preferably the probe supplied as a standard accessory with the oscilloscope you are performance checking). If it is necessary to use a 10X probe without scale-factor switching, set the VOLTS/DIV to indicate one tenth of the settings listed.*

b. Connect a 10X probe to the CH 1 input connector (note that the VOLTS/DIV Scale-Factor switching LED indicates 50 mV).

c. Connect the square-wave generator high-amplitude output through a 2X, 5X, or 10X bnc attenuator (depending on generator amplitude), to a 50 Ω bnc termination that is connected to a bnc-to-probe tip adapter. Insert the 10X-probe tip into the probe-tip adapter.

d. Adjust the square-wave generator for a 5-division, 1 kHz display, and add or remove attenuators and termination as necessary to maintain a 5-division display throughout step 13.

e. Adjust the probe compensation for the best flat-top waveform. Do not re-adjust probe compensation throughout the remainder of step 13.

f. CHECK—Rounding or overshoot on the waveform is within 3% (±0.15 division) at all settings of the VOLTS/DIV switch between 50 mV and 5 V.

g. Move the test setup to CH 2 input connector and set the VERT MODE switches to display CH 2.

h. Repeat step 13, part f, for Channel 2 (add or remove attenuators as necessary to maintain a 5-division display).

i. Disconnect probe and generator.

## 14. Check CH 1 and CH 2 Transient Response

a. Set:

| | |
|---|---|
| TIME/DIV (both) | 0.05 μs |
| VOLTS/DIV (both) | 5 mV |
| A TRIGGER SLOPE | + |

b. Connect the calibration generator fast-rise + output to the CH 2 input connector via a 50 Ω bnc cable, 10X, 5X, or 2X bnc attenuator, and 50 Ω bnc termination. Set the generator frequency to 100 kHz and adjust output controls for a vertical display of 5 divisions. Adjust the generator output and add or remove attenuators as necessary to maintain a 5-division display throughout this check.

c. CHECK—Flat-top waveform is within 4% or less (0.2 division) for the 5 mV, 10 mV, and 20 mV positions of the VOLTS/DIV switch.

d. Move the test setup to the CH 1 input connector and set the VERT MODE switches to display CH 1.

e. CHECK—Repeat part c for Channel 1.

f. Disconnect the test setup.

## 15. Check CH 1 and CH 2 Bandwidth

a. Set:

| | |
|---|---|
| VOLTS/DIV (both) | 5 mV |
| A TIME/DIV | 0.2 ms |
| A TRIGGER LEVEL | Fully clockwise |

b. Connect the leveled sine-wave generator output to the CH 1 input connector via a 50 Ω bnc cable, 10X bnc attenuator, and 50 Ω bnc termination.

c. Set the sine-wave generator output for a vertical display of 5 divisions at 50 kHz. Change the sine-wave generator output frequency to 100 MHz.

d. CHECK—Display amplitude is 3.5 divisions or greater.

e. Repeat parts c and d for all CH 1 VOLTS/DIV switch settings from 5 mV to 0.5 V. Adjust the generator and add or remove attenuators as needed to maintain a 5-division, 50 kHz reference display.

f. Move the sine-wave generator output signal from the CH 1 input to the CH 2 input connector and set the VERT MODE switches to display CH 2.

g. Repeat parts c and d for all CH 2 VOLTS/DIV switch settings from 5 mV ro 0.5 V.

h. Disconnect the test setup.

## 16. Check Cascaded Gain and Bandwidth

a. Set:

| | |
|---|---|
| VERT MODE | CH 2 |
| VOLTS/DIV (both) | 5 mV |
| TIME/DIV | 1 ms |

b. Connect the CH 1 VERT SIGNAL output connector (on the 465B rear panel) to the CH 2 input connector via a 50 Ω cable and a 50 Ω bnc termination.

c. Connect the calibration generator standard-amplitude output to the CH 1 input connector via a 50 Ω bnc cable. Set the calibration generator output for 5 mV.

d. CHECK—Display vertical amplitude is 5 divisions or greater.

e. Remove the calibration generator signal from the CH 1 input connector.

f. Connect the leveled sine-wave generator output to the CH 1 input connector via a 50 Ω bnc cable, 10X bnc attenuator, and 50 Ω bnc termination. Set the generator frequency to 50 kHz and adjust output controls for a vertical display of 5 divisions. Adjust the generator output frequency to 50 MHz.

g. CHECK—Display amplitude is 3.5 divisions or greater.

h. Disconnect the test setup.

## 17. Check Trigger View Centering and Gain

a. Set:

| | |
|---|---|
| VERT MODE | A TRIG VIEW |
| A TIME/DIV | 0.2 ms |
| A TRIGGER COUPLING | DC |
| A TRIGGER SOURCE | EXT |
| A TRIG MODE | AUTO |

b. Connect the calibration generator standard-amplitude output to the A External Trigger input connector via a 50 Ω bnc cable. Use no termination. Set the generator output to 0.5 V.

c. CHECK—Display amplitude is 5 divisions ±5% (5 divisions ±0.25 division).

d. CHECK—Display will trigger symmetrically within one graticule division when the A TRIGGER SLOPE is switched between + and −.

e. Set the A TRIGGER SOURCE to EXT/10 and change the output of the calibration generator to 5 V.

f. CHECK—Display amplitude is 5 divisions ±5% (5 divisions ±0.25 division).

g. Disconnect the calibration generator standard-amplitude signal from the A External Trigger input connector.

## 18. Check Trigger View Low-Frequency Compensation

a. Set:

| | |
|---|---|
| A TRIGGER SOURCE | EXT |
| A TIME/DIV | 0.1 ms |

b. Connect the calibration generator high-amplitude output to the A External Trigger input connector via a 50 Ω bnc cable and 50 Ω bnc termination. Set the calibration generator output for a vertical display of 5 divisions at 1 kHz.

c. CHECK—Square wave has less than 10% overshoot or rounding.

d. Set A TRIGGER SOURCE to EXT/10 and adjust generator output for a vertical display of 5 divisions.

e. CHECK—Square wave has less than 10% overshoot or rounding.

f. Disconnect the calibration generator high-amplitude output from the A External Trigger input connector.

## 19. Check Trigger View High-Frequency Compensation

a. Set:

| | |
|---|---|
| A TRIGGER SOURCE | EXT |
| A TIME/DIV | 0.2 μs |

b. Connect the calibration generator fast-rise + output to the A External Trigger input connector via a 50 Ω bnc cable, and 50 Ω bnc termination.

c. Set the calibration generator frequency for 100 kHz and adjust output for a vertical display of 5 divisions.

d. CHECK—Square-wave front-corner aberration is less than ±10% (±0.5 division).

e. Disconnect test setup.

## 20. Check Zero Trigger View Delay

a. Set:

| | |
|---|---|
| VERT MODE | CH 1 and A TRIG VIEW |
| A TIME/DIV | 0.02 μs |
| X10 MAG | On (button in) |
| A TRIGGER COUPLING | AC |
| CH 1 VOLTS/DIV | 0.1 V |

b. Connect output of sine-wave generator via bnc T, two 42-inch (equal length) 50 Ω bnc cables, and 50 Ω bnc terminations; one to the CH 1 input connector, and one to the A External Trigger input connector. Set sine-wave generator for a 6-division display of A TRIG VIEW at 40 MHz, then adjust CH 1 VAR and VOLTS/DIV to match the amplitude of the CH 1 display to the amplitude of the A TRIG VIEW display.

c. CHECK—Time difference with displays superimposed is ≤0.15 horizontal graticule divisions.

d. Set:

| | |
|---|---|
| HORIZ DISPLAY | B DLY'D |
| A TIME/DIV | 0.2 μs |
| B TIME/DIV | 0.02 μs |

e. CHECK—Time difference with displays superimposed is ≤0.15 horizontal graticule division.

f. Disconnect test setup.

# TRIGGERS

**Equipment Required**

1. Leveled Sine-wave Generator
2. Calibration Generator
3. 42-inch Bnc Cable (2 required)
4. Gr-to-bnc-female Adapter
5. Gr-to-bnc-male Adapter
6. 50 Ω Signal Pickoff Unit (Type CT-3)
7. 10X Bnc Attenuator
8. 2X Bnc Attenuator
9. 50 Ω Bnc Termination (2 required)
10. Dual-input Coupler (2 required)

## 465B Control Settings

| | |
|---|---|
| POWER | ON |

**CRT**

| | |
|---|---|
| INTENSITY | As desired |
| FOCUS | Best focused display |
| SCALE ILLUM | As desired |

**Vertical (CH 1 and CH 2)**

| | |
|---|---|
| VERT MODE | CH 1 |
| POSITION | Midrange |
| VOLTS/DIV | 5 mV |
| VAR VOLTS/DIV | Calibrated detent |
| AC-GND-DC | DC |
| INVERT | Normal (button out) |
| 20 MHz BW LIMIT | Full bandwidth (button out) |

**Trigger (A and B)**

| | |
|---|---|
| COUPLING | AC |
| LEVEL | Midrange |
| SLOPE | + |
| SOURCE | NORM |
| TRIG MODE | AUTO |
| A TRIGGER HOLDOFF | NORM |

**Sweep (A and B)**

| | |
|---|---|
| HORIZ DISPLAY | A |
| TIME/DIV | 5 μs |
| VAR TIME/DIV | Calibrated detent |
| DELAY TIME POSITION | Fully counterclockwise |
| X10 MAG | Off (button out) |
| POSITION (Horizontal) | Midrange |

## 1. Check A and B Internal Triggering

a. Connect the output of the leveled sine-wave generator to the A and B External trigger inputs via a 50 Ω cable, Gr-to-bnc-male adapter, 50 Ω signal pickoff unit (Type CT-3) THRU SIG OUT output, Gr-to-bnc-female adapter, 50 Ω bnc cable, 2X bnc attenuator, 10X bnc attenuator, 50 Ω bnc termination and dual-input coupler.

b. Connect the SIG OUT 10% on the CT-3 to the CH 1 and CH 2 inputs via a 50 Ω bnc cable, 50 Ω bnc termination and dual-input coupler.

c. Adjust the leveled sine-wave generator for either a 3-division, 50 kHz display and set both VOLTS/DIV switches to 50 mV (0.3 division of display), or a 5-division, 50 kHz display and set both VOLTS/DIV switches to 50 mV (0.5 division display) as necessary for parts d and f of step 1.

d. CHECK—Stable display can be obtained by adjusting the A TRIGGER LEVEL control in the following A TRIGGER COUPLING and A TRIGGER SOURCE switch positions:

| A TRIGGER COUPLING | A TRIGGER SOURCE | DISPLAY |
|---|---|---|
| AC | NORM, CH 1, CH 2 | 0.3 Div |
| DC | NORM, CH 1, CH 2 | 0.3 Div |
| LF REJ | NORM, CH 1, CH 2 | 0.5 Div |
| HF REJ | NORM, CH 1, CH 2 | 0.5 Div |

e. Set:

| | |
|---|---|
| HORIZ DISPLAY | B DLY'D |
| A TRIGGER LEVEL | Fully clockwise |



@

f. CHECK—Stable display can be obtained by adjusting the B TRIGGER LEVEL control in the following B TRIGGER COUPLING and B TRIGGER SOURCE switch positions:

| B TRIGGER COUPLING | B TRIGGER SOURCE | DISPLAY |
|---|---|---|
| AC | NORM, CH 1, CH 2 | 0.3 Div |
| DC | NORM, CH 1, CH 2 | 0.3 Div |
| LF REJ | NORM, CH 1, CH 2 | 0.5 Div |
| HF REJ | NORM, CH 1, CH 2 | 0.5 Div |

## 2. Check A and B External Triggering

a. Set:

CH 1 VOLTS/DIV 20 mV
TRIGGER SOURCE (both) EXT
TRIGGER COUPLING (both) AC

b. Adjust leveled sine-wave generator output for 5 divisions of display on the crt.

c. CHECK—Stable display can be obtained by adjusting B TRIGGER LEVEL control in the following B TRIGGER COUPLING switch positions:

AC, DC

d. Remove the 2X bnc attenuator and set B TRIGGER COUPLING switch to LF REJ then HF REJ.

e. CHECK—Stable display can be obtained by adjusting B TRIGGER LEVEL control.

f. Set:

HORIZ DISPLAY A
A TRIGGER COUPLING LF REJ then HF REJ

g. CHECK—Stable display can be obtained by adjusting A TRIGGER LEVEL control with A TRIGGER COUPLING in both LF REJ and HF REJ.

h. Replace the 2X bnc attenuator.

i. CHECK—Stable display can be obtained by adjusting A TRIGGER LEVEL control in the following A TRIGGER COUPLING switch positions:

AC, DC

j. Remove the 10X bnc attenuator and set the A TRIGGER SOURCE switch to EXT/10.

k. CHECK—Stable display can be obtained by adjusting the A TRIGGER LEVEL control in the following A TRIGGER COUPLING switch positions:

AC, DC

l. Remove the 2X bnc attenuator and set A TRIGGER COUPLING switch to LF REJ then HF REJ.

m. CHECK—Stable display can be obtained by adjusting A TRIGGER LEVEL control.

## 3. Check A NORM TRIG Mode

a. Set:

A TRIGGER COUPLING AC
A TRIGGER SOURCE NORM
A TRIG MODE AUTO

b. Adjust A TRIGGER LEVEL for a stable display.

c. Set TRIG MODE switch to NORM.

d. CHECK—Stable display is visible.

e. Set CH 1 AC-GND-DC switch to GND.

f. CHECK—No visible display in the absence of an adequate trigger signal.

## 4. Check SINGL SWP TRIG Mode

a. Set CH 1 AC-GND-DC switch to DC.

b. Adjust A TRIGGER LEVEL until display just triggers.

c. Set CH 1 AC-GND-DC switch to GND.

d. Press SINGL SWP push button in.

e. CHECK—READY LED comes on and stays on.

f. Set CH 1 AC-GND-DC switch to DC.

g. CHECK—READY LED goes out and a single sweep occurs.

h. Press SINGL SWP push button in.

i. CHECK—Single sweep occurs every time SINGL SWP push button is depressed.

j. Disconnect test setup.



@

*IMPORTANT NOTE*

*OSCILLOSCOPES WITH DIGITAL MULTIMETERS ATTACHED, REFER TO THE DIGITAL MULTIMETER MANUAL AT THIS POINT, THEN RETURN TO STEP 8 IN THE HORIZONTAL SECTION.*

*OSCILLOSCOPES WITHOUT DIGITAL MULTIMETERS, CONTINUE WITH THIS PROCEDURE.*

# HORIZONTAL

**Equipment Required**

1. Time-mark Generator
2. Calibration Generator
3. Leveled Sine-wave Generator
4. 42-inch, 50 Ω Bnc Cable
5. 50 Ω Bnc Termination

**465B Control Settings**

| | |
|---|---|
| POWER | ON |

**CRT**

| | |
|---|---|
| INTENSITY | As desired |
| FOCUS | Best focused display |
| SCALE ILLUM | As desired |

**VERTICAL (CH 1 and CH 2)**

| | |
|---|---|
| VERT MODE | CH 1 |
| POSITION | Midrange |
| VOLTS/DIV | 0.5 V |
| VAR VOLTS/DIV | Calibrated detent |
| AC-GND-DC | DC |
| INVERT | Normal (button out) |
| 20 MHz BW LIMIT | Full bandwidth (button out) |

**TRIGGER (A and B)**

| | |
|---|---|
| COUPLING | AC |
| LEVEL | Midrange |
| SLOPE | + |
| A SOURCE | NORM |
| B SOURCE | NORM |
| TRIG MODE | AUTO |
| A TRIGGER HOLDOFF | NORM |

**SWEEP (A and B)**

| | |
|---|---|
| HORIZ DISPLAY | A |
| TIME/DIV | 1 ms |
| VAR TIME/DIV | Calibrated detent |
| DELAY TIME POSITION | Fully counterclockwise |
| X10 MAG | Off (button out) |
| POSITION (Horizontal) | Midrange |

## 1. Check A and B TIME/DIV Accuracy

a. Connect the time-mark generator to CH 1 input via a 50 Ω bnc cable and a 50 Ω bnc termination.

b. CHECK—A and B timing accuracy according to Table 4-4. Timing to be accurate within 2% (0.2 division at the 11th time marker). If 11 time markers are not visible when checking B sweep, set the A TIME/DIV switch one step slower than the B TIME/DIV switch; for example:

| | |
|---|---|
| A TIME/DIV | 1 ms |
| B TIME/DIV | 0.5 ms |

When checking B timing, set HORIZ DISPLAY to B DLY'D and use B TRIGGER LEVEL to stabilize the display.

Table 4-4

A AND B TIMING ACCURACY

| A and B TIME/DIV Switch Setting | Time-Mark Generator Output | CRT Display (Markers/ Division) |
|---|---|---|
| 0.02 μs | 20 ns[a] | 1 |
| 0.05 μs | 50 ns | 1 |
| .1 μs | .1 μs | 1 |
| .2 μs | .2 μs | 1 |
| .5 μs | .5 μs | 1 |
| 1 μs | 1 μs | 1 |
| 2 μs | 2 μs | 1 |
| 5 μs | 5 μs | 1 |
| 10 μs | 10 μs | 1 |
| 20 μs | 20 μs | 1 |
| 50 μs | 50 μs | 1 |
| .1 ms | .1 ms | 1 |
| .2 ms | .2 ms | 1 |
| .5 ms | .5 ms | 1 |
| 1 ms | 1 ms | 1 |
| 2 ms | 2 ms | 1 |
| 5 ms | 5 ms | 1 |
| 10 ms[b] | 10 ms | 1 |
| 20 ms[b] | 20 ms | 1 |
| 50 ms[b] | 50 ms | 1 |
| **A SWEEP ONLY** | | |
| .1 s[b] | .1 s | 1 |
| .2 s[b] | .2 s | 1 |
| .5 s[b] | .5 s | 1 |

[a] If the time-mark generator used does not have a 1-2-5 sequence, set to 1 or 2 time-markers/division as necessary.

[b] For sweep time greater than 5 ms/div set TRIG MODE to NORM.

## 2. Check A VAR TIME/DIV Range

a. Set:

| | |
|---|---|
| HORIZ DISPLAY | A |
| A TRIG MODE | AUTO |
| TIME/DIV | 2 ms |

b. Select 5 ms time markers from the time-mark generator.

c. CHECK—At least 1 marker per division can be obtained by adjusting the VAR TIME/DIV control.

d. Return the VAR TIME/DIV control to the detent position.

## 3. Check Delay or Differential Time Linearity

a. Set:

| | |
|---|---|
| A TIME/DIV | 1 ms |
| B TIME/DIV | 5 μs |
| HORIZ DISPLAY | B DLY'D |
| B TRIGGER SOURCE | STARTS AFTER DELAY |

b. Select 1 ms time markers from the time-mark generator.

c. Turn DELAY TIME POSITION to set time marker nearest 1.00 on dial to coincide with graticule center and note reading.

d. Turn DELAY TIME POSITION to set time marker nearest 2.00 on dial to coincide with graticule center and note reading.

e. CHECK—Difference in readings is 1.00 ±0.01 (0.99 to 1.01), from −15°C to +35°C; ±0.03 (0.97 to 1.03), from −15°C to −55°C.

f. Turn DELAY TIME POSITION dial to set every adjacent time marker to coincide with graticule center and note reading.

g. CHECK—Difference of readings between any two adjacent time markers is 1.00, ±0.01 (0.99 to 1.01), from +15°C to +55°C; ±0.03 (0.97 to 1.03), from −15°C to +55°C.

## 4. Check Delay or Differential Time Accuracy

a. Set:

| | |
|---|---|
| HORIZ DISPLAY | B DLY'D |
| A TIME/DIV | 0.2 μs |
| B TIME/DIV | 0.05 μs |

b. Set the A TIME/DIV, B TIME/DIV and the time-mark generator to the settings given in Table 4-5. First set the DELAY TIME POSITION dial to 1.00. Adjust the horizontal POSITION control so the top of one of the displayed time markers crosses the center vertical graticule line. (If the top of the time marker at the beginning of the sweep isn't visible, then use the second time marker.) Without touching the horizontal POSITION control, set the DELAY TIME POSITION dial to 9.00. Slightly readjust the DELAY TIME POSITION dial to position the top of the displayed time marker to the center vertical graticule line.

Table 4-5

DELAY OR DIFFERENTIAL TIME ACCURACY

| A TIME/ DIV Switch Setting | B TIME/ DIV Switch Setting | Time-Mark Generator Output |
|---|---|---|
| .2 μs | .02 μs | .1 μs |
| .2 μs | .05 μs | .1 μs |
| .5 μs | .05 μs | .5 μs |
| 1 μs | .1 μs | 1 μs |
| 2 μs | .1 μs | 1 μs |
| 5 μs | .5 μs | 5 μs |
| 10 μs | 1 μs | 10 μs |
| 20 μs | 1 μs | 10 μs |
| 50 μs | 5 μs | 50 μs |
| .1 ms | 10 μs | .1 ms |
| .2 ms | 10 μs | .1 ms |
| .5 ms | 50 μs | .5 ms |
| 1 ms | .1 ms | 1 ms |
| 2 ms | .1 ms | 1 ms |
| 5 ms | .5 ms | 5 ms |
| 10 ms[a] | 1 ms | 10 ms |
| 20 ms[a] | 1 ms | 10 ms |
| 50 ms[a] | 5 ms | 50 ms |
| .1 s[a] | 10 ms | .1 s |
| .2 s[a] | 10 ms | .1 s |
| .5 s[a] | 50 ms | .5 s |

[a]For sweep times greater than 5 ms/div, set TRIG MODE to NORM.

c. CHECK—DELAY TIME POSITION dial setting to be 8.92 to 9.08.

d. Repeat parts b and c for each setting listed in Table 4-5.

## 5. Check Delay or Differential Jitter

a. Set:

| | |
|---|---|
| DELAY TIME POSITION | 9.00 |
| A TIME/DIV | 1 ms |
| B TIME/DIV | 0.2 μs |

b. Select 1 ms time markers.

c. Slightly readjust DELAY TIME POSITION dial to position a time marker on screen.

d. CHECK—Jitter on leading edge of the time marker does not exceed 1 division (2.5 divisions if operating from a 50 Hz line voltage). Disregard slow drift.

e. Set the DELAY TIME POSITION dial to 1.00 and repeat parts c and d.

f. Disconnect the time-mark generator.

## 6. Check ALT Horizontal Display Trace Separation

a. Set:

| | |
|---|---|
| HORIZ DISPLAY | A INTEN |
| A TIME/DIV | 1 ms |
| B TIME/DIV | .1 ms |
| B INTENSITY | As required for visible display |

b. Use CH 1 Vertical POSITION control to align the trace with the center horizontal graticule line.

c. Select ALT Horizontal Display.

d. CHECK—TRACE SEP control will move the B trace at least ±4 vertical divisions from the center graticule line with A trace centered.

## 7. Check A INTEN and B ENDS A Operation

a. Set:

| | |
|---|---|
| A TIME/DIV | 1 ms |
| B TIME/DIV | .1 ms |
| DELAY TIME POSITION | About 5.00 |
| HORIZ DISPLAY | A INTEN |

b. CHECK—B portion of trace is intensified (about 1 division).

c. Rotate A TRIGGER HOLDOFF control clockwise to the B ENDS A position (in the detent).

d. CHECK—Trace ends at the end of the intensified portion.

## 8. Check X Gain

a. Set:

| | |
|---|---|
| TIME/DIV (both) | X-Y |
| VOLTS/DIV (both) | 5 mV |
| CH 1 AC-GND-DC | AC |
| CH 2 AC-GND-DC | GND |
| HORIZ DISPLAY | A |
| A TRIGGER HOLDOFF | NORM |

b. Connect a 20 mV standard-amplitude signal from the calibration generator to the CH 1 input via a 50 Ω bnc cable.

c. CHECK—Display is 4 divisions (±0.16 division) between the dots.

d. Disconnect test setup.

## 9. Check X Bandwidth

a. Connect the leveled sine-wave generator to the CH 1 input via a 50 Ω bnc cable and 50 Ω bnc termination.

b. Adjust the generator for a horizontal display of 10 divisions at 50 kHz.

c. Without touching the generator amplitude, adjust the generator frequency to 4 MHz.

d. CHECK—Display is at least 7 divisions in length.

e. Disconnect test setup.

For Service Manuals Contact
MAURITRON TECHNICAL SERVICES
8 Cherry Tree Rd, Chinnor
Oxon OX9 4QY
Tel:- 01844-351694 Fax:- 01844-352554
Email:- enquiries@mauritron.co.uk



@

# ADJUSTMENT PROCEDURE

## IMPORTANT—PLEASE READ BEFORE USING THIS PROCEDURE

### Purpose

The purpose of the Adjustment Procedure is to provide a calibration sequence for adjustments—not to provide a troubleshooting guide. See the Troubleshooting Aids portion of the Maintenance section for troubleshooting information.

### Limits and Tolerances

All limits and tolerances given in this procedure are calibration guides and should not be interpreted as instrument specifications unless they are also found in the Specification section of this manual.

Tolerances given are for the instrument under test and do not include test equipment error.

### Step Titles

Where possible, instrument performance is checked before an adjustment is made. Steps containing checks and adjustments are titled Check/Adjust. Those with checks only are titled Check.

### Line Voltage Selection

This procedure is for 115 Vac line, medium range. If a different range is to be used, set the Regulating Range Selector and Line Voltage Selector for the available line voltage (see Operating Voltage under Installation Instructions in Section 2 of this manual).

### Internal Adjustments

Do not preset the internal controls or move the +55 volt supply adjustment as this will typically require complete recalibration of the oscilloscope.

### Display

The most accurate display adjustments are made with a stable, well-focused, low-intensity display. Unless otherwise noted, adjust the Intensity, Astigmatism, Focus, and Trigger Level controls as needed.

### Test Equipment Required

Refer to Table 4-1, at the beginning of this section, for a list of test equipment required, specifications, usage, and recommended types.

**Special Calibration Fixtures.** Special calibration fixtures are used only where they facilitate instrument adjustment. These fixtures are available from Tektronix Inc. Order by part number through your local Tektronix Field Office or representative.

**Calibration Equipment Alternatives and Partial Procedures.** The Adjustment procedure is based on the first item of equipment given as an example. When other equipment is substituted, control settings or calibration setups might need to be altered. If the exact equipment listed is not available, check the Minimum Specification column carefully to see if any other equipment might suffice. Then check the Usage column to see where this item is used. If used for a check that is of little or no importance to your measurement requirements, the item and corresponding step(s) can be deleted.

If the applications for which you will use the 465B do not require the full performance available, the procedure and the equipment list can be shortened accordingly. For example, the basic measurement capabilities of this instrument can be verified by checking and adjusting as needed: vertical deflection factor, horizontal timing accuracy, and the calibrator signal. If any step requires more than a minor readjustment, check Table 4-6 for any possible interactions.

If a Performance Check indicates that only one subsection requires adjustment, each subsection (Vertical, Horizontal, etc.), except the Power Supply, may be adjusted independently. Also, if maintenance has been performed in a subsection, the adjustments for that area may be accomplished without completing the adjustments in other subsections. If any maintenance or adjustments are changed in the Power Supply circuitry, it is advisable to perform a complete adjustment procedure including all subsections.

### Interactions

Table 4-6 shows calibration adjustments and the possible interaction each adjustment might have on other adjustments. The use of Table 4-6 is particularly important if only a partial procedure is performed or if a circuit requires recalibration due to component replacement.

To use this table, find the adjustment made in the column at the left of the table. Then move to the right across that row until you come to a darkened square. From

Table 4-6

ADJUSTMENT INTERACTIONS

| ADJUSTMENT MADE ↓ / INTERACTION → | +55 V SUPPLY | TRACE ROTATION | Y-AXIS ALIGNMENT | GEOMETRY | CH 1 VAR BAL | CH 2 VAR BAL | INVERT BAL | CH 1 POSITION CENTERING | CH 2 POSITION CENTERING | CH 1 GAIN | CH 2 GAIN | VERT OUT GAIN | SWP START AND A SWP CAL | X1 HORIZONTAL GAIN | X10 HORIZONTAL GAIN | B SWP CAL | HIGH SPEED MAG TIMING (A AND B) | TRIGGERING SENSITIVITY (A AND B) | SLOPE CENTERING (A AND B) | TRIG LEVEL CENTERING (A AND B) | NORM TRIG DC BALANCE | CH 1 TRIG DC BAL | CH 2 TRIG DC BAL | TRIGGER VIEW CENTERING | TRIGGER VIEW GAIN | X GAIN | CRT GRID BIAS | CRT |
|---|---|---|---|---|---|---|---|---|---|---|---|---|---|---|---|---|---|---|---|---|---|---|---|---|---|---|---|---|
| +55 V SUPPLY | ■ | ■ | ■ | ■ | ■ | ■ | ■ | ■ | ■ | ■ | ■ | ■ | ■ | ■ | ■ | ■ | ■ | ■ | ■ | ■ | ■ | ■ | ■ | ■ | ■ | ■ | ■ | |
| TRACE ROTATION | | ■ | ■ | ■ | | | | | | | | | | | | | | | | | | | | | | | | |
| Y-AXIS ALIGNMENT | | ■ | | ■ | | | | | | | | | | | | | | | | | | | | | | | | |
| GEOMETRY | | | ■ | ■ | | | | | | | | | | | | | | | | | | | | | | | | |
| CH 1 VAR BAL | | | | | ■ | | | ■ | | | | | | | | | | | | | ■ | ■ | | | | | | |
| CH 2 VAR BAL | | | | | | ■ | | | ■ | | | | | | | | | | | | ■ | | ■ | | | | | |
| INVERT BAL | | | | | | | ■ | | ■ | | | | | | | | | | | | ■ | | ■ | | | | | |
| CH 1 POSITION CENTERING | | | | | | | | ■ | | | | | | | | | | | | | ■ | | | | | | | |
| CH 2 POSITION CENTERING | | | | | | | | | ■ | | | | | | | | | | | | ■ | | | | | | | |
| CH 1 GAIN | | | | | | | | | | ■ | | | | | | | | ■ | | | | | | | | | | |
| CH 2 GAIN | | | | | | | | | | | ■ | | | | | | | ■ | | | | | | | | | | |
| VERT OUT GAIN | | | | | | | | | | ■ | ■ | ■ | | | | | | | | | | | | | ■ | | | |
| SWP START AND A SWP CAL | | | | | | | | | | | | | ■ | ■ | ■ | ■ | ■ | | | | | | | | | | | |
| X1 HORIZONTAL GAIN | | | | | | | | | | | | | ■ | ■ | ■ | ■ | ■ | | | | | | | | | ■ | | |
| X10 HORIZONTAL GAIN | | | | | | | | | | | | | | | ■ | | ■ | | | | | | | | | | | |
| B SWP CAL | | | | | | | | | | | | | | | | ■ | ■ | | | | | | | | | | | |
| HIGH SPEED MAG TIMING (A AND B) | | | | | | | | | | | | | | | | | ■ | | | | | | | | | | | |
| TRIGGERING SENSITIVITY (A AND B) | | | | | | | | | | | | | | | | | | ■ | ■ | ■ | | | | | | | | |
| SLOPE CENTERING (A AND B) | | | | | | | | | | | | | | | | | | ■ | ■ | ■ | | | | | | | | |
| TRIG LEVEL CENTERING (A AND B) | | | | | | | | | | | | | | | | | | ■ | ■ | ■ | | | | ■ | | | | |
| NORM TRIG DC BALANCE | | | | | | | | | | | | | | | | | | | | | ■ | | | | | | | |
| CH 1 TRIG DC BAL | | | | | | | | | | | | | | | | | | | | | | ■ | | | | | | |
| CH 2 TRIG DC BAL | | | | | | | | | | | | | | | | | | | | | | | ■ | | | | | |
| TRIGGER VIEW CENTERING | | | | | | | | | | | | | | | | | | | | | | | | ■ | | | | |
| TRIGGER VIEW GAIN | | | | | | | | | | | | | | | | | | | | | | | | | ■ | | | |
| X GAIN | | | | | | | | | | | | | | | | | | | | | | | | | | ■ | | |
| CRT GRID BIAS | | | | | | | | | | | | | | | | | | | | | | | | | | | ■ | |
| CRT | | ■ | ■ | ■ | | | | ■ | ■ | ■ | ■ | ■ | ■ | ■ | ■ | ■ | ■ | | | | ■ | ■ | ■ | ■ | ■ | ■ | ■ | ■ |

the darkened square move up the column and check the accuracy of the adjustment heading that column. Readjust if necessary.

### Preparation

Connect test equipment and instrument to be calibrated to an appropriate power source. Turn on and allow a 20-minute warmup period before commencing Adjustment Procedure.

## INDEX TO ADJUSTMENT PROCEDURE

**Power Supply**

Page

1. Check/Adjust Power Supply DC Levels, Regulation, and Ripple (R4318) ..... 4-23
2. Check High Voltage Supply ..... 4-24

**Display and Z Axis**

1. Check/Adjust CRT Grid Bias (R4109) ..... 4-25
2. Check/Adjust Trace Alignment (TRACE ROTATION) ..... 4-25
3. Check/Adjust Y-Axis Alignment (R4072) ..... 4-26
4. Check/Adjust Geometry (R4069) ..... 4-26
5. Check/Adjust Z-Axis Compensation (C4217) . 4-26

**Vertical**

1. Check Probe Indicator LED ..... 4-28
2. Check Input Coupling (AC-GND-DC) Switches 4-28
3. Check ALT Mode ..... 4-28
4. Check CHOP Mode ..... 4-28
5. Check BEAM FIND ..... 4-28
6. Check/Adjust CH 1 Var Volts/Div Balance and VAR Indicator (R1484) ..... 4-29
7. Check/Adjust CH 1 Position Centering (R1135) 4-29
8. Check/Adjust CH 2 Var Volts/Div Balance and VAR Indicator (R1884) ..... 4-29
9. Check/Adjust CH 2 Invert Balance (R1975) ... 4-29
10. Check/Adjust CH 2 Position Centering (R1735) ..... 4-29
11. Check CH 2 and CH 1 Gate Current ..... 4-30
12. Check/Adjust Gain (R1482, R2025, R1882) (R1482, R2005, R1882 below SN B030000) ..... 4-30
13. Check CH 1 and CH 2 Var Volts/Div Range .. 4-31
14. Check ADD mode ..... 4-31
15. Check Compression and Expansion ..... 4-31
16. Check/Adjust Low-Frequency Compensation 4-32
17. Check/Adjust CH 1 Volts/Div Compensation 4-34
18. Check/Adjust CH 2 Volts/Div Compensation 4-34
19. Check/Adjust CH 2 and Output High-Frequency Compensation ..... 4-35
20. Check CH 2 Position Effect ..... 4-35
21. Check/Adjust CH 1 High-Frequency Compensation ..... 4-36
22. Check CH 1 Position Effect ..... 4-36
23. Check CH 1 Transient Response ..... 4-36
24. Check CH 2 Transient Response ..... 4-36
25. Check Bandwidth ..... 4-36
26. Check Cascaded Gain and Bandwidth ..... 4-37
27. Check Channel Isolation ..... 4-37
28. Check/Adjust Common-Mode Rejection Ratio (R1882) ..... 4-37
29. Check Bandwidth Limit Operation ..... 4-38
30. Check/Adjust Trigger View Centering and Gain (R7526, R7439) ..... 4-38
31. Check/Adjust Trigger View Low-Frequency Compensation (C7505, C7506) ..... 4-38
32. Check/Adjust Trigger View High-Frequency Compensation (C7425, C7529, R7423) ..... 4-39
33. Check/Adjust Zero Trigger View Delay (R6011, R6152) ..... 4-39

**Triggers**

1. Check/Adjust A Trigger Sensitivity and TRIG LED (R7246) ..... 4-39
2. Check/Adjust B Trigger Sensitivity (R7045) ... 4-41

3. Check/Adjust B Trigger Slope Center and Level (R7042, R7026) ..... 4-42

4. Check/Adjust A Trigger Slope Center and Level (R7242, R7224) ..... 4-42

5. Check/Adjust A Trigger DC Levels (R1202, R1126, R1835) ..... 4-43

6. Check B Trigger DC Levels ..... 4-43

7. Check B Internal 10 MHz Triggering ..... 4-43

8. Check A Internal 10 MHz Triggering ..... 4-44

9. Check A External 10 MHz Triggering ..... 4-44

10. Check B External 10 MHz Triggering ..... 4-45

11. Check B and A External 100 MHz Triggering 4-45

12. Check A Internal 100 MHz Triggering ..... 4-46

13. Check B Internal 100 MHz Triggering ..... 4-46

14. Check A and B High-Frequency Reject Triggering ..... 4-47

15. Check Single Sweep ..... 4-47

16. Check 60 Hz Internal Triggering ..... 4-48

17. Check 60 Hz External Triggering ..... 4-49

18. Check A and B External Trigger Level Ranges 4-49

19. Check Line Triggers ..... 4-50

20. Check NORM A Trigger Mode ..... 4-50

21. Check AUTO Recovery Time ..... 4-51

**Horizontal**

1. Check/Adjust Sweep Start and A Sweep Calibration (R4570, R6053) ..... 4-53

2. Check Delay or Differential Time Linearity ... 4-53

3. Check/Adjust Horizontal Amplifier Gain (R4373, R4274) ..... 4-53

4. Check Sweep Linearity ..... 4-54

5. Check/Adjust R4253 Magnifier Centering (SN B011250—up) and R4275 Registration ... 4-54

6. Check/Adjust B Sweep Calibration (R6052) .. 4-54

7. Check A Sweep Length ..... 4-54

8. Check Var Time/Division ..... 4-54

9. Check Horizontal Position Range ..... 4-55

10. Check/Adjust A 10 μs Timing (C6002) ..... 4-55

11. Check/Adjust A Sweep High Speed Timing (C6015) ..... 4-55

12. Check/Adjust B Sweep High Speed Timing (C6042) ..... 4-56

13. Check A and B Time/Division Accuracy ..... 4-56

14. Check/Adjust High Speed Magnified Timing (C4246, C4247) ..... 4-56

15. Check A and B Magnified Timing Accuracy . 4-57

16. Check Delay or Differential Time Accuracy .. 4-58

17. Check Delay or Differential Time Jitter ..... 4-58

18. Check/Adjust X Gain (R4381) ..... 4-58

19. Check X-Y Phasing and Bandwidth ..... 4-59

20. Check B Ends A ..... 4-59

21. Check A Trigger Holdoff ..... 4-59

**Gates, Calibrator and Ext Z Axis**

1. Check A and B +Gates ..... 4-61

2. Check/Adjust Calibrator DC Level (R4293) ... 4-61

3. Check External Z Axis ..... 4-62

# POWER SUPPLY

**Equipment Required**

1. Digital Voltmeter
2. DC Voltmeter
3. Test Oscilloscope
4. Autotransformer
5. 3-Inch Slotted Screwdriver

*See* ADJUSTMENT LOCATIONS 1 *in the Diagrams section for adjustments and test points (TP).*

*NOTE*

*After performing the following control settings, connect the instrument to a power source through a Variable Autotransformer. Set the Autotransformer to 115 V before turning the instrument on.*

## 465B Control Settings

**Power Controls**

| | |
|---|---|
| Regulating Range Selector | Medium |
| Line Voltage Selector | 115 V |
| POWER | ON |

**CRT Controls**

| | |
|---|---|
| INTENSITY | As desired |
| FOCUS | Best focused display |
| SCALE ILLUM | As desired |

**Vertical Controls**
**(both Channels if applicable)**

| | |
|---|---|
| VOLTS/DIV | 5 mV |
| VAR | Calibrated detent |
| POSITION | Midrange |
| AC-GND-DC | GND |
| VERT MODE | CH 1 |
| INVERT | Normal (button out) |
| 20 MHz BW LIMIT | Full bandwidth (button out) |

**Triggering Controls**
**(both A and B if applicable)**

| | |
|---|---|
| LEVEL | As needed for a stable display |
| SLOPE | + |
| COUPLING | AC |
| SOURCE | NORM |
| TRIG MODE | AUTO |

**Sweep Controls**

| | |
|---|---|
| HORIZ DISPLAY | A |
| DELAY TIME POSITION | Fully counterclockwise |
| A TIME/DIV | 1 ms |
| B TIME/DIV | 1 ms |
| VAR TIME/DIV | Calibrated detent |
| X10 MAG | Off (button out) |
| POSITION (Horizontal) | Midrange |
| A TRIGGER HOLDOFF | NORM |

## 1. Check/Adjust Power Supply DC Levels, Regulation, and Ripple (R4318)

*NOTE*

*Review the information at the beginning of the Adjustment Procedure before starting the procedure.*

a. Connect the digital voltmeter common lead to chassis ground and the + lead to the test point given in Table 4-7. Voltage to be within the given limits.

Table 4-7

LOW VOLTAGE POWER SUPPLY LIMITS

| Power Supply | Test Point | Reading | Tolerance |
|---|---|---|---|
| +55 V | TP4338 | +54.62 to +55.39 | ±0.7% |
| +15 V | TP4339 | +14.75 to +15.26 | ±1.7% |
| +5 V | TP4337 | +4.92 to +5.09 | ±1.7% |
| −8 V | TP4439 | −7.86 to −8.14 | ±1.7% |
| +110 V | TP4340 | +106.7 to +113.3 | ±3.0% |

*NOTE*

*If the adjustment in step 1, part b. is made, the oscilloscope will require complete recalibration.*

b. Connect the digital voltmeter common lead to chassis ground and + lead to TP4338. ADJUST—+55 volt supply (R4318) for +55 volts. Recheck all supplies according to Table 4-7.

c. Connect the test oscilloscope to the indicated test point and check the ripple amplitude according to Table 4-8 while varying the line voltage between 104 V and 126 V. For improved resolution when measuring ripple amplitude, use a 1X probe and cascaded gain on the test oscilloscope.

Table 4-8

TYPICAL LOW VOLTAGE POWER SUPPLY RIPPLE

| Power Supply | Test Point | Typical Ripple (Peak-to-Peak) |
|---|---|---|
| +55 V | TP4338 | 4 mV |
| +15 V | TP4339 | 2 mV |
| +5 V | TP4337 | 2 mV |
| −8 V | TP4439 | 2 mV |
| +110 V | TP4340 | 20 mV |

d. Return line voltage to 115 V.

## 2. Check High Voltage Supply

a. Connect the dc voltmeter common lead to chassis ground and the + lead to TP4129 on the interface board. (TP4129 is accessible through a hole in the high voltage cover.)

b. CHECK—High Voltage supply for −2450 V ±2.2% (−2396 V to −2504 V).

c. Disconnect the dc voltmeter.

# DISPLAY AND Z AXIS

**Equipment Required**

1. DC Voltmeter
2. Test Oscilloscope
3. Time-mark Generator
4. 50 Ω Bnc Cable
5. 50 Ω Bnc Termination
6. 10X Probe
7. 3-inch Slotted Screwdriver
8. Low-capacitance Slotted Screwdriver

*See* **ADJUSTMENT LOCATIONS 1** *in the Diagrams section for adjustments and test points (TP).*

## 465B Control Settings

**Power Controls**

| | |
|---|---|
| Regulating Range Selector | Medium |
| Line Voltage Selector | 115 V |
| POWER | ON |

**CRT Controls**

| | |
|---|---|
| INTENSITY | As desired |
| FOCUS | Best focused display |
| SCALE ILLUM | Fully counterclockwise |

**Vertical Controls (both Channels if applicable)**

| | |
|---|---|
| VOLTS/DIV | 5 mV |
| VAR | Calibrated detent |
| POSITION | Midrange |
| AC-GND-DC | GND |
| VERT MODE | CH 1 |
| INVERT | Normal (button out) |
| 20 MHz BW LIMIT | Full bandwidth (button out) |

**Triggering Controls (both A and B if applicable)**

| | |
|---|---|
| LEVEL | As needed for a stable display |
| SLOPE | + |
| COUPLING | AC |
| SOURCE | NORM |
| TRIG MODE | AUTO |

**Sweep Controls**

| | |
|---|---|
| HORIZ DISPLAY | A |
| DELAY TIME POSITION | Fully Counterclockwise |
| A TIME/DIV | X-Y |
| VAR TIME/DIV | Calibrated detent |
| X10 MAG | Off (button out) |
| POSITION (Horizontal) | Midrange |
| A TRIGGER HOLDOFF | NORM |

### 1. Check/Adjust CRT Grid Bias (R4109)

a. Connect the digital voltmeter common lead to chassis ground and the + lead to TP4217. (TP4217 is accessible through a hole in the high voltage cover.)

b. Set the INTENSITY control for +20 V on the digital voltmeter.

c. CHECK—Display for a well defined, low intensity dot. Use FOCUS and ASTIG controls as needed.

d. ADJUST—CRT Grid Bias (R4109) for a visible dot. then back off control until the dot just disappears.

### 2. Check/Adjust Trace Alignment (TRACE ROTATION)

a. Set:

| | |
|---|---|
| A TIME/DIV | 0.5 ms |
| INTENSITY | As desired |
| SCALE ILLUM | As desired |

b. Position the trace to the center horizontal graticule line.

c. CHECK—Trace is parallel with the center horizontal graticule line.

d. ADJUST—TRACE ROTATION (front panel adjustment) to make the trace parallel with the center horizontal graticule line.

### 3. Check/Adjust Y-Axis Alignment (R4072)

a. Connect 1 ms time markers from the time-mark generator to the CH 1 input via a 50 Ω bnc cable and a 50 Ω bnc termination.

b. Set:

| | |
|---|---|
| CH 1 AC-GND-DC | DC |
| CH 1 VOLTS/DIV | 0.1 V |

c. Adjust VAR TIME/DIV control for exactly 1 time marker/major division. (Time markers should fill the screen vertically. If not, reduce the VOLTS/DIV switch setting.)

d. CHECK—Display for 0.1 division tilt or less, when compared to the center vertical graticule line.

e. ADJUST—Y-Axis Alignment (R4072) to align to center time marker with the center vertical graticule line.

f. INTERACTION—TRACE ROTATION.

### 4. Check/Adjust Geometry (R4069)

a. CHECK—Display for 0.1 division or less, vertical curvature of the markers across the graticule area. (Readjust A VAR TIME/DIV as needed to maintain exactly 1 marker per division.)

b. ADJUST—Geometry (R4069) for minimum curvature of the markers across the graticule area.

c. INTERACTION—Y-Axis Alignment.

d. Disconnect the test setup.

e. Return A VAR TIME/DIV to detent.

### 5. Check/Adjust Z-Axis Compensation (C4217)

a. Set the A TIME/DIV switch to 0.05 μs.

b. Connect the 10X probe from the test oscilloscope to TP4217.

c. Adjust the 465B INTENSITY control for a 15 V display on the test oscilloscope.

d. CHECK—Test oscilloscope display for optimum square corner on the unblanking gate (with minimum ringing).

e. ADJUST—Z-Axis Compensation (C4217), with a low-capacitance screwdriver, for the best square corner on the unblanking pulse viewed on the test oscilloscope.

f. Disconnect the test setup.

g. CHECK—Display for uniform intensity across the graticule area (especially the first 2 divisions of the trace).

h. READJUST—C4217, if necessary.

# VERTICAL

**Equipment Required**

1. Calibration Generator
2. Test Oscilloscope (only if gain requires complete recalibration
3. Leveled Sine Wave Generator
4. Two 10X Probes (one should have Scale-factor Switching, however an 11 kΩ resistor may be substituted in Step 1, part a).
5. 50 Ω Bnc Cable (2 required)
6. Dual-input Coupler
7. 2X or 5X Bnc Attenuator
8. 10X Bnc Attenuator (2 required)
9. 50 Ω Bnc Termination (2 required)
10. Low-capacitance Screwdriver
11. 3-inch Slotted Screwdriver
12. Bnc-to-probe tip Adapter
13. Bnc-female-to-coaxial-cable-connector Adapter.

*See* **ADJUSTMENT LOCATIONS 2** *and* **ADJUSTMENT LOCATIONS 3** *in the Diagrams section for adjustments and test points (TP).*

**465B Control Settings**

| | |
|---|---|
| POWER | ON |

**Display**

| | |
|---|---|
| INTENSITY | As desired |
| FOCUS | For optimum definition |
| SCALE ILLUM | As desired |
| ASTIG | Best defined trace |

**Vertical (CH 1 and CH 2)**

| | |
|---|---|
| VERT MODE | CH 1 |
| POSITION | Midrange |
| VOLTS/DIV | 5 mV |
| VAR VOLTS/DIV | Calibrated detent |
| AC-GND-DC | DC |
| INVERT | Normal (button out) |
| 20 MHz BW LIMIT | Full bandwidth (button out) |

**Trigger (A and B)**

| | |
|---|---|
| COUPLING | AC |
| LEVEL | As needed for stable display |
| SLOPE | + |
| A TRIGGER SOURCE | NORM |
| B TRIGGER SOURCE | STARTS AFTER DELAY |
| TRIG MODE | AUTO |
| A TRIGGER HOLDOFF | NORM |

**Sweep (A and B)**

| | |
|---|---|
| HORIZ DISPLAY | A |
| A TIME/DIV | 1 ms |
| B TIME/DIV | 1 ms |
| VAR TIME/DIV | Calibrated detent |
| DELAY TIME POSITION | Fully counterclockwise |
| X10 MAG | Off (button out) |
| POSITION (Horizontal) | Midrange |

## 1. Check Probe Indicator LED

a. Connect a 10X probe with a Scale-factor Switching connector to CH 1 input (if no Scale-factor Switching probe is available, an 11 kΩ resistor may be used. Connect the resistor between ground and the metal coding ring on the input connector).

b. CHECK—5 mV LED is extinguished and 50 mV LED is illuminated.

c. Set VERT MODE switches to display CH 2 and move probe to CH 2 input.

d. CHECK—5 mV LED is extinguished and 50 mV LED is illuminated.

e. Remove 10X probe.

## 2. Check Input Coupling (AC-GND-DC) Switches

a. Connect output of calibration generator to CH 2 input via 50 Ω cable. Set the generator for 20 mV standard-amplitude output.

b. Position bottom of display to center horizontal graticule line and set CH 2 AC-GND-DC switch to GND.

c. CHECK—No vertical deflection; trace is at center horizontal graticule line.

d. Set CH 2 AC-GND-DC switch to AC.

e. CHECK—Display is centered about center horizontal graticule line.

f. Set VERT MODE switches to display CH 1 and move test signal to CH 1.

g. Position bottom of display to center horizontal graticule line.

h. Set CH 1 AC-GND-DC switch to GND.

i. CHECK—No vertical deflection; trace is at center horizontal graticule line.

j. Set CH 1 AC-GND-DC switch to AC.

k. CHECK—Display is centered about center horizontal graticule line.

l. Disconnect square-wave signal.

## 3. Check ALT Mode

Set:

| | |
|---|---|
| VERT MODE | CH 1, CH 2, and ALT OUT |
| A TRIGGER LEVEL | Fully clockwise |

b. Position traces about 2 divisions apart.

c. CHECK—Sweeps alternate for all A TIME/DIV settings except X-Y.

## 4. Check CHOP Mode

a. Set:

| | |
|---|---|
| A TIME/DIV | 0.5 μs |
| VERT MODE | CH1, CH 2, and CHOP |
| AC-GND-DC (both) | GND |
| A TRIGGER COUPLING | HF REJ |
| A TRIGGER LEVEL | As needed for stable display |

b. Position traces about 4 divisions apart and set A TRIGGER LEVEL control for a stable display.

c. CHECK—Vertical switching transients are completely blanked between horizontal chopped segments.

d. CHECK—Duration of each cycle is approximately 4 divisions.

## 5. Check BEAM FIND

a. Push in BEAM FIND button and hold.

b. CHECK—Trace remains entirely on screen, regardless of the setting of vertical or horizontal POSITION controls.

c. Release BEAM FIND button.

**6. Check/Adjust CH 1 Var Volts/Div Balance And Var Indicator (R1484)**

a. Position trace to center horizontal graticule line.

b. CHECK—CH 1 UNCAL LED is illuminated when VAR control is out of detent.

c. CHECK—Trace shift of 0.2 division or less when rotating VAR control from one extreme to the other.

d. ADJUST—CH 1 Var Bal (R1484) for minimum trace shift while rotating CH 1 VAR control from one extreme to the other.

e. Return CH 1 VAR control to detent position.

**7. Check/Adjust CH 1 Position Centering (R1135)**

a. Set:

| | |
|---|---|
| CH 1 VOLTS/DIV | .2 V |
| CH 1 AC-GND-DC | AC |
| A TIME/DIV | 1 ms |

b. Connect leveled sine-wave generator output to CH 1 input via 50 Ω bnc cable and 50 Ω termination. Set the generator for a vertical display of 2.4 divisions at 50 kHz.

c. Set CH 1 VOLTS/DIV switch to 20 mV without moving the VAR control.

d. CHECK—Top of display positions down to center horizontal graticule line or below, bottom of display positions up to center horizontal graticule line or above.

e. ADJUST—CH 1 Position Center (R1135) so display positions same distance above and below graticule center line.

f. Disconnect generator.

**8. Check/Adjust CH 2 Var Volts/Div Balance and Var Indicator (R1884)**

a. Set VERT MODE switches to display CH 2.

b. CHECK—CH 2 UNCAL LED is illuminated when VAR control is out of detent.

c. CHECK—Trace shift is 0.2 division or less when rotating VAR control from one extreme to the other.

d. ADJUST—CH 2 Var Bal (R1884) for minimum trace shift while rotating CH 2 VAR control from one extreme to the other.

e. Return CH 2 VAR control to detent position.

**9. Check/Adjust CH 2 Invert Balance (R1975)**

a. Set CH 2 AC-GND-DC to GND.

b. Position trace to center horizontal graticule line and push INVERT button in.

c. CHECK—Trace shift is 0.2 division or less when switching from normal to inverted.

d. ADJUST—Invert Bal (R1975) for minimum trace shift.

**10. Check/Adjust CH 2 Position Centering (R1735)**

a. Set:

| | |
|---|---|
| INVERT | Normal (button out) |
| CH 2 VOLTS/DIV | .2 V |
| CH 2 AC-GND-DC | AC |
| A TRIGGER LEVEL | Fully clockwise |

b. Connect leveled sine-wave generator output to CH 2 input via 50 Ω bnc cable and 50 Ω bnc termination. Set the generator for a vertical display of 2.4 divisions at 50 kHz.

c. Set CH 2 VOLTS/DIV switch to 20 mV without moving VAR control.

d. CHECK—Top of display positions down to center horizontal graticule line or below, bottom of display positions up to center horizontal graticule line or above.

e. ADJUST—CH 2 Position Center (R1735) so display positions same distance above and below graticule line.

f. Disconnect generator.



@

## 11. Check CH 2 and CH 1 Gate Current

a. Set:

| | |
|---|---|
| AC-GND-DC (both) | GND |
| VOLTS/DIV (both) | 5 mV |

b. Position trace to graticule center and change AC-GND-DC switch to DC.

c. CHECK—Trace shift is 0.1 division or less, when switching between GND and DC.

d. Set VERT MODE switches to display CH 1. Position trace to graticule center and change AC-GND-DC switch to DC.

e. CHECK—Trace shift is 0.1 division or less, when switching between GND and DC.

f. Set both AC-GND-DC switches to DC.

## 12. Check/Adjust Gain (R1482, R2025, R1882) (R1482, R2005, R1882 below SN B030000)

*NOTE*

*It is not always necessary to do a complete readjustment to meet instrument gain specifications. Use following procedure to determine required adjustments.*

a. Set:

| | |
|---|---|
| VERT MODE | CH 2 |
| CH 2 VOLTS/DIV | 5 mV |
| CH 2 AC-GND-DC | DC |

b. Connect calibration generator standard-amplitude output to CH 2 input via 50 Ω bnc cable. Set the generator for 20 mV output.

c. CHECK—Display is 4 divisions within 3% (4 divisions ±0.12 division).

d. Change CH 2 VOLTS/DIV and calibration generator settings as shown in Table 4-9 and check that deflection accuracy is within 3% for all VOLTS/DIV settings listed.

e. Set VERT MODE Switches to display CH 1 and set the CH 1 AC-GND-DC switch to DC.

f. Move the input signal from the CH 2 input connector to the CH 1 input connector.

g. CHECK—Display is 4 divisions within 3% (4 divisions ±0.12 division).

h. Change CH 1 VOLTS/DIV and calibration generator settings as shown in Table 4-9 and check that deflection accuracy is within 3% for all VOLTS/DIV settings listed.

Table 4-9

VERTICAL DEFLECTION ACCURACY

| Volts/Div Setting | Calibration Generator Amplitude | Deflection in Div For 3% Accuracy | | Reading In Div |
|---|---|---|---|---|
| | | Divisions | Accuracy | |
| 10 mV | 50 mV | 5 | ±0.15 div | 4.85 to 5.15 |
| 20 mV | 0.1 V | 5 | ±0.15 div | 4.85 to 5.15 |
| 50 mV | 0.2 V | 4 | ±0.12 div | 3.88 to 4.12 |
| .1 V | 0.5 V | 5 | ±0.15 div | 4.85 to 5.15 |
| .2 V | 1 V | 5 | ±0.15 div | 4.85 to 5.15 |
| .5 V | 2 V | 4 | ±0.12 div | 3.88 to 4.12 |
| 1 V | 5 V | 5 | ±0.15 div | 4.85 to 5.15 |
| 2 V | 10 V | 5 | ±0.15 div | 4.85 to 5.15 |
| 5 V | 20 V | 4 | ±0.12 div | 3.88 to 4.12 |

i. If both channels check within 3%, no further vertical gain calibration is required. Proceed to step 13. If a check at any setting of the VOLTS/DIV switch falls outside the 3% accuracy limits, a complete gain recalibration is required. Continue with part j of this step.

j. Set CH 1 VOLTS/DIV switch to 5 mV and set the output of the calibration generator to 20 mV.

k. Set the test oscilloscope controls as follows:

| | |
|---|---|
| Vertical Mode | Add |
| Invert | On (button in) |
| Volts/Div (both) | .1 V (with 10X probe) |
| Triggering | Auto (free-running sweep) |
| A Trigger Source | Ext (no trigger applied) |

l. Connect two 10X probes from the test oscilloscope to TP1519 and TP1319 on the 465B Vertical Preamplifier board. Connect the probe ground leads to chassis ground.

m. CHECK—Signal between TP1519 and TP1319 is 400 mV p-p (4 divisions).

n. ADJUST—CH 1 Gain Adjust (R1482) for 400 mV p-p.

*NOTE*

*This is a nominal value for this adjustment. If may be reset to obtain correct CH 1 overall gain.*

o. Remove 10X probes from TP1519 and TP1319.

p. CHECK—Display is 4 divisions within 3% (4 divisions ±0.12 division).

q. ADJUST—Output Gain Adjust R2025 (R2005 below SN B030000) on the Vertical Output board for a 4-division display.

r. Set CH 2 VOLTS/DIV to 5 mV and move the input signal from CH 1 input to CH 2 input. Set the VERT MODE switches to display CH 2.

s. ADJUST—CH 2 Gain Adjust (R1882) for a 4-division display.

t. Repeat parts e thorugh i to recheck the vertical deflection accuracy.

## 13. Check CH 1 and CH 2 Var Volts/Div Range

a. Set VERT MODE switches to display CH 2 and set both VOLTS/DIV switches to 10 mV and amplitude calibrator for 50 mV signal.

b. Rotate CH 2 VAR VOLTS/DIV control fully counterclockwise.

c. CHECK—Display reduces to 2 divisions or less.

d. Move signal to CH 1 input connector and set VERT MODE switches to display CH 1.

e. Rotate CH 1 VAR VOLTS/DIV control fully counterclockwise.

f. CHECK—Display reduces to 2 divisions or less.

g. Return both VAR VOLTS/DIV controls to calibrated detent.

## 14. Check ADD Mode

a. Set:

| | |
|---|---|
| VOLTS/DIV (both) | 5 mV |
| VERT MODE | ADD |
| INVERT | Normal (button out) |

b. Connect calibration generator standard-amplitude output to both inputs via 50 Ω cables and dual-input coupler. Set generator output for 10 mV.

c. CHECK—Display of 4 divisions, within 3% (4 divisions ±0.12 division).

## 15. Check Compression and Expansion

a. Set:

| | |
|---|---|
| CH 2 AC-GND-DC | GND |
| VERT MODE | CH 1 |

b. Adjust CH 1 VAR control for a 2 divisions display, centered about center horizontal graticule line.

c. Position top of display to top graticule line.

d. CHECK—Display compression or expansion is 0.1 division or less.

e. Position bottom of display to bottom graticule line.

f. CHECK—Display compression or expansion is 0.1 division or less.

g. Set CH 1 VAR VOLTS/DIV control to calibrated detent.

h. Disconnect generator standard-amplitude output and dual-input coupler.

## 16. Check/Adjust Low-Frequency Compensation

a. Set:

| | |
|---|---|
| A TIME/DIV | 0.2 ms |
| VERT MODE | CH 1 |
| AC-GND-DC (both) | DC |
| VOLTS/DIV (both) | 5 mV |
| A TRIGGER LEVEL | As needed for stable display. |

b. Connect calibration generator fast-rise + output to CH 1 input via a 50 Ω bnc cable, 10X attenuator, and 50 Ω bnc termination.

c. Adjust calibration generator to maintain a 5-division display throughout step 16.

d. CHECK—Display overshoot or rounding is within 3% (5 divisions ±0.15 division) for each A TIME/DIV and generator setting given in Table 4-10.

**Table 4-10**

**MAXIMUM OVERSHOOT OR ROUNDING**

| Calibration Generator Signal | A Time/Div Setting | Maximum Overshoot or Rounding in Div |
|---|---|---|
| 1 kHz | .2 ms | 4.85 to 5.15 |
| 10 kHz | 20 μs | 4.85 to 5.15 |
| 100 kHz | 2 μs | 4.85 to 5.15 |

e. If above checks are within 3%, proceed to step 17; if not, continue with part f.

f. Set:

| | |
|---|---|
| A TIME/DIV | 0.2 ms |
| VERT MODE | CH 1, CH 2, and ALT |
| AC-GND-DC (both) | DC |
| VOLTS/DIV (both) | 5 mV |
| A TRIGGER LEVEL | As needed for stable display |
| A TRIGGER SLOPE | − (minus) |

g. Unplug cable connector from J4387 (Vert Alt Sync pulse) and insert plug into bnc-to-cable-connector adapter. Connect the square-wave output of low-frequency generator to the bnc-to-cable-connector adapter via a 50 Ω bnc cable. Set the generator output frequency to 1 kHz and adjust CH 1 and CH 2 Vertical POSITION controls for a 6-division display. Adjust A TRIGGER LEVEL control for a stable display. Presentation will be a square wave when the CH 1 and CH 2 traces alternate at the generator frequency.

*NOTE*

*As an alternate signal source, use the fast-rise − (minus) output of the calibration generator. Do not terminate the cable and adjust the output amplitude to maximum.*

h. ADJUST—Use the settings and adjustments in Table 4-11 and adjust the Vertical Output for best flat top within ±3%.

**Table 4-11**

**VERTICAL OUTPUT LOW-FREQUENCY COMPENSATION**

| Square-wave Frequency | 465B A Time/Div | Adjustment |
|---|---|---|
| 1 kHz | 0.2 ms | R2448 (R2550)[a] |
| 10 kHz | 20 μs | R2446 (R2540)[a] |
| 100 kHz | 2 μs | R2436 (R2535)[a]<br>R2426 (R2520)[a] |

[a] Below SN B030000.

INTERACTION—Repeat 1 kHz, 10 kHz, and 100 kHz until no further improvement is noted.

i. Unplug cable connector from bnc-to-cable-connector adapter and plug connector back into J4387.

j. Set:

| | |
|---|---|
| A TIME/DIV | 2 μs |
| HORIZ DISPLAY | ALT |

k. CHECK—TRACE SEP control will move the B trace at least ±4 vertical divisions from the A trace when rotating TRACE SEP control to fully clockwise and fully counterclockwise positions (A trace centered).

l. CHECK—B trace moves an equal distance above and below the A trace (≈4 divisions). Below SN B030000; ADJUST—Trace Sep Range Adjust R2035 for ±4 divisions of trace separation when rotating TRACE SEP control to fully clockwise and fully counterclockwise positions.

m. ADJUST—Trace Sep Centering R2117 so that the B trace moves an equal distance above and below the A Trace (≈4 divisions). Below SN B030000; ADJUST Trace Sep Comp adjust R2030 for minimum movement of the A Trace while rotating TRACE SEP control from fully clockwise to fully counterclockwise positions.

n. Set:

| | |
|---|---|
| A TIME/DIV | 0.2 ms |
| VERT MODE | CH 1 |
| AC-GND-DC (both) | DC |
| VOLTS/DIV (both) | 5 mV |
| HORIZ DISPLAY | A |
| A TRIGGER LEVEL | As needed for stable display |
| A TRIGGER SLOPE | + |

o. Connect calibration generator fast-rise + output to CH 1 input connector via 50 Ω bnc cable, 10X attenuator, and 50 Ω termination. Set generator frequency to 1 kHz and adjust amplitude for a 6-division display. Adjust A TRIGGER LEVEL for a stable display.

p. ADJUST—Use the settings and adjustments in Table 4-12 to adjust the CH 1 low-frequency compensation for best flat top within ±3%.

**Table 4-12**

**CH 1 LOW-FREQUENCY COMPENSATION**

| Square-Wave Frequency | 465B A Time/Div | Adjustment |
|---|---|---|
| 1 kHz | 0.2 ms | R1176 |
| 10 kHz | 20 μs | R1185 |
| 100 kHz | 2 μs | R2432 (R2530)[a] and R2426 (R2520)[a] on Vertical Output board if needed. (See Table 4-13.) |

[a] Below SN B030000.

q. Move the input signal from CH 1 input connector to CH 2 input connector and set VERT MODE switches to display CH 2.

r. ADJUST—Use the settings and adjustments in Table 4-13 to adjust the CH 2 low-frequency compensation for best flat top within ±3%.

**Table 4-13**

**CH 2 LOW-FREQUENCY COMPENSATION**

| Square-Wave Frequency | 465B A Time/Div | Adjustment |
|---|---|---|
| 1 kHz | 0.2 ms | R1580 |
| 10 kHz | 20 μs | R1582 |
| 100 kHz | 2 μs | R2432 (R2530)[a] and R2426 (R2520)[a] for best compromise between CH 1 and CH 2. |

[a] Below SN B030000.

s. Disconnect calibration generator fast-rise + output from CH 2 input connector.

## 17. Check/Adjust CH 1 Volts/Div Compensation

*NOTE*

*C13010, in the CH 1 Preamplifier, is set at the factory to give C13010, in the CH 2 Preamplifier, enough range to match CH 2 input capacitance with CH 1 input capacitance. Unless there is a circuit malfunction, the CH 1 C13010 should not need readjustment. When adjusting either C13010, or other adjustments in this section, if the low-capacity screwdriver contains a metal bit, the metal may affect the adjustment. Check adjustment after the screwdriver is remove, and re-adjust as necessary.*

a. Set:

| | |
|---|---|
| VOLTS/DIV (both) | 5 mV (see note below) |
| VERT MODE | CH 1 |
| A TIME/DIV | 0.2 ms (see note below) |
| 20 MHz BW LIMIT | Limited bandwidth (button in) |

*NOTE*

*In steps 17 and 18, all VOLTS/DIV Checks and Adjustments require the use of a 10X probe with Scale-Factor Switching (preferably the probe supplied as a standard accessory with the oscilloscope you are calibrating). If it is necessary to use a 10X probe without Scale-Factor Switching, set the VOLTS/DIV knob to indicate one-tenth of the setting listed (5 mV instead of 50 mV, etc). When adjusting compensation, one adjustment will affect the waveform front corner, and another will affect the flat top. Ignore the front corner when making the flat top adjustment and vice-versa. The A TIME/DIV switch should be set to 1 ms for the flat-top, and to 0.2 ms for front corner checks and adjustments.*

b. Connect a 10X probe to CH 1 input connector (note that the VOLTS/DIV Scale-Factor LED will now indicate 50 mV).

c. Connect calibration generator high-amplitude output to tip of the 10X probe via a 2X, 5X, or 10X bnc attenuator (depending on generator amplitude) and bnc-to-probe-tip adapter.

d. Set the calibration generator for a 5-division, 1 kHz display; add or remove attenuators or termination as needed to maintain a 5-division display throughout steps 17 and 18.

e. Adjust probe compensation adjustment for best flat-top waveform. Do not re-adjust probe compensation throughout the remainder of steps 18 and 19.

f. Set CH 1 VOLTS/DIV to 0.1 V.

g. CHECK—Compensation for all VOLTS/DIV settings listed in Table 4-14 for display overshoot, rounding, and flat-top, is within 2% (5 divisions ±0.1 division). If compensation setting is within 2%, skip part h; otherwise perform part h.

h. ADJUST—Any adjustment pair (see Table 4-14) as necessary so compensation for all settings of the VOLTS/DIV switch is within 2%.

## 18. Adjust CH 2 Volts/Div Compensation

a. Set:

| | |
|---|---|
| VERT MODE | CH 2 |

b. Move the 10X probe connector from the CH 1 input to the CH 2 input connector.

c. Adjust calibration generator for a 5-division, 1 kHz display; add or remove attenuators or termination as needed to maintain a 5-division display throughout the remainder of this step.

d. CHECK—Display for flat-top waveform within 3% (±0.15 division).

e. ADJUST—C13010 in the CH 2 Preamplifier for best flat-top waveform using a low-capacitance screwdriver.

f. Repeat step 17, parts f through h for CH 2.

g. Disconnect test setup.

Table 4-14

VOLTS/DIV COMPENSATION

| Volts/Div Setting (10X Scale-Factor) | Adjust | |
|---|---|---|
| | Time/Div 1 ms Flat | Time/Div 0.2 ms Corner |
| .1 V | C37 | C36 |
| .2 V | C35 | C34 |
| .5 V | C33 | C32 |
| 1 V | Check | Check |
| 2 V | Check | Check |
| 5 V | C31 | C30 |

*NOTE*

*If the oscilloscope is to be used primarily with a 50 Ω signal source, more accurate reproduction of the waveform front corner may be achieved by calibrating with a 50 Ω system. To accomplish this, substitute a properly terminated 50 Ω cable for the 10X probe while making the front corner adjustments listed in Table 4-14.*

## 19. Check/Adjust CH 2 and Output High-Frequency Compensation

a. Set:

| | |
|---|---|
| VOLTS/DIV (both) | 5 mV |
| A TRIGGER SLOPE | + |
| 20 MHz BW LIMIT | Full bandwidth (button out) |

b. Connect calibration generator fast-rise + (positive-going) output to CH 2 input connector via a 50 Ω bnc cable, 10X bnc attenuator, and 50 Ω termination.

*NOTE*

*Adjustments in steps 19 through 25 interact. Perform all of the checks, but not the adjustments, in these steps before making any adjustments (unless calibration is being performed after repair or replacement of vertical components).*

*If all checks are within the given limits, proceed to step 26.*

*If any of the checks are not within the given limits, perform checks and adjustments in steps 19 through 25, using low-capacitance screwdriver.*

*If still not within the given limits—perform steps 6 through 25.*

c. Adjust calibration generator output for a 5-division, 100 kHz display.

d. Set A TIME/DIV to 0.2 μs.

e. CHECK—Flat-top display aberrations are within 4% (±0.2 division). See Figure 4-1 for typical display.

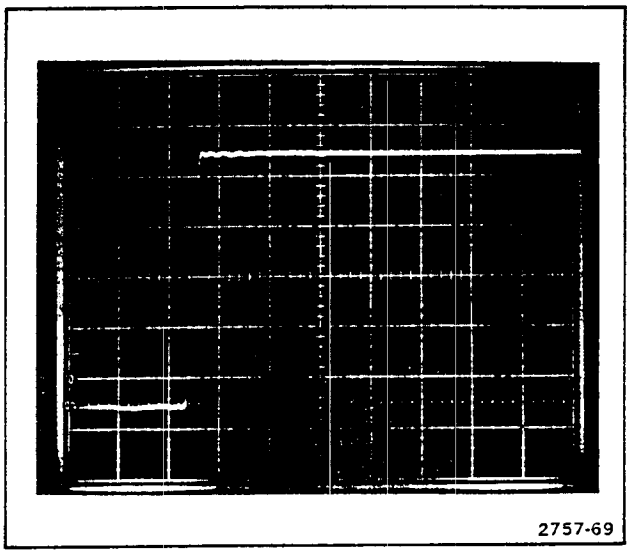


**Figure 4-1. Typical display when high-frequency compensation is correctly adjusted.**

f. ADJUST—R1685, C1690, R1634, C1643, C2315 (C2308 below SN B030000), R2325 (R2312 below SN B030000), R2243 (R2245 below SN B030000), and C2346 (C2350 below SN B030000), for best flat-top waveform with fastest rise time.

g. Connect test setup to fast-rise − (negative-going) output of calibration generator.

h. Set A TRIGGER SLOPE to −.

i. CHECK—Flat-bottom display aberrations are within 6% (±0.3 division).

## 20. Check CH 2 Position Effect

a. Position bottom of display to top graticule line.

b. CHECK—Display aberrations are within 8% (±0.4 division).

c. Set A TRIGGER SLOPE to +.

d. Connect test setup to fast-rise + output of calibration generator.

e. Position top of display to bottom graticule line.

f. CHECK—Display aberrations are within 6% (±0.3 division).

## 21. Check/Adjust CH 1 High-Frequency Compensation

a. Set VERT MODE switches to display CH 1.

b. Move test signal from CH 2 input to CH 1 input connector.

c. CHECK—Flat-top display aberrations are with 4% (±0.2 division). See Figure 4-1 for typical display.

d. ADJUST—R1190, C1192, R1335, and C1342 for best flat-top display.

INTERACTION—It may be necessary to compromise Vertical Output adjustment and CH 2 adjustment for best high-frequency match between CH 1 and CH 2.

e. Connect test setup to fast-rise − output of calibration generator.

f. Set A TRIGGER SLOPE to −.

g. CHECK—Flat-bottom display aberrations are within 6% (±0.3 division).

## 22. Check CH 1 Position Effect

a. Position bottom of display to top graticule line.

b. CHECK—Display aberrations are within 8% (±0.4 division).

c. Set A TRIGGER SLOPE to +.

d. Connect test setup to fast-rise + output of calibration generator.

e. Position top of display to bottom graticule line.

f. CHECK—Display aberrations are within 6% (±0.3 division).

## 23. Check CH 1 Transient Response

a. Verify that A TRIGGER SLOPE is set to + and that the calibration generator fast-rise + output is connected to CH 1 input via a 50 Ω bnc cable, 10X bnc attenuator, and 50 Ω bnc termination.

b. Adjust generator and add or remove attenuators as necessary to maintain a 5-division display throughout the checks of the 5 mV, 10 mV, 20 mV, and 50 mV positions of CH 1 VOLTS/DIV switch.

c. CHECK—Display flat-top and aberrations are within 4% (±0.2 division) for each position of the VOLTS/DIV switch given in part b.

## 24. Check CH 2 Transient Response

a. Set VERT MODE switches to display CH 2.

b. Move test setup to CH 2 input connector.

c. Adjust generator and add or remove attenuators as necessary to maintain a 5-division display throughout the checks of the 5 mV, 10 mV, 20 mV and 50 mV positions of CH 2 VOLTS/DIV switch.

d. CHECK—Display flat-top and aberrations are within 4% (±0.2 division) for each position of the VOLTS/DIV switch given in part c.

## 25. Check Bandwidth

a. Set:

| | |
|---|---|
| A TIME/DIV | 0.2 ms |
| CH 2 VOLTS/DIV | 5 mV |

b. Connect leveled sine-wave generator reference signal to CH 2 input via a 50 Ω bnc cable, 10X attenuator, and 50 Ω termination.

c. Adjust generator for 5-division display.

d. Set generator for 100 MHz output frequency.

e. CHECK—Display amplitude is 3.5 divisions or more.



@

f. Repeat step 25 parts c, d, and e, for 10 mV through 1 V positions of CH 2 VOLTS/DIV switch.

g. Change VERT MODE switches to display CH 1. Move test setup to CH 1 input.

h. Repeat step 25, parts c, d, and e, for 5 mV through 1 V positions of CH 1 VOLTS DIV switch.

i. Disconnect test setup.

## 26. Check Cascaded Gain and Bandwidth

a. Set:

| | |
|---|---|
| VOLTS/DIV (both) | 5 mV |
| AC-GND-DC (both) | AC |
| VERT MODE | CH 2 |
| A TIME/DIV | 1 ms |

b. Connect CH 1 VERT SIGNAL OUT (on 465B rear panel) to CH 2 input connector via 50 Ω bnc cable and 50 Ω termination.

c. Connect calibration generator standard-amplitude output to CH 1 input connector via 50 Ω bnc cable. Set generator output to 5 mV.

d. CHECK—Display amplitude is 5 divisions or more.

e. Remove test setup from CH 1 input.

f. Connect leveled sine-wave generator reference signal output to CH 1 input via 50 Ω bnc cable, 10X attenuator, and 50 Ω termination.

g. Adjust generator output for a 5-division display.

h. Set generator for 50 MHz output frequency.

i. CHECK—Display amplitude is 3.5 divisions or more.

j. Disconnect test setup.

## 27. Check Channel Isolation

a. Set:

| | |
|---|---|
| CH 2 VOLTS/DIV | 0.2 V |
| VERT MODE | CH 2 |
| CH 1 AC-GND-DC | GND |

b. Connect leveled sine-wave generator output to CH 2 input via 50 Ω bnc cable, and 50 Ω termination.

c. Set generator for 25 MHz and adjust output for a 2-division display.

d. Set:

| | |
|---|---|
| VOLTS/DIV (both) | 20 mV |
| VERT MODE | CH 1 |
| A TRIGGER SOURCE | CH 2 |
| A TRIGGER LEVEL | As needed for a stable display |

e. CHECK—Display amplitude is 0.2 division or less.

f. Move test setup from CH 2 input to CH 1 input connector.

g. Set:

| | |
|---|---|
| CH 1 AC-GND-DC | DC |
| CH 2 AC-GND-DC | GND |
| VERT MODE | CH 2 |
| A TRIGGER SOURCE | CH 1 |
| A TRIGGER LEVEL | As needed for a stable display |

h. CHECK—Display amplitude is 0.2 division or less.

i. Disconnect test setup.

## 28. Check/Adjust Common-Mode Rejection Ratio (R1882)

a. Set:

| | |
|---|---|
| VOLTS/DIV (both) | 20 mV |
| AC-GND-DC (both) | DC |
| A TRIGGER SOURCE | NORM |
| VERT MODE | CH 1 |
| CH 2 INVERT | Inverted (button in) |

b. Connect leveled sine-wave generator output to CH 1 and CH 2 input connectors via 50 Ω bnc cable, 10X attenuator, 50 Ω termination, and dual-input coupler.

c. Set generator frequency to 20 MHz and adjust output for a 6-division display.

d. Set VERT MODE switches for ADD only (press CH 1 VERT MODE to remove CH 1 trace from crt display).

e. CHECK—Display is 0.6 division or less (indicates CMRR of at least 10:1 at 20 MHz).

f. Proceed to part m if the check in part e meets the requirements. If the CMRR is less than 10:1, continue with this procedure.

g. Set VERT MODE switches to display CH 1.

h. Set generator frequency to 50 kHz and adjust output for a 6-division display.

i. Set VERT MODE switches to display ADD only.

j. ADJUST—CH 2 Gain Adjust (R1882) for minimum display (best CMRR).

k. Set generator frequency to 20 MHz.

l. CHECK—Display is 0.6 division or less (indicates CMRR of at least 10:1 at 20 MHz).

m. Press CH 2 INVERT push button to release; disconnect test setup.

## 29. Check Bandwidth Limit Operation

a. Set:

| | |
|---|---|
| 20 MHz BW LIMIT | Limited bandwidth (button in) |
| CH 1 AC-GND-DC | DC |
| VERT MODE | CH1 |

b. Connect leveled sine-wave generator reference signal output to CH 1 input connector via 50 Ω bnc cable and 50 Ω termination.

c. Adjust generator output amplitude for a 6-division display.

d. Increase generator frequency until display is 4.2 divisions.

e. CHECK—Generator output frequency is 16 to 24 MHz.

f. Disconnect test setup.

## 30. Check/Adjust Trigger View Centering and Gain (R7526, R7439)

a. Set:

| | |
|---|---|
| A TRIGGER COUPLING | AC |
| A TRIGGER SOURCE | EXT |
| A TRIGGER LEVEL | 0 |
| A TIME/DIV | 0.2 ms |
| VERT MODE | A TRIG VIEW |

b. Connect the calibration generator standard-amplitude signal to the A External Trigger input connector via a 50 Ω bnc cable. Set the generator for 0.5 V output.

c. CHECK—Display amplitude is 5 divisions ±5% (5 divisions ±0.25 division) and that display will trigger symmetrically within one division of the center horizontal graticule line when the A TRIGGER SLOPE is switched between + and −.

d. ADJUST—Trig View Centering (R7526) to center the display about the center horizontal graticule line.

e. ADJUST—Trig View Gain (R7439) for a 5-division display.

f. INTERACTION—Between Trig View Centering and Trig View Gain adjustments. Repeat both for no visible interaction.

g. Disconnect the calibration generator standard-amplitude signal from the A External Trigger input.

## 31. Check/Adjust Trigger View Low-Frequency Compensation (C7505, C7506)

a. Connect the calibration generator high-amplitude output to the A External Trigger input connector via a 50 Ω bnc cable. (Check generator output to see if termination is required.)

b. Set calibration generator for a 5-division display at 1 kHz.

c. CHECK—Square wave has less than 10% overshoot or rounding (±0.5 division).

d. ADJUST—C7505 for best flat top on square-wave display.

e. Change A TRIGGER SOURCE to EXT/10 and adjust calibration generator output amplitude for a 5-division display.

f. CHECK—Square wave has less than 10% overshoot or rounding (±0.5 division).

g. ADJUST—C7506 for best flat top on square-wave display.

h. Remove bnc cable from high-amplitude output on the calibration generator.

## 32. Check/Adjust Trigger View High-Frequency Compensation (C7425, C7529, and R7423)

a. Set:

| | |
|---|---|
| A TIME/DIV | 0.2 μs |
| A TRIGGER SOURCE | EXT |

b. Connect fast-rise + output from calibration generator to the A External Trigger input connector via a 50 Ω bnc cable and a 50 Ω termination. Set the calibration generator to 100 kHz and adjust output amplitude for a 5-division display.

c. CHECK—Square-wave front corner has less than ±10% aberration (±0.5 division).

d. ADJUST—C7425, R7423, and C7529 for best front corner and square-wave rise time of 5 ns or less.

e. Disconnect calibration generator.

## 33. Check/Adjust Zero Trigger View Delay (R6011 and R6152)

*NOTE*

*For instruments equipped with DM44 Option, access to R6011 and R6152 is through a hole in the DM44 circuit board. See the DM44 Instruction manual, Test Points and Adjustment Location foldout, for the location of these adjustments.*

a. Set:

| | |
|---|---|
| VERT MODE | CH 1 and A TRIG VIEW |
| HORIZ DISPLAY | A |
| A TIME/DIV | 0.02 μs |
| X10 MAG | On (button in) |
| A TRIGGER SOURCE | EXT |
| A TRIGGER COUPLING | AC |
| CH 1 VOLTS/DIV | 0.1 V |

b. Connect output of sine-wave generator via bnc T, two 42-inch (equal length) 50 Ω bnc cables, and 50 Ω terminations; one to the CH 1 input connector, and one to the A External Trigger input connector. Set sine-wave generator frequency to 40 MHz and adjust output for a 6-division A TRIG VIEW display. Adjust CH 1 VAR and VOLTS/DIV to match CH 1 display amplitude to A TRIG VIEW display amplitude.

c. CHECK—Time difference with displays superimposed is ≤0.15 horizontal graticule division.

d. ADJUST—R6011 for zero time difference between CH 1 display and A TRIG VIEW display.

e. Set:

| | |
|---|---|
| HORIZ DISPLAY | B DLY'D |
| A TIME/DIV | 0.2 μs |
| B TIME/DIV | 0.02 μs |

f. CHECK—Time difference with displays superimposed is ≤0.15 horizontal graticule division.

g. ADJUST—R6152 for zero time difference between CH 1 display and A TRIG VIEW display.

h. Disconnect test setup.

# TRIGGERS

**Equipment Required**

1. Leveled Sine-wave Generator
2. Low-frequency Generator
3. Time Mark Generator
4. Calibration Generator
5. 50 Ω Signal Pickoff Unit (Type CT-3)
6. 10X Probe
7. 42-inch Bnc Cable (2 required)
8. Gr-to-bnc-female Adapter
9. Gr-to-bnc-male Adapter
10. 10X Bnc Attenuator
11. 50 Ω BNC Termination (2 required)
12. Dual-input Coupler (2 required)
13. Bnc T Connector
14. 3-inch Slotted Screwdriver

*See* ADJUSTMENT LOCATIONS 2 *and* ADJUSTMENT LOCATIONS 4 *in the Diagrams section for adjustments and test points (TP).*

**465B Control Settings**

| | |
|---|---|
| Regulating Range Selector | Medium |
| Line Voltage Selector | 115 V |
| POWER | ON |

**CRT Controls**

| | |
|---|---|
| INTENSITY | As desired |
| FOCUS | Best focused display |
| SCALE ILLUM | As desired |

**Vertical Controls (both channels if applicable)**

| | |
|---|---|
| VOLTS/DIV | 10 mV |
| VAR | Calibrated detent |
| POSITION | Midrange |
| AC-GND-DC | DC |
| VERT MODE | CH 1 |
| INVERT | Off (button out) |
| 20 MHz BW LIMIT | Full bandwidth (button out) |

**Triggering Controls (both A and B if applicable)**

| | |
|---|---|
| LEVEL | Adjust as needed for a stable display |
| SLOPE | + |
| COUPLING | AC |
| SOURCE | NORM |
| TRIG MODE | AUTO |

**Sweep Controls**

| | |
|---|---|
| HORIZ DISPLAY | A |
| DELAY TIME POSITION | Fully counterclockwise |
| A TIME/DIV | 0.05 μs |
| B TIME/DIV | 0.05 μs |
| VAR TIME/DIV | Calibrated detent |
| X10 MAG | Off (button out) |
| POSITION | Midrange |
| A TRIGGER HOLDOFF | NORM |

**1. Check/Adjust A Trigger Sensitivity and TRIG LED (R7246)**

a. Connect a 10 MHz signal from the leveled sine-wave generator to the A and B External Trigger inputs via a GR-to-bnc-male adapter, CT-3 through output, GR-to-bnc-female adapter, 50 Ω bnc cable, 10X attenuator, 50 Ω termination and dual-input coupler.

b. Connect CT-3 Sig Out 10% signal to CH 1 and CH 2 inputs via a 50 Ω bnc cable, 50 Ω termination and a dual-input coupler.

c. Adjust the leveled sine-wave generator for a 3-division display.

d. Set the CH 1 VOLTS/DIV switch to 0.1 V (0.3-division display).

e. CHECK—Stable display can be obtained by rotating A TRIGGER LEVEL control in both + and − slopes.

f. CHECK—TRIG LED is on when the display is stable.

g. Set CH 1 VOLTS/DIV switch to 5 mV and adjust leveled sine-wave generator for a 2-division display.

h. Set CH 1 VOLTS/DIV switch to 0.1 V (0.1-division display).

i. CHECK—Stable display cannot be obtained by rotating A TRIGGER LEVEL control in both + and − slopes. Return the A TRIGGER SLOPE control to +.

j. If the checks in parts c through i meet the requirements, proceed to step 2. If not, make the following adjustments.

k. Set the CH 1 VOLTS/DIV switch to 10 mV and adjust the leveled sine-wave generator for a 2.5-division display.

l. Set the CH 1 VOLTS/DIV switch to 0.1 V (0.25-division display).

m. ADJUST—A Trigger Sensitivity (R7246) so display can just be triggered by rotating A TRIGGER LEVEL control (A TRIGGER SLOPE in +).

n. Set CH 1 VOLTS/DIV switch to 10 mV and adjust the leveled sine-wave generator for a 2-division display.

o. Set the CH 1 VOLTS/DIV switch to 0.1 V (0.2-division display).

p. CHECK—Stable display cannot be obtained by adjusting the A TRIGGER LEVEL control in + slope only (− slope is generally slightly more sensitive).

q. If a stable display can be obtained, then the trigger is too sensitive. Adjust A Trigger Sensitivity (R7246) slightly so display will just barely not trigger by adjusting the A TRIGGER LEVEL control (in + slope only).

r. Repeat parts k through p until a stable display can be obtained on a 0.25-division display, but not on a 0.2-division display (+ slope only).

q. Repeat checks in parts c through i.

## 2. Check/Adjust B Trigger Sensitivity (R7045)

a. Set:

| | |
|---|---|
| HORIZ DISPLAY | B DLY'D |
| CH 1 VOLTS/DIV | 10 mV |
| A TRIGGER LEVEL | Fully clockwise |
| B TRIGGER LEVEL | As needed for a stable display. |

b. Adjust leveled sine-wave generator for a 3-division display.

c. Set the CH 1 VOLTS/DIV switch to 0.1 V (0.3-division display).

d. CHECK—Stable display can be obtained by rotating B TRIGGER LEVEL control in both + and − slopes.

e. Set CH 1 VOLTS/DIV switch to 5 mV and adjust the sine-wave generator for a 2-division display.

f. Set the CH 1 VOLTS/DIV switch to 0.1 V (0.1-division display).

g. CHECK—Stable display cannot be obtained by rotating the B TRIGGER LEVEL control in either + or − slope. Return B TRIGGER SLOPE control to +.

h. If check results in parts b through g meet requirements, proceed to step 3. If not, make the following adjustments.

i. Set CH 1 VOLTS/DIV switch to 10 mV and adjust leveled sine-wave generator for a 2.5-division display.

j. Set the CH 1 VOLTS/DIV switch to 0.1 V (0.25-division display).

k. ADJUST—B Trigger Sensitivity (R7045) so display can be just triggered by adjusting B TRIGGER LEVEL control. (Adjust with B TRIGGER SLOPE in +).

l. Set the CH 1 VOLTS/DIV switch to 10 mV and adjust the leveled sine-wave generator for a 2-division display.

m. Set the CH 1 VOLTS/DIV switch to 0.1 V (0.2-division display).

n. CHECK—Stable display cannot be obtained by adjusting the B TRIGGER LEVEL control (+ slope only).

o. If stable display can be obtained, then trigger is too sensitive. Adjust B Trigger Sensitivity (R7045), slightly so display will just barely not trigger by adjusting B TRIGGER LEVEL control (+ slope only).

p. Repeat parts i through o until stable display can be obtained on a 0.25 division display but not on a 0.2 division display (+ slope only).

q. Repeat checks in parts c through g.

### 3. Check/Adjust B Trigger Slope Center and Level (R7042, R7026)

a. Set:

| | |
|---|---|
| B TRIGGER SOURCE | STARTS AFTER DELAY |
| TIME/DIV (both) | 10 μs |
| B TRIGGER LEVEL | 0 |
| CH 1 VOLTS/DIV | 10 mV |
| CH 1 AC-GND-DC | GND |

*NOTE*

*The B TRIGGER LEVEL control must remain at 0 throughout this step.*

b. Position the trace to the center horizontal graticule line.

c. Set:

| | |
|---|---|
| CH 1 AC-GND-DC | DC |
| B TRIGGER SOURCE | NORM |

d. Adjust the leveled sine-wave generator for approximately a 4-division display at 50 kHz.

e. Switch the B TRIGGER SLOPE switch between + and −.

f. CHECK—Display begins at about the same vertical point, within 1 division of graticule center, in both + and − slopes.

g. ADJUST—B Slope Center (R7042) for the display to start at the same vertical point on the sine wave in both + and − slopes (not necessarily the center horizontal graticule line). Return B TRIGGER SLOPE to +.

h. ADJUST—B Trig Level (R7026) to move the starting point of the display to the center horizontal graticule line.

i. INTERACTION—B Trig Level (R7026) B Slope Center (R7042), and B Trigger Sensitivity (R7045) will interact. Repeat these adjustments until no improvement is noted.

### 4. Check/Adjust A Trigger Slope Center and Level (R7242, R7224)

a. Set:

| | |
|---|---|
| HORIZ DISPLAY | A |
| A TRIGGER LEVEL | 0 |

*NOTE*

*The A TRIGGER LEVEL control must remain at 0 throughout this step.*

b. Switch the A TRIGGER SLOPE switch between + and −.

c. CHECK—Display begins at about the same vertical point, within 1 division of graticule center, in both + and − slopes.

d. ADJUST—A Slope Center (R7242) for the display to start at the same vertical point on the sine wave in both + and − slopes (not necessarily the graticule center). Return A TRIGGER SLOPE to +.

e. ADJUST—A Trig Level (R7224) to move the starting point of the display to the center horizontal graticule line.

f. INTERACTION—A Trig Level (R7224), A Trigger Sensitivity (R7246), and A Slope Center (R7242) will interact. Repeat these adjustments until no improvement is noted.

## 5. Check/Adjust A Trigger DC Levels (R1202, R1126, R1835)

a. Set the A TRIGGER COUPLING switch to DC.

*NOTE*

*The A TRIGGER LEVEL control must remain at 0 throughout this step.*

b. CHECK—Start of the display is within 1 division of the center horizontal graticule line in both + and − slopes. Return A TRIGGER SLOPE to +.

c. ADJUST—Norm Trig DC Balance (R1202) to move the starting point of the display to the center horizontal graticule line.

d. INTERACTION—A and B Trig Level (R7224 and R7026) interact with Norm Trig DC Balance (R1202). Repeat these adjustments until no improvement is noted.

e. Set the A TRIGGER SOURCE switch to CH 1.

f. CHECK—Start of the display is within 1 division of the center horizontal graticule line in both + and − slopes. Return A TRIGGER SLOPE to +.

g. ADJUST—CH 1 Trig DC Balance (R1126) to move the starting point of the display to the center horizontal graticule line.

h. Set the A TRIGGER SOURCE Switch to CH 2.

i. CHECK—Start of the display is within 1 division of the center horizontal graticule line in both + and − slopes. Return A SLOPE to +.

j. ADJUST—CH 2 Trig DC Balance (R1835) to move the starting point of the display to the center horizontal graticule line.

## 6. Check B Trigger DC Levels

a. Set:

| | |
|---|---|
| HORIZ DISPLAY | B DLY'D |
| A TRIGGER LEVEL | Fully clockwise |
| B TRIGGER LEVEL | 0 |
| B TRIGGER COUPLING | DC |
| B TRIGGER SOURCE | NORM |

*NOTE*

*The B TRIGGER LEVEL control must remain at 0 during this step.*

b. CHECK—Start of the display is within 1 division of the center horizontal graticule line for the following modes:

| B TRIGGER SOURCE |
|---|
| NORM |
| CH 1 |
| CH 2 |

## 7. Check B Internal 10 MHz Triggering

a. Set:

| | |
|---|---|
| TRIGGER COUPLING (both) | AC |
| CH 1 VOLTS/DIV | 10 mV |
| CH 2 VOLTS/DIV | 0.1 V |
| A TIME/DIV | 0.2 μs |
| B TIME/DIV | 0.05 μs |
| TRIGGER SOURCE (both) | NORM |

b. Adjust the leveled sine-wave generator for a 3-division (30 mV) display at 10 MHz.

c. Set the CH 1 VOLTS/DIV switch to 0.1 V (0.3-division display).

d. Adjust the B TRIGGER LEVEL control as needed for a stable display.

e. CHECK—For a stable display, with both + and − slopes for these modes:

| B TRIGGER | |
|---|---|
| SOURCE | COUPLING |
| NORM | AC, DC |
| CH 1 | DC, AC |
| CH 2 | AC, DC |

b. Adjust the leveled sine-wave generator to maintain a 5-division display throughout steps 9 and 10. Adjust the A TRIGGER LEVEL control as needed for a stable display.

c. CHECK—For a stable display, with both + and − slopes fo these modes:

**A TRIGGER COUPLING**

AC, DC

d. Set:

| | |
|---|---|
| CH 1 VOLTS/DIV | 20 mV |
| A TRIGGER COUPLING | LF REJ |

e. Adjust the leveled sine-wave generator for a 5-division (100 mV) display at 10 MHz.

f. Adjust the A TRIGGER LEVEL control as needed for a stable display.

g. CHECK—For a stable display, with both − and − slopes.

h. Set the A TRIGGER COUPLING switch to HF REJ.

i. CHECK—No stable display.

j. Remove the 10X bnc attenuator from the external trigger setup and change the A TRIGGER SOURCE switch to EXT/10.

k. CHECK—No stable display.

l. Set the A TRIGGER COUPLING switch to LF REJ.

m. CHECK—For a stable display, with both + and − slopes.

n. Set:

| | |
|---|---|
| CH 1 VOLTS/DIV | 10 mV |
| A TRIGGER COUPLING | AC |

o. Adjust the leveled sine-wave generator for a 5-division (50 mV) display at 10 MHz (0.5 volt at the external Trigger Input).

p. CHECK—For a stable display, with both + and − slopes for these modes:

**A TRIGGER COUPLING**

AC, DC

## 10. Check B External 10 MHz Triggering

a. Set:

| | |
|---|---|
| HORIZ DISPLAY | B DLY'D |
| A TIME/DIV | 0.2 μs |
| B TIME/DIV | 0.05 μs |

b. Reconnect the 10X bnc attenuator to the external trigger setup.

c. CHECK—For a stable display, with both + and − slopes for these modes:

**B TRIGGERING COUPLING**

AC, DC

d. Set the CH 1 VOLTS/DIV switch to 20 mV.

e. Adjust the leveled sine-wave generator for a 5-division (100 mV) display at 10 MHz.

f. Set the B TRIGGER COUPLING switch to LF REJ and adjust the B TRIGGER LEVEL control as needed for a stable display.

g. CHECK—For a stable display, with both + and − slopes.

h. Set the B TRIGGER COUPLING switch to HF REJ.

i. CHECK—No stable display.

## 11. Check B and A External 100 MHz Triggering

a. Set:

| | |
|---|---|
| TRIGGER COUPLING (both) | AC |
| TRIGGER SOURCE (both) | EXT |
| CH 1 VOLTS/DIV | 50 mV |

f. Set:

| | |
|---|---|
| CH 1 VOLTS/DIV | 10 mV |
| B TRIGGER COUPLING | LF REJ |

g. Adjust the leveled sine-wave generator for a 5-division (50 mV) display at 10 MHz.

h. Set the CH 1 VOLTS/DIV switch to .1 V (0.5-division display).

i. Adjust B TRIGGER LEVEL control as needed for a stable display.

j. CHECK—For a stable display, with both + and − slopes for these modes:

**B TRIGGER SOURCE**

CH 2
CH 1
NORM

k. Set the B TRIGGER COUPLING switch to HF REJ.

l. CHECK—No stable display for these modes:

**B TRIGGER SOURCE**

NORM
CH 1
CH 2

## 8. Check A Internal 10 MHz Triggering

a. Set:

| | |
|---|---|
| HORIZ DISPLAY | A |
| A TIME/DIV | 0.05 μs |
| A TRIGGER LEVEL | As needed for a stable display |
| CH 1 VOLTS/DIV | 10 mV |

b. Adjust the leveled sine-wave generator for a 3-division (30 mV) display at 10 MHz.

c. Set the CH 1 VOLTS/DIV switch to .1 V (0.3-division display).

d. Adjust the A TRIGGER LEVEL control as needed for a stable display.

e. CHECK—For a stable display, with both + and − slopes for these modes:

**A TRIGGER**

| SOURCE | COUPLING |
|---|---|
| NORM | AC, DC |
| CH 1 | DC, AC |
| CH 2 | AC, DC |

f. Set:

| | |
|---|---|
| CH 1 VOLTS/DIV | 10 mV |
| A TRIGGER COUPLING | LF REJ |

g. Adjust the leveled sine-wave generator for a 5-division (50 mV) display at 10 MHz.

h. Set the CH 1 VOLTS/DIV switch to .1 V (0.5-division display).

i. Adjust the A TRIGGER LEVEL control as needed for a stable display.

j. CHECK—For a stable display, with both + and − slopes for these modes:

**A TRIGGER SOURCE**

CH 2
CH 1
NORM

k. Set the A TRIGGER COUPLING switch to HF REJ.

l. CHECK—No stable display for these modes:

**A TRIGGER SOURCE**

NORM
CH 1
CH 2

## 9. Check A External 10 MHz Triggering

a. Set:

| | |
|---|---|
| VOLTS/DIV (both) | 10 mV |
| TRIGGER COUPLING (both) | AC |
| TRIGGER SOURCE (both) | EXT |

c. Adjust the leveled sine-wave generator for a 3-division (150 mV) display at 10 MHz; then change the generator frequency to 100 MHz. Do not readjust signal amplitude.

d. Press the X10 MAG push button in and use the A and B TRIGGER LEVEL controls as needed for a stable display.

e. CHECK—For a stable display, with 0.1 division or less jitter, with + and − slopes for these modes:

**B TRIGGER COUPLING**

AC, DC

f. Adjust the leveled sine-wave generator for a 6-division (300 mV) display at 10 MHz; then change the generator frequency to 100 MHz. Do not readjust the signal amplitude.

g. Set the B TRIGGER COUPLING switch to LF REJ and use the A and B TRIGGER LEVEL controls as needed.

h. CHECK—For a stable display, with 0.1 division or less jitter, with both + and − slopes.

i. Set the B TRIGGER COUPLING switch to HF REJ.

j. CHECK—No stable display.

k. Set:

| | |
|---|---|
| HORIZ DISPLAY | A |
| A TIME/DIV | 0.05 μs |
| A TRIGGER SOURCE | LF REJ |
| A TRIGGER SOURCE | EXT |
| A TRIGGER LEVEL | As needed. |

l. CHECK—For a stable display, with 0.1 division or less jitter, with both + and − slopes.

m. Set the A TRIGGER COUPLING switch to HF REJ.

n. CHECK—No stable display.

o. Set the A TRIGGER COUPLING switch to AC.

p. Adjust the leveled sine-wave generator for a 3-division (150 mV) display at 10 MHz; then change the generator frequency to 100 MHz. Do not readjust the signal amplitude.

q. Use the A TRIGGER LEVEL control as needed for a stable display.

r. CHECK—For a stable display, with 0.1 division or less jitter, with both + and − slopes:

**A TRIGGER COUPLING**

AC, DC

t. Remove the 10X bnc attenuator from the external trigger setup and change the A TRIGGER SOURCE switch to EXT/10.

u. Use the A TRIGGER LEVEL control as needed for a stable display.

v. CHECK—For a stable display, with 0.1 division or less jitter, with both + and − slopes for these modes:

**A TRIGGER COUPLING**

DC, AC

w. Adjust the leveled sine-wave generator for a 6-division (300 mV) display at 10 MHz; then change the generator frequency to 100 MHz. Do not readjust the signal amplitude.

x. Set the A TRIGGER COUPLING switch to LF REJ and use the A TRIGGER LEVEL control as needed for a stable display.

y. CHECK—For a stable display, with 0.1 division or less jitter, with both + and − slopes.

z. Set the A TRIGGER COUPLING switch to HF REJ.

aa. CHECK—No stable display.

## 12. CHECK A Internal 100 MHz Triggering

a. Set:

| | |
|---|---|
| VOLTS/DIV (both) | 50 mV |
| TRIGGER SOURCE (both) | NORM |
| TRIGGER COUPLING (both) | AC |



@

b. Reconnect the 10X attenuator to the external trigger setup. Adjust the leveled sine-wave generator for a 1.5-division display at 100 MHz.

c. CHECK—For a stable display, with 0.1 division or less jitter, with + and − slopes for these modes:

**A TRIGGER**

| SOURCE | COUPLING |
|---|---|
| NORM | AC, LF REJ, DC |
| CH 1 | DC, LF REJ, AC |
| CH 2 | AC, LF REJ, DC |

d. Set the A TRIGGER COUPLING switch to HF REJ.

e. CHECK—No stable display.

## 13. Check B Internal 100 MHz Triggering

a. Set:

| | |
|---|---|
| HORIZ DISPLAY | B DLY'd |
| A TIME/DIV | 0.2 μs |
| B TIME/DIV | 0.05 μs |
| A TRIGGER COUPLING | DC |
| A TRIGGER SOURCE | NORM |

b. CHECK—For a stable display, with 0.1 division or less jitter, with + and − slopes, for these modes:

**B TRIGGER**

| SOURCE | COUPLING |
|---|---|
| NORM | AC, LF REJ, DC |
| CH 1 | DC, LF REJ, AC |
| CH 2 | AC, LF REJ, DC |

*NOTE*

*It may be necessary to adjust both A and B TRIGGER LEVEL controls to obtain the most stable display at higher frequencies in B sweep.*

c. Set the B TRIGGER COUPLING switch to HF REJ.

d. CHECK—No stable display.

## 14. Check A and B High Frequency Reject Triggering

a. Set:

| | |
|---|---|
| HORIZ DISPLAY | A |
| TIME/DIV (both) | 10 μs |
| X/10 MAG | Off (button out) |
| TRIGGER COUPLING (both) | HF REJ |
| TRIGGER SOURCE (both) | NORM |
| CH 1 VOLTS/DIV | .1 V |
| CH 2 VOLTS/DIV | 10 mV |
| VERT MODE | CH 2 |

b. Adjust leveled sine-wave generator for a 5-division (50 mV) display at 50 kHz.

c. Set the CH 2 VOLTS/DIV switch to .1 V. Adjust A TRIGGER LEVEL control for stable display.

d. Adjust leveled sine-wave generator for 1 MHz and press the X10 MAG push button in.

e. CHECK—No stable display with the A TRIGGER SOURCE switch in NORM, CH 1, or CH 2.

g. Set:

| | |
|---|---|
| A TRIGGER LEVEL | Fully clockwise |
| HORIZ DISPLAY | B DLY'D |

h. CHECK—No stable display with the B TRIGGER SOURCE switch in NORM, CH 1, or CH 2.

## 15. Check Single Sweep

a. Set:

| | |
|---|---|
| HORIZ DISPLAY | A |
| CH 1 VOLTS/DIV | 50 mV |
| VERT MODE | CH 1 |
| X10 MAG | Off (button out) |

**A TRIGGER**

| | |
|---|---|
| COUPLING | AC |
| SOURCE | NORM |
| LEVEL | 0 |
| SLOPE | + |

b. Adjust the leveled sine-wave generator for a 1-division display at 50 kHz and adjust the A TRIGGER LEVEL control so the display is just triggered.

c. Set:

| | |
|---|---|
| TIME/DIV (both) | 10 ms |
| CH 1 AC-GND-DC | GND |
| A TRIG MODE | SINGL SWP (push in) |

d. CHECK—READY LED Illuminates.

e. Set the CH 1 AC-GND-DC switch to DC.

f. CHECK—A single sweep occurs and the READY LED goes out.

g. Press the SINGLE SWP push button in.

h. CHECK—A single sweep occurs each time the SINGL SWP push button is depressed.

i. Remove the test setup.

## 16. Check 60 Hz Internal Triggering

a. Set:

| | |
|---|---|
| TIME/DIV (both) | 5 ms |
| TRIGGER MODE | NORM |
| CH 1 VOLTS/DIV | 10 mV |

b. Connect the low-frequency generator signal to the CH 1 input via a 50 Ω bnc cable, bnc T and 50 Ω bnc termination. From bnc T, connect a 50 Ω bnc cable and 50 Ω bnc termination to the B External Trigger input.

c. Adjust the low-frequency generator for a 3-division (30 mV) display at 60 Hz.

d. Set the CH 1 VOLTS/DIV switch to .1 V (0.3-division display).

e. CHECK—For a stable display, with both + and − slopes for these modes:

**TRIGGER COUPLING**

AC, DC

f. Set:

| | |
|---|---|
| CH / VOLTS/DIV | 10 mV |
| A TRIGGER COUPLING | HF REJ |

g. Set the low-frequency generator for a 5-division (50 mV) display at 60 Hz.

h. Set the CH 1 VOLTS/DIV switch to 0.1 V (0.5-division display).

i. CHECK—For a stable display, with both + and − slopes.

j. Set the A TRIGGER COUPLING switch to LF REJ.

k. CHECK—No stable display.

l. Set:

| | |
|---|---|
| A TRIG MODE | AUTO |
| A TRIGGER LEVEL | Fully clockwise |
| A TIME/DIV | 10 ms |
| B TIME/DIV | 5 ms |
| B TRIGGER SOURCE | NORM |
| B TRIGGER COUPLING | HF REJ |
| HORIZ DISPLAY | B DLY'D |
| CH 1 VOLTS/DIV | 0.1 V |

m. CHECK—For a stable display, with both − and − slopes.

n. Set the B TRIGGER COUPLING switch to LF REJ.

o. CHECK—No stable display.

p. Set:

| | |
|---|---|
| CH 1 VOLTS/DIV | 10 mV |
| B TRIGGER COUPLING | AC |

q. Set the low-frequency generator for a 3-division (30 mV) display at 60 Hz.

r. Set the CH 1 VOLTS/DIV switch to 0.1 V and use the B TRIGGER LEVEL control as needed for a stable display.

s. CHECK—For a stable display, with both + and − slopes for these modes:

**B TRIGGER COUPLING**

AC, DC

## 17. Check 60 Hz External Triggering

a. Set:

| | |
|---|---|
| B TRIGGER COUPLING | AC |
| CH 1 VOLTS/DIV | 10 mV |

b. Adjust the low-frequency generator for a 5-division (50 mV) display at 60 Hz.

c. Set the B TRIGGER SOURCE switch to EXT.

d. CHECK—For a stable display, with both + and − slopes for these modes:

**B TRIGGER COUPLING**

AC, HF REJ, DC

e. Set the B TRIGGER COUPLING switch to LF REJ.

f. CHECK—No stable display.

g. Move the signal cable from the B External Trigger input to the A External Trigger input.

h. Set:

| | |
|---|---|
| HORIZ DISPLAY | A |
| A TIME/DIV | 5 ms |
| A TRIGGER COUPLING | AC |
| A TRIG MODE | NORM |
| A TRIGGER SOURCE | EXT |
| A TRIGGER LEVEL | As needed |

i. CHECK—For a stable display, with both + and − slopes for these modes:

**A TRIGGER COUPLING**

AC, HF REJ, DC

j. Set the A TRIGGER COUPLING switch to LF REJ.

k. CHECK—No stable display.

## 18. Check A and B External Trigger Level Ranges

a. Set:

| | |
|---|---|
| TRIGGER COUPLING (both) | AC |
| TRIGGER SLOPE (both) | + |
| CH 1 VOLTS/DIV | 1 V |
| HORIZ/DISPLAY | A |
| A TRIG MODE | AUTO |
| A TIME/DIV | 1 ms |

b. Remove the 50 Ω termination and adjust the low-frequency generator for a 4-division (4 V) display at 1 kHz.

c. CHECK—Display is triggered along the positive slope of the waveform as the A TRIGGER LEVEL control is rotated.

d. CHECK—Display is not triggered (free runs) at either extreme of rotation.

e. Set the A TRIGGER SLOPE switch to −.

f. CHECK—Display is triggered along the negative slope of the waveform as the A TRIGGER LEVEL control is rotated.

g. CHECK—Display is not triggered (free runs) at either extreme of rotation.

h. Move the low-frequency generator signal from the A External Trigger input to the B External Trigger input.

i. Set:

| | |
|---|---|
| A TRIGGER LEVEL | Fully counterclockwise |
| HORIZ DISPLAY | B DLY'D |

j. CHECK—Display is triggered along the positive slope of the waveform as the B TRIGGER LEVEL control is rotated.

k. CHECK—Display is not triggered (not visible) at either extreme of rotation.

l. Set the B TRIGGER SLOPE switch to −.

m. CHECK—Display is triggered along the negative slope of the waveform as the B TRIGGER LEVEL control is rotated.

n. CHECK—Display is not triggered (not visible) at either extreme of rotation.

o. Disconnect the test setup.

p. Set:

| | |
|---|---|
| HORIZ DISPLAY | A |
| A TRIGGER SOURCE | EXT/10 |
| CH 1 VOLTS/DIV | 5 V |
| CH 1 VAR | Fully counterclockwise |
| A TRIGGER COUPLING | AC |

q. Connect the calibration generator standard-amplitude output to the CH 1 input via a 50 Ω bnc cable and bnc T. Connect the bnc female connection to A External Trigger input via a 50 Ω bnc cable. Adjust the generator output to 50 volts.

*NOTE*

*The range of the A LEVEL control with the A SOURCE switch in EXT/10 is ±20 volts (40 V peak-to-peak) or greater. The applied signal is 50 V peak-to-peak. Therefore, untriggered operation at both extremes of the A TRIGGER LEVEL control is not required.*

r. CHECK—Display is triggered along the negative slope of the waveform as the A TRIGGER LEVEL control is rotated.

s. Set the A TRIGGER SLOPE switch to +.

t. CHECK—Display is triggered along the positive slope of the waveform as the A TRIGGER LEVEL control is rotated.

u. Disconnect the test setup.

## 19. Check Line Triggers

a. Set:

CH 1 VOLTS/DIV and VAR As required

**A TRIGGER**

| | |
|---|---|
| MODE | AUTO |
| COUPLING | AC |
| SOURCE | LINE |
| SLOPE | + |

b. Connect a 10X probe from the CH 1 input to a line-frequency source.

c. CHECK—For a stable display, starting on the positive-going slope.

d. Set the A TRIGGER SOURCE switch to −.

e. CHECK—For a stable display, starting on the negative-going slope.

f. Disconnect probe from the line-frequency source; then from the 465B.

## 20. Check NORM A Trigger Mode

a. Set:

| | |
|---|---|
| A TIME/DIV | 1 ms |
| CH 1 VOLTS/DIV | .5 V |
| CH 1 VAR | Calibrated detent |

**A TRIGGER**

| | |
|---|---|
| SLOPE | + |
| SOURCE | NORM |
| COUPLING | AC |
| MODE | AUTO |

b. Connect time-mark generator to the CH 1 input via a 50 Ω bnc cable and 50 Ω bnc termination. Adjust generator for 0.1 s time markers.



@

c. CHECK—Display can be triggered by adjusting the A TRIGGER LEVEL control.

d. Set the A TRIG MODE switch to NORM.

e. CHECK—Display is triggered.

f. Set the CH 1 AC-GND-DC switch to GND.

g. CHECK—No display is visible.

**21. Check AUTO Recovery Time**

a. Set:

| | |
|---|---|
| CH 1 AC-GND-DC | DC |
| A TRIG MODE | AUTO |

b. CHECK—Display is triggered.

c. Set the time-mark generator for 0.5 s time markers.

d. CHECK—Display cannot be triggered (free runs).

e. Disconnect the time-mark generator.

*NOTE*

*OSCILLOSCOPES WITH DIGITAL MULTIMETERS ATTACHED, REFER TO THE CALIBRATION SECTION OF THE DIGITAL MULTIMETER MANUAL AT THIS POINT. ON COMPLETION OF THE CALIBRATION SECTION IN THE DM MANUAL RETURN TO THIS MANUAL AND COMPLETE STEPS 18 & 19 IN THE HORIZONTAL SECTION, THEN CONTINUE ON TO THE NEXT SECTION.*

*FOR CALIBRATION OF OSCILLOSCOPES WITHOUT DIGITAL MULTIMETERS, CONTINUE TO HORIZONTAL SECTION OF THIS MANUAL.*

# HORIZONTAL

**Equipment Required**

1. Test Oscilloscope
2. Time-mark Generator
3. 50 Ω Bnc Cable
4. Leveled Sine-wave Generator
5. 50 Ω Bnc Termination
6. 3-Inch Slotted Screwdriver
7. Low-capacitance Slotted Screwdriver
8. Dual-input Coupler

*See* **ADJUSTMENT LOCATIONS 1** *and* **ADJUSTMENT LOCATIONS 5** *in the Diagrams section for adjustments and test points (TP).*

## 465B Control Settings

**Power Controls**

| | |
|---|---|
| Regulating Range Selector | Medium |
| Line Voltage Selector | 115 V |
| POWER | ON |

**CRT Controls**

| | |
|---|---|
| INTENSITY | As desired |
| FOCUS | Best focused display |
| SCALE ILLUM | As desired |
| B INTENSITY | As desired |

**Vertical Controls (both Channels if applicable)**

| | |
|---|---|
| VOLTS/DIV | 0.5 V |
| VAR | Calibrated detent |
| POSITION | Midrange |
| AC-GND-DC | DC |
| VERT MODE | CH 1 |
| INVERT | Off (button out) |
| 20 MHz BW LIMIT | Full bandwidth (button out) |

**Triggering Controls (both A and B if applicable)**

| | |
|---|---|
| LEVEL | As needed for a stable display |
| SLOPE | + |
| COUPLING | AC |
| A SOURCE | EXT |
| B SOURCE | Starts after delay |

**Sweep Controls**

| | |
|---|---|
| HORIZ DISPLAY | ALT |
| DELAY TIME POSITION | 1.00 |
| A TIME/DIV | 1 ms |
| B TIME/DIV | 5 μs |
| VAR TIME/DIV | Calibrated detent |
| X10 MAG | Off (button out) |
| POSITION | Midrange |
| A TRIGGER HOLDOFF | NORM |
| TRACE SEP | As needed for ALT display trace separation. |



@

## 1. Check/Adjust Sweep Start and A Sweep Calibration (R4570, R6053)

a. Connect 1 ms time markers to the CH 1 input from the time-mark generator via a 50 Ω bnc cable and a 50 Ω termination. Connect + Trigger Out from the time-mark generator to the A External Trigger input via a 50 Ω bnc cable and a 50 Ω termination.

b. CHECK—Intensified portion of the sweep begins at the second time marker. (It may be necessary to readjust the INTENSITY and B INTENSITY controls, so that the intensified portion of the sweep is visible.)

c. ADJUST—Sweep Start (R4570) so the intensified portion of the sweep begins at the start of the second time marker and the pulse displayed on B DLY'D trace starts at the beginning of the sweep.

d. Set the DELAY TIME POSITION dial to 9.00.

e. CHECK—Intensified portion of the sweep begins at the tenth time marker.

f. ADJUST—A Sweep Cal (R6053) so the intensified portion of the sweep begins at the start of the tenth time marker and the pulse displayed on B DLY'D trace starts at the beginning of the sweep.

g. INTERACTION—Between Sweep Start and A Sweep Cal adjustments. Repeat both until no further improvement is noted.

## 2. Check Delay or Differential Time Linearity

a. Set the DELAY TIME POSITION dial to position the tenth time marker to the beginning of the sweep.

b. Note the reading on the DELAY TIME POSITION dial.

c. Adjust the DELAY TIME POSITION dial so the ninth time marker is at the beginning of the sweep.

d. CHECK—DELAY TIME POSITION dial for a difference in reading of: 1.00 ±0.01 (0.99 to 1.01), from +15° C to +35° C; 1.00 ±0.03 (0.99 to 1.03), from −15° C to −55° C, than the reading noted in part c.

*NOTE*

*1 division of the DELAY TIME POSITION dial is one complete revolution of the inner knob. 0.01 division is one minor division of the inner knob.*

e. Rotate the DELAY TIME POSITION dial to position each successive time marker to the beginning of the sweep.

f. CHECK—DELAY TIME POSITION dial for a difference in reading of: 1.00 ±0.01 (0.99 to 1.01) from +15° C to +35° C; 1.00 ±0.03 (0.99 to 1.03), from −15° C to +55° C, than the adjacent time marker.

## 3. Check/Adjust Horizontal Amplifier Gain (R4373, R4272)

a. Set:

| | |
|---|---|
| HORIZ DISPLAY | A |
| TIME/DIV (both) | 1 ms |
| DELAY TIME POSITION | Fully counterclockwise |

b. Select 1 ms time markers from the time-mark generator.

c. CHECK—Display for 1 marker/division ±2% (±0.2 division at the eleventh time marker).

d. ADJUST—X1 Gain (R4274) for exactly 1 marker/division.

e. Select 0.1 ms time markers from the time-mark generator.

f. Press X10 MAG push button in.

g. CHECK—X10 MAG LED is on when the X10 MAG push button is in.

h. CHECK—1 marker/division ±3% (±1 1/2 minor divisions at the eleventh time marker).

i. ADJUST—X10 Gain (R4373) for exactly 1 time marker/division.

## 4. Check Sweep Linearity

a. CHECK—Linearity over any 2 divisions of the magnified sweep to be within 0.1 division.

b. Release the X10 MAG push button.

c. Select 1 ms time markers from the time-mark generator.

d. CHECK—Linearity over any 2 divisions of the sweep to be within 0.1 division.

## 5. Check/Adjust R4253 Magnifier Centering (SN B011250—UP) and R4275 Registration

a. Push the X10 MAG push button in.

*NOTE*

*Perform parts b through e for SN B011250—up. Below SN B011250, skip to part f.*

b. Press BEAM FIND push button in.

c. CHECK—Display is centered horizontally.

d. ADJUST—Horizontal DC Centering (R4253) to horizontally center the display.

e. Release BEAM FIND push button.

f. Select 5 ms time markers from the time-mark generator.

g. Position the middle time marker to the center vertical graticule line.

h. Release the X10 MAG push button.

i. CHECK—Middle time marker is within 0.2 division of the center vertical graticule line.

j. ADJUST—Magnifier Registration (R4275) to position the middle time marker to the center vertical graticule line.

k. Repeat parts c through j (parts a and f through j for SN below B011250) until no horizontal shift is observed between X10 MAG in and X10 MAG out.

## 6. Check/Adjust B Sweep Calibration (R6052)

a. Set:

| | |
|---|---|
| DELAY TIME POSITION | Fully counterclockwise |
| HORIZ DISPLAY | B DLY'D |
| A TIME/DIV | 2 ms |
| B TIME/DIV | 1 ms |
| X10 MAG | Off (button out) |

b. Select 1 ms time markers from the time-mark generator.

c. CHECK—Display for 1 time marker/division ±2% (1 minor division at the eleventh time marker).

d. ADJUST—B Sweep Cal (R6052) for exactly 1 time marker/division.

## 7. Check A Sweep Length

a. Set:

| | |
|---|---|
| TIME/DIV (both) | 1 ms |
| HORIZ DISPLAY | A |

b. Select 5 ms time markers.

c. Position the third time marker horizontally to the center vertical graticule line.

d. CHECK—Display extends to the right of the center vertical graticule line 1 division (±0.5 division).

## 8. Check Variable Time/Division

a. Set the A TIME/DIV switch to 2 ms.

b. Select 5 ms time markers from the time-mark generator.

c. CHECK—At least 1 time marker/division can be obtained by adjusting the VAR TIME/DIV control.

d. CHECK—UNCAL LED comes on when the VAR TIME/DIV control is out of the detent position.

e. Return the VAR TIME/DIV control to the detent position.

## 9. Check Horizontal POSITION Range

a. Turn the Horizontal POSITION control fully clockwise.

b. CHECK—Start of sweep is to the right of the center vertical graticule line.

c. Turn the Horizontal POSITION control fully counterclockwise.

d. CHECK—End of sweep is to the left of the center vertical graticule line.

*NOTE*

*Horizontal POSITION control is a combined Coarse and Fine position control mounted on the same shaft in a mechanical arrangement that allows the Fine position potentiometer to rotate approximately 1/4 turn (1/8 turn in either direction from midrange) before the Coarse position control potentiometer is engaged.*

e. Rotate the horizontal POSITION control through its Fine range.

f. CHECK—Horizontal POSITION control Fine range will position the sweep approximately 0.5 divisions.

## 10. Check/Adjust A 10 μs Timing (C6002)

a. Set:

| | |
|---|---|
| DELAY TIME POSITION | 1.00 |
| A TIME/DIV | 10 μs |
| B TIME/DIV | 1 μs |

b. Select 10 μs time markers from the time-mark generator.

c. CHECK—Display for 1 time marker/division ±2% (1 minor division at the eleventh time marker).

d. ADJUST—10 μs timing (C6002), with a low capacitance screwdriver, for exactly 1 time marker/division.

e. Set the HORIZ DISPLAY switch to B DLY'D and B TRIGGER SOURCE to STARTS AFTER DELAY.

f. Horizontally position the displayed marker to align it with a vertial graticule line.

g. Set DELAY TIME POSITION to 9.00.

h. ADJUST—10 μs timing (C6002) with a low capacitance screwdriver, so the displayed marker is aligned with the same vertical graticule line as in part f.

i. Repeat parts f through h until no error exists between a DELAY TIME POSITION dial setting of 1.00 and 9.00.

## 11. Check/Adjust A Sweep High Speed Timing (C6015)

a. Set:

| | |
|---|---|
| DELAY TIME POSITION | 1.50 |
| B TRIGGER SOURCE | STARTS AFTER DELAY |
| A TIME/DIV | 0.5 μs |
| B TIME/DIV | 0.05 μs |
| HORIZ DISPLAY | A |

b. Select 0.5 μs time markers from the time-mark generator.

c. CHECK—Display for 1 time marker/dvision ±2% (1 minor division at the eleventh time marker).

d. ADJUST—A High Speed Timing (C6015), with the low-capactiance screwdriver, for exactly 1 time marker/division.

e. Switch the HORIZ DISPLAY switch to B DLY'D.

f. Use Horizontal POSITION control to position the displayed marker so it is aligned with the center vertical graticule line.

g. Set DELAY TIME POSITION to 8.50.

h. CHECK—Displayed time marker aligns with the center vertical graticule line.

i. ADJUST—A High Speed Timing (C6015), with a low-capacitance screwdriver, so the displayed marker is aligned with the center vertical graticule line.

j. INTERACTION—Between the two positions of the DELAY TIME POSITION dial when adjusting C6015. Compromise the adjustments as necessary to achieve correct timing.

## 12. Check/Adjust B Sweep High Speed Timing (C6042)

a. Set:

| | |
|---|---|
| DELAY TIME POSITION | Fully counterclockwise |
| HORIZ DISPLAY | B DLY'D |
| B TRIGGER SOURCE | NORM |
| A TIME/DIV | 1 μs |
| B TIME/DIV | 0.5 μs |

b. Adjust the A and B TRIGGER LEVEL controls for a stable display.

c. CHECK—Display for 1 time marker/division ±2% (1 minor division at the eleventh time marker).

d. ADJUST—B High Speed Timing (C6042), with a low capacitance screwdriver, for exactly 1 time marker/division.

## 13. Check A and B Time/Division Accuracy

a. CHECK—Using the B TIME/DIV switch and the time-mark generator settings given in Table 4-15, check B sweep timing is within 0.2 division, over the first 10 divisions of the display.

**Table 4-15**

**A AND B TIMING ACCURACY**

| A and B Time/Div Switch Setting | Time-mark Generator Output | CRT Display (Markers/ Division) |
|---|---|---|
| 0.02 μs | 20 ns | 1 |
| 0.05 μs | 50 ns | 1 |
| 0.1 μs | 0.1 μs | 1 |
| 0.2 μs | 0.2 μs | 1 |
| 0.5 μs | 0.5 μs | 1 |
| 1 μs | 1 μs | 1 |
| 2 μs | 2 μs | 1 |
| 5 μs | 5 μs | 1 |
| 10 μs | 10 μs | 1 |
| 20 μs | 20 μs | 1 |

**Table 4-15 (cont)**

| A and B Time/Div Switch Setting | Time-mark Generator Output | CRT Display (Markers/ Division) |
|---|---|---|
| 50 μs | 50 μs | 1 |
| 0.1 ms | 0.1 ms | 1 |
| 0.2 ms | 0.2 ms | 1 |
| 0.5 ms | 0.5 ms | 1 |
| 1 ms | 1 ms | 1 |
| 2 ms | 2 ms | 1 |
| 5 ms | 5 ms | 1 |
| 10 ms[a] | 10 ms | 1 |
| 20 ms[a] | 20 ms | 1 |
| 50 ms[a] | 50 ms | 1 |
| **A SWEEP ONLY** | | |
| 0.1 s[a] | 0.1 s | 1 |
| 0.2 s[a] | 0.1 s | 1 |
| 0.5 s[a] | 0.5 s | 1 |

[a] Switch A TRIG MODE to NORM below 5 ms/division.

b. Set the HORIZ DISPLAY switch to A.

c. CHECK—Using the A TIME/DIV switch and the time-mark generator settings given in Table 4-15 check A sweep timing within 0.2 division, over the first 10 divisions of the display.

## 14. Adjust High-Speed Magnified Timing (C4246, C4247)

a. Set:

| | |
|---|---|
| HORIZ DISPLAY | A |
| X10 MAG | X10 (button in) |
| Horizontal POSITION | Midrange (as required) |
| A and B TIME/DIV | 0.05 μs |

b. Select 5 ns time markers from the time-mark generator.

c. Set CH 1 VOLTS/DIV for at least a 4-division display.

d. CHECK—Display for 1 time marker/division ±3% (±1 1/2 minor divisions at the eleventh time marker).

e. ADJUST—C4246 and C4247 equally for 1 time marker/division over the entire 10 divisions.

f. Set A and B TIME/DIV to 0.02 μs.

*NOTE*

*For SN B011250—up, perform parts g through j. For SN below B011250 skip to part k.*

g. Press BEAM FIND push button in.

h. CHECK—Display is centered horizontally.

i. ADJUST—Horizontal DC Centering R4253 to horizontally center the compressed display. (Recheck Magnifier Registration if this adjustment is made.)

j. Release BEAM FIND push button.

k. ADJUST—C4246 for 2 time marker/5 divisions over the entire 10 divisions (adjust Horizontal POSITION control as necessary).

l. Set A and B TIME/DIV switch to 0.05 μs.

m. ADJUST—C4247 for 1 time marker/division over the entire 10 divisions.

n. Repeat part f and parts k through m for best timing on 0.05 μs and 0.02 μs ranges until no further improvement is obtained.

## 15. Check A and B Magnified Timing Accuracy

a. CHECK—Using the A TIME/DIV switch settings and the time-mark generator settings given in Table 4-16 check A magnified sweep timing is within 0.3 division over the center 10 divisions of the magnified display. Note the portions of the total magnified sweep length to be excluded from the measurement.

b. Set the HORIZ DISPLAY switch to B DLY'D.

c. CHECK—Using the B TIME/DIV switch and the time-mark generator settings given in Table 4-16 check B magnified sweep timing, within 0.3 division over the center 10 divisions of the magnified display. Note the portions of the total magnified sweep length to be excluded from the measurement.

d. Release the X10 MAG push button.

**Table 4-16**

**A AND B MAGNIFIED ACCURACY**

| A and B Time/Div Switch Setting | Time-mark Generator Output | CRT Display (Markers/Division) | Portions of Total Magnified Sweep Length to Exclude from Measurement |
|---|---|---|---|
| 0.02 μs | 2 ns | 1 | First and last 25 divisions |
| 0.05 μs | 5 ns | 1 | First and last 10 divisions |
| 0.1 μs | 10 ns | 1 | First and last 5 divisions |
| 0.2 μs | 20 ns | 1 | First and last 2.5 divisions |
| 0.5 μs | 50 ns | 1 | |
| 1 μs | 0.1 μs | 1 | |
| 2 μs | 0.2 μs | 1 | |
| 5 μs | 0.5 μs | 1 | |
| 10 μs | 1 μs | 1 | |
| 20 μs | 2 μs | 1 | |
| 50 μs | 5 μs | 1 | |
| 0.1 ms | 10 μs | 1 | |
| 0.2 ms | 20 μs | 1 | |
| 0.5 ms | 50 μs | 1 | |
| 1 ms | 0.1 ms | 1 | |
| 2 ms | 0.2 ms | 1 | |
| 5 ms | 0.5 ms | 1 | |
| 10 ms[a] | 1 ms | 1 | |
| 20 ms[a] | 2 ms | 1 | |
| 50 ms[a] | 5 ms | 1 | |
| **A SWEEP ONLY** | | | |
| 0.1 s[a] | 10 ms | 1 | |
| 0.2 s[a] | 20 ms | 1 | |
| 0.5 s[a] | 50 ms | 1 | |

[a] Switch TRIG MODE to NORM below 5 ms/division.

## 16. Check Delay or Differential Time Accuracy

a. Set:

| | |
|---|---|
| B TRIGGER SOURCE | STARTS AFTER DELAY |
| A TRIG MODE | AUTO |
| TIME/DIV (both) | According to Table 4-17 |
| HORIZ DISPLAY | ALT |

b. CHECK—Using the A TIME/DIV switch, B TIME/DIV switch, and the time-mark generator settings given in Table 4-17, check differential time accuracy is within the given tolerance. First set the DELAY TIME POSITION dial to 1.00 and rotate the dial slightly until the sweep starts at the top of the second time marker. Note the control setting and then set the dial to 9.00 and rotate it slightly until the sweep starts at the top of the tenth time marker. Delay TIME POSITION dial setting must be 8.00 divisions higher, ±0.08 division.

**Table 4-17**

**DIFFERENTIAL TIME ACCURACY**

| A Time/ Div Switch Setting | B Time/ Div Switch Setting | Time-mark Generator Output | Allowable Error for Given Accuracy |
|---|---|---|---|
| 0.1 μs | 0.02 μs | 0.1 μs | ±8 minor dial divisions |
| 0.2 μs | 0.05 μs | 0.2 μs | |
| 0.5 μs | 0.05 μs | 0.5 μs | |
| 1 μs | 0.1 μs | 1 μs | |
| 2 μs | 0.2 μs | 2 μs | |
| 5 μs | 0.5 μs | 5 μs | |
| 10 μs | 1 μs | 10 μs | |
| 20 μs | 2 μs | 20 μs | |
| 50 μs | 5 μs | 50 μs | |
| 0.1 ms | 10 μs | 0.1 ms | |
| 0.2 ms | 20 μs | 0.2 ms | |
| 0.5 ms | 50 μs | 0.5 ms | |
| 1 ms | 0.1 ms | 1 ms | |
| 2 ms | 0.2 ms | 2 ms | |
| 5 ms | 0.5 ms | 5 ms | |
| 10 ms[a] | 1 ms | 10 ms | |
| 20 ms[a] | 2 ms | 20 ms | |
| 50 ms[a] | 5 ms | 50 ms | |
| 0.1 s[a] | 10 ms | 0.1 s | |
| 0.2 s[a] | 20 ms | 0.2 s | |
| 0.5 s[a] | 50 ms | 0.5 s | |

**[a] Below 5 ms/division, set HORIZ DISPLAY to B DLY'D and A TRIG MODE to NORM.**

*NOTE*

*Below 5 ms/division ALT HORIZ DISPLAY sweeps alternate too slowly to observe display with ease; therefore, set HORIZ DISPLAY TO B DLY'D. If in doubt as to the correct setting of the DELAY TIME POSITION dial, set the HORIZ DISPLAY switch to A INTEN and check which marker is intensified.*

## 17. Check Delay or Differential Time Jitter

a. Set:

| | |
|---|---|
| DELAY TIME POSITION | 1.00 |
| HORIZ DISPLAY | B DLY'D |
| A TIME/DIV | 1 ms |
| B TIME/DIV | 0.2 μs |
| A TRIG MODE | AUTO |

b. Select 1 ms time markers from time-mark generator.

c. Position the time marker near the center of the display area with the DELAY TIME POSITION dial.

d. CHECK—Jitter on the leading edge of the time marker should not exceed 1 division (2.5 divisions if the instrument is being operated on a 50 Hz line voltage). Disregard the slow drift.

e. Turn the DELAY TIME POSITION dial to 9.00 and slightly readjust so the time marker is displayed near the center of the display area.

f. CHECK—Jitter on the leading edge of the time marker should not exceed 1 division (2.5 divisions if the instrument is being operated on a 50 Hz line voltage). Disregard the slow drift.

g. Disconnect test setup.

## 18. Check/Adjust X Gain (R4381)

a. Set:

| | |
|---|---|
| TIME/DIV (both) | X-Y |
| VOLTS/DIV (both) | 5 mV |
| CH 1 AC-GND-DC | AC |
| CH 2 AC-GND-DC | GND |
| HORIZ DISPLAY | A |
| A TRIGGER SOURCE | NORM |



@

*NOTE*

*Setting a TIME/DIV switch to X-Y position disables all VERT MODE switches, and automatically selects CH 1 input for the X-Axis signal and CH 2 input for the Y-Axis signal.*

b. Connect standard-amplitude signal from the calibration generator to the CH 1 input via a 50 Ω unterminated bnc cable. Set the generator output amplitude to 20 mV.

c. CHECK—Display for 4 divisions of horizontal deflection ±4% (4 divisions ±0.16 division).

d. Switch the CH 1 AC-GND-DC switch to DC.

e. CHECK—Display for 4 divisions of horizontal deflection ±4% (4 divisions ±0.16 division). It is normal for this check to be slightly less than that observed in part c.

f. Set the CH 1 AC-GND-DC switch to AC.

g. ADJUST—X Gain (R4381) for exactly 4 divisions of horizontal deflection.

h. Disconnect test setup.

## 19. Check X-Y Phasing and Bandwidth

a. Connect the output of the leveled sine-wave generator to the CH 1 and CH 2 inputs via a 50 Ω bnc cable, 50 Ω termination, and a dual-input coupler.

b. Adjust the leveled sine-wave generator for an 8-division horizontal display at 50 kHz.

c. Set the CH 2 AC-GND-DC switch to AC.

d. Center the display vertically and horizontally with the Horizontal POSITION and CH 2 POSITION controls.

e. CHECK—Display for an opening at the center horizontal graticule line of 0.4 division or less.

f. Set the CH 2 AC-GND-DC switch to GND.

g. Adjust the leveled sine-wave generator for a 10-division horizontal display at 50 kHz.

h. Increase the leveled sine-wave generator frequency until the display is reduced to 7 divisions.

i. CHECK—Output frequency of the leveled sine-wave generator is at least 4 MHz.

j. Disconnect the test setup.

## 20. Check B Ends A

a. Set:

| | |
|---|---|
| HORIZ DISPLAY | A INTEN |
| A TIME/DIV | 1 ms |
| B TIME/DIV | 0.1 ms |
| A TRIGGER HOLDOFF | B ENDS A (in detent) |

b. Adjust the INTENSITY control so the A sweep portion of the display is visible.

c. Rotate the DELAY TIME POSITION dial through its range.

d. CHECK—A sweep ends after the intensified portion at all settings of the DELAY TIME POSITION dial.

## 21. Check A Trigger Holdoff

a. Set:

| | |
|---|---|
| HORIZ DISPLAY | A |
| A TRIGGER HOLDOFF | NORM |
| A TRIGGER LEVEL | Fully clockwise |

b. Connect the A +GATE output signal (from 465B rear panel) to the test oscilloscope via a 50 Ω unterminated bnc cable.

c. Set the test oscilloscope TIME/DIV switch and VAR TIME/DIV control so that the bottom portion of the waveform (holdoff time of the A +GATE) is exactly 1 division in length.

d. Rotate the A TRIGGER HOLDOFF control clockwise.

e. CHECK—At least 10 times increase in the holdoff time of the A +GATE.

f. Set the A TRIGGER HOLDOFF control to NORM.

g. Disconnect test equipment.

For Service Manuals Contact
MAURITRON TECHNICAL SERVICES
8 Cherry Tree Rd, Chinnor
Oxon OX9 4QY
Tel:- 01844-351694 Fax:- 01844-352554
Email:- enquiries@mauritron.co.uk



@

# GATES, CALIBRATOR, AND EXT Z AXIS

| Equipment Required | |
|---|---|
| 1. Test Oscilloscope | 4. Shorting Strap |
| 2. 42-inch, 50 Ω Bnc Cable (2 required) | 5. Calibration Generator |
| 3. Digital Voltmeter | 6. Bnc T Connector |
| | 7. 3-inch Slotted Screwdriver |

*See* **ADJUSTMENT LOCATIONS 1** *in the Diagrams section for adjustments and test points (TP).*

## 465B Control Settings

**Power Controls**

| | |
|---|---|
| Regulating Range Selector | Medium |
| Line Voltage Selector | 115 V |
| POWER | ON |

**CRT Controls**

| | |
|---|---|
| INTENSITY | As desired |
| FOCUS | Best focused display |
| SCALE ILLUM | As desired |
| B INTENSITY | As desired |

**Vertical Controls (both Channels if applicable)**

| | |
|---|---|
| VOLTS/DIV | 5 mV |
| VAR | Calibrated detent |
| POSITION | Midrange |
| VERT MODE | CH 1 |
| INVERT | Off (button out) |
| 20 MHz BW LIMIT | Full bandwidth (button out) |

**Triggering Controls (both A and B if applicable)**

| | |
|---|---|
| LEVEL | Fully clockwise |
| SLOPE | + |
| COUPLING | AC |
| A SOURCE | NORM |
| B SOURCE | STARTS AFTER DELAY |
| A TRIG MODE | AUTO |

**Sweep Controls**

| | |
|---|---|
| HORIZ DISPLAY | B DLY'D |
| DELAY TIME POSITION | Fully counterclockwise |
| A TIME/DIV | 50 μs |
| B TIME/DIV | 50 μs |
| VAR TIME/DIV | Calibrated detent |
| X10 MAG | Off (button out) |
| POSITION | Midrange |
| A TRIGGER HOLDOFF | NORM |

### 1. Check A and B +Gates

a. Connect the B +GATE output (from the rear panel of the 465B) to the test oscilloscope via a 50 Ω unterminated bnc cable.

b. CHECK—Test oscilloscope display for a positive-going pulse of +5.5 V in amplitude (within 0.5 V).

c. Disconnect the cable from the B +GATE output and connect it to the A + GATE output.

d. CHECK—Test oscilloscope display for a positive-going pulse of +5.5 V in amplitude (±0.5 V).

e. Disconnect test equipment.

### 2. Check/Adjust Calibrator DC Level (R4293)

a. Connect a shorting strap between TP4177 and TP4178.

b. Connect digital voltmeter common lead to chassis ground and + lead to the CALIBRATOR current loop.

c. CHECK—CALIBRATOR dc level is 300 mV ±1% (297 to 303 mV at 0°C to +40°C).

d. ADJUST—Amplitude Cal (R4293) for exactly 300 mV.

e. Remove the shorting strap and the digital voltmeter connections.

f. Connect a 10X probe from the test oscilloscope to the CALIBRATOR current loop.

g. CHECK—Test oscilloscope display for a 0.3 V square wave with a duration of about 1 ms.

h. Disconnect the test setup.

**3. Check External Z Axis**

a. Set:

| | |
|---|---|
| HORIZ DISPLAY | A |
| A TIME/DIV | 0.2 ms |
| A TRIGGER SOURCE | EXT |

b. Set the INTENSITY control for a normal viewing level.

c. Connect the calibration generator standard-amplitude signal to the A External Trigger input via a 50 Ω bnc cable and bnc T connector. Connect from the bnc T to the EXT Z-AXIS input (465B rear panel) via a 50 Ω bnc cable. Set the generator output for 5 V.

d. Adjust A TRIGGER LEVEL for a stable display (TRIG LED on).

e. CHECK—Display for noticeable intensity modulation.

f. Disconnect the test setup.

For Service Manuals Contact
MAURITRON TECHNICAL SERVICES
8 Cherry Tree Rd, Chinnor
Oxon OX9 4QY
Tel:- 01844-351694 Fax:- 01844-352554
Email:- enquiries@mauritron.co.uk

# MAINTENANCE

## INTRODUCTION

This section of the manual contains information for use in preventive maintenance, troubleshooting and corrective maintenance. Procedures for removal and replacement of the standard instrument cabinet and the rack adapter are presented at the beginning of the section. Should the instrument require shipment to a Tektronix Service Center for repair, refer to the repackaging instructions at the end of this section.

## CABINET AND RACK ADAPTER REMOVAL AND REPLACEMENT

The standard cabinet protects the interior of this instrument from accumulation of dust and also provides protection to personnel from the operating potentials present. In addition, the cabinet reduces the emi (electromagnetic interference) radiation from the instrument and interference to the display due to other equipment.

The front panel cover provides a dust-tight seal around the front panel and protects the front panel when storing or transporting the instrument.

The Rack Adapter cabinet for the 465B provides the proper electrical environment for the instrument, reduces dust accumulation, minimizes handling damage, and provides a means for mounting the instrument solidly to a surface such as a rack or console.

### 'tandard Cabinet Removal

The standard instrument cabinet can be removed in the following manner:

1. Disconnect the instrument power cord from the power source.

2. Install the front panel cover and set the instrument face on a flat surface.

3. Unwrap the power cord from the instrument feet.

4. Remove the six screws indicated in Figure 5-1 and remove the rear cabinet frame (with feet and screws) from the instrument as an intact assembly.

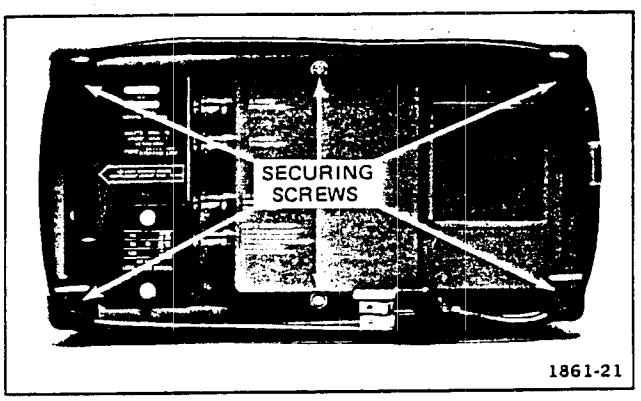


Figure 5-1. Removing the wrap-around cabinet.

5. Lift the cabinet up until it is separated from the instrument and power cord.

**WARNING**

*Dangerous potentials exist at several points throughout this instrument. When the instrument is operated with the cabinet removed, do not touch exposed connections or components. Some transistors may have elevated cases. Dsiconnect power before cleaning the instrument or replacing parts.*

### Standard Cabinet Installation

The standard instrument cabinet should be installed in the following manner:

1. Disconnect the instrument power cord from the power source.

2. If parts were removed or replaced, check all sections of the instrument for proper assembly. It may be helpful to use the diagrams in Section 9, Replaceable Mechanical Parts List, for the location of parts.

3. 465B DM-series only—If the DM-series main circuit-board is not in place, install the board on the main chassis.

4. Install the front panel cover and set the instrument face on a flat surface.

5. Place the cabinet handle against the bottom of the cabinet (bottom of cabinet is nearest to the carrying handle pivot points).

6. Pull the power cable through the cabinet and carefully slide the cabinet over the instrument. Avoid pinching cables or damaging components that protrude from circuit boards.

7. Using both hands, press lightly on the top and bottom sides of the cabinet until the front edge of the cabinet is inserted into the braided gasket groove around the full periphery of the front cabinet frame.

8. Pull the power cord through the rear cabinet frame, align the cutout portion in the frame for proper fit at the regulating range selector cover, and work the frame into place.

9. Set the feet and screws in place and with one hand exert a light downward pressure on the rear cabinet frame. Press lightly on the top and bottom sides of cabinet with the other hand, checking that cabinet edge is properly seated in the gasket groove of both front and rear frames. Continue to exert a downward pressure and tighten the six screws of the rear frame to a snug fit. Do not over-tighten these screws.

### Rack Adapter Removal

The Rack Adapter can be removed from the instrument in the following manner:

1. Remove the hardware that fastens the Rack Adapter to the rack and pull the adapter partially out. Disconnect the instrument power cord from the power source and remove any interconnecting cables.

*NOTE*

*It if is desired to tilt the Rack Adapter and instrument, remove a screw from the rear of each slide section mounted to the Rack Adapter. These securing screws are an important part of the mounting and should be installed when tilt operation is not necessary.*

2. Remove the Rack Adapter, with instrument, from the rack and set the bottom of the complete assembly on a flat surface.

3. Remove two setscrews from the top front of Rack Adapter chassis, (0.125-inch Allen wrench is required to remove the setscrews). It may be helpful to use the diagrams in Section 9, Replaceable Mechanical Parts List, for the locations of parts.

4. Remove 10 screws that secure the rear support plate to an angle bracket on one side, to the Rack Adapter chassis on the opposite side, and to the rear of the instrument. Remove the rear support plate and blue plastic rear frame.

5. Slide the instrument forward through the adapter cabinet, using both hands (on front and rear) to lift and guide the instrument until separated from the Rack Adapter.

**WARNING**

*Dangerous potentials exist at several points throughout this instrument. When the instrument is operated with the Rack Adapter removed, do not touch exposed connections or components. Some transistors may have elevated cases. Disconnect power before cleaning the instrument or replacing parts.*

### Rack Adapter Installation

The Rack Adapter should be installed in the following manner:

1. Disconnect the instrument power cord from the power source.

2. Verify proper assembly of all sections of the instrument if parts were removed or replaced. It may be helpful to use the diagrams in Section 9, Replaceable Mechanical Parts List, for the locations of parts.

3. Set the bottom of the Rack Adapter on a flat surface, pull the power cord through the cabinet portion of the Rack Adapter, and carefully slide the instrument rearward using both hands (on front and rear) to lift and guide the instrument until fully inserted. Avoid pinching cables or damaging components that protrude from circuit boards.

4. Check that the front edge of the cabinet portion of the Rack Adapter is inserted into the braided gasket groove around the full periphery of the instrument front frame. Pull the power cord through the blue plastic rear frame. Align the cutout portion in the plastic frame for proper fit at the regulating-range selector cover and work the frame into place.

5. Apply the rear support bracket to the rear of the Rack Adapter. Install, without tightening, six screws that secure the rear support bracket through the blue plastic frame to the rear of the instrument and four screws that secure the rear support bracket to an angle bracket and to the Rack Adapter chassis.

6. Check that all parts of the complete assembly are properly seated, then tighten the screws at the rear of the instrument and the screws at the adapter chassis to a snug fit. Do not overtighten these screws.

7. Install two setscrews at the top front of the Rack Adapter chassis (0.125-inch Allen wrench is required to install the setscrews).

8. Mount the Rack Adapter slide sections to the rack slide assemblies, connect the power cord, connect any interconnecting cables, push the Rack Adapter into final operating position, and install the adapter-to-rack hardware.

## PREVENTIVE MAINTENANCE

### Introduction

Preventive maintenance consists primarily of cleaning and visual inspection. When performed on a regular basis, preventive maintenance can prevent instrument breakdown and ensure the reliability of this instrument. The severity of the environment to which the 465B is subjected will determine the frequency of maintenance. A convenient time to perform preventive maintenance is just prior to recalibration of the instrument.

### Cleaning

The cabinet minimizes accumulation of dust inside the instrument. Operation without the cabinet in place necessitates more frequent cleaning. The front cover provides a measure of dust protection for the front panel and the crt face. The front cover should be installed when storing or transporting the instrument.

**Interior.** Accumulation of dust and dirt should be removed as often as operating conditions require. Dirt can cause overheating and component breakdown. Dirt on components acts as an insulating blanket, preventing efficient heat dissipation. It also provides an electrical conduction path which can result in instrument failure, especially under high humidity conditions. The best way to clean the interior is to blow off the accumulated dust with dry, low-pressure air (approximately 9 pounds per square inch). Remove any remaining dirt with a soft brush or a cloth dampened with a mild detergent and water solution. A cotton-tipped applicator is useful for cleaning in narrow spaces or for cleaning ceramic terminal strips and circuit boards.

**CAUTION**

*Avoid the use of chemical cleaning agents which might damage the plastics used in this instrument. Do not use chemicals which contain acetone, benzene, toluene, xylene, petroleum ether, white kerosene, carbon tetrachloride, methylene chloride, trichloroethane, trichlorotrifluoroethane (Freon 113, -tf, -ta, -te, -tmc) and trichlorethylene. Recommended cleaning agents are isopropyl alcohol, kelite (1 part kelite, 20 parts water), and a solution of 1% mild detergent and 99% water. In the absence of these cleaners, it is safe to use ethyl alcohol (methanol).*

*Most spray circuit coolants contain Freon 12 as a propellant. Because many Freons adversely affect switch contacts, check the contents and brand name before using a spray coolant. The following brand names are acceptable coolants: Artic Freeze, Quik-Freeze, and Can-O-Gas. Do not use Zero Mist brand of circuit coolant. The only recommended circuit coolants for the volts/division attenuators are dry ice ($CO_2$) or isopropyl alcohol.*

**SWITCH CONTACTS.** Most of the switches in the 465B are circuit-board mounted, cam-actuated contacts. Care must be exercised to preserve the high-frequency characteristics of these switches. Switch maintenance is seldom necessary, but if it is required, observe the following precautions.

Clean the switch contacts only with isopropyl alcohol, especially in the area of the vertical attenuator boards. Carbon-based solvents will damage the polyphenylene oxide boards used for the attenuators. Apply the isopropyl alcohol with a camel hair bursh. Do not use cotton swabs, as they tend to snag on contacts, possibly causing damage, and they hold strands of cotton, causing intermittent electrical contact.

**EXTERIOR.** Loose dust accumulated on the outside of the oscilloscope can be removed with a soft cloth or small paint brush. The paint brush is particularly useful for dislodging dirt on and around the front-panel controls. Dirt which remains can be removed with a soft cloth dampened in a mild solution of detergent and water. Abrasive cleaners should not be used.

**CRT.** Two plastic light filters, one blue and one clear, are provided with the oscilloscope. Clean the light filter and the crt face with a soft lint-free cloth dampened with

denatured alcohol or a mild detergent and water solution. The optional crt mesh filter can be cleaned in the following manner:

1. Hold the filter in a vertical position and brush lightly with a Number 7 soft watercolor brush to remove light coatings of dust and lint.

2. Greasy residues or dried-on dirt can be removed with a solution of warm water and a neutral pH liquid detergent. Use the brush to lightly scrub the filter.

3. Rinse the filter thoroughly in clean water and allow to air dry.

4. If any lint or dirt remains, use clean low-pressure air (approximately 9 pounds per square inch) to remove it. Do not use tweezers or other hard cleaning tools on the filter, as the special finish may be damaged.

5. When not in use, store the mesh filter in a lint-free dust-proof container such as a plastic bag.

**AIR FILTER.** The air filter should be visually checked every few weeks and cleaned or replaced if dirty. More frequent inspections are required under severe operating conditions. The following procedure is suggested for cleaning the filter. If the filter is to be replaced, order new air filters from your local Tektronix Field Office or representative. Refer to the Replaceable Mechanical Parts List for ordering information.

1. Remove the filter by pulling it out of the retaining frame on the rear panel. Be careful not to drop any of the accumulated dirt into the instrument.

2. Flush the loose dirt from the filter with a stream of hot water.

3. Place the filter in a solution of mild detergent and hot water and let it soak for several minutes.

4. Squeeze the filter to wash out any remaining dirt.

5. Rinse the filter in clear water and allow it to dry.

6. Coat the dry filter with an air-filter adhesive (available from an air conditioner supplier, or see Maintenance Aids information at the end of this section).

7. Let the adhesive dry thoroughly.

8. Re-install the filter in the retaining frame.

## Visual Inspection

The instrument should be inspected occasionally for such defects as broken connections, broken or damaged ceramic strips, improperly seated semiconductors, damaged or improperly installed circuit boards, and heat-damaged parts.

The corrective procedure for most visible defects is obvious; however, particular care must be taken if heat-damaged components are found. Overheating usually indicates other trouble in the instrument; therefore, it is important that the cause of overheating be corrected to prevent recurrence of the damage.

## Lubrication

The fan motor and most of the potentiometers used in the 465B are permanently sealed and generally do not require periodic lubrication. The switches used in the 465B, both cam- and lever-type, are installed with proper lubrication applied where necessary and will rarely require any additional lubrication. A regular periodic lubrication program for the 465B is not recommended.

## Semiconductor Checks

Periodic checks of the transistors and other semiconductors in the oscilloscope are not recommended. The best check of semiconductor performance is actual operation in the instrument.

## Readjustment

To ensure accurate measurements, check the adjustment of this instrument after each 1000 hours of operation or, if used infrequently, every six months. In addition, replacement of components may necessitate readjustment of the affected circuits. The adjustment procedure can also be helpful in localizing certain troubles in the instrument. In some cases, minor troubles may be revealed and/or corrected by readjustment. Complete adjustment instructions are given in the Calibration Procedure section. If only a partial adjustment is performed, see the interaction chart, Table 4-6, for possible interactions with circuits not adjusted.

# TROUBLESHOOTING

## Introduction

The following information is provided to facilitate troubleshooting. Information contained in other sections of this manual should be used along with the following information to aid in locating the defective component. An understanding of the circuit operation is helpful in locating troubles, particularly where integrated circuits are used. See the Theory of Operation, Section 3, for this information.

## Troubleshooting Aids

**TROUBLESHOOTING CHARTS.** As an aid in locating problem areas, troubleshooting charts have been provided for the low-voltage power supplies, the −2450-volt power supply, and for a no-visible-display condition. These can be found on foldout pages in the Diagrams section.

**POWER DISTRIBUTION DIAGRAM.** As an aid in troubleshooting the power supplies, a power distribution diagram is provided on Diagram 14 in the foldout pages at the rear of this manual. The diagram shows the distribution for each voltage from the low-voltage power supply. It also shows the service jumpers that can be used to aid in isolating the power supply from the various circuit boards. Excessive loading on the low-voltage power supply by a circuit board can rapidly be traced to the faulty circuit board with the aid of the service jumpers. The service jumpers associated with a specific schematic diagram are indicated on the respective schematic diagram. The power distribution diagram should be used in conjunction with the power supply isolation procedures adjacent to troubleshooting diagrams located in the Diagrams section of this manual.

**GRID COORDINATE SYSTEM.** Each schematic diagram and circuit board illustration is sectioned by a grid system. A table listing the grid coordinates of each component shown is located adjacent to the schematic diagram. The table lists the grid location of components on both the schematic diagram and on the circuit board illustration to aid in cross referencing components between the schematic diagram and the circuit board illustration.

**DIAGRAMS.** Complete circuit diagrams are given on foldout pages in the Diagrams section. The portions of the circuit mounted on circuit boards are enclosed within grey lines. The component number and electrical value of each component in this instrument are shown on the diagrams (see the first page of the Diagrams section for definition of the reference designators used to identify components in this instrument). Important voltages and waveforms are also shown on the diagrams. The physical locations of the waveform test points are shown on the Circuit Board illustrations.

**CIRCUIT BOARD ILLUSTRATIONS.** In conjunction with each circuit diagram is a circuit board illustration. These can be found on the back of a pullout page preceding the circuit diagram to which it relates. Each circuit component shown on the circuit diagram is identified on the circuit board illustration by its component number. In general, the component numbers increase from the left side of the circuit board to the right side, and from the top to the bottom. The lowest component numbers will be at the top left corner, and the highest component numbers will be at the bottom right corner of the circuit board.

**ADJUSTMENT LOCATIONS ILLUSTRATIONS.** To aid in locating test points and adjustable components, the adjustment locations pullout pages (normally used with the adjustment procedure) permit rapid location of test points and adjustments, because only these components are identified.

**READ-ONLY MEMORY U1605 LOGIC TABLE.** Refer to the Vertical Switching Logic diagram located in the Diagrams section of this manual for the following discussion. Input signals to U1605, a read-only memory (ROM), are as follows:

Input lines $A_0$ through $A_2$ — Logic levels from the $Q_0$, $Q_1$, and $Q_2$ outputs of U1705 used to indicate the present state of the switching. ($Q_0$, $Q_1$, and $Q_2$ outputs are active when LO.)

Input lines $A_3$ through $A_6$ — Logic levels selected by the VERT MODE switches (CH 1, CH 2, ADD, and A TRIG VIEW). A HI logic level present indicates that the Vertical Mode is selected.

Input line $A_7$ — Logic level controlled by the X-Y position of the A TIME/DIV switch. A LO logic level is present when X-Y Horizontal Display is selected.

After U1705 is clocked, ROM U1605 uses the present data on its input lines ($A_0$ through $A_7$) to select the next output switching state to be presented to U1705. There are four output lines from U1605, $O_1$ through $O_4$. Output lines $O_1$ through $O_3$ carry the future data; the signal present on output line $O_4$ is the Chop Clock Oscillator enabling logic (HI enables).

In the partial table shown in Figure 5-2, no Vertical Modes are selected, and the present data from U1705 is an undefined column, (i.e., $\overline{000}$ is not a Vertical Mode selection). In the example given, the Chop Clock Oscillator will be enabled, and the next clock pulse to U1705 will switch U1705 output to 111. Table 5-1 shows that column 111 is the idle state of U1605 (the state switched to when no Vertical Modes are selected). In the Idle column, the future state of U1705 will remain 111, and the Chop Clock Oscillator will not be enabled. Each row across the table indicates the possible future states of U1705, while the column headings indicate the possible present state. The order of priority in switching (when multiple Vertical Modes are selected) is CH 1, CH 2, ADD, then A TRIG VIEW.

To use the table, determine the Vertical Mode(s) selected. Follow that row across the table. If the output of U1705 is at the present state indicated by a column heading, the data given in that column is the future state of U1705.

**Example 1.** Assume CH 1 and CH 2 Vertical Modes are selected. The present data from the Vertical Mode Switch is 10011. Move across that row to the 000 column. The data given indicates that if the present state of U1705 is 000, the future state will be 110 (CH 1) and that the Chop Clock Oscillator will be enabled. Following across the row, each column, except 110 (CH 1), gives the same future state. If the present state is CH 1, the future state will be 101 (CH 2). From there, it will switch back to CH 1 for the chopped display of the Channel 1 and Channel 2 input signals.

**Example 2.** Assume that X-Y Horizontal Display is selected. Go to any Vertical Mode selection in the bottom half of the table. All the columns indicate that regardless of the state of the U1705 output, the future state will be 101 (CH 2). When the output of U1705 goes to 101, the Chop Clock Oscillator will be turned off, and the Chop Clock to U1705 will cease.

**Example 3.** Assume ADD Vertical Mode is selected. In the Present Data from the Vertical Mode Switch column read 10100. Move across the row (adjacent to the data) to the 000 column and note that the future state of U1605 is 1100. The output state required to switch to the ADD display is 100. Trigger view is not selected, and both CH 1 and CH 2 are selected (LO logic level selects). The Chop Clock Oscillator will be enabled to clock U1705. After clocking, the $Q_0$ and $Q_1$ outputs (pins 3 and 6) of U1705 will be HI to gate U1805D and turn on transistor Q1636. This transistor supplies the extra current required to keep both CH 1 and CH 2 Diode Gates forward biased. In the case of the 000 state, it indicates that CH 1, CH 2, and A TRIG VIEW are selected for viewing together. While this output state exists, the Diode Gates will not be forward biased to allow this combination of signals to be displayed during the switching. If the ALT Vertical Mode is selected, the circuitry of the Vertical Mode Switch enables the Chop Clock Oscillator momentarily to switch U1605 to the selected state without waiting for the next Vert Alt Sync pulse from the Horizontal Display Logic circuit.

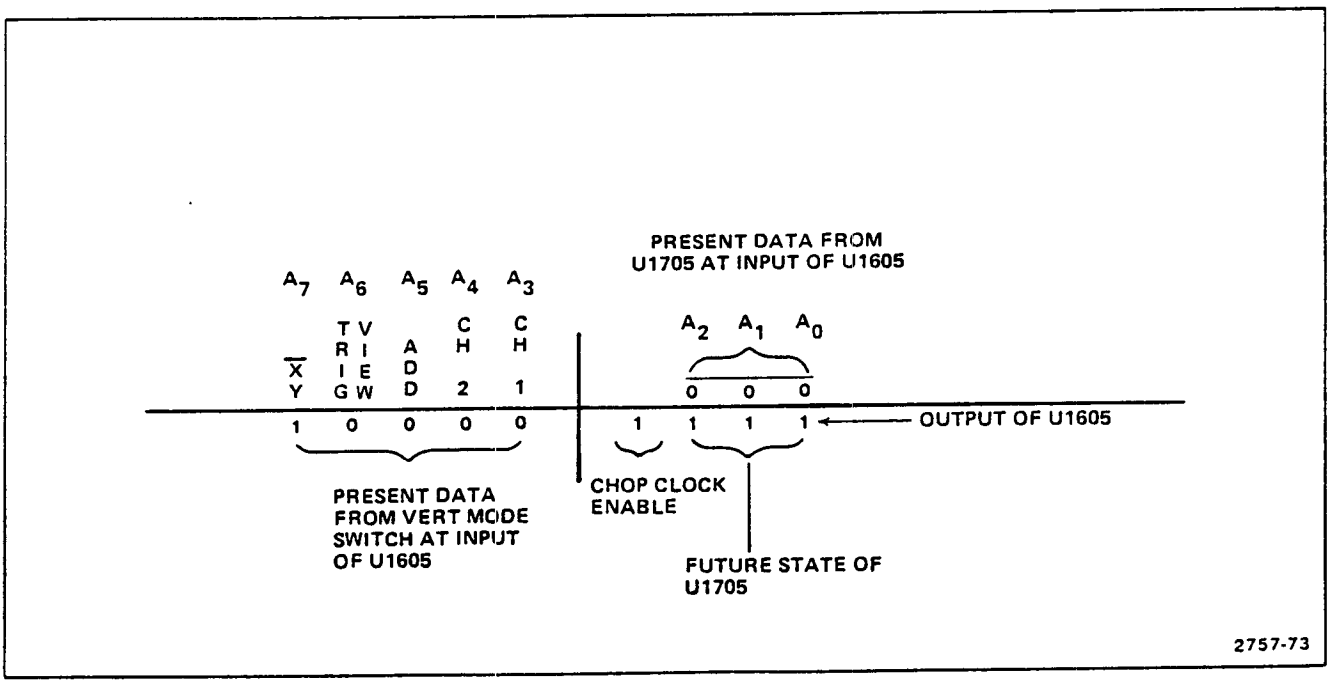


Figure 5-2. Partial Table 5-1.



@

Table 5-1

READ-ONLY MEMORY U1605 LOGIC

| VERT MODE PRESENT DATA AT U1605 | | | | | UNDEFINED | | | TRIG VIEW | ADD | CH 2 | CH 1 | IDLE |
|---|---|---|---|---|---|---|---|---|---|---|---|---|
| X Y | TRIG VIEW | ADD | CH 1 | CH 2 | $\overline{000}$ | $\overline{001}$ | $\overline{010}$ | $\overline{011}$ | $\overline{100}$ | $\overline{101}$ | $\overline{110}$ | $\overline{111}$ |
| 1 | 0 | 0 | 0 | 0 | 1111 | 1111 | 1111 | 1111 | 1111 | 1111 | 1111 | 0111 |
| 1 | 0 | 0 | 0 | 1 | 1110 | 1110 | 1110 | 1110 | 1110 | 1110 | 0110 | 1110 |
| 1 | 0 | 0 | 1 | 0 | 1101 | 1101 | 1101 | 1101 | 1101 | 0101 | 1101 | 1101 |
| 1 | 0 | 0 | 1 | 1 | 1110 | 1110 | 1110 | 1110 | 1110 | 1110 | 1101 | 1110 |
| 1 | 0 | 1 | 0 | 0 | 1100 | 1100 | 1100 | 1100 | 0100 | 1100 | 1100 | 1100 |
| 1 | 0 | 1 | 0 | 1 | 1110 | 1110 | 1110 | 1110 | 1110 | 1110 | 1100 | 1110 |
| 1 | 0 | 1 | 1 | 0 | 1101 | 1101 | 1101 | 1101 | 1101 | 1100 | 1101 | 1101 |
| 1 | 0 | 1 | 1 | 1 | 1110 | 1110 | 1110 | 1110 | 1110 | 1100 | 1101 | 1110 |
| 1 | 1 | 0 | 0 | 0 | 1011 | 1011 | 1011 | 0011 | 1011 | 1011 | 1011 | 1011 |
| 1 | 1 | 0 | 0 | 1 | 1110 | 1110 | 1110 | 1110 | 1110 | 1110 | 1011 | 1110 |
| 1 | 1 | 0 | 1 | 0 | 1101 | 1101 | 1101 | 1101 | 1101 | 1011 | 1101 | 1101 |
| 1 | 1 | 0 | 1 | 1 | 1110 | 1110 | 1110 | 1110 | 1110 | 1011 | 1101 | 1110 |
| 1 | 1 | 1 | 0 | 0 | 1100 | 1100 | 1100 | 1100 | 1011 | 1100 | 1100 | 1100 |
| 1 | 1 | 1 | 0 | 1 | 1110 | 1110 | 1110 | 1110 | 1011 | 1110 | 1100 | 1110 |
| 1 | 1 | 1 | 1 | 0 | 1101 | 1101 | 1101 | 1101 | 1011 | 1100 | 1101 | 1101 |
| 1 | 1 | 1 | 1 | 1 | 1110 | 1110 | 1110 | 1110 | 1011 | 1100 | 1101 | 1110 |
| 0 | 0 | 0 | 0 | 0 | 1101 | 1101 | 1101 | 1101 | 1101 | 0101 | 1101 | 1101 |
| 0 | 0 | 0 | 0 | 1 | 1101 | 1101 | 1101 | 1101 | 1101 | 0101 | 1101 | 1101 |
| 0 | 0 | 0 | 1 | 0 | 1101 | 1101 | 1101 | 1101 | 1101 | 0101 | 1101 | 1101 |
| 0 | 0 | 0 | 1 | 1 | 1101 | 1101 | 1101 | 1101 | 1101 | 0101 | 1101 | 1101 |
| 0 | 0 | 1 | 0 | 0 | 1101 | 1101 | 1101 | 1101 | 1101 | 0101 | 1101 | 1101 |
| 0 | 0 | 1 | 0 | 1 | 1101 | 1101 | 1101 | 1101 | 1101 | 0101 | 1101 | 1101 |
| 0 | 0 | 1 | 1 | 0 | 1101 | 1101 | 1101 | 1101 | 1101 | 0101 | 1101 | 1101 |
| 0 | 0 | 1 | 1 | 1 | 1101 | 1101 | 1101 | 1101 | 1101 | 0101 | 1101 | 1101 |
| 0 | 1 | 0 | 0 | 0 | 1101 | 1101 | 1101 | 1101 | 1101 | 0101 | 1101 | 1101 |
| 0 | 1 | 0 | 0 | 1 | 1101 | 1101 | 1101 | 1101 | 1101 | 0101 | 1101 | 1101 |
| 0 | 1 | 0 | 1 | 0 | 1101 | 1101 | 1101 | 1101 | 1101 | 0101 | 1101 | 1101 |
| 0 | 1 | 0 | 1 | 1 | 1101 | 1101 | 1101 | 1101 | 1101 | 0101 | 1101 | 1101 |
| 0 | 1 | 1 | 0 | 0 | 1101 | 1101 | 1101 | 1101 | 1101 | 0101 | 1101 | 1101 |
| 0 | 1 | 1 | 0 | 1 | 1101 | 1101 | 1101 | 1101 | 1101 | 0101 | 1101 | 1101 |
| 0 | 1 | 1 | 1 | 0 | 1101 | 1101 | 1101 | 1101 | 1101 | 0101 | 1101 | 1101 |
| 0 | 1 | 1 | 1 | 1 | 1101 | 1101 | 1101 | 1101 | 1101 | 0101 | 1101 | 1101 |

**RESISTOR COLOR CODE.** In addition to the brown composition resistors, some metal-film resistors and some wire-wound resistors are used in the 465B. The resistance values of wire-wound resistors are usually printed on the body of the component. The resistance values of composition resistors and metal-film resistors are color coded on the components with EIA color code (some metal-film resistors may have the value printed on the body). The color code is read starting with the stripe nearest the end of the resistor. Composition resistors have four stripes which consist of two significant figures, a multiplier, and a tolerance value (see Figure 5-3). Metal-film resistors have five stripes consisting of three significant figures, a multiplier, and a tolerance value.

**CAPACITOR MARKINGS.** The capacitance values of common disc capacitors and small electrolytics are marked on the side of the component body. The white ceramic capacitors used in the 465B are color coded in picofarads, using a modified EIA code (see Figure 5-3).

COLOR CODE

1861-20 A

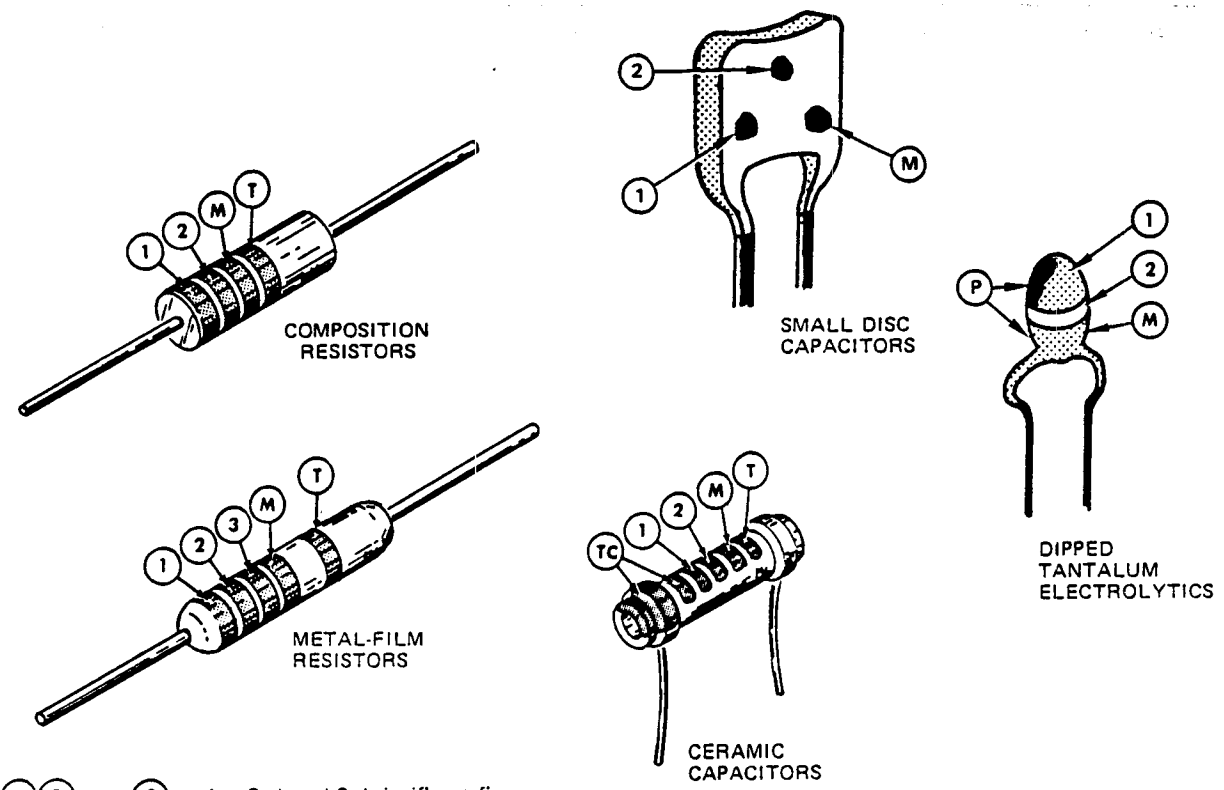


(1) (2) and (3) – 1st, 2nd, and 3rd significant figures

(M) –multiplier (T) –tolerance

(TC) –temperature coefficient

(P) –polarity and voltage rating

(T) and/or (TC) color code may not be present on some capacitors

| COLOR | SIGNIFICANT FIGURES | RESISTORS | | CAPACITORS | | | DIPPED TANTALUM VOLTAGE RATING |
|---|---|---|---|---|---|---|---|
| | | MULTIPLIER | TOLERANCE | MULTIPLIER | TOLERANCE | | |
| | | | | | over 10 pF | under 10 pF | |
| BLACK | 0 | 1 | --- | 1 | ±20% | ±2 pF | 4 VDC |
| BROWN | 1 | 10 | ±1% | 10 | ±1% | ±0.1 pF | 6 VDC |
| RED | 2 | $10^2$ or 100 | ±2% | $10^2$ or 100 | ±2% | --- | 10 VDC |
| ORANGE | 3 | $10^3$ or 1 K | ±3% | $10^3$ or 1000 | ±3% | --- | 15 VDC |
| YELLOW | 4 | $10^4$ or 10 K | ±4% | $10^4$ or 10,000 | +100% –9% | --- | 20 VDC |
| GREEN | 5 | $10^5$ or 100 K | ±½% | $10^5$ or 100,000 | ±5% | ±0.5 pF | 25 VDC |
| BLUE | 6 | $10^6$ or 1 M | ±¼% | $10^6$ or 1,000,000 | --- | --- | 35 VDC |
| VIOLET | 7 | --- | ±1/10% | --- | --- | --- | 50 VDC |
| GRAY | 8 | --- | --- | $10^{-2}$ or 0.01 | +80% –20% | ±0.25 pF | --- |
| WHITE | 9 | --- | --- | $10^{-1}$ or 0.1 | ±10% | ±1 pF | 3 VDC |
| GOLD | – | $10^{-1}$ or 0.1 | ±5% | --- | --- | --- | --- |
| SILVER | – | $10^{-2}$ or 0.01 | ±10% | --- | --- | --- | --- |
| NONE | – | --- | ±20% | --- | ±10% | ±1 pF | --- |

Figure 5-3. Color codes.



@

The dipped tantalum capacitors used in the 465B are color coded in microfarads (see Figure 5-3). The color dot indicates the positive lead and voltage rating. Be careful to observe the polarity and voltage rating, as capacitors are easily destroyed by reverse or over voltage.

**DIODE COLOR CODE.** The cathode end of each glass-encased diode is indicated by a stripe, a series of stripes, or a dot. For most silicone or germanium diodes with a series of stripes, the color code identifies the three significant digits of the Tektronix Part Number using the resistor color-code system (e.g., a diode color-coded pink or blue-, brown - gray - green indicates Tektronix Part Number 152-0185-00). The cathode and anode ends of metal-encased diodes can be identified by the diode symbol marked on the body.

**SEMICONDUCTOR LEAD CONFIGURATIONS.** Typical semiconductor lead configurations are shown at the beginning of the diagrams section.

## Troubleshooting Equipment

Refer to Table 5-2 in Maintenance Aid information at the end of this section for suggested test equipment.

## Troubleshooting Techniques

This troubleshooting procedure is arranged in an order which checks the simple trouble possibilities before proceeding with extensive troubleshooting. The first few checks ensure proper connection, operation, and calibration. If the trouble is not located by these checks, the remaining steps will aid in locating the defective component. When the defective component is located, it should be replaced following the replacement procedure given under Corrective Maintenance.

1. **CHECK CONTROL SETTINGS.** Incorrect control settings can indicate a trouble that does not exist. If there is any question about the correct function or operation of any control, see the Operating Instructions section of this manual or the 465B Operators Manual.

2. **CHECK ASSOCIATED EQUIPMENT.** Before proceeding with troubleshooting, check that the equipment used with this instrument is operating correctly. Check that the signal is properly connected and that the interconnecting cables are not defective. Also, check the power source.

3. **CHECK INSTRUMENT CALIBRATION.** Check the calibration of this instrument, or the affected circuit if the trouble exists in one circuit. The apparent trouble may only be a result of misadjustment and may be corrected by adjustment. Complete adjustment instructions are given in the Calibration Procedure section of this manual.

4. **VISUAL CHECK.** Visually check the portion of the instrument in which the trouble is located. Many troubles can be located by visible indications such as unsoldered connections, broken wires, damaged circuit boards, damaged components, etc.

5. **ISOLATE TROUBLE TO A CIRCUIT.** To isolate trouble to a particular circuit, note the trouble symptom. The symptom often identifies the circuit in which the trouble is located. When trouble symptoms appear in more than one circuit, check the power supplies, then check the affected circuits. If the trouble has been isolated to a power supply, follow the Troubleshooting Chart for that supply. The power supplies are interdependent. All the low-voltage power supplies depend on +55 volts for reference. If more than one supply appears defective, repair them in the following order: +55 Volt, +110 Volt, +15 Volt, −8 Volt, and −2450 Volt.

6. **CHECK CIRCUIT BOARD INTERCONNECTIONS.** After the trouble has been isolated to a particular circuit, check for loose or broken connections, improperly seated transistors, and heat-damaged components.

7. **CHECK VOLTAGES AND WAVEFORMS.** Often the defective component can be located by checking for the correct voltage or waveform in the circuit. Typical voltages are given on the diagrams. Waveforms are shown at the left of the circuit diagram.

*NOTE*

*Voltages and waveforms given on the diagrams are not absolute and may vary slightly between instruments. To obtain operating conditions similar to those used to take these readings, see the voltage and waveform setup procedures at the beginning of the Diagrams section for the preliminary equipment setup. Note the recommended test equipment, front panel control settings, voltage and waveform conditions, and test equipment cable connection instructions. The 465B Oscilloscope control settings required to obtain the given waveforms and voltages are located adjacent to the waveform diagrams. Changes to the control settings from the preliminary setup, other than those given, are not required.*

**8. CHECK INDIVIDUAL COMPONENTS.** The following procedures describe methods of checking individual components. Components which are soldered in place are best checked by disconnecting one end. This isolates the measurement from the effects of surrounding circuitry.

**WARNING**

*The Power switch must be turned off before removing or replacing components.*

**Semiconductors.** A good check of transistor operation is actual performance under operating conditions. A transistor can be most effectively check by substituting a new component for it (or one which has been checked previously). However, be sure that circuit conditions are not such that a replacement transistor might also be damaged. If substitute transistors are not available, use a dynamic tester. Static-type testers are not recommended, since they do not check operation under simulated operating conditions.

When troubleshooting transistors in the circuit with a voltmeter, measure the emitter-to-base and emitter-to-collector voltages to determine if the voltages are consistent with normal circuit voltage. Voltages across a transistor vary with the type of device and its circuit function. Some of these voltages are predictable. The emitter-to-base voltage of a conducting silicone transistor will normally be 0.6 to 0.8 volts. The emitter-to-collector voltage of saturated transistors is approximately 0.2 volts. Because these values are small, the best way to check them is by connecting the voltmeter across the junction and use a sensitive voltmeter setting. This method is preferable to comparing two voltages taken with respect to ground (both leads of the voltmeter must be isolated from ground, if this method is used). If values less than these are obtained, either the device is short-circuited or no current is flowing in the circuit. If values are in excess of the base-emitter voltages given, the junction is back-biased or the device is defective. Values in excess of those given for emitter-collector voltages could indicate either a non-saturated device operating normally, or a defective (open-circuited) transistor. If the device is conducting, voltage will be developed across resistances in series with it; if it is open, no voltage will be developed across resistances in series with it unless current is being supplied by a parallel path.

When troubleshooting a field-effect transistor, the voltage across its elements can be checked in the same manner as for a transistor. However, it should be remembered that in the normal depletion mode of operation, the gate-to-source junction is reverse biased; in the enhanced mode, the junction is forward biased.

Integrated circuits (IC) can be checked with a voltmeter, test oscilloscope, or by direct substitution. A good understanding of circuit operation is essential to troubleshooting circuits using IC. Use care when checking voltages and waveforms around the IC so that adjacent leads are not shorted together. Typical semiconductor lead configurations are shown at the beginning of the Diagrams section.

**Diodes.** A diode can be checked for an open or a short circuit by measuring the resistance between terminals with an ohmmeter set to the R X 1k scale. The diode resistance should be very high in one direction and very low when the meter leads are reversed. Do not check tunnel diodes or back diodes with an ohmmeter.

**CAUTION**

*Do not use an ohmmeter scale that has a high internal current. High currents may damage the diode. Do not measure tunnel diodes with an ohmmeter; use a dynamic tester (such as a TEKTRONIX Type 576 Transistor-Curve Tracer). Checks on diodes can be performed in much the same manner as on transistor emitter-to-base junctions. Silicon diodes should have 0.6 to 0.8 volt across the junction when conducting. Higher readings indicate that they are either back biased or defective, depending on polarity.*

**Resistors.** Check the resistors with an ohmmeter. Check the Replaceable Electrical Parts List for tolerance of the resistors used in this instrument. Resistors normally do not require replacement unless the measured value varies widely from the specified value.

**Inductors.** Check for open inductors by checking continuity with an ohmmeter. Shorted or partially shorted inductors can usually be found by checking the waveform response when high-frequency signals are passed through the circuit.

**Capacitors.** A leaky or shorted capacitor can best be detected by checking resistance with an ohmmeter on the highest scale. Do not exceed the voltage rating of the capacitor. The resistance reading should be high after initial charge of the capacitor. An open capacitor can be detected with a capacitance meter or by checking whether the capacitor passes ac signals.

**Attenuators.** The thick film attenuators are best checked by substitution. If only one channel of the 465B is not operating properly, and there is reason to believe an attenuator is defective, replace the suspected attenuator

with the same attenuator from the other channel and check instrument operation. If proper operation results, order a new attenuator.

**9. REPAIR AND READJUST THE CIRCUIT.** If any defective parts are located, follow the replacement procedures given in this section. Be sure to check the performance of any circuit that was repaired or that had any electrical components replaced. Readjustment of the affected circuit may be necessary. Check Table 4-6 in the Calibration Procedure section of this manual for possible adjustment interaction.

## CORRECTIVE MAINTENANCE

### Introduction

Corrective maintenance consists of component replacement and instrument repair. Special techniques required to replace components in this instrument are given here.

### Maintenance Precautions

To reduce the possibility of personal injury or instrument damage, observe the following precautions.

1. Disconnect instrument from power source before removing or installing components.

2. Use care not to interconnect instrument grounds which may be at different potentials (cross grounding).

3. Do not use excessive heat when soldering. This can damage circuit boards and semiconductors.

### Static-Sensitive Components

**CAUTION**

*Static discharge can damage any semiconductor component in this instrument.*

This instrument contains electrical components that are susceptible to damage from static discharge. See Relative Susceptibility Table for various classes of semiconductors. Static voltages of 1 kV to 30 kV are common in unprotected environments.

Observe the following precautions to avoid damage:

1. Minimize handling of static-sensitive components.

2. Transport and store static-sensitive components or assemblies in their original containers, on a metal rail, or on conductive foam. Label any package that contains static-sensitive assemblies or components.

3. Discharge the static voltage from your body by wearing a wrist strap while handling these components. Servicing static-sensitive assemblies or components should be performed only at a static-free work station by qualified service personnel.

4. Nothing capable of generating or holding a static charge should be allowed on the work station surface.

5. Keep the component leads shorted together whenever possible.

6. Pick up components by the body, never by the leads.

7. Do not slide the components over any surface.

8. Avoid handling components in areas that have a floor or work-surface covering capable of generating a static charge.

9. Use a soldering iron that is connected to earth ground.

10. Use only special antistatic suction type or wick type desoldering tools.

**RELATIVE SUSCEPTIBILITY TO STATIC DISCHARGE DAMAGE**

| Semiconductor Classes | Relative Susceptibility Levels* |
|---|---|
| MOS or CMOS microcircuits or discretes, or linear microcircuits with MOS inputs. (Most Sensitive) | 1 |
| ECL | 2 |
| Schottky signal diodes | 3 |
| Schottky TTL | 4 |
| High-frequency bipolar transistors | 5 |
| JFETs | 6 |
| Linear microcircuits | 7 |
| Low-power Schottky TTL | 8 |
| TTL (Least Sensitive) | 9 |

*Voltage equivalent for levels:

1 = 100 to 500 V  4 = 500 V  7 = 400 to 1000 V (est.)
2 = 200 to 500 V  5 = 400 to 600 V  8 = 900 V
3 = 250 V  6 = 600 to 800 V  9 = 1200 V
(Voltage discharge from a 100 pF capacitor through a resistance of 100 ohms.)

## Obtaining Replacement Parts

**STANDARD PARTS.** Most electrical and mechanical parts can be obtained through your local Tektronix Field Office or representative. However, you should be able to obtain many of the standard electronic components from a local commercial source in your area. Before you purchase or order a part from a source other than Tektronix, Inc., please check the Replaceable Electrical Parts List for the proper value, rating, tolerance and description.

*NOTE*

*Physical size and shape of a component may affect instrument performance, particularly at high frequencies. Always use direct-replacement components, unless it is known that a substitute will not degrade instrument performance.*

**SPECIAL PARTS.** In addition to the standard electronic components, some special components are used in the 465B. These components are manufactured or selected by Tektronix, Inc. to meet specific performance requirements, or are manufactured for Tektronix, Inc. in accordance with our specifications (see Cross Index-Manufacturers Code Number to Manufacture in Replaceable Electrical Parts List for code numbers). Most of the mechanical parts used in this instrument have been manufactured by Tektronix, Inc. Order all special parts directly from your local Tektronix Field Office or representative.

**ORDERING PARTS.** When ordering replacement parts from Tektronix, Inc., it is imperative that all of the following information be included in order to ensure receiving the proper parts.

1. Instrument type (include modification or option numbers).

2. Instrument serial number.

3. A description of the part (if electrical, include the circuit number).

4. Tektronix part number.

## Soldering Techniques

**WARNING**

*Always disconnect the instrument from the power source before attempting to solder in the instrument.*

Ordinary 60/40 solder and a 35- to 40-watt pencil-type soldering iron can be used to accomplish the majority of the soldering. If a higher wattage-rating soldering iron is used on the etched circuit boards, excessive heat can cause the etched circuit wiring to separate from the board base material.

**CAUTION**

*The Vertical Preamplifier Attenuator circuit boards are made of material easily damaged by excessive heat. When soldering to these boards, do not use a soldering iron with a rating of more than approximately 15 watts. Avoid prolonged applications of heat to circuit-board connections. Use only isopropyl alcohol when cleaning this circuit board.*

The following technique should be used to replace a component on the circuit board. Most components can be replaced without removing the boards from the instrument.

1. Grip the component lead with long-nose pliers. Touch the soldering iron to the lead at the solder connection. Do not lay the iron directly on the board, since it may damage the board.

2. When the solder begins to melt, pull the lead out gently. This should leave a clean hole in the board. If not, the hole can be cleaned by reheating the solder and placing a sharp object such as a toothpick into the hole to clean it out. A vacuum-type desoldering tool can also be used for this purpose.

3. Bend the leads of the new component to fit the holes in the board. If the component is replaced while the board is mounted in the instrument, cut the leads so they will just protrude through the board. Insert the leads into the holes in the board so the component is firmly seated against the board (or as positioned originally). If it does not seat properly, heat the solder and gently press the component into place.

4. Touch the iron to the connection and apply a small amount of solder to make a firm solder joint. To protect heat-sensitive components, hold the lead between the component body and the solder joint with a pair of long-nose pliers or other heat sink.

5. Clip the excess lead that protrudes through the board (if not clipped in step 3).

6. Clean the area around the solder connection with a flux-remover solvent. Be careful not to remove information printed on the board.

When soldering to the ceramic strips in the instrument, a slightly larger soldering iron can be used. It is recommended that a solder containing about 3% silver be used when soldering to these strips to avoid destroying the bond to the ceramic material. This bond can be broken by repeated use of ordinary tin-lead solder or by the application of too much heat; however, occasional use of ordinary solder will not break the bond, if excessive heat is not applied.

If it becomes necessary to solder in the general area of any of the high-frequency contacts in the instrument, clean the contacts immediately upon completion of the soldering. Refer to the Switch Contacts paragraph in the Preventive Maintenance part of this section for recommended cleaners and procedures.

## Component Removal and Replacement

**WARNING**

*Always disconnect the instrument from the power source before attempting to replace components.*

**CIRCUIT BOARDS.** Occasionally it may be necessary to gain access to the reverse side of a circuit board or to remove one circuit board to gain access to another. The following procedures outline the necessary steps to facilitate instrument disassembly and reassembly. Most of the connections to the circuit boards in the instrument are made with pin connectors. However, some connections are soldered to the board. Observe the soldering precautions given under Soldering Techniques in this section.

**VERTICAL PREAMPLIFIER ASSEMBLY.** Remove and replace this assembly as follows:

1. Remove instrument wrap-around cabinet in the manner given under Cabinet Removal at the beginning of this section.

2. Loosen front setscrews in the Vertical POSITION control shaft couplers (0.050" Allen wrench required) and the VAR VOLTS/DIV control shaft couplers. Slide shafts out of the couplers and remove them from the instrument.

3. Disconnect the INVERT and 20 MHz BW LIMIT push-button extension shafts from the switch shafts. Insert a scribe or similar tool between the end of the white plastic shaft and the inside of the black plastic extension shaft, then pry gently. Extension shafts will snap back into position when reassembling.

4. Disconnect the following wires and cables:

a. Ten coaxial cables from the Preamplifier circuit board. Make a note of cable color codes to aid in proper installation during reassembly.

b. Unplug the delay-line connection from the end of the Preamplifier circuit board toward the rear of the instrument.

c. Locate the ground braid (near the High Voltage shield) connecting the Preamplifier circuit board to the Interface circuit board. Unsolder the end of the braid attached to the Preamplifier circuit board.

d. Unplug P1565, a three-wire connector near the middle of the Preamplifier circuit board.

e. Unplug P1505, an eight-wire connector near the rear of the Preamplifier circuit board.

5. Remove 10 screws from attenuator covers (five in each cover) and lift covers from attenuator assemblies.

6. Unsolder two resistors that connect from the Vertical Preamplifier circuit board to the Attenuator boards.

7. Remove six circuit board hold-down screws from the Preamplifier circuit board and remove board from the instrument.

8. To replace the Vertical Preamplifier circuit board, use the reverse of the removal steps.

**VERTICAL MODE SWITCH AND ATTENUATORS.** Remove and replace these assemblies as follows:

1. Loosen front setscrews in the Vertical POSITION control shaft couplers and the VAR VOLTS/DIV control shaft couplers. Slide shafts out of the couplers and remove them from the instrument.

2. Disconnect INVERT and 20 MHz BW LIMIT push-button extension shafts from the switch shafts. Insert a scribe or similar tool between the end of the white plastic shaft and the inside of the black plastic extension shaft, then pry gently. Extension shafts will snap back into position when reassembling.

3. Loosen six Vertical Preamplifier board hold-down screws (do not remove).

4. Remove knobs from the VOLTS/DIV switches. Loosen setscrews and pull to remove (requires a 1/16" Allen wrench).

5. Remove the AC-GND-DC lever switch knobs by pulling them straight off.

6. Unplug both input coupling capacitors from the board. Bend capacitors out of the way, leaving the soldered lead attached.

7. Remove four nuts securing the attenuator chassis to the instrument front casting (1/4" nutdriver required).

8. Disconnect the following wires and connectors:

a. P5232, a three-wire connector (to the Interface circuit board).

b. P5236 and P5235, two-wire connectors (to the VAR VOLTS/DIV potentiometers).

c. P5036, a six-wire connector (to the CH 1 and CH 2 VOLTS/DIV UNCAL LED and the 20 MHz BW LIMIT LED).

d. P5001, an eight-wire connector at rear of Vertical Mode Switch circuit board (to the Preamplifier circuit board).

e. P5056 and P5265, three-wire connectors (to the Probe Coding boards).

f. Single red lead near the stand-off post at the rear of the Vertical Mode Switch circuit board.

9. Remove securing screw and hexagonal stand-off post from the rear of the Vertical Mode Switch circuit board.

10. Remove Vertical Mode Switch circuit board from the instrument.

11. To reinstall the Vertical Mode Switch and attenuators, use the reverse of the removal steps.

**TRIGGER GENERATOR AND SWEEP LOGIC BOARD.** Remove and replace this board as follows:

1. Disconnect the following cables and wires:

a. Eight coaxial cables from component side of the Trigger Generator and Sweep Logic circuit board. Make note of cable color codes to aid in proper installation when reassembling.

b. P7010 and P7305, five-wire connectors (to the A and B TRIGGER SLOPE controls).

c. P7204, a four-wire connector (to TRIG and READY LED). Guide the connector through the slotted hole when removing the circuit board.

d. P7105, a two-wire connector (to POWER LED).



@

e. P7052, a three-wire connector near top center of Trigger Generator and Sweep Logic circuit board.

f. Unsolder the wires from the External Trigger Input connectors.

2. Remove POWER-switch-actuator rod from the plastic holder on the switch. Pry rod out of the holder with a small flat-bladed screwdriver and remove rod from the instrument.

3. Remove POWER switch bracket from the circuit board (3/16" wrench or nutdriver required). The white plastic circuit board support on back side of board may fall off when circuit board hold-down screws are removed; save it for reinstallation.

4. Remove five circuit board hold-down screws (Phillips screwdriver required) from the board (two at rear, two at front, and one in a post at top center of the board). Also remove post (3/16" wrench or nutdriver required).

5. Unplug Trigger Generator and Sweep Logic circuit board by prying Trigger board away from Interface board at the two white interboard connectors (at bottom edge of the Trigger board).

6. Move Trigger board to the rear until Trigger switches clear the front casting to remove the assembly from the instrument. Exercise caution to avoid damaging the connector pins on the Interface board.

7. To reinstall the Trigger Generator and Sweep Logic circuit board, reverse the order of the removal steps. If indexing of the Trigger switches was disturbed, a series of alignment steps will be required to return the indexing to its correct position. After each adjustment to the switch positioning, the board must be reinstalled to check out the switch operation.

**SWEEP TIMING CIRCUIT BOARD.** Remove and replace this board as follows:

1. Disconnect the following wires:

a. P6014, a two-wire connector (to main cable harness).

b. P6002, a three-wire connector (to DELAY TIME POSITION potentiometer).

c. P6001, a four-wire connector (to X10 MAG and UNCAL LED).

2. Remove VAR TIME/DIV, A TIME/DIV, and B TIME/DIV knobs (1/16" and 5/64" Allen wrenches required). The VAR knob has one externally accessible Allen setscrew, and the large gray knob has two externally accessible Allen setscrews. The clear plastic skirt knob has two Allen setscrews which are accessible from behind the front panel casting. Black spacing rings may fall out; save them for reinstallation.

3. Remove the board hold-down screw and the hexagonal rod from the Sweep Timing circuit board (Phillips screwdriver and 3/16" wrench or nutdriver required).

4. Use a flat-blade screwdriver to pry the Timing board away from the Interface board. Gently pull away the corner of the Interface board near the B External Trigger input connector and simultaneously lift up on the Timing board near the rear to fully disengage connector pins from the Interface board.

5. To reinstall Timing board, reverse the order of the removal steps.

For Service Manuals Contact
MAURITRON TECHNICAL SERVICES
8 Cherry Tree Rd, Chinnor
Oxon OX9 4QY
Tel:- 01844-351694 Fax:- 01844-352554
Email:- enquiries@mauritron.co.uk

**VERTICAL OUTPUT BOARD REMOVAL.** Remove and replace this board as follows:

1. Unplug P4295, a six-wire connector at the top front corner of Vertical Output board.

2. Disconnect two wires from the crt neck. (Use long-nose pliers and gently pull connectors from the pins on the crt neck. Pull straight away from the crt neck to avoid putting a side strain on the metal-to-glass neck-pin seal.)

3. Unplug the delay-line terminal from the top right corner of the board.

4. Remove the integrated circuit mounting nut from main chassis. Use a 1/4" open-end wrench to loosen the nut.

5. Remove two circuit board hold-down screws along the top edge of the board and remove Vertical Output circuit board from the instrument. Save the nylon posts (located behind front edge of board) for reinstallation.

6. To reinstall Vertical Output circuit board, reverse the order of the removal steps.

**MAIN INTERFACE BOARD REMOVAL.** If repair is necessary on reverse side of the Main Interface board, it is possible to gain access to that area by removal of one or two circuit boards as previously outlined. Consider this first before proceeding with Main Interface board removal procedure. (There is no reason to remove the Main Interface board except for exchange.)

**CAUTION**

*If the Main Interface board becomes defective, it is recommended that your local Tektronix Field Office or representative be contacted to arrange instrument repair at a Tektronix Service Center.*

The Main Interface board can be removed as follows:

1. Remove Trigger Generator and Sweep Logic board as previously outlined.

2. Position the instrument with the front to your right and the Interface board facing you.

3. Remove the high-voltage shield from Interface board.

4. Remove BEAM FIND and X10 MAG push-button extension shafts. Insert a scribe or small screwdriver between the end of the white plastic switch shaft and the inside of the black plastic extension shaft, then pry gently.

5. Remove INTENSITY, FOCUS, SCALE ILLUM, ASTIG, and TRACE ROTATION control extension shafts. Loosen front setscrew in each coupling with a 0.050" Allen wrench.

6. Disconnect twelve ribbon- or wire-cable connectors from Main Interface board and note the location, quantity, and color of wires for each plug for reassambly reference:

a. P4009, a three-wire connector at the top left corner of the board (to Q14009).

b. P4035, a four-wire connector near top center of the board (to crt socket).

c. P4069, a two-wire connector near the INTENSITY potentiometer at top center of the board (to the Fan board).

d. P4057, a three-wire connector near the INTENSITY potentiometer at top center of the board (to Vertical Mode Switch).

e. P4061, a three-wire connector near the INTENSITY potentiometer at top center of the board (to Vertical Preamp board).

f. P4058, a six-wire connector near the INTENSITY potentiometer at top center of the board (to Vertical Output board).

g. P4086, a two-wire connector near Q4190 (to graticule lights).

h. P4165, a two-wire connector near the front of the INTENSITY potentiometer (Y-Axis).

i. P4176, a two-wire connector near the TRACE ROTATION potentiometer (to crt).

j. P4398, a six-wire connector from the TRACE SEP and B INTENSITY potentiometers, at the front of the board.

k. P4498, a six-wire connector from the TRACE SEP and HOLDOFF potentiometers, at the front of the board.

l. P4561, a three-wire connector near the bottom center of the board (from the HOLDOFF control).

7. Unsolder the CALIBRATOR loop from Main Interface board.

8. Unsolder five wires from Main Interface board and confirm each wire's color and location in the following list for reassembly reference (high-voltage wires to crt socket):

a. Wire to the one-notch ceramic strip is white with a yellow stripe.

b. Wire to the −2450 volts test point (TP4129) is white with a red stripe.

c. Wire to center notch on the three-notch ceramic strip is white with an orange stripe.

d. Lowest of a pair of wires between the large high-voltage capacitors is white with brown and yellow stripes.

e. Upper wire of a pair of wires between the large high-voltage capacitors is white with a brown stripe.

9. Disconnect horizontal deflection plate leads at the crt. This requires a pair of long-nose pliers for best removal or reinstallation (pull connectors straight out from pins to avoid strain on metal-to-glass neck-pin seal).

10. Unplug five connectors from Main Interface board. Confirm each wire's color and location in the following list for reassembly reference:

a. J4325, white with black and brown stripes, from near the rear middle of the board.

b. J4387, white with a red stripe, from near the front of the board.

c. J4385, white with black and red stripes, from near the front of the board.

d. J4388, white with a blue stripe, from near the front of the board.

e. J4475, white with an orange stripe, from between the interboard connectors (to the Sweep Timing circuit board).

11. Unsolder one wire from near the left middle of the board (under cable harness).

12. Remove power transistor mounting screw from Q4102, Q4301, and Q4401.

13. Remove mounting screw from transistor Q4312 near the lower rear corner of the board.

14. Remove mounting screw from transistor Q4190 near the top right corner of the board.

15. Remote four hexagonal posts that stand-off the high-voltage shield. Use a 3/16" nutdriver.

16. Remove seven Main Interface board mounting screws. A Phillips screwdriver is required.

**WARNING**

*The crt anode and the output terminal of high-voltage multiplier may retain a high-voltage charge after the instrument is turned off. To avoid electrical shock, ground both the output terminal of the multiplier and the crt high-voltage anode lead to chassis ground.*

17. Disconnect crt anode-lead plug from the high-voltage multiplier jack. Ground this lead to the instrument main chassis to remove any stored charge. Insert a medium-size screwdriver tip between the multiplier jack body and the hold down spring clip. Pry the multiplier jack out of the spring clip.

18. Separate Main Interface circuit board from the instrument chassis, using care to prevent damage to components or wiring. Carefully thread interconnecting cables through the board and chassis, as necessary, to avoid strain on any cable. Let the board pivot on power-transformer leads that are still connected to the board.

*NOTE*

*You can now perform repairs on the reverse side of the Main Interface board, if repair is intended. To reinstall the board, reverse the order of the removal steps. If you intend to replace the Main Interface circuit board, continue with this procedure.*

19. Unsolder power-transformer wires from Main Interface board. Confirm each wire's color and location in Figure 5-4. To facilitate reassembly, record any exceptions to this procedure.

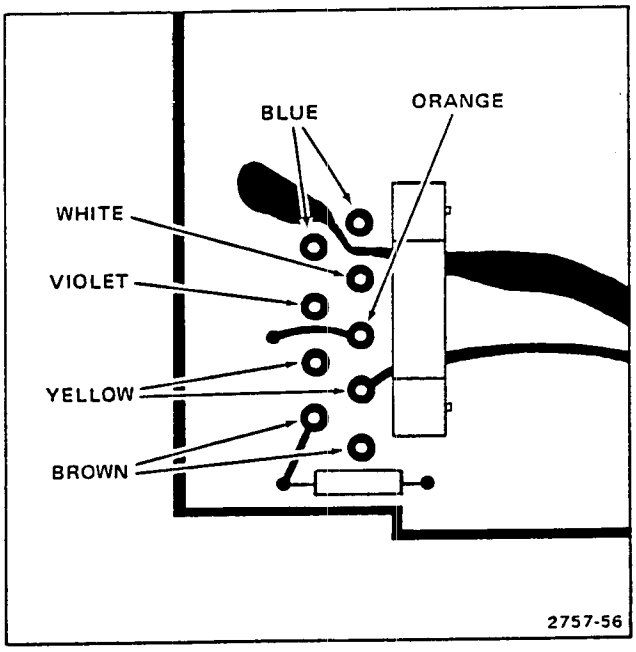


**Figure 5-4. Locations of power transformer secondary wires.**

20. Unsolder blue power-cord wire from the stand-off insulator near power transformer secondary wires. Feed wire through hole in the board.

21. Remove Main Interface board from the chassis, using care to prevent strain on any of the wires.

22. To facilitate reinstallation, remove solder from the holes in the circuit-board wire-terminal pads, if wires were removed in this procedure.

To reinstall the Main Interface circuit board, reverse the order of the removal steps.

*NOTE*

*All of the mounted components are not supplied with a replacement Main Interface board. It will be necessary to exchange some components from the old board to the new board or new parts must be ordered.*

**POWER TRANSFORMER.** If the power transformer becomes defective, be sure to replace only with a direct replacement Tektronix transformer. After the transformer is replaced, check the performance of the complete instrument. Remove the transformer as follows:

1. Unsolder the power cord from the Interface board, the Regulating Range Selector Assembly, and the solder lug on the rear subpanel.

2. Remove small blue panel from the rear panel of the instrument (short screw is at the top, and the long screw is at the left side). It will be necessary to remove rear ring assembly, as for cabinet removal (see Figure 5-1) and the Regulating Range Selector cover to allow removal of the panel.

3. Disconnect actuating shaft from the POWER switch coupler and remove shaft from the instrument. Be careful not to damage switch coupler.

4. Remove POWER switch mounting bracket from the Trigger board (3/16" wrench or nutdriver required).

5. Unsolder transformer leads from the Interface board and the solder lug on the rear subpanel. Note the wire color codes to facilitate correct reinstallation (see Figure 5-4).

6. Remove transformer leads from the Regulating Range Selector Assembly. It will be necessary to use a special pin removing tool available from Tektronix, Inc. (refer to Maintenance Aids information at end of this section). It is only necessary to use this tool to remove the transformer leads from the Selector Assembly. The leads may be reinstalled by simply pushing them into place. Note wire color codes to facilitate correct reinstallation.

7. Remove transformer bracket mounting hardware. This includes two screws on the Trigger board, one screw on the Interface board, two nuts on the U-channel (one on the transformer side and one on the crt side), and two screws and nuts on the rear subpanel.

8. Thoroughly loosen Trigger board, then lift the transformer assembly partially out until thermal cutoff retaining screws can be removed. Remove these retaining screws with a Phillips screwdriver and lift transformer assembly out of the instrument.

9. Remove thermal cutout and POWER switch from old transformer and install on new transformer. Note wire color codes to facilitate correct installation.

10. Install new transformer assembly in the instrument reversing the order of removal steps.

**CATHODE RAY TUBE (CRT).** Remove and replace the crt as follows:

**WARNING**

*Use care when handling a crt. Protective clothing and safety glasses should be worn. Avoid striking it on any object which might cause it to crack or implode. When storing a crt, place it in a protective carton or set it face down on a smooth surface in a protective location with a soft mat under the faceplate to protect it from scratches.*

1. Remove instrument wrap around cabinet in the manner given under Cabinet Removal at the beginning of this section.

2. Remove plastic bezel and filter from the front of the crt (held with four screws).

3. Remove rear cover (held by two flat-head screws).

4. Remove bell-shaped cover to expose crt socket (held by two screws).

5. Unplug crt socket.

6. Remove the two vertical deflection pin connectors from the left side of the crt neck. (Use long-nose pliers and pull connectors straight off the crt neck to avoid strain on the metal-to-glass neck-pin seal.)

7. Set the instrument on its left side (Vertical Preamp board side).

8. Remove horizontal deflection pin connectors from bottom of the crt neck (accessible through a hole in the Interface board). (Refer to step 6 for removal method.)

9. Position the instrument so the top is accessible.

**WARNING**

*The crt anode and the output terminal of high-voltage multiplier may retain a high-voltage charge after the instrument is turned off. To avoid electrical shock, ground both the output terminal of the multiplier and the crt high-voltage anode lead to chassis ground.*

10. Locate anode lead connector that is held in place by a metal spring clip fastened to the chassis. Pull the top portion of the anode lead out of the connector (where the connector plugs together, just above the metal spring clip) and discharge the metal tip to the chassis.

11. Holding one hand on the crt face, push slowly on the crt base with the other hand. Guide the anode onnector through the crt shield while slowly pulling the crt out of the instrument. The plastic corner pads may fall out during removal; save them for reinstallation.

12. Reverse the above procedure to install a crt. Observe the following precautions:

a. Be sure to guide anode lead through the hole in the crt shield while pushing crt into the instrument.

b. Be sure plastic corner pads are securely seated.

c. Be sure plastic centering ring firmly centers the crt neck. Reposition the ring as necessary.

**HIGH VOLTAGE MULTIPLIER.** Remove and replace the High Voltage Multiplier as follows:

1. Remove Vertical Preamplifier board and crt as previously described.

2. Slide the round part of the crt shield to the rear about two inches.

3. Remove high voltage shield (held on by four screws). Note position of the cabinet grounding clip for reassembly reference.

4. Remove four 3/16" stand-off posts to which the high voltage shield is secured.

5. Remove mounting screw from Q4102 and Q4301 at the rear of the Interface board.

6. Remove circuit board hold-down screw just forward of P4165 on the Interface board.

7. Remove the shield from the high voltage transformer and high voltage multiplier (shield held by three screws).

8. Unsolder black wire (between the High Voltage Multiplier and the Interface board) from the Interface board.

9. Unsolder the diode and the wire from the post on the High Voltage Multiplier.

10. Remove two nylon nuts securing the High Voltage Multiplier to the Interface board.

11. Remove High Voltage Multiplier (carefully pry up on the Interface board as necessary to facilitate removal).

12. Reverse above procedure to install the High Voltage Multiplier.

**TRANSISTORS AND INTEGRATED CIRCUITS.** Transistors and IC (integrated circuits) should not be replaced unless they are actually defective. If removed from their sockets during routine maintenance, return them to their original sockets. Unnecessary replacement or switching of semiconductor devices may affect the

adjustment of the instrument. When a transistor is replaced, check the operation of the part of the instrument that may be affected.

Any replacement component should be of the original type or a direct replacement. Bend the leads to fit the socket and cut the leads to the same length as on the component being replaced. See Figure 8-1 for basing diagrams.

To remove the 14-, 16-, and 20-pin integrated circuits, pull slowly and evenly on both ends of the device. Try to avoid having one end of the integrated circuit disengage from the socket before the other, since this may damage the pins.

**WARNING**

*Handle silicone grease with care. Avoid getting silicone grease in the eyes. Wash hands thoroughly after use.*

**WARNING**

*Voltages are present on the exterior surface of the chassis-mounted power supply transistors if power is applied to the instrument and the POWER switch in on.*

The chassis-mounted power supply transistors and their mounting bolts are insulated from the chassis. In addition, silicone grease is used to increase heat transfer capabilities. Reinstall the insulators and replace the silicone grease when replacing these transistors. The grease should be applied to both sides of the mica insulators and should be applied to the bottom side of the transistor, where it comes in contact with the insulator.

*NOTE*

*After replacing a power transistor, check that the collector is not shorted to ground before applying power.*

**INTERCONNECTING PINS.** Two methods of interconnection are used in this instrument to connect the circuit boards with other boards and components. When the interconnection is made with a coaxial cable, a special end-lead connector plugs into a socket on the board. Other interconnections are made with a pin soldered onto the board. Two types of mating connections are used for these interconnecting pins. If the mating connector is on the end of a lead, an end-lead pin connector is used which mates with the interconnecting pin. The following information provides the replacement procedure for the various types of interconnecting methods:

**Coaxial-Type End-Lead Connectors.** Replacement of the coaxial-type end-lead connectors requires special tools and techniques; only experienced maintenance personnel should attempt replacement of these connectors. It is recommended that the cable or wiring harness be replaced as a unit. For cable or wiring harness part numbers, see the Replaceable Mechanical Parts List. An alternative solution is to refer the replacement of the defective connector to your local Tektronix Field Office or representative.

*NOTE*

*A circuit-board pin-replacement kit including necessary tools, instructions, and replacement pins is available from Tektronix, Inc. (see Maintenance Aids information at the end of this section).*

**Circuit Board Pins.** To replace a pin which is mounted on a circuit board, first disconnect any pin connectors, then, unsolder the damaged pin and pull it out of the circuit board with a pair of pliers. Be careful not to damage the wiring on the board with too much heat. Ream out the hole in the circuit board with a 0.031" drill bit. Remove the ferrule from the new interconnecting pin and press the new pin into the hole in the circuit board. Position the pin in the same manner as the old pin. Then solder the pin on both sides of the circuit board. If the old pin was bent at an angle to mate with a connector, carefully bend the new pin to match the associated pins.

**Circuit Board Pin Sockets.** The pin sockets on the circuit boards are soldered to the rear of the board. To replace one of these sockets, first unsolder the pin (use a vacuum-type desoldering tool to remove excess solder). Then straighten the tabs on the socket and remove it from the hole in the board. Place the new socket in the circuit board hole and press the tabs down against the board. Solder the tabs of the socket to the circuit board; be careful not to get solder into the socket.

*NOTE*

*The spring tension of the pin sockets ensures a good connection between the circuit board and the pin. This spring tension can be destroyed by using the pin sockets set as a connecting point for spring-loaded probe tips, alligator clips, or other devices.*

**End-Lead Pin Connectors.** The pin connectors used to connect the wires to the interconnecting pins are factory assembled. They consist of machine-installed pin connec-

tors mounted in plastic holders. The plastic holders are easily replaced as individual items; but if the connectors are faulty, the entire cable assembly should be replaced. Individual pin connectors are listed in the parts list, but special tools are required for installation.

When pin connectors are grouped together and mounted in a plastic holder, these connectors are removed and installed as a multi-pin connector. To provide correct orientation of this multi-pin connector when it is replaced, an arrow is stamped on the circuit board, and a matching arrow is molded into the plastic housing of the multi-pin connector. Be sure these arrows are aligned when the multi-pin connector is reinstalled. If the individual end-lead pin connectors are removed from the plastic holder, note the color of the individual wires to facilitate replacement.

**CERAMIC TERMINAL STRIPS.** Replacement strips (including studs) and spacers are supplied under separate part numbers. However, the old spacers may be reused if they are not damaged. The applicable Tektronix part numbers for the ceramic strips and spacers used in this instrument are given in the Replaceable Mechanical Parts list.

Remove ceramic terminal strips as follows:

1. Unsolder all components and connections on the strip. To aid in replacing the strip, it may be advisable to mark each lead or draw a sketch to show location of the components and connections.

2. Pry or pull the damaged strip from the chassis.

3. If the spacers come out with the strip, remove them from the stud pins for use on the new strip (spacers should be replaced if they are damaged).

Replace ceramic terminal strips as follows:

1. Place the spacers in the chassis holes.

2. Carefully press the studs of the strip into the spacers until they are completely seated.

3. If the stud extends through the spacers, cut off the excess.

4. Replace all components and connections. Observe the soldering precautions under Soldering Techniques in this section.

## Readjustment After Repair

After any electrical component has been replaced, the adjustments for that particular circuit should be checked, as well as the adjustment of other closely related circuits. Since the power supply affects all circuits, adjustment of the entire instrument should be checked if work has been done in the power supply or if the transformer has been replaced.

## Instrument Repackaging

Should reshipment become necessary, reuse the carton in which your instrument was shipped. If the original packaging is unfit for use or is not available, repackage the instrument as follows:

1. Obtain a carton of corrugated cardboard having inside dimensions of no less than six inches more than the instrument dimensions; this will allow for cushioning. Use a carton having a test strength of at least 275 pounds.

2. Surround the instrument with polyethylene sheeting to protect the finish and prevent packing material from entering the instrument.

3. Cushion the instrument on all sides by tightly packing dunnage or urethane foam between carton and instrument, allowing three inches on all sides.

4. Seal carton with shipping tape or industrial stapler.

## Required Reshipment Information

If the instrument is to be shipped to a Tektronix Service Center for service or repair, attach a tag containing the following information:

1. Owner's name and address, with the name of an individual at your firm who can be contacted.

2. Complete instrument serial number.

3. Description of the services required.

## MAINTENANCE AIDS

The following maintenance aids include items required for some maintenance procedures in this instrument. Equivalent products may be substituted for examples given providing characteristics are similar.

| Description | Specifications | Use | Example |
|---|---|---|---|
| 1. Soldering iron | 15 Watt | General soldering and unsoldering | ANTEX PRECISION Model C |
| 2. Screwdriver | Phillips #1 tip | Assembly and Disassembly | Xcelite Model X108 |
| 3. Screwdriver | Phillips #2 tip | Assembly and Disassembly | Xcelite Model X102 |
| 4. Screwdriver | Three-inch shaft; 3/32" flat bit | General | Xcelite R3323 |
| 5. Torque Screw-driver | 1.5 inch-pounds | FUNCTION switch assembly | Sturtevant-Richmont Torque Products Model PM-5 Roto-Torq |
| 6. Nutdrivers | 1/4", 5/16" 3/8", 7/16" | General | Xcelite #8, #10, #12, & #14 |
| 7. Open End Wrench | 1/4" | General | |
| 8. Allen Wrenches | 1/16", 5/64", 0.050" | Assembly and Disassembly | |
| 9. Solder Wick | | Unsoldering | Hex Wik #887-10 |
| 10. Lubricant | Versilube | FUNCTION switch lubrication | Tektronix Part Number 006-1353-00 |
| 11. Spray Cleaner | No Noise | FUNCTION switch pad cleaning | Tektronix Part Number 006-0442-00 or -02 |
| 12. Air Filter Adhesive | | Coat air filter after cleaning | Tektronix Part Number 006-0580-00 |
| 13. Pin Removing Tool | | Remove leads from Regulating Range Selector Assembly | Tektronix Part Number 003-0707-00 |
| 14. Circuit Board Pin Replacement Kit | | Replace Circuit board connector pins | Tektronix Part Number 040-0542-00 |



@

**CAUTION**

*Before using any test equipment to make measurements on static-sensitive components or assemblies, be certain that any voltage or current supplied by the test equipment does not exceed the limits of the component to be tested.*

**Table 5-2**

**SUGGESTED TROUBLESHOOTING EQUIPMENT**

| Equipment | Minimum Specification | Usage | Examples |
|---|---|---|---|
| 1. Semiconductor Tester | Dynamic type tester. Measure reverse breakdown voltages up to at least 400 V. | Test Semiconductors. | a. TEKTRONIX 576 Curve Tracer.<br>b. TEKTRONIX 577 (D1 or D2) Curve Tracer with 177 Test Fixture |
| 2. Test Oscilloscope with 10X voltage probe | Frequency response, dc to at least 100 MHz; deflection factor, 5 mV to 5 V/div; input impedance, 1 MΩ, 20 pf; sweep rate, 0.5 s to 0.02 μs/div. | Check operating wave- | TEKTRONIX 465B Oscilloscope with included 10X probe |
| 3. Multimeter | Digital multimeter. Voltmeter input impedance, 10 MΩ range 0 to 150 volts; voltage accuracy, within 0.15%, display 4 1/2 digits. Ohmmeter, 0 to 20 MΩ. | Check voltages and general troubleshooting. | a. TEKTRONIX DM 501 Digital Multimeter[a]<br>b. TEKTRONIX 465B Oscilloscope with DM44 Option |
| 4. Variable Autotransformer | Variable from 0 to 140 V, 1.2 A. Equipped with 3-wire power cord, plug, and receptacle. | Vary input line voltage when troubleshooting the power supply. | General Radio W8MT3VM or W10MT3W Metered Variac Autotransformer |

[a]**Requires a TM 500-Series power module.**

# OPTIONS

## GENERAL OPTION INFORMATION

Your instrument may be equipped with one or more options. This section describes those options and provides required support documentation. Each Option part of this section is complete and supplies all the necessary information for operation and adjustment of the instrument. The Electrical and Mechanical Replaceable Parts list for each option are included at the end of the discussion of that option.

**Index to Options Described in this section**


| | Page |
|---|---|
| Option 04 | 6-3 |
| Option 05 | 6-5 |
| Option 07* | 6-23 |
| Option 78 | 6-39 |


*Option 07 is not available on instruments equipped with the DM44 Digital Multimeter.

# OPTION 04
# EMC ENVIRONMENTAL

## INTRODUCTION

This section describes the features of Option 04 applicable to the 465B Oscilloscope. Circuitry in the instrument is modified to meet additional conducted and radiated interference requirements over the frequency range of 150 kHz to 25 MHz (conducted) and 150 kHz to 1 GHz (radiated).

The following changes are made to the standard instrument circuitry to meet the additional specification requirements. Figure 6-1 reflects the Option 04 instrument configuration.

EMI filter FL14500 is added in series with the input power cord.

A cathode-ray tube mesh filter is installed to minimize crt faceplate radiation.

Four signal-output bnc connectors on the rear plenum chamber are changed to a type that improves shielding of the connected signal leads.

Capacitors are added across the transformer secondary windings.

For Service Manuals Contact
MAURITRON TECHNICAL SERVICES
8 Cherry Tree Rd, Chinnor
Oxon OX9 4QY
Tel:- 01844-351694 Fax:- 01844-352554
Email:- enquiries@mauritron.co.uk

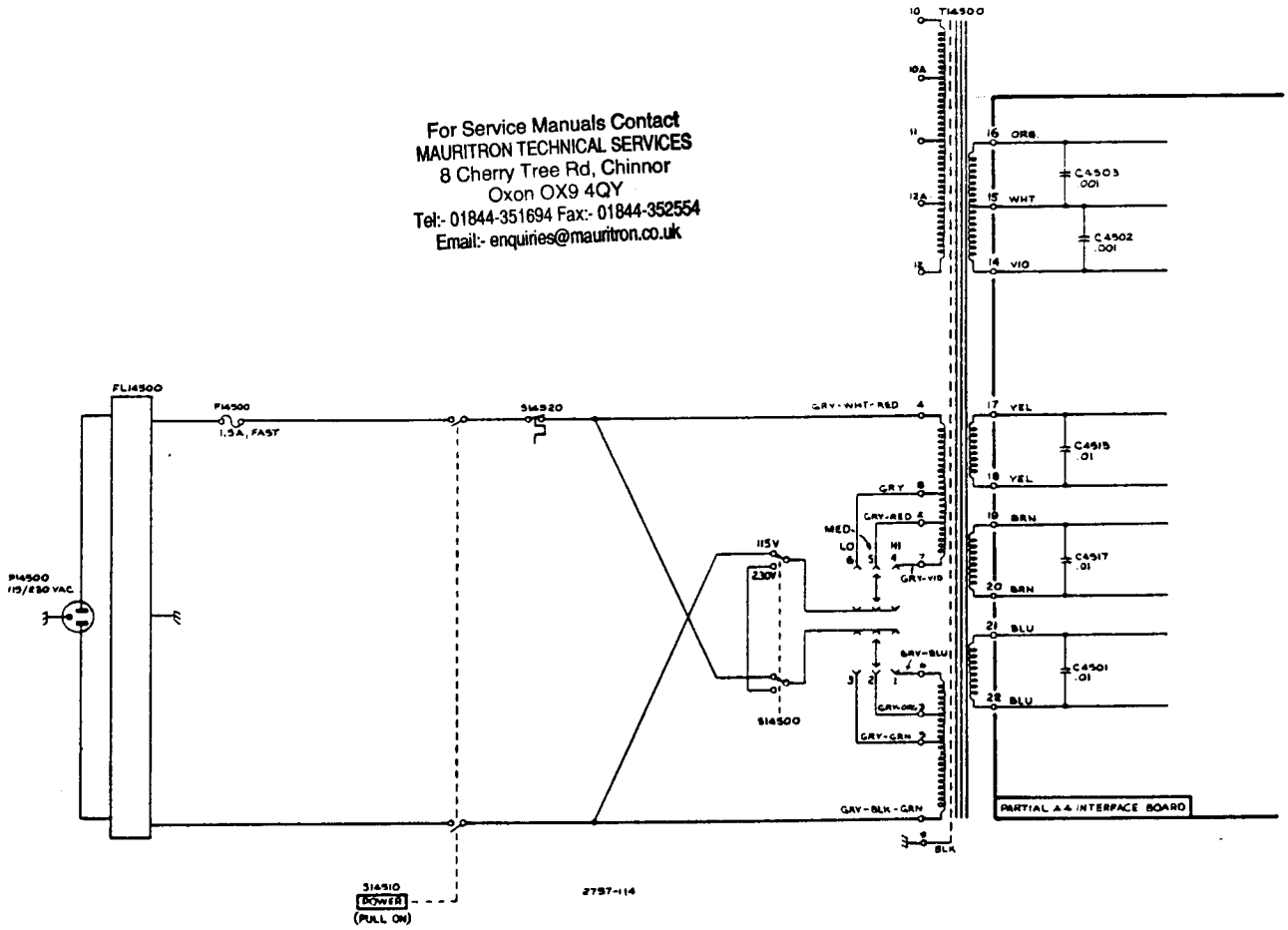


Figure 6-1. 465B Option 04 primary winding with power-line filter.

## ELECTRICAL

| Component No. | Tektronix Part No. | Serial/Model No. Eff | Dscont | Name & Description | Mfr Code | Mfr Part Number |
|---|---|---|---|---|---|---|
| | | | | CHANGES FROM STANDARD 465B WHEN OPTION 4 IS ADDED | | |
| (CHANGE TO): | | | | | | |
| A4 | 670-5996-01 | B010100 | B033189 | CKT BOARD ASSY:INTERFACE | 80009 | 670-5996-01 |
| A4 | 670-5996-03 | B033190 | | CKT BOARD ASSY:INTERFACE | 80009 | 670-5996-03 |
| A4C4501 | 283-0003-00 | | | CAP.,FXD,CER DI:0.01UF,+80-20%,150V | 72982 | 855-558Z5U-103Z |
| A4C4513 | 283-0003-00 | | | CAP.,FXD,CER DI:0.01UF,+80-20%,150V | 72982 | 855-558Z5U-103Z |
| A4C4517 | 283-0003-00 | | | CAP.,FXD,CER DI:0.01UF,+80-20%,150V | 72982 | 855-558Z5U-103Z |
| (ADD): | | | | | | |
| A4C4502 | 283-0000-00 | | | CAP.,FXD,CER DI:0.001UF,+100-0%,500V | 72982 | 831-516E102P |
| A4C4503 | 283-0000-00 | | | CAP.,FXD,CER DI:0.001UF,+100-0%,500V | 72982 | 831-516E102P |
| A4R4260 | 315-0223-00 | XB011250 | | RES.,FXD,CMPSN:22K OHM,5%,0.25W | 01121 | CB2235 |

## MECHANICAL

| Fig. & Index No. | Tektronix Part No. | Serial/Model No. Eff | Dscont | Qty | 1 2 3 4 5 | Name & Description | Mfr Code | Mfr Part Number |
|---|---|---|---|---|---|---|---|---|
| A4 | ----- ----- | | | 1 | | CKT BOARD ASSY:INTERFACE | | |
| | 131-0382-00 | | | 1 | | . TERMINAL,STUD:0.812 L,INSULATED | 71279 | 572-4822-01-05-1 |
| | 210-0586-00 | | | 1 | | . NUT,PLAIN,EXT W:4-40 X 0.25 INCH,STL | 78189 | 211-041800-00 |
| | | | | | | CHASSIS PARTS | | |
| | 119-0376-01 | | | 1 | | FILTER,RAD INT:2 X 3A,250V,400 HZ | 80009 | 119-0376-01 |
| | | | | | | (ATTACHING PARTS) | | |
| | 211-0038-00 | | | 1 | | SCREW,MACHINE:4-40 X 0.312"100 DEG,FLH STL | 83385 | OBD |
| | 210-0586-00 | | | 1 | | NUT,PLAIN,EXT W:4-40 X 0.25 INCH,STL | 78189 | 211-041800-00 |
| | | | | | | - - - * - - - | | |
| | 131-0707-00 | | | 1 | | CONNECTOR,TERM.:22-26 AWG,BRS& CU BE GOLD | 22526 | 47439 |
| | 131-0708-00 | | | 1 | | CONTACT,ELEC:0.48"L,28-32 AWG WIRE | 22526 | 47437 |
| | 131-1310-00 | | | 1 | | CONTACT,ELEC:MESH FILTER GROUND | 80009 | 131-1310-00 |
| | 131-1315-01 | | | 4 | | CONN,RCPT,ELEC:BNC,FEMALE | 24931 | 28JR235-1 |
| | 179-2162-00 | | | 1 | | WIRING HARNESS:OPTION NO.4 | 80009 | 179-2162-00 |
| | 210-0774-00 | | | 2 | | EYELET,METALLIC:0.152 OD X 0.245 INCH L,BRS | 80009 | 210-0774-00 |
| | 210-0775-00 | | | 2 | | EYELET,METALLIC:0.126 OD X 0.23 INCH L,BRS | 80009 | 210-0775-00 |
| | 378-0726-00 | | | 1 | | FILTER,MESH:EMI | 80009 | 378-0726-00 |
| | 334-3379-00 | | | 1 | | MARKER,IDENT:MARKED GROUND SYMBOL | 80009 | 334-3379-00 |
| | 348-0239-00 | | | 1 | | GROMMET,PLASTIC:U SHAPED | 80009 | 348-0239-00 |
| | 179-2739-00 | | | 1 | | WIRING HARNESS:MAIN | 80009 | 179-2739-00 |
| | 195-0529-00 | | | 1 | | LEAD,ELECTRICAL:18 AWG,2.0 L | 80009 | 195-0529-00 |

# OPTION 05
# TV SYNC SEPARATOR

## INTRODUCTION

Option 05, when installed in the 465B Oscilloscope, adds a TV Sync Separator and other changes to provide stable sweep triggering from composite video waveforms. Two positions are added to the A TRIGGER COUPLING switch: TV FIELD and TV LINE. When these positions are selected, the A Sweep may be triggered at the field or line rate with the A TRIGGER LEVEL control. A TV LINE position is also added to the B TRIGGER SOURCE switch. In this position, the B Sweep may be triggered at the line rate. The Option 05 circuitry accepts sync-positive or sync-negative video from Channel 1, Channel 2, or external input. Recognition circuits accommodate 405-, 525-, and 625-line, 50 or 60 Hz field-rate broadcast systems and are compatible with closed-circuit systems with up to 1201-line, 60 Hz field rates.

Option 05 provides the instrument with front-panel selection of additional processing of trigger signals, to facilitate observation and measurement of composite video and related television waveforms. Added circuits provide amplification, selectable polarity inversion, clipping, and vertical-sync recognition. Outputs of vertical and horizontal (field and line rate) triggers are connected to the A TRIGGER COUPLING switch, and horizontal (line rate) triggers are connected to the B TRIGGER SOURCE switch.

When the A TRIGGER COUPLING switch is set to either TV FIELD or TV LINE, the A TRIGGER SOURCE switch selects the source of signals to be processed in the Sync Separator. This includes NORM (composite vertical signal), CH 1, CH 2, EXT, or EXT/10 (LINE source is not a usable function with TV FIELD or TV LINE coupling).

The Option 05 circuitry may be operated from normal sync-negative composite video (with the A TRIGGER SLOPE switch at −) or from inverted video (SLOPE switch set to +). This applies to most standard broadcast systems using from 405 to 819 lines, 50 or 60 Hz field rates, or to closed-circuit systems using up to 1201 lines and 60 Hz field.

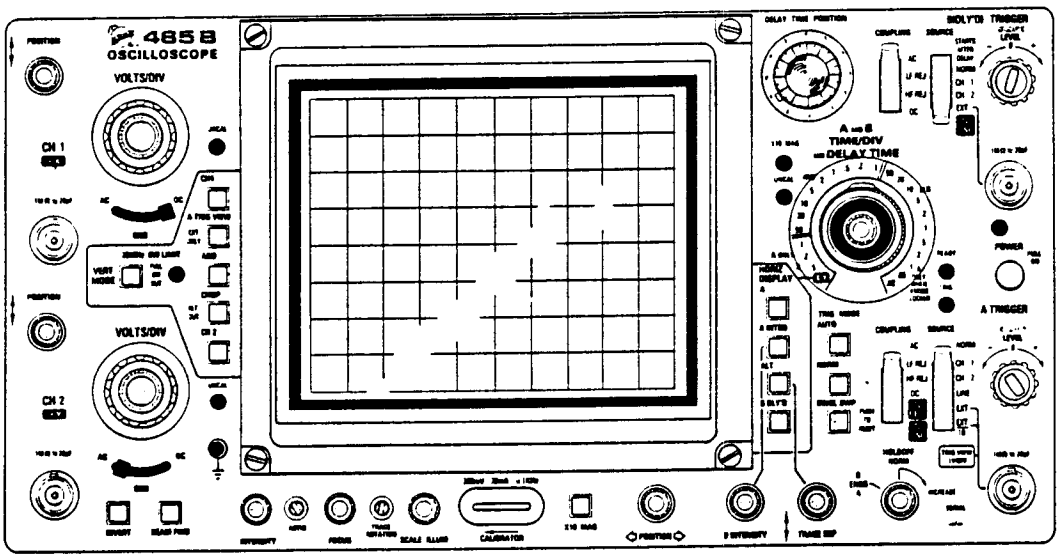


Figure 6-2. 465B Oscilloscope with Option 05.

When the A TRIGGER COUPLING switch is set to TV FIELD or TV LINE, the output of the Sync Separator is automatically applied to the A Sweep Trigger circuits, and only this signal may be used for triggering the A Sweep. For B Sweep, the horizontal sync signal (line-rate sync) from the Separator is fed only to the TV LINE position on the B TRIGGER SOURCE switch, which may be selected at the option of the user.

To optimize video measurements, the vertical amplifier ac input coupling capacitors are increased from 0.02 to 0.2 microfarad. The larger physical size of these capacitors increases the input shunt capacitance, which is normalized at 24 picofarads.

This following descriptive text includes the characteristics, operation, and maintenance of the added features of Option 05. For all other information concerning the 465B Oscilloscope, refer to appropriate sections of the Operators manual or this Service manual.

## SPECIFICATION

Electrical characteristics and performance requirements listed in the Specification part of this manual are applicable to the 465B Option 05 oscilloscope with the following exceptions or additions.

### Input

| | |
|---|---|
| Resistance | 1 MΩ ±2% |
| Capacitance | 24 pF ±2% |
| Time Constant | 24 μs ±2% |

### AC Input Coupling

Low Frequency −3 dB point

| | |
|---|---|
| Direct | ≤1 Hz |
| Via 10X Passive Probe | 0.1 Hz |

Tilt (10-ms pulse)

| | |
|---|---|
| Direct | ≤2.5% |
| Via 10X Passive Probe | ≤0.25% |

### Triggering

| | |
|---|---|
| Sync Separation | Stable video rejection and sync separation from sync-positive or sync-negative composite video, 405- to 819-line, 50 or 60 Hz field rate, or for closed-circuit systems using up to 1201 lines, 60 Hz field rate. |

| Amplitude (p-p) | | Min | Max |
|---|---|---|---|
| Internal | Composite video (nominal)[a] | 1.2 div | 20 div |
| | Composite sync | 0.5 div | 20 div |
| External | Composite video (nominal) | 225 mV | 4 V |
| | Composite sync | 75 mV | 4 V |
| Ext/10 | Composite video (nominal) | 2.25 V | 40 V |
| | Composite sync | 750 mV | 40 V |

[a]Peak video ≈ 7/3 sync amplitude.

## FURNISHED ACCESSORIES

1 Graticule, NTSC (CCIR System M): −40 to +100 units, with 7.5-unit setup line; horizontal divisions along line zero (see Accessories tab page for part number).

1 Graticule, CCIR (CCIR System B): zero to −100 units, 35-unit setup line; horizontal divisions along line 30 (see Accessories tab page for part number).

## OPERATING INFORMATION

The following instructions and information pertain primarily to the use of the 465B Option 05 oscilloscope in TV applications. Refer to preceding sections of this manual for use and operation of the unmodified instrument.

### Installation of Video Graticule

To install a video graticule, loosen (about six turns) the four captive screws holding the crt bezel in place and remove the bezel. Remove the light filter from the two bosses on the bezel and install the desired graticule on these bosses, with the marking on the outside.

*NOTE*

*The extended tab at the bottom of the graticule mates with the slightly wider (bottom) margin of the graticule cover.*

The graticule can be moved slightly horizontally to align the external graticule and mask with the crt graticule and viewing area. Reinstall the bezel.

When the video graticule is installed, the 10 horizontal divisions along line zero correspond to the internal graticule divisions, and the TIME/DIV calibration of the

oscilloscope is correct. However, the vertical divisions represent only proportions of the 100-unit (CCIR) or 140-unit (NTSC) video waveform, and the vertical VOLTS/DIV calibration is inapplicable.

To calibrate for a standard 1 volt (nominal) studio video signal, apply the 300 millivolt CALIBRATOR waveform to the Vertical input and adjust the VOLTS/DIV and VAR controls so that the displayed waveform occupies just 30 units (CCIR graticule) or 42 units (NTSC graticule). This adjustment may be performed with a free-running sweep.

### Operation of the Sync Separator

To trigger the 465B on a video signal, perform the following three steps:

1. Set the A TRIGGER COUPLING switch to either TV FIELD or TV LINE.

2. Apply a suitable Composite Sync or Composite Video waveform to the A External Trigger input connector.

*NOTE*

*Composite Sync is combined Vertical and Horizontal sync as a single waveform, but without video (picture) waveforms. Composite Video is the picture waveform complete with Vertical and Horizontal blanking and sync.*

For special considerations in Dual Trace modes (ALT and CHOP), refer to Vertical Operating Modes—Special Considerations in this section. For internal triggering, the sync portion of the displayed waveform should be at least 10 units, or 0.5 division on the CCIR graticule; 14 units, or about 0.75 division on the NTSC graticule. For external triggering, the sync portion of the waveform should be at least 75 millivolts in amplitude, or 0.75 volt in the EXT/10 mode. Do not exceed the indicated maximum amplitudes (20 divisions for internal triggering, 40 volts for external triggering), to avoid circuit overloads and partial or complete loss of sync.

3. Select the proper polarity for the video waveform applied. For normal video with sync at the negative peak and positive-going picture information, the A TRIGGER SLOPE switch should be set to minus (−); for inverted video having sync at the positive peaks and peak video (white) at the negative peaks, the SLOPE switch should be set to plus (+). The A TRIGGER SLOPE switch controls an inverting/non-inverting signal preamplifier ahead of the sync separator.

### Triggering the Sweep

The output of the Sync Separator is fed directly to the A Sweep Trigger circuit; all that is required for triggering is the proper setting of the A TRIGGER LEVEL control. To trigger the B Sweep from the Line-rate trigger output, perform the following steps:

1. Make sure the A Sweep is running.

*NOTE*

*The B Sweep cannot be operated independently and cannot run more than once per operation of the A Sweep. For Composite line displays, refer to Special Measurements in this section.*

2. Set the B TRIGGER SOURCE switch to TV LINE.

3. Set the B TRIGGER LEVEL control for a stable triggered sweep.

### Vertical Operating Modes—Special Considerations

**DUAL TRACE MODES.** For dual trace operation, the Sync Separator input must be taken from Channel 1, Channel 2, or an external source. (When only one trace is displayed, the NORM position of the A TRIGGER SOURCE switch may be used.) The Sync Separator is not capable of correct processing of switched (composite vertical deflection) waveforms present on the NORM bus in the ALT or CHOP modes; it is therefore not possible to obtain stable simultaneous displays of two independent video signals that are not time-related.

**SINGLE CHANNEL TRIGGERING.** When triggering from Channel 1 or Channel 2, the waveform fed to the Sync Separator is the same (except for positioning) as that displayed on-screen when the channel is turned on. If the VOLTS/DIV VAR control is used to reduce displayed amplitude, the signal to the Sync Separator is also reduced. When the CH 2 INVERT switch is pushed in, the Channel 2 signal to the A TRIGGER SOURCE switch is also inverted. Therefore, in selecting the position of the A TRIGGER SLOPE switch in internal triggering, it is only necessary to note the polarity of the displayed waveform, disregarding its actual polarity as applied to the Vertical INPUT connector. For external triggering, the actual applied polarity will determine the necessary A TRIGGER SLOPE setting.

It is not necessary to display Channel 1 or Channel 2 to obtain CH 1 or CH 2 triggering. Whenever the AC-GND-DC switch for the channel is not in GND, the input amplifier and trigger channel are active, regardless of the selection of VERT MODE push buttons.

**ADD MODE.** A single-channel trigger signal amplitude is not affected by the contribution of the other channel to an ADD mode display. When the ADD mode with Channel 2 inverted is used to compare two video waveforms by subtraction, the Channel 1 or Channel 2 signal to the Sync Separator will be adequate for stable triggering providing the individual channel signal (when displayed alone) meets the signal requirements.

When the ADD mode is used to display a signal from two sides of a balanced line, the A TRIGGER SOURCE switch NORM (composite vertical) position may be used if neither channel signal alone is of sufficient amplitude for stable sync separation and triggering.

## Typical Operation

In a typical operating mode for the Option 05 instrument, the A Sweep establishes the basic frame and field presentation, and the B Sweep allows detailed observation and measurement of various portions of the video waveform.

To obtain stable displays free of interlace jitter (for systems which have 2:1 interlace), the A TIME/DIV switch should be set to display an odd number of fields, plus a fraction of a field, in the unmagnified display. For 50 and 60 Hz field rates, the 2 millisecond/division setting is usually selected. For some PAL system observations, a setting of 5 milliseconds/division (approximately 2 1/2 field display), with the A TRIGGER HOLDOFF control set to approximately the four o'clock position (additional one-field holdoff), may be desirable to maintain a stable display relationship to the four-field PAL burst-blanking sequence. All detail measurements are then made with B Sweep, using the B DLY'D or ALT Horizontal Display, with the B TRIGGER SOURCE switch set to either STARTS AFTER DELAY (continuously variable B Sweep start point) or to TV LINE (B Sweep starts after the leading edge of the next horizontal sync pulse following the delay interval set by the DELAY TIME POSITION control and the A TIME/DIV switch setting).

Because the leading edge of the sync pulse will not be displayed, the typical B TIME/DIV setting for width measurements on front porch, back porch and horizontal blanking intervals, horizontal sync, serration, and equalizing pulses will be 10 microseconds/division to allow display of two consecutive pulses. Use the X10 Magnifier to display the second pulse at 1 microsecond/division.

For rise and fall time measurements on blanking and sync waveforms, trigger the A or B Sweep directly from the displayed waveform (avoiding the processing delay of the sync separator). This permits viewing the triggering edge at sweep rates from 0.5 to 0.02 microsecond/division.

## Selecting an Individual Line

*NOTE*

*For field and line identification systems, refer to Identifying Fields, Frames & Lines in 525/60 and 625/50 TV Systems at the end of Option 05.*

The Sync Separator circuit does not differentiate between the two fields of an interlaced frame or among the four fields of the PAL color frame sequence. However, if a 1.5- or 3.5-field basic A Sweep cycle is used, the sweep will remain stably locked to a given display until the signal is interrupted.

**ONE FRAME CYCLE.** To display an entire vertical blanking interval and locate a specific line (e.g., one of the lines containing a specific VIT waveform), set the A TIME/DIV switch to 2 milliseconds and the B TIME/DIV switch (pull to unlock from A) to 10 microseconds. Use the Horizontal POSITION control to center the second vertical blanking interval to center-screen and press the X10 MAG push button in. This will provide sufficient resolution to identify the field. Adjust the A TRIGGER HOLDOFF as necessary.

If the displayed field is not the desired one, first rotate the A TRIGGER SLOPE control momentarily to the opposite polarity then rotate back again until the start of the desired field is displayed.

Press A INTEN and use the DELAY TIME POSITION control to position the intensified zone (B Sweep) on the desired line. Pressing the B DLY'D button will then display the desired line. Select ALT Horizontal Display to view both A INTEN and B DLY'D traces together.

**TWO FRAME CYCLE.** If PAL Burst blanking is to be checked, an A Sweep 3.5-field cycle (5 milliseconds/division, with the A TRIGGER HOLDOFF at about four o'clock) is required, using B Sweep (ALT Horizontal Display recommended) to identify fields and lines. At 5 milliseconds/division, only two and a fraction fields will be displayed with a full field covered by the trigger holdoff interval. To put a specific field on-screen in a particular location will typically require several operations of the A TRIGGER SLOPE switch.

## Special Measurements

**OVERSCANNED DISPLAYS.** For various video measurements, it may be desirable to magnify the video waveform vertically beyond the limits of the screen. Under these circumstances, the trigger amplifiers or Sync Separator may be overloaded, blocking out some sync



@

pulses in the vicinity of strong video transitions, or losing sync pulses altogether. To avoid overload problems, use external sync or use the other vertical channel to supply a constant amplitude signal to the Sync Separator while the overscanned observations are being made. Note, however, that transient-response aberrations in the main vertical amplifier will be increased when the signal is driven offscreen, becoming relatively serious if the amplifier is driven to saturation and cutoff.

**HORIZONTAL SYNC PULSE MEASUREMENTS.** Rise and fall times and width of horizontal sync pulses may be measured while using the Sync Separator to determine whether part or all of the lines or groups of lines appear to be abnormal. A bright display of all horizontal sync pulses is obtained when the A TRIGGER COUPLING switch is set to TV LINE.

**RF INTERFERENCE.** Operation in the vicinity of some FM and TV transmitters may show objectionable amounts of rf signal energy in the display, even when coaxial input connections are used. The front-panel 20 MHz BW LIMIT switch will usually eliminate such interference from the display, but will not affect the signal reaching the Sync Separator. Where the rf interferes with Sync Separator operation, external filters will be required. Use of probes designed for 10 to 30 MHz oscilloscopes will provide 6 to 10 dB attenuation in the 50 to 100 MHz range and may be beneficial in reducing interference.

## IDENTIFYING FIELDS, FRAMES, AND LINES IN 525/60 AND 625/50 TV SYSTEMS

### NTSC (CCIR System M)

Field 1 is defined as the field whose first equalizing pulse is one full H interval (63.5 microseconds) from the preceding horizontal sync pulse. The Field 1 picture starts with a full line of video. Field 1 lines are numbered 1 through 263, starting with the leading edge of the first equalizing pulse. The first regular horizontal sync pulse after the second equalizing interval is the start of line 10.

Field 2 starts with an equalizing pulse a half-line interval from the preceding horizontal sync pulse. The Field 2 picture starts with a half line of video. Field 2 lines are numbered 1 through 262, starting with the leading edge of the second equalizing pulse. After the second equalizing interval, the first full line is line 9.

### CCIR System B and Similar 625/50 Systems (including PAL)

In most 625-line, 50 Hz field-rate systems, identification of parts of the picture relies primarily on continuous line numbering rather than on field-and-line identification, except for PAL systems.

The CCIR frame starts with the first (wide) vertical sync pulse following a field which ends with a half-line of video. The first line after the second equalizing interval is line 6; the first picture line is line 23 (half-line of video). The first field of the frame contains lines 1 through the first half of line 313, the picture ending with a full line of video (line 310).

The second field of the frame commences with the leading edge of the first (wide) vertical sync pulse (middle of line 313), and runs through line 625 (end of equalizing interval). The first full line after the equalizing interval is line 318; the picture starts on line 336 (full line).

The first field is referred to as "odd", the second field as "even". Note that the identification systems for System M and System B are reversed.

In the four-field PAL sequence with Bruch Sequence Color-burst blanking, the fields are identified as follows:

Field 1: Field that follows a field ending in a half-line of video, when preceding field has color burst on the last full line. Field 1 lines are 1 through 312 and half of line 313. Color burst starts on line 7 of Field 1; a half-line of video appears on line 23.

Field 2: Field that follows a field ending in a full line which does not carry color burst. Field 2 lines are the last half of line 313 through line 625. Color burst starts on line 319 (one line without burst following the last equalizing pulse); a full line of video appears at line 336.

Field 3: Field that follows a field ending in a half line when preceding field has no color burst on its last full line. Field 3 lines are 1 through the first half of line 313. Burst starts on line 6 (immediately following the last equalizing pulse); a half-line of video appears on line 23.

Field 4: Field that follows a field ending in a full line carrying color burst. Field 4 lines are the second half of line 313 through line 625. Color burst for Field 4 starts on line 320 (two full lines without burst follow the last equalizing pulse); video starts with a full line on line 336.

# THEORY OF OPERATION

## Introduction

This section describes circuitry unique to Option 05. Refer to the Theory of Operation section of this manual for information concerning those portions of the oscilloscope circuitry that are unchanged by Option 05.

Figure 6-3 shows the circuit stages for those circuits added or changed by Option 05. This discussion is limited to a general description of those stages. Refer to the schematic diagrams and component location figures at the end of this Option 05 description for a more detailed examination of individual components.

## Switching

The added TV FIELD and TV LINE positions of the A TRIGGER COUPLING switch open the conventional signal path to the A Trigger circuitry. The TV FIELD and TV LINE positions also couple the appropriate output of the Sync Separator stage to the conventional A Trigger Generator circuitry.

The Option 05 TV LINE position on the B TRIGGER SOURCE switch couples line rate trigger signals from the Sync Separator output to the conventional B Trigger Generator circuitry.

With Option 05 the A TRIGGER SLOPE switch adds connections through P2834 to provide inverting or non-inverting control of the Trigger Amplifier and Inverter stage.

## Trigger Pickoff

This stage consists of Q7512, a source follower, and Q7514, an emitter follower. The stage provides isolation, impedance match to the Trigger Amplifier and Inverter, and minimum loading to the input signal. Gain of the Trigger Pickoff stage is slightly less than unity. The video trigger signal (internal or external) from the A TRIGGER SOURCE switch is coupled to the input of Q7512, while the output of the Trigger Pickoff stage (Q7514 emitter) is fed through P7575 and P2810 to the Trigger Amplifier and Inverter stages (Q2802, Q2803, and U2810). CR7510 protects the input of Q7512 from damage when high amplitude negative signals are present.

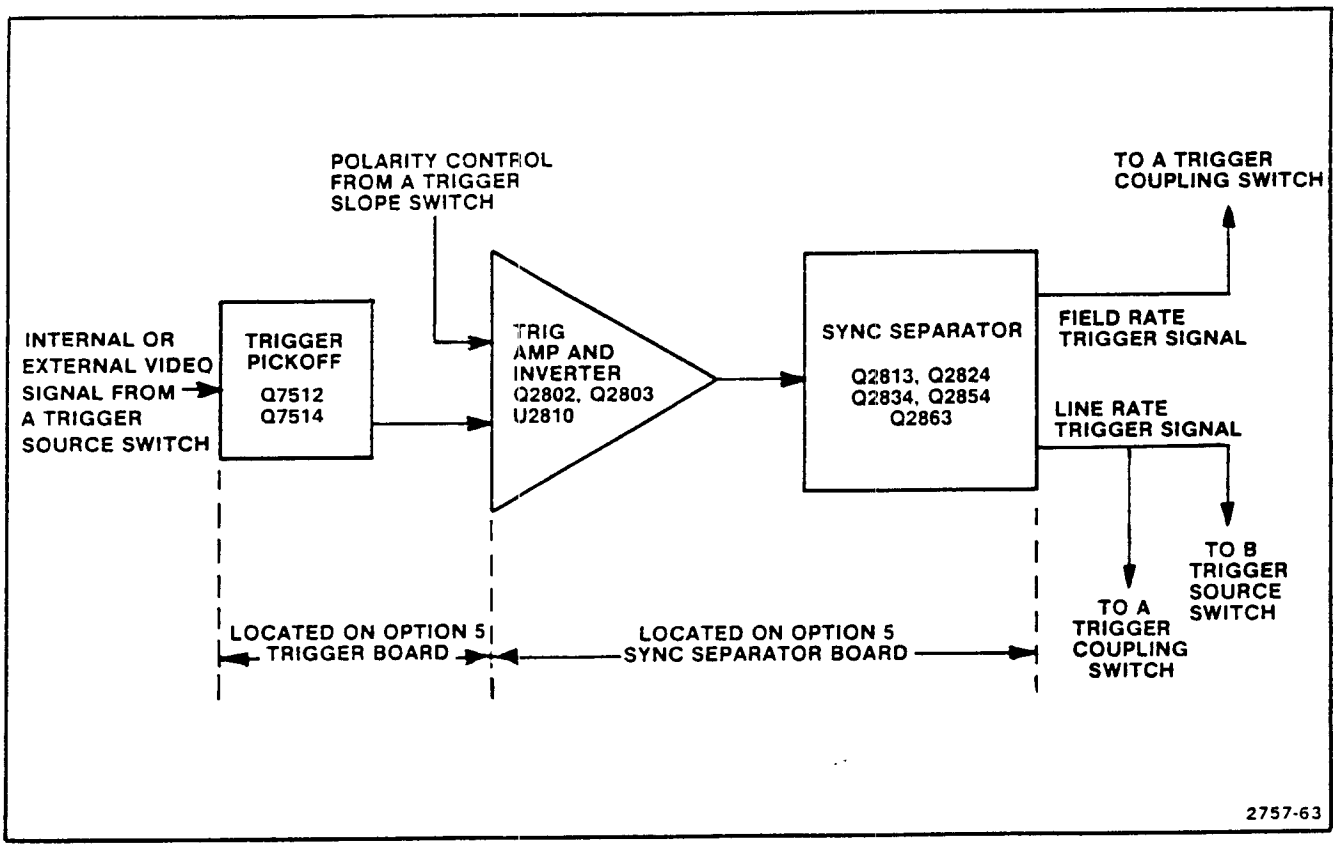


Figure 6-3. Option 05 simplified block diagram.

## Trigger Amplifier and Inverter

This stage consists of Q2802, Q2803, and U2810, and is designed to provide adequate drive and correct polarity for the following Sync Separator stage, which accepts only negative sync (positive-going video). Signal is applied to the Trigger Amplifier and Inverter from the Trigger Pickoff via P2810. Polarity control is applied from the A TRIGGER SLOPE switch through P2834. Output from the stage is fed to Q2813, the Sync Separator input.

When the A TRIGGER SLOPE switch is set to +, this stage inverts the signal it receives from the Trigger Pickoff. If the switch is set to −, the signal is not inverted. Only one transistor, Q2802 or Q2803, conducts at a time. Feedback resistor R2807 controls Operational Amplifier U2810 gain for low amplitude signals, while R2809, CR2807, and CR2809 control the gain for higher amplitude signals.

## Sync Separator

The Sync Separator strips off the video (picture) information from the incoming sync-negative video output of U2810, amplifies the resulting composite sync for use as horizontal (TV line) sync by A and B Sweep Triggers, and processes the composite sync to provide vertical (field rate) sync to the A Sweep Trigger circuits.

Video Stripper, Q2813 and Q2824, form a limited-swing feedback amplifier which amplifies only the negative peaks of the incoming waveform. The base of Q2813 rests at an equilibrium point of approximately +9.0 volts, which is affected slightly by Clipping Level adjustment R2826. The emitter of Q2824 is held at approximately +10.1 volts, and the collector rests at approximately +9 volts.

With sync-negative video applied to Q2813, the negative-going peaks (sync) are clamped at the +9 volt level. The positive-going portions of the input waveform generate increasing amounts of feedback current via R2818 until Q2824 reaches its negative-swing limit. Beyond this point, further positive input cuts off Q2813, and has negligible effect on the output. When Q2813 is driven positive, the negative excursion at the collector of Q2824 is stopped at approximately +7.6 volts. By not permitting Q2824 to be cut off when Q2813 is cut off the output to Q2834 is relatively unaffected by input video excursions. The maximum signal swing at the Q2824 collector for any magnitude of input signal above about 100 millivolts p-p is about 2 volts p-p, with active response confined to the most negative parts of the input signal. Divider R2824-R2825-R2826 sets the bias level for Q2824.

Diodes CR2824-CR2825 provide thermal compensation for Q2834, and have no other circuit function. Q2834 provides TV LINE (horizontal) composite sync output to the A and B TRIGGER SOURCE switches to serve as TV LINE sync, and drive to the Vertical Sync Recognizer Q2854-Q2863. In the quiescent state, Q2834 is cut off, its emitter held at +5.1 volts and its base below the turn-on level of +5.7 volts. The collector is at +10.1 volts, and is prevented from rising further above the +9.6 volts supply by CR2828. When negative-going sync pulses arrive at Q2813, they are inverted by Q2824 and provide sufficient base current to saturate Q2834. Q2834 is driven between saturation and cutoff, and generates approximately 4.9 volts p-p of sync signal, attenuated to approximately 0.1 volt, suitable for A and B Sweep triggering, and is ac coupled to the A and B Sweep Trigger circuitry.

The Vertical Sync Recognizer, Q2854 and Q2863, recognizes the various forms of TV Vertical (Field Rate) sync pulses by providing an output signal proportional in amplitude to the duration (width) of a preceding negative-going pulse. The output signal occurs on the trailing edge of the input pulse. In most TV systems using sync-negative video, a vertical sync pulse consists of a train of negative-going pulses about five times wider than horizontal sync pulses, and separated by narrow intervals (serrations) of about the same width as horizontal sync pulses. In these systems, the recognizer produces a train of narrow output pulses, one for each serration of the sync pulse. In some 405/50 and 819/50 broadcast systems and in many closed circuit TV systems, the vertical sync pulse is a single negative-going (sync-negative) pulse having a duration of several full horizontal lines. In these systems, the recognizer puts out a single narrow pulse at the end of the sync pulse.

Q2854 is driven by the Q2834 Sync Amplifier with a 4.9 volt signal, with the negative portion of the signal representing the sync portion of the incoming waveform. In the absence of sync pulses, the collector of Q2834 is high and CR2831 holds the base of Q2834 at about +9.6 volts. When the Q2834 collector steps negative with a sync pulse, Q2834 is cut off and its collector steps positive by about 350 millivolts. The output stage network sets the emitter of Q2863 near +10.2 volts and provides Q2854 with a collector voltage of around +12.2 volts. The 60 microamp collector current of Q2854 (set by approximately 9.0 volts drop across R2856) generates around a 0.35 volt drop in the equivalent 5.5 kilohm collector load. This sets the base voltage of Q2863 at +11.9 volts nominal, ensuring that Q2863 is cut off.

When Q2854 is cut off, C2856 discharges toward ground on a 30 microsecond time-constant, starting at a rate of about −300 millivolts per microsecond. The Q2854 emitter voltage decreases 0.5 to 2.0 volts for the duration of a 2- to 6-microsecond wide horizontal sync or vertical equalizing pulse. For the longer duration vertical sync pulses, the emitter voltage decreases 4 volts (typical for 819/50 system with serrations) to 5.5 volts (voltage decrease stops when the emitter reaches +4.2 volts since the base is held at +4.7 volts).

When the collector of the Q2834 Sync Amplifier steps positive at the end of the pulse, a negative-going output pulse is generated at the collector of Q2854 that is proportional to the amount of emitter voltage decrease. The exact magnitude of this output pulse is a complex function of the rate of rise of the positive transition from Q2834, the value of C2856, the collector-to-base capacitance of Q2854 (including C2854) and the collector-to-ground capacitance of Q2854. The output pulse at the Q2854 collector is approximately 80% of the amount of voltage decrease.

The positive-going trailing edge of the differentiated Q2854 collector output pulse, which is coupled back to the base by C2854 and the Q2854 collector capacitance, creates an overshoot at the base of Q2854. This drives the base about 1.5 volts above the quiescent level at the end of a vertical sync pulse (this overshoot does not appear on the Q2834 collector bus). The Q2854 collector waveform stays negative during the time the base is being driven positive; when the base stops at the quiescent level, the collector voltage rises rapidly, coupling an apparent overshoot into the base waveform. This condition tends to delay the start of the emitter voltage decrease for vertical serrations following the first one, but is otherwise insignificant.

The output stage bias network, keeping Q2863 cut off in the quiescent state, inhibits the output of Q2854 collector pulses of less than about 2 volts peak (negative) amplitude. The larger pulses corresponding to the trailing edge of vertical sync pulses are large enough to turn on Q2863, and provide output signals of 1 to 2.5 volts at the input end of C2865. Because of the short rise time of the generated pulses, the output stage responds a small amount, even during cutoff, due to base-emitter capacitance in Q2863; this is particularly noticeable when the load is removed.

With the load disconnected, the negative-going output pulses are 2 to 2.5 volts in amplitude (somewhat smaller in 819/50 systems with serrated sync pulses), with a rise time of about 25 nanoseconds and a width of about 150 nanoseconds. Because they are so narrow, with a low repetition rate, they are hard to locate in an oscilloscope display. They are frequently misinterpreted as to their presence or absence, their amplitude, and even polarity (a small trailing-edge overshoot is often mistaken for the pulse itself).

The output stage is diode-connected to limit positive-going peaks in the output. Output coupling capacitor C2865 attenuates the signal, providing a proper level to the A Trigger circuits, to permit correct A TRIGGER LEVEL control action.

## ADJUSTMENT PROCEDURE

### Introduction

This procedure ensures proper calibration and performance of the TV Sync Separator circuitry included in Option 05, and is based on the 525/60 line and field system. If your Option 05 instrument is calibrated with the equipment prescribed for the 525/60 system, it should perform satisfactorily with other line and field systems.

Before starting this procedure, make sure the rest of your instrument meets all the specifications covered by the Performance Check or Adjustment Procedure in the main portion of this manual. For Option 05 instruments, during the main Performance Check or Adjustment Procedure, use the 24 picofarad Normalizer for vertical attenuator input compensation. Refer to Table 6-1 for complete information on the Normalizer.

### Preliminary Procedure for Sync Separator Calibration

1. Refer to the instructions in the main portion of this manual and remove the front cover and cabinet from your Option 05 instrument.

2. Set the controls as stated under Preliminary Control Settings for Option 05 calibration.

3. Connect the Option 05 instrument to a power source within the range of its overall voltage and frequency specifications.

4. Refer to the Performance Temperature Specifications in the Performance Check or Adjustment Procedure in the Specification section of this manual.

5. Allow at least 20 minutes warm-up before proceeding.



@

Table 6-1

**OPTION 05 TEST EQUIPMENT REQUIRED**

| Description | Minimum Specifications | Examples |
|---|---|---|
| Television Test Signal Generator | Composite Video Output with 525/60 and 1201/60 line and field rate; Output 350 mV to 1 V into 75 Ω termination. | Tektronix Part Number 067-0601-00 Calibration Fixture with 067-5002-00 (525/60) and 067-5010-00 (1201/60) plug-in units. |
| Test Oscilloscope with 10X Probe | Bandwidth, dc to 20 MHz; minimum deflection factor, 5 mV/division at 20 MHz; Accuracy within 3%. | TEKTRONIX 465B Oscilloscope with included 10X probe. |
| Termination | Impedance, 75 Ω; connectors, bnc. | Tektronix Part Number 011-0055-00. |
| Cable, Coaxial (two required) | Impedance, 75 Ω (not critical, 50 Ω may be substituted); length, 42 inches; connectors, bnc. | Tektronix Part Number 012-0074-00. |
| Input Normalizer | RC Time Constant, 24 pF times 1 MΩ (used during Vertical Input Compensation in main Performance Check and Adjustment Procedure). | Tektronix Part Number 067-0539-00. |

## Preliminary Control Settings for Option 05 Calibration

(unlisted controls may be left at any position)

### Power Controls

| | |
|---|---|
| Regulating Range Selector | At center of range of available power source. |
| Line Voltage Selector | As specified for available power source. |
| POWER | ON (pull) |

### CRT Controls

| | |
|---|---|
| INTENSITY | Midrange (for viewable trace) |
| FOCUS | Midrange (for focused trace) |
| SCALE ILLUM | Midrange |

### Vertical Controls

| | |
|---|---|
| VERT MODE | CH 2 |
| CH 2 VOLTS/DIV | .1 V |
| CH 2 Input Coupling | AC |
| INVERT | Out (Normal) |
| 20 MHz BW LIMIT | Full bandwidth (button out) |

### Sweep Controls

| | |
|---|---|
| HORIZ DISPLAY | A |
| A AND B TIME/DIV | 20 μs |

### Triggering Controls

| | |
|---|---|
| TRIG MODE | AUTO |
| A LEVEL | 11 o'clock |
| B LEVEL | 0 (12 o'clock) |
| A AND B SLOPE | Minus (−) |
| A COUPLING | TV FIELD |
| B COUPLING | AC |
| A SOURCE | NORM |
| B SOURCE | TV LINE |

## Procedure

**1. Clipping Level Adjustment (R2826 on Sync Separator Board)**

a. Connect the Television Test Signal Generator (with the 525/60 plug-in installed) Composite Video Output to the CH 2 input via a 75 Ω cable and 75 Ω termination.

b. Adjust the Average Picture Level fully counterclockwise and the Composite Video Amplitude for a 3-division display.

c. Set the CH 2 VOLTS/DIV switch to 0.5 V.

d. Adjust the Average Picture Level control for a 2-division display. Set CH 2 VOLTS/DIV switch to 2 V.

e. Connect a 10X probe from the test oscilloscope (Vertical Volts/Division set for 0.2 V) to TP2865 (see Figure 6-1).

f. Connect the generator rear panel Field Rate Trigger Output through a coaxial cable to the Test Oscilloscope External Trigger input. Set Test Oscilloscope Trigger Source to External, Time/Division to 1.0 ms, and Trigger Level for a stable triggered display.

g. ADJUST—R2826. Starting at the counterclockwise stop, adjust in a clockwise direction until the test oscilloscope display consists of a sequence of 6 narrow—6 wide—6 narrow pulses (for systems other than 525/60 the number and shape of pulses will differ). Adjust until top of displayed pulses are clean and free of any distortion (disregard bottom of pulses). Set Test Oscilloscope Volts/Division to 0.5 V.

h. Set the Option 05 instrument CH 2 VOLTS/DIV switch to 0.5 V, 0.2 V, 0.1 V, and 50 mV and check at each setting for a test oscilloscope display with top and bottom of waveform clean and free of distortion. If any distortion is noted, repeat parts a through h.

i. Set the Option 05 A TRIGGER SLOPE switch to + and depress the INVERT button (in).

j. Repeat part h until no improvement is noted.

k. Replace the Test Signal Generator 525/60 plug-in with the 1201/60 plug-in; set the Option 05 instrument A TRIGGER SLOPE switch to − and release the INVERT button (out). Repeat parts h through j.

l. Disconnect the Test Oscilloscope probe and external trigger cable.

**2. A and B Sweep TV Line Trigger Check**

a. Replace the Television Test Signal Generator 1201/60 plug-in with the 525/60 plug-in.

b. Set the Option 05 instrument CH 2 VOLTS/DIV switch to 1.0 V, A TIME/DIV switch to 20 μs, and A TRIGGER COUPLING switch to TV LINE.

c. CHECK—that stable TV line triggering can be achieved by adjusting A TRIGGER LEVEL control (disregard field pulses moving through the display).

d. Set the Option 05 instrument A TRIGGER COUPLING switch to TV FIELD. Set A TIME/DIV switch to 2 ms and the B TIME/DIV switch to 0.1 ms. Adjust the A TRIGGER LEVEL control for a stable triggered display.

e. Select ALT Horizontal Display and adjust B TRIGGER LEVEL control for a stable triggered intensified zone and B DLY'D trace. Adjust B INTENSITY and TRACE SEP controls as necessary.

f. Rotate the DELAY TIME POSITION dial to position the start of the intensified portion of the trace just to the left of the second displayed field pulse.

g. Rotate the DELAY TIME POSITION dial and check that a stable display can be obtained for any sync pulse that is positioned on top of the field pulse (intensified zone should jump from one sync pulse to the next as the DELAY TIME POSITION dial is rotated).

h. Disconnect the test equipment, remove the power plug from the power source, and replace the cabinet on the Option 05 instrument.

This completes the Adjustment Procedure and check of the Option 05 portion of the instrument.



@

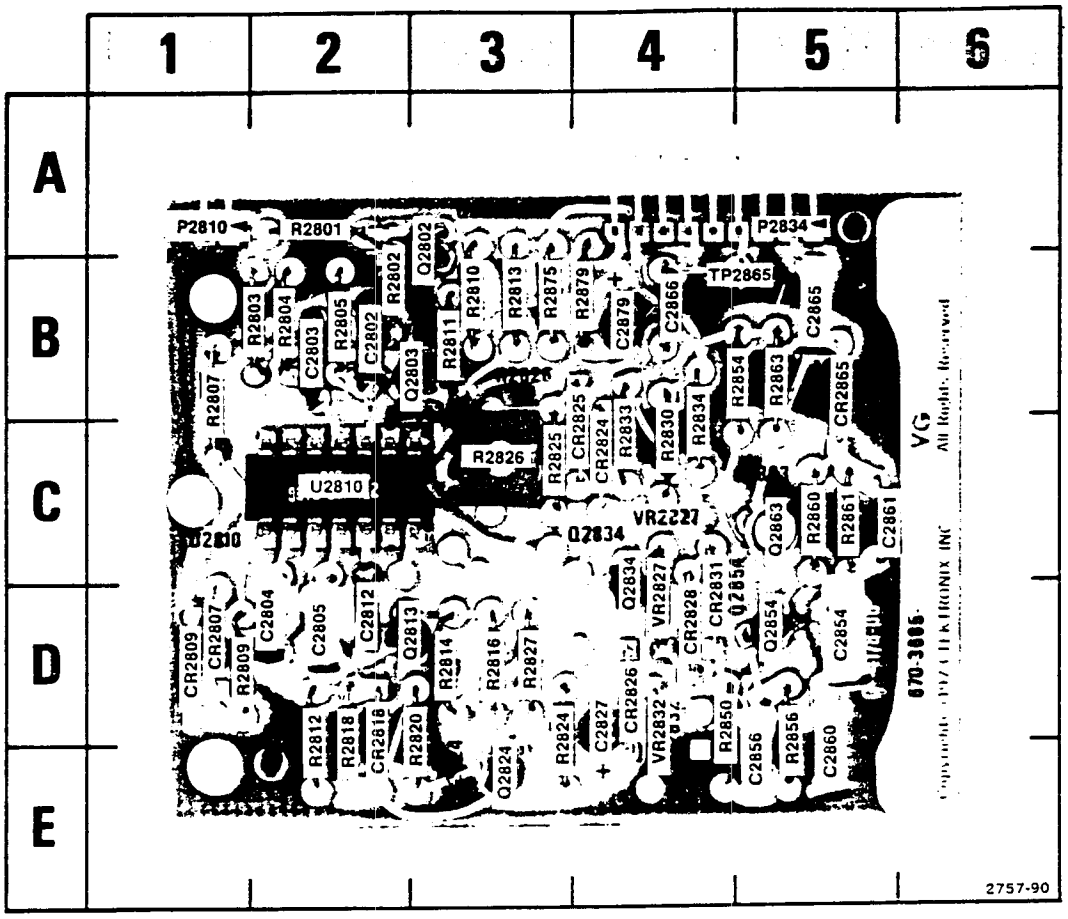


| CKT NO | GRID LOC | CKT NO | GRID LOC | CKT NO | GRID LOC | CKT NO | GRID LOC | CKT NO | GRID LOC | CKT NO | GRID LOC | CKT NO | GRID LOC | CKT NO | GRID LOC |
|---|---|---|---|---|---|---|---|---|---|---|---|---|---|---|---|
| C2802 | 2B | C2861 | 5C | CR2825 | 4C | Q2824 | 3E | R2801 | 2A | R2812 | 2E | R2827 | 3D | R2863 | 5B |
| C2803 | 2B | C2865 | 5B | CR2826 | 4D | Q2834 | 4D | R2802 | 2B | R2813 | 3B | R2830 | 4C | R2875 | 3B |
| C2804 | 2D | C2866 | 4B | CR2828 | 4D | Q2854 | 5D | R2803 | 2B | R2814 | 3D | R2833 | 4C | R2879 | 4B |
| C2805 | 2D | C2879 | 4B | CR2831 | 4D | Q2863 | 5C | R2804 | 2B | R2816 | 3D | R2834 | 4C | TP2865 | 5B |
| C2812 | 2D | | | CR2865 | 5B | | | R2805 | 2B | R2818 | 2E | R2850 | 4D | | |
| C2827 | 4D | CR2807 | 1D | | | P2810 | 1A | R2807 | 1B | R2820 | 3E | R2854 | 5B | U2810 | 2C |
| C2854 | 5D | CR2809 | 1D | Q2802 | 3A | P2834 | 4A | R2809 | 1D | R2824 | 3E | R2856 | 5E | | |
| C2856 | 5E | CR2818 | 2E | Q2803 | 3B | P2833 | 4C | R2810 | 3B | R2825 | 3C | R2860 | 5C | VR2827 | 4D |
| C2860 | 5E | CR2824 | 4C | Q2813 | 3D | P2863 | 1A | R2811 | 3B | R2826 | 3C | R2861 | 5C | VR2832 | 4D |

Figure 6-4. A12 TV Sync Separator and Inverter Amplifier board component locations.

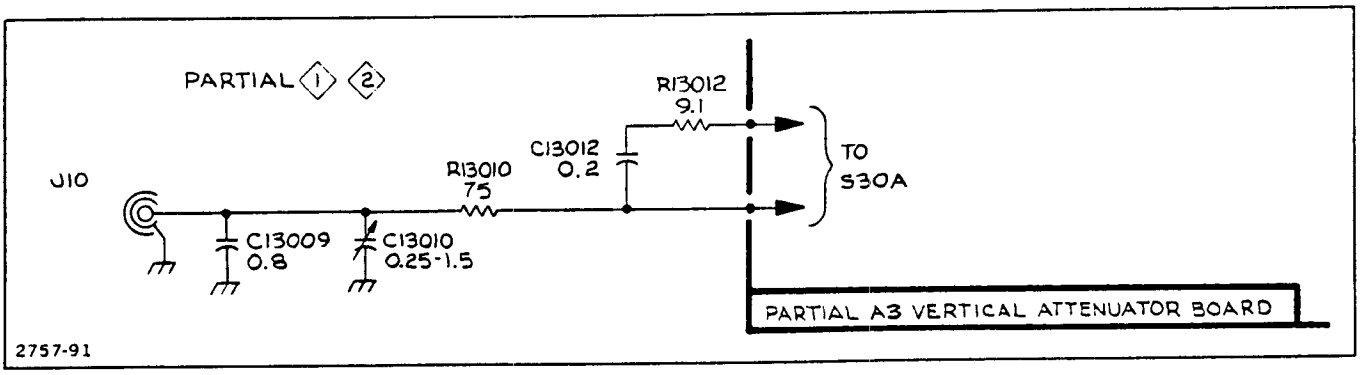


Figure 6-5. Option 05 465B Vertical Input changes.

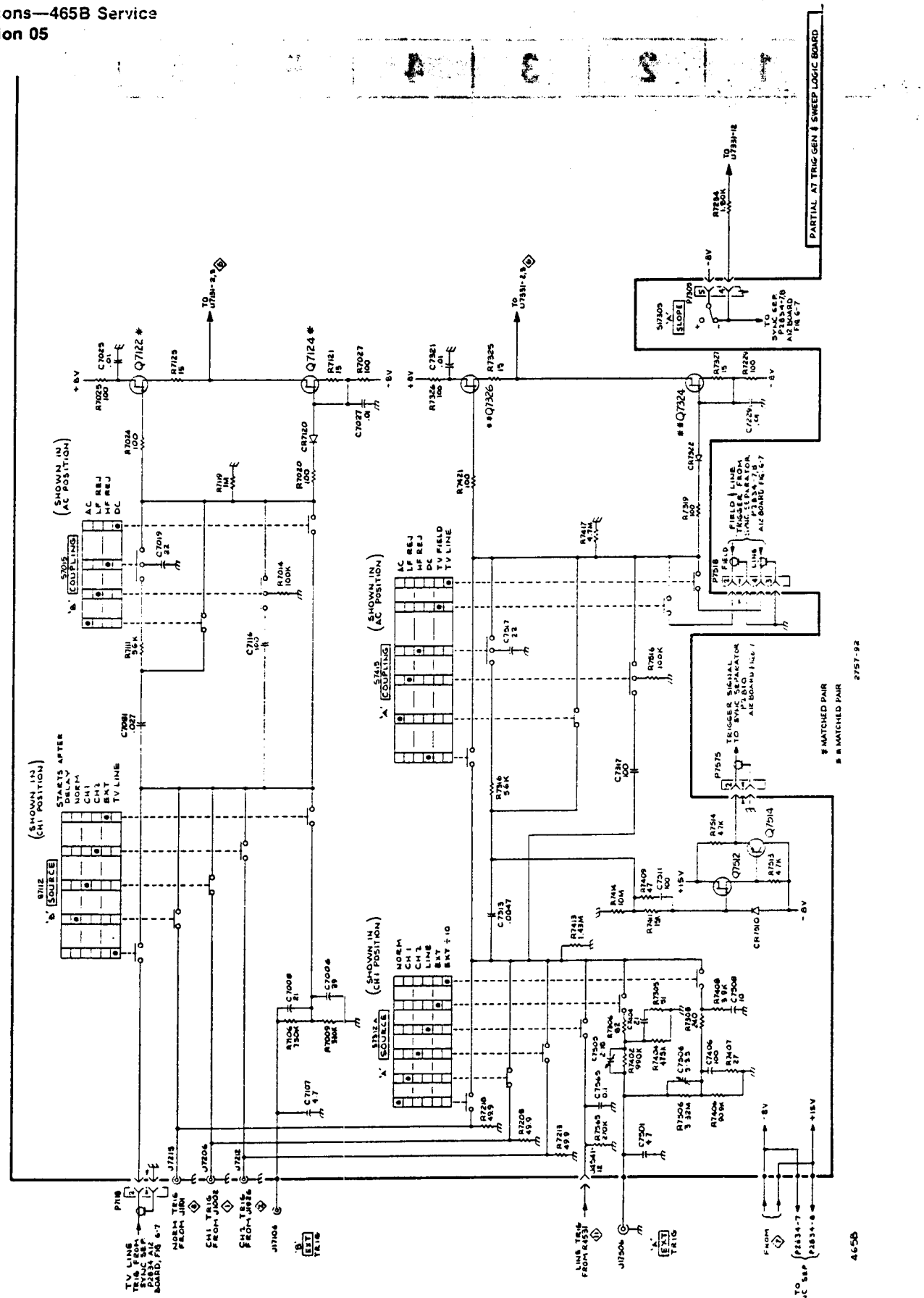


Figure 6-6. Option 05 Trigger Switches and Trigger Pickoff.

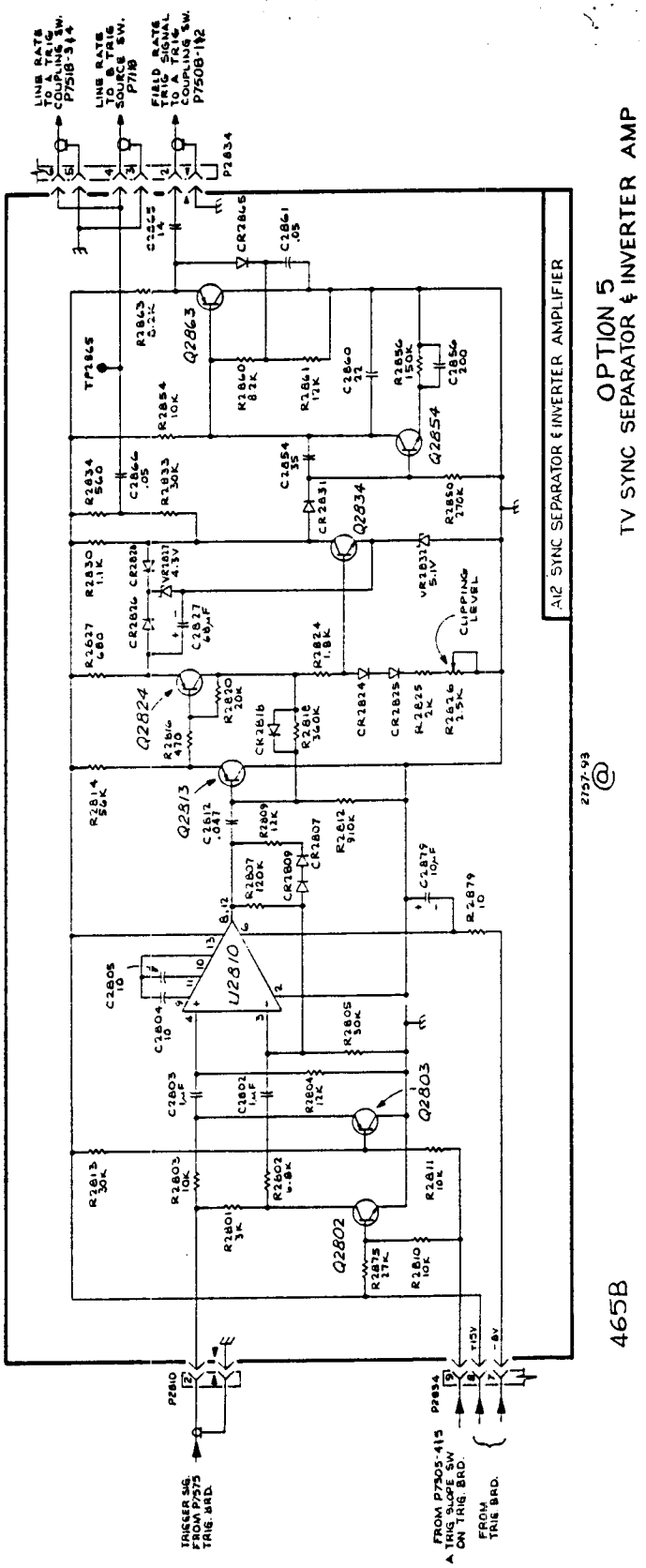


For Service Manuals Contact
MAURITRON TECHNICAL SERVICES
8 Cherry Tree Rd, Chinnor
Oxon OX9 4QY
Tel:- 01844-351694 Fax:- 01844-352554
Email:- enquiries@mauritron.co.uk

Figure 6-7. Option 05 TV Sync Separator and Inverter Amplifier.

## ELECTRICAL

| Component No. | Tektronix Part No. | Serial/Model No. Eff | Dscont | Name & Description | Mfr Code | Mfr Part Number |
|---|---|---|---|---|---|---|
| | | | | CHANGES FROM STANDARD 465B WHEN OPTION 5 IS ADDED | | |
| (CHANGE TO): | | | | | | |
| A7 | 670-6000-01 | | | CKT BOARD ASSY:TRIGGER GEN & SWEEP LOGIC | 80009 | 670-6000-01 |
| A7C7313 | 281-0722-00 | | | CAP.,FXD,CER DI:7.5PF,+/-1PF,500V | 72982 | 374005C0H0759B |
| A7R7417 | 321-0475-00 | | | RES.,FXD,FILM:866K OHM,1%,0.125W | 91637 | MFF1816G86602F |
| A7S7112 | 263-0070-00 | | | SW SL ACTR ASSY:A COUPLING 6 OF 6 POSITIONS | 80009 | 263-0070-00 |
| A7S7415 | 263-0070-00 | | | SW SL ACTR ASSY:A COUPLING 6 OF 6 POSITIONS | 80009 | 263-0070-00 |
| (ADD): | | | | | | |
| A7C7107 | 281-0592-00 | | | CAP.,FXD,CER DI:4.7PF,+/-0.5PF,500V | 72982 | 301-023C0H0479D |
| A7C7501 | 281-0592-00 | | | CAP.,FXD,CER DI:4.7PF,+/-0.5PF,500V | 72982 | 301-023C0H0479D |
| A7C7511 | 281-0814-00 | | | CAP.,FXD,CER DI:100PF,10%,100V | 72982 | 8035D2AADC0G101K |
| A7CR7510 | 152-0264-00 | | | SEMICOND DEVICE:ZENER,3W,56V,5% | 80009 | 152-0264-00 |
| A7Q7512 | 151-1005-00 | | | TRANSISTOR:SILICON,JFE,N-CHANNEL | 80009 | 151-1005-00 |
| A7Q7514 | 151-0220-03 | | | TRANSISTOR:SILICON,PNP,SEL | 80009 | 151-0220-03 |
| A7R7409 | 315-0470-00 | | | RES.,FXD,CMPSN:47 OHM,5%,0.25W | 01121 | CB4705 |
| A7R7411 | 315-0153-00 | | | RES.,FXD,CMPSN:15K OHM,5%,0.25W | 01121 | CB1535 |
| A7R7413 | 321-0496-00 | | | RES.,FXD,FILM:1.43M OHM,1%,0.125W | 91637 | HFF1813G14303F |
| A7R7414 | 315-0106-00 | | | RES.,FXD,CMPSN:10M OHM,5%,0.25W | 01121 | CB1065 |
| A7R7513 | 315-0472-00 | | | RES.,FXD,CMPSN:4.7K OHM,5%,0.25W | 01121 | CB4725 |
| A7R7514 | 315-0472-00 | | | RES.,FXD,CMPSN:4.7K OHM,5%,0.25W | 01121 | CB4725 |
| | | | | CHASSIS PARTS | | |
| (CHANGE TO:) | | | | | | |
| C13012 | 285-1055-00 | | | CAP.,FXD,PLSTC:0.2UF,10%,400V | 80009 | 285-1055-00 |
| (ADD): | | | | | | |
| C13009 | 281-0661-00 | | | CAP.,FXD,CER DI:0.8PF,+/-0.1PF,500V | 72982 | 301-000C0K0808B |
| R13012 | 307-0116-00 | | | RES.,FXD,CMPSN:9.1 OHM,5%,0.25W | 01121 | CB91G5 |
| | | | | A12 TV SYNC SEPARATOR | | |
| A12 | 670-3685-00 | | | CKT BOARD ASSY:TV SYNC SEPARATOR | 80009 | 670-3685-00 |
| A12C2802 | 283-0059-00 | | | CAP.,FXD,CER DI:1UF,+80-20%,25V | 72982 | 8131N031Z5U0105Z |
| A12C2803 | 283-0059-00 | | | CAP.,FXD,CER DI:1UF,+80-20%,25V | 72982 | 8131N031Z5U0105Z |
| A12C2804 | 281-0504-00 | | | CAP.,FXD,CER DI:10PF,+/-1PF,500V | 72982 | 301-055C0G0100F |
| A12C2805 | 281-0504-00 | | | CAP.,FXD,CER DI:10PF,+/-1PF,500V | 72982 | 301-055C0G0100F |
| A12C2812 | 283-0341-00 | | | CAP.,FXD,CER DI:0.047UF,10%,100V | 72982 | 8121N153X7R0473K |
| A12C2827 | 290-0530-00 | | | CAP.,FXD,ELCTLT:68UF,20%,6V | 90201 | TDC686M006NLF |
| A12C2854 | 281-0632-00 | | | CAP.,FXD,CER DI:35PF,1%,500V | 72982 | 308-000C0G0350F |
| A12C2856 | 281-0605-00 | | | CAP.,FXD,CER DI:200PF,10%,500V | 04222 | 7001-1375 |
| A12C2860 | 281-0511-00 | | | CAP.,FXD,CER DI:22PF,+/-2.2PF,500V | 72982 | 301-000C0G0220K |
| A12C2861 | 283-0010-00 | | | CAP.,FXD,CER DI:0.05UF,+100-20%,50V | 56289 | 273C20 |

| Component No. | Tektronix Part No. | Serial/Model No. Eff | Dscont | Name & Description | Mfr Code | Mfr Part Number |
|---|---|---|---|---|---|---|
| A12C2865 | 281-0577-00 | | | CAP.,FXD,CER DI:14PF,5%,500V | 72982 | 301-050C0G0140J |
| A12C2866 | 283-0010-00 | | | CAP.,FXD,CER DI:0.05UF,+100-20%,50V | 56289 | 273C20 |
| A12C2879 | 290-0536-00 | | | CAP.,FXD,ELCTLT:10UF,20%,25V | 90201 | TDC106M025FL |
| A12CR2807 | 152-0141-02 | | | SEMICOND DEVICE:SILICON,30V,50NA | 80009 | 152-0141-02 |
| A12CR2809 | 152-0141-02 | | | SEMICOND DEVICE:SILICON,30V,50NA | 80009 | 152-0141-02 |
| A12CR2818 | 152-0141-02 | | | SEMICOND DEVICE:SILICON,30V,50NA | 80009 | 152-0141-02 |
| A12CR2824 | 152-0141-02 | | | SEMICOND DEVICE:SILICON,30V,50NA | 80009 | 152-0141-02 |
| A12CR2825 | 152-0141-02 | | | SEMICOND DEVICE:SILICON,30V,50NA | 80009 | 152-0141-02 |
| A12CR2826 | 152-0141-02 | | | SEMICOND DEVICE:SILICON,30V,50NA | 80009 | 152-0141-02 |
| A12CR2828 | 152-0141-02 | | | SEMICOND DEVICE:SILICON,30V,50NA | 80009 | 152-0141-02 |
| A12CR2831 | 152-0141-02 | | | SEMICOND DEVICE:SILICON,30V,50NA | 80009 | 152-0141-02 |
| A12CR2865 | 152-0141-02 | | | SEMICOND DEVICE:SILICON,30V,50NA | 80009 | 152-0141-02 |
| A12Q2802 | 151-0190-00 | | | TRANSISTOR:SILICON,NPN | 80009 | 151-0190-00 |
| A12Q2803 | 151-0220-00 | | | TRANSISTOR:SILICON,PNP | 80009 | 151-0220-00 |
| A12Q2813 | 151-0188-00 | | | TRANSISTOR:SILICON,PNP | 80009 | 151-0188-00 |
| A12Q2824 | 151-0188-00 | | | TRANSISTOR:SILICON,PNP | 80009 | 151-0188-00 |
| A12Q2834 | 151-0192-00 | | | TRANSISTOR:SILICON,NPN,SEL FROM MPS6521 | 80009 | 151-0192-00 |
| A12Q2854 | 151-0192-00 | | | TRANSISTOR:SILICON,NPN,SEL FROM MPS6521 | 80009 | 151-0192-00 |
| A12Q2863 | 151-0188-00 | | | TRANSISTOR:SILICON,PNP | 80009 | 151-0188-00 |
| A12R2801 | 315-0302-00 | | | RES.,FXD,CMPSN:3K OHM,5%,0.25W | 01121 | CB3025 |
| A12R2802 | 315-0682-00 | | | RES.,FXD,CMPSN:6.8K OHM,5%,0.25W | 01121 | CB6825 |
| A12R2803 | 315-0103-00 | | | RES.,FXD,CMPSN:10K OHM,5%,0.25W | 01121 | CB1035 |
| A12R2804 | 315-0123-00 | | | RES.,FXD,CMPSN:12K OHM,5%,0.25W | 01121 | CB1235 |
| A12R2805 | 315-0303-00 | | | RES.,FXD,CMPSN:30K OHM,5%,0.25W | 01121 | CB3035 |
| A12R2807 | 315-0124-00 | | | RES.,FXD,CMPSN:120K OHM,5%,0.25W | 01121 | CB1245 |
| A12R2809 | 315-0123-00 | | | RES.,FXD,CMPSN:12K OHM,5%,0.25W | 01121 | CB1235 |
| A12R2810 | 315-0103-00 | | | RES.,FXD,CMPSN:10K OHM,5%,0.25W | 01121 | CB1035 |
| A12R2811 | 315-0103-00 | | | RES.,FXD,CMPSN:10K OHM,5%,0.25W | 01121 | CB1035 |
| A12R2812 | 315-0914-00 | | | RES.,FXD,CMPSN:910K OHM,5%,0.25W | 01121 | CB9145 |
| A12R2813 | 315-0303-00 | | | RES.,FXD,CMPSN:30K OHM,5%,0.25W | 01121 | CB3035 |
| A12R2814 | 315-0563-00 | | | RES.,FXD,CMPSN:56K OHM,5%,0.25W | 01121 | CB5635 |
| A12R2816 | 315-0471-00 | | | RES.,FXD,CMPSN:470 OHM,5%,0.25W | 01121 | CB4715 |
| A12R2818 | 315-0364-00 | | | RES.,FXD,CMPSN:360K OHM,5%,0.25W | 01121 | CB3645 |
| A12R2820 | 315-0203-00 | | | RES.,FXD,CMPSN:20K OHM,5%,0.25W | 01121 | CB2035 |
| A12R2824 | 315-0182-00 | | | RES.,FXD,CMPSN:1.8K OHM,5%,0.25W | 01121 | CB1825 |
| A12R2825 | 315-0202-00 | | | RES.,FXD,CMPSN:2K OHM,5%,0.25W | 01121 | CB2025 |
| A12R2826 | 311-1226-00 | | | RES.,VAR,NONWIR:2.5K OHM,20%,0.50W | 32997 | 3386F-T04-252 |
| A12R2827 | 315-0681-00 | | | RES.,FXD,CMPSN:680 OHM,5%,0.25W | 01121 | CB6815 |
| A12R2830 | 315-0112-00 | | | RES.,FXD,CMPSN:1.1K OHM,5%,0.25W | 01121 | CB1125 |
| A12R2833 | 315-0303-00 | | | RES.,FXD,CMPSN:30K OHM,5%,0.25W | 01121 | CB3035 |
| A12R2834 | 315-0561-00 | | | RES.,FXD,CMPSN:560 OHM,5%,0.25W | 01121 | CB5615 |
| A12R2850 | 315-0274-00 | | | RES.,FXD,CMPSN:270K OHM,5%,0.25W | 01121 | CB2745 |
| A12R2854 | 315-0103-00 | | | RES.,FXD,CMPSN:10K OHM,5%,0.25W | 01121 | CB1035 |
| A12R2856 | 315-0154-00 | | | RES.,FXD,CMPSN:150K OHM,5%,0.25W | 01121 | CB1545 |
| A12R2860 | 315-0822-00 | | | RES.,FXD,CMPSN:8.2K OHM,5%,0.25W | 01121 | CB8225 |
| A12R2861 | 315-0123-00 | | | RES.,FXD,CMPSN:12K OHM,5%,0.25W | 01121 | CB1235 |
| A12R2863 | 315-0822-00 | | | RES.,FXD,CMPSN:8.2K OHM,5%,0.25W | 01121 | CB8225 |
| A12R2875 | 315-0273-00 | | | RES.,FXD,CMPSN:27K OHM,5%,0.25W | 01121 | CB2735 |
| A12R2879 | 315-0100-00 | | | RES.,FXD,CMPSN:10 OHM,5%,0.25W | 01121 | CB1005 |
| A12U2810 | 156-0136-00 | | | MROCIRCUIT,LI:OPERATIONAL AMPLIFIER | 80009 | 156-0136-00 |
| A12VR2827 | 152-0395-00 | | | SEMICOND DEVICE:ZENER,0.4W,4.3V,5% | 04713 | 1N749A |
| A12VR2832 | 152-0195-00 | | | SEMICOND DEVICE:ZENER,0.4W,5.1V,5% | 80009 | 152-0195-00 |

## MECHANICAL

| Component No. | Tektronix Part No. | Serial/Model No. Eff | Dscont | Name & Description | Mfr Code | Mfr Part Number |
|---|---|---|---|---|---|---|
| CHANGE TO: | | | | | | |
| | 672-0796-00 | | 1 | CKT BOARD ASSY:ATTENUATOR | 80009 | 672-0796-00 |
| | 333-2524-01 | | 1 | PANEL,FRONT: | 80009 | 333-2524-01 |
| A7 | 670-6000-01 | | 1 | CKT BOARD ASSY:TRIGGER GEN & SWEEP LOGIC | 80009 | 670-6000-01 |
| | 131-0608-00 | | 8 | . TERMINAL,PIN:0.365 L X 0.25 PH,BRZ,GOLD PL | 22526 | 47357 |
| | 136-0252-04 | | 6 | . SOCKET,PIN TERM:0.188 INCH LONG | 22526 | 75060-007 |
| | | | | CHASSIS PARTS | | |
| | 337-1762-00 | | 1 | SHLD,ELECTRICAL:FAN MOTOR | 80009 | 337-1762-00 |
| | 105-0243-00 | | 1 | ACTUATOR,SWITCH: | 80009 | 105-0243-00 |
| | 441-1150-00 | | 1 | CHASSIS,SCOPE:SYNC SEPARATOR | 80009 | 441-1150-00 |
| | 211-0101-00 | | 4 | SCREW,MACHINE:4-40 X 0.25" 100 DEG,FLH STL | 83385 | OBD |
| | 211-0244-00 | | 4 | SCR,ASSEM WSHR:4-40 X 0.312 INCH,PNH STL | 78189 | OBD |
| | 179-2194-00 | | 1 | WIRING HARNESS: | 80009 | 179-2194-00 |
| | 198-2318-00 | | 1 | WIRE SET,ELEC: | 80009 | 198-2318-00 |
| | 131-0707-00 | | 5 | . CONNECTOR,TERM.:22-26 AWG,BRS& CU BE GOLD | 22526 | 47439 |
| | 175-0828-00 | | FT | . WIRE,ELECTRICAL:5 WIRE RIBBON | 08261 | OBD |
| | 352-0163-00 | | 1 | . CONN BODY,PL,EL:5 WIRE BLACK | 80009 | 352-0163-00 |

# OPTION 07
# EXTERNAL DC OPERATION

## INTRODUCTION

Option 07 is a dc-to-ac inverter that permits Tektronix oscilloscopes to operate on either 12 or 24 volts dc with no performance deterioration. Circuitry is provided to protect against damage due to connection of 24 volts when in the 12-volt mode of operation. The 24-volt external input permits use with marine and aircraft conventional dc power.

Option 07 is an integral part of the oscilloscope. The modified oscilloscope has a three-position voltage input selection slide switch (visible through the right side panel) at the rear of the line voltage selector switch. A dc-input connector is located below the fan cover on the rear panel.

Option 07 is not provided with 465B oscilloscopes equipped with the DM44 Digital Multimeter.

## SPECIFICATION

Electrical characteristics and performance requirements listed in the Specification part of this manual are applicable to the 465B Option 07 oscilloscope with the following exceptions or additions:

**DC REQUIREMENTS.** Either 11.5 to 14 volts or 22 to 28 volts. Operation with 11.5 to 14 volts will not allow use of the graticule lights or Option 05. Operating range may be extended to 15 volts or 30 volts with a series dropping resistor. Maximum elevation for + or − power lead is 50 volts with respect to oscilloscope chassis or ground.

## CONTROLS AND CONNECTORS

**Mode Switch** — Three-position switch located adjacent to the Line Voltage Selector switch on the right side panel and used to select the proper input power to the 465B.

**AC** — Permits application of ac power to the oscilloscope power switch.

**DC 12** — Permits 12-volt operation of the instrument from an external 12-volt source.

**DC 24** — Permits 24-volt operation of the instrument from either an external 24-volt power source or from the 1106 Battery Pack, which may be mechanically attached to the oscilloscope.

**DC Input Connector** — Used for connecting external dc power source to the 465B Option 07; located on rear panel.

## OPERATION AND INSPECTION

To operate the 465B Option 07 oscilloscope:

**CAUTION**

*Connect the oscilloscope frame to a ground (earth) reference before using.*

1. Set the 465B Line Selector switch and the Option 07 Mode switch to the appropriate positions for the power source to be used. Refer to the following table for proper switch positions.

| Power Source | 465B Line Selector Switch | Option 07 Mode Switch |
|---|---|---|
| 115 V ac | 115 | AC |
| 230 V ac | 230 | AC |
| 12 V dc | — | DC 12 |
| 24 V dc | — | DC 24 |
| Tektronix 1106 | — | DC 24 |

2. The 465B Option 07 oscilloscope may now be operated using the information, instructions, and procedures contained in preceding sections of this manual with the exception of DM44 digital multimeter operation.

## THEORY OF OPERATION

Option 07 is a dc-to-ac inverter operating on 12 or 24 volts dc. The operating frequency of the inverter is approximately 400 Hz. The following circuit description is for 24-volt operation unless noted otherwise. Refer to the schematic diagrams (Figures 6-9 and 6-10) throughout the detailed circuit description.

## General Description

The dc source is applied to the Turn-off Level circuit, the Start circuit, and the primary of T14500 (see Figure 6-8). If the dc source is above the level set by Turn-off Level Adjustment R1613, the Turn-off circuit does not operate.

The Start circuit provides a large current surge through T1631 secondary to the bases of Q1652, Q1662, Q1654 and Q1664. This starts the inverter.

The Turn-off circuit is activated in two ways. In 24 V operation, Q1622 is turned on by the source voltage dropping below 22 volts. In 12 V mode of operation, Q1626 is turned on by the accidental application of 24 volts dc.

## Turn-Off Level Circuit

For the following description, refer to Figure 6-9.

The voltage reference for the base of Q1606 is set by R1604, VR1604, and VR1605 to approximately 9.1 volts. This establishes the junction of R1607 and the emitters of Q1606 and Q1608 at about 9.7 volts. Power transients that occur whenever the inverter is turned on are prevented from activating the Turn-off circuit by the filtering action of C1605. This filtering action helps hold the 9.1 volt supply base of Q1606 constant and prevents Q1608 from turning on, thereby allowing sufficient time for the power source to recover after providing the initial-start surge.

Source voltages higher than 22 volts dc cause increased current through R1607, Q1606, and R1609. Q1608 is kept cut off by the increased voltage across R1609 and the resulting change across the divider comprised of R1611, R1613, and R1614. This permits no current through R1617. Since R1617 furnishes bias to Q1622, the transistor is cut off. This permits the collector of Q1622 and the rest of the turn-off circuit to rise to a voltage determined by the inverter circuit and the dc source voltage. The collector of Q1622 may be about 24 volts (with respect to −dc) with a 12-volt dc source and about 36 volts with a 24-volt dc source.

If the dc source voltage drops to less than 22 volts, the current through divider R1609, R1611, R1613 and R1614 is decreased. Q1608 conducts, taking current from Q1606, and causing less drop across R1609. This makes Q1608 conduct more, and Q1606 is cut off. Current flow through R1617 turns Q1622 on. Q1622 saturates, dropping its collector voltage to about 0.2 volt. The maximum base current of Q1622 is limited by R1618.

During 12-volt dc operation, there is no current flow through VR1604 and VR1605, since their series rating (about 18 volts) exceeds the applied voltage. The base current of Q1606, through R1605, turns Q1606 on enough to take all the current through R1607, which causes Q1608 to be cut off.

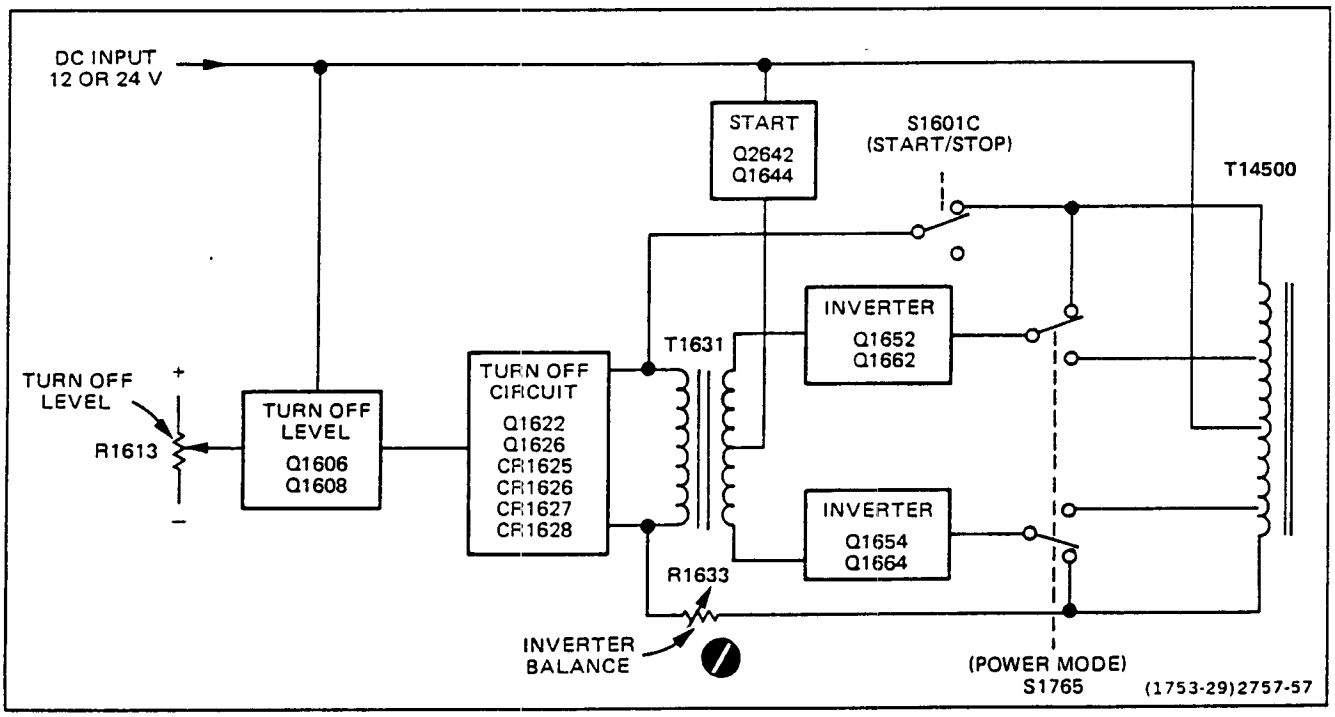


Figure 6-8. Option 07 simplified block diagram.

## Turn-Off Circuit

Q1622 is off under normal operating conditions until the dc source drops below 22 volts and causes Q1622 to conduct. Q1622 does not conduct during 12-volt dc operation, since the Turn-off Level circuit is disabled. CR1625, CR1626, CR1627, and CR1628 form a bridge rectifier. The inverter waveform is rectified to provide operating power for the Turn-off circuit. The inverter spikes are filtered by C1626 to keep them from firing Q1626 (silicon-controlled rectifier). Resistor R1623 prevents C1626 from charging to the peak-to-peak level of the inverter spikes.

When Q1622 is turned on, it saturates. The high current path required for feedback current via CR1625 or CR1626 is provided by C1622. Whenever the inverter is shut down, C1622 discharges through R1622.

If 24 volts dc is accidentally applied when the mode switch is in the 12-volt position, transformer T14500 attempts to produce two times the correct feedback. This is sufficient to cause VR1622 to conduct. VR1622 provides the firing current for silicon-controlled rectifier Q1626. Scr Q1626 fires and shorts out the bridge rectifier and the primary of T1631, stopping the inverter. R1625 prevents Q1626 from being fired by inverter noise. R1624 and C1626 provide holding current for Q1626, keeping it conducting until the surge created by the over-voltage conditions have terminated. Diode CR1624 permits rapid charging of C1626.

## Start Circuit

When S1601 is closed, the external dc source is applied to C1614, VR1641, and R1645. The initial surge is coupled to Q1642 through C1614, VR1639, and R1641. Transistor Q1642 saturates until C1614 charges through R1639 to the value determined by VR1639 and the base-emitter junction of Q1642 (about 5.7 volts), then Q1642 is cut off. R1641 limits the base current in Q1642. Zener diode VR1639, once C1614 is charged, makes Q1642 insensitive to input variations. R1642 limits Q1642 collector current. Q1644, R1645, and VR1641 provide a constant current during the time Q1642 is saturated, regardless of the dc source voltage. CR1643 is reverse biased by this starting current. The starting current is applied to the inverter transistors through T1631.

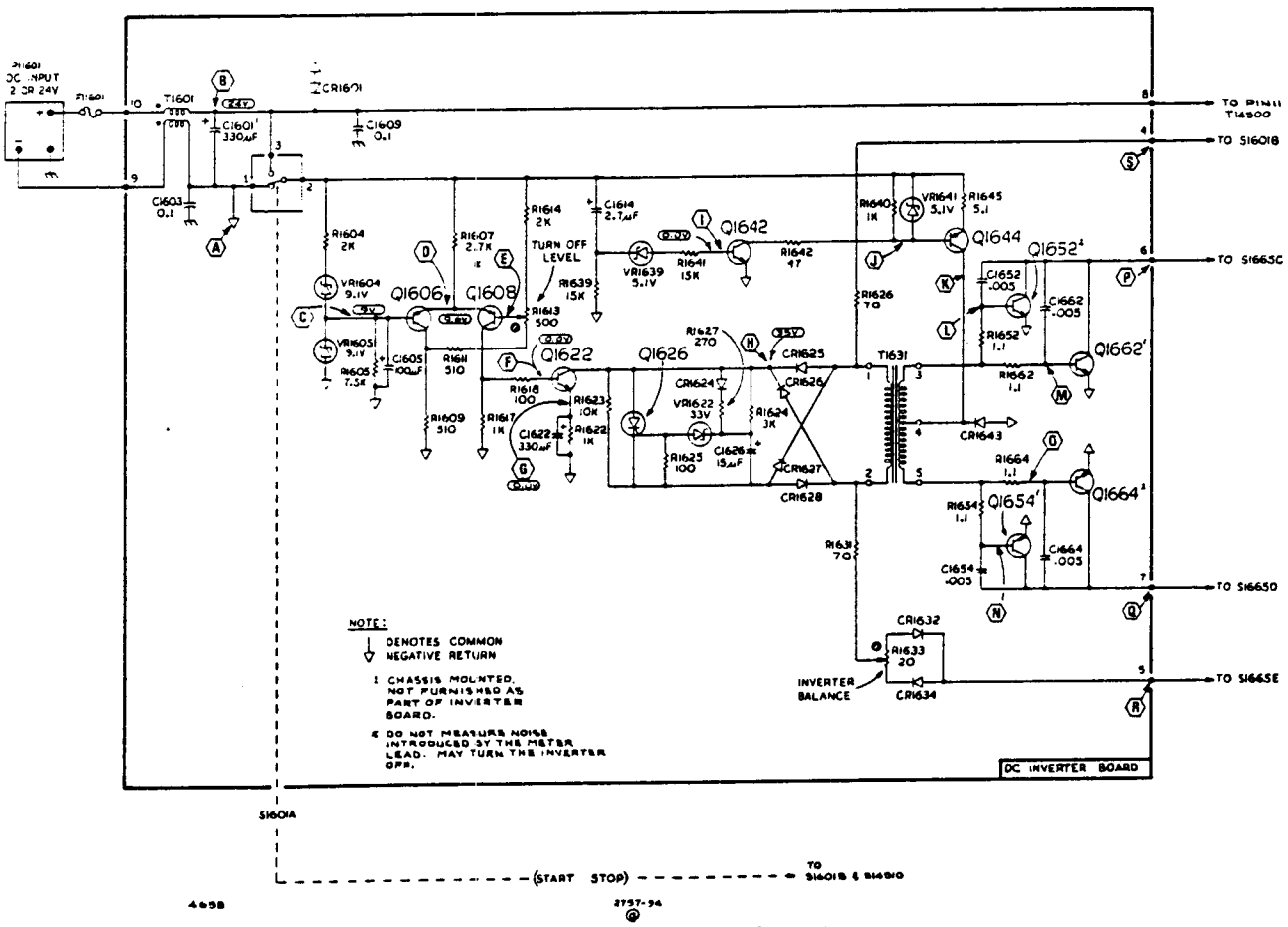


Figure 6-9. 465B Option 07 DC Inverter.

## Inverter Circuit

The starting surge is applied to the bases of Q1652, Q1662, Q1654, and Q1664 through T1631, R1652, R1662, R1654, and R1664. Since the transistors do not have identical parameters, one pair will conduct before the other and will start the inverter. Operating base current is provided through CR1643.

The main frequency-determining components for the inverter are R1626, R1631, and T1631 primary and secondary windings. Four base resistors (R1652, R1662, R1654, and R1664) distribute the drive evenly between the four transistors. C1652, C1662, C1654 and C1664 degenerate the high frequency response and reduce transients.

Feedback to maintain inverter operation is provided from T14500 primary to T1631 primary through R1626, R1631, R1633, CR1632 and CR1634. R1626 and R1631 provide frequency stability and current limiting. R1633, CR1632, and CR1634 compensate for differences in transistors and components. CR1632 and CR1634 conduct during different inverter half-cycles and permit R1633 to balance the drive to T14500.

Capacitors C4503, C4502, C4513, C4517, and C4501 are added to the secondary of T14500 with Option 07 to provide optimum reduction of transients during inverter operation.

## DC Input

External power is applied through P11601. Diode CR1601 is normally reverse biased. If the wrong polarity external power is applied, CR1601 becomes forward biased and blows fuse F11601. A low-pass network comprised of T1601, C1601, C1603, and C1609 acts as a filter to reduce transients to the dc source.

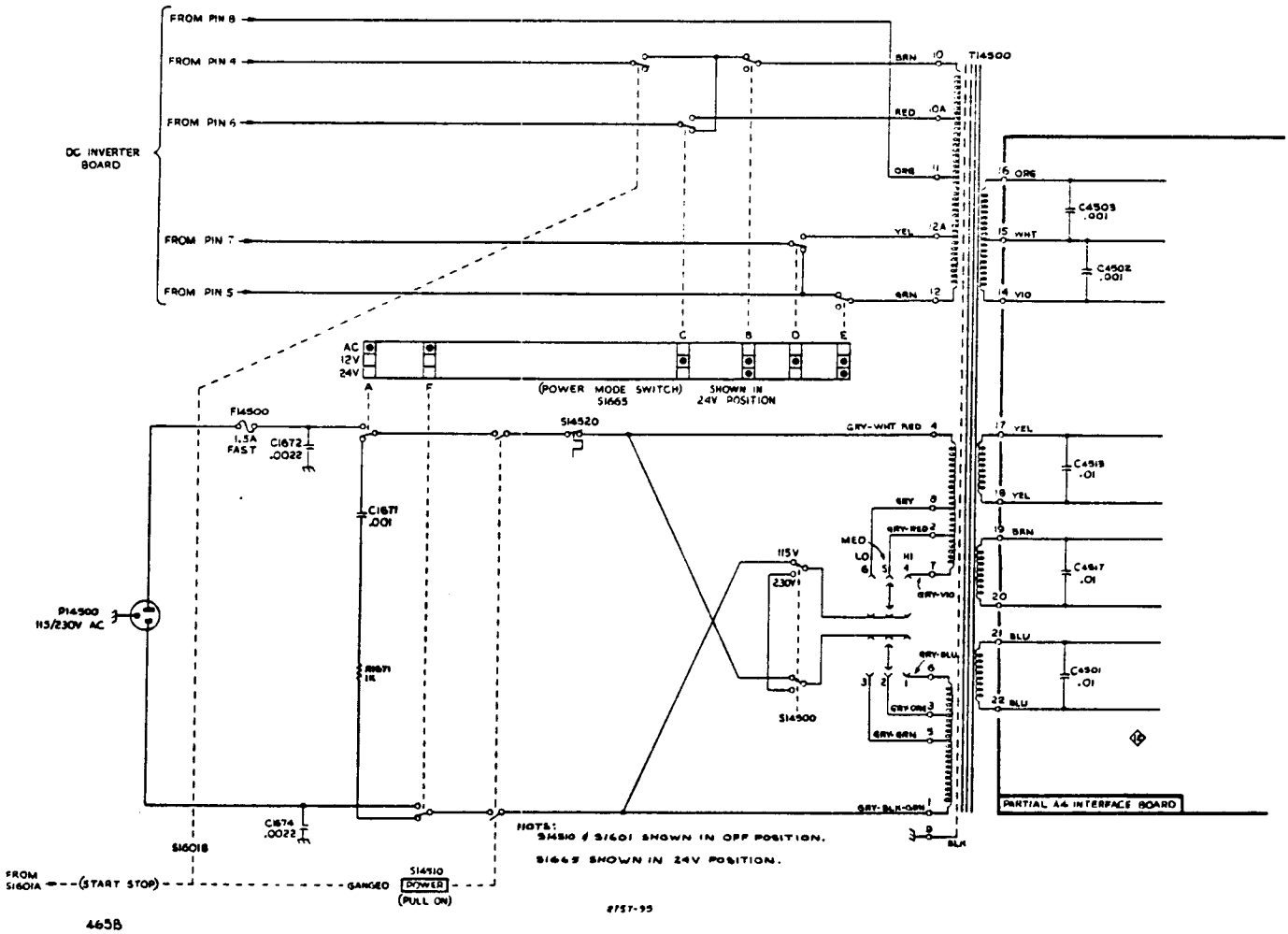


Figure 6-10. 465B Option 07 primary winding.

### Start-Stop Switch

The capacitors in the Turn-Off and Start circuits are discharged by section A of S1601 when the switch is set to the off (stop) position. This ensures the correct time constants when S1601 is changed to the on (start) position. In the start position, the dc input is applied to the inverter circuitry by S1601, section A. At the same time S1601 section B is closed, completing the feedback loop for the inverter transistors. S1601 section B stops the inverter in the off position by opening the feedback loop between T14500 and T1631.

### Power-Mode Switch (S1665)

Sections A and F of S1665 connect filter C1671 and R1671 to T14500 during 12-volt or 24-volt operation to reduce converter transients (see Figure 6-10). Sections C and D of S1665 select either transformer terminals 10A and 12A or 10 and 12, to provide the same secondary output when operating on 12 or 24 volts. Sections B and E connect transformer terminals 10 and 12 to S1665 sections C and D and to the inverter feedback circuit during both 12-volt and 24-volt operation.

## MAINTENANCE

### Obtaining Replacement Parts

**STANDARD PARTS.** Most electrical and mechanical parts can be obtained through your local Tektronix field office or representative. However, you should be able to obtain many of the standard electronic components from a local commercial source in your area. Before you purchase or order a part from a source other than Tektronix Inc., please check the Electrical Parts list for the proper value, rating, tolerance and description.

**SPECIAL PARTS.** In addition to the standard electronic components, some special components are used in Option 07. These components are manufactured or selected by Tektronix, Inc. to meet specific performance requirements, or are manufactured for Tektronix in accordance with our specifications. Most of the mechanical parts used in this instrument have been manufactured by Tektronix, Inc. Order all special parts directly from your local Tektronix Field Office or representative.

**ORDERING PARTS.** When ordering replacement parts from Tektronix, Inc., include the following information:

1. Instrument type.
2. Instrument serial number.
3. A description of the part (if electrical, include the circuit number).
4. Tektronix part number.

Table 6-2

OPTION 07 TEST EQUIPMENT REQUIRED

| Description | Minimum Specification | Usage | Examples |
|---|---|---|---|
| DC Voltmeter | 22 V to 28 V, 1% accuracy. | Set input voltage. | a. Triplett Model 630-NA<br>b. Simpson Model 262 |
| Test Oscilloscope[a] | Bandwidth, dc to 500 kHz; minimum deflection, 10 mV/division. | Verify inverter balance. | a. TEKTRONIX 212 oscilloscope.<br>b. TEKTRONIX 465B oscilloscope[a]. |
| DC Power Source | 22 V to 28 V and 11.5 V to 14 V. Handle starting surge of 4 to 10 A without dropping below 22 V. 12-volt starting surge is approximately 15 A. | Supply operating power for Option 07. | Any variable DC power supply that meets minimum specification. |

[a]If the instrument under test and Option 07 are operational and the power source used has a negative ground, the instrument under test may be used as the test oscilloscope.

### Circuit Board Chassis Removal

The Option 07 circuit board is mounted on a small chassis located between the power transformer and the crt shield. To remove the chassis, first remove the two thread-forming screws located at the top of the chassis. Then remove one screw at the bottom right side of the chassis, just below the power transformer.

## ADJUSTMENT

Option 07 may be calibrated without removing it from the oscilloscope.

In the following procedures the reference letters (A), (B), etc., refer to points indicated on the schematic diagram (Figure 6-9) and circuit board illustrations.

*NOTE*

*Option 07 is calibrated at the factory using a power supply having the specifications given in Table 6-2, Equipment Required. This permits the most accurate setting of the turn-off volts and inverter balance adjustments. Because this type of power supply may not be available, several alternative possibilities are given. The alternate power supplies have drawbacks, including voltage stability vs. time with high discharge rates. See Figure 6-11.*

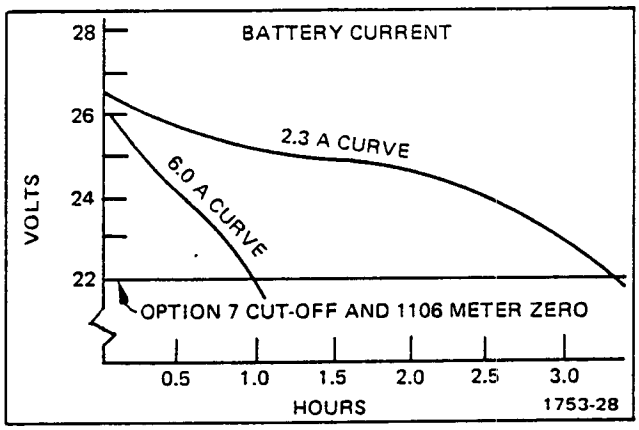


**Figure 6-11. Typical battery pack discharge curves.**

### Power Supply Alternatives

1. Variable power supply with the capabilities given in Table 6-2.

2. Variable power supply with an adequate current rating, in series with the supply alternative in item 4 or item 5.

3. TEKTRONIX 1106 Battery Pack.[1]

4. Two 12-volt wet-cell storage batteries, in series, tapped at 20, 22, or 24 volts.[2]

5. 18 to 23 NiCd cells, 4.0 ampere-hour (D cells) or greater, furnishing 20 to 28 volts.[2]

**CAUTION**

*This procedure is for an external dc source with the negative lead at ground potential (negative ground system).*

### Operating Range

a. Connect the dc source to the oscilloscope equipped with Option 07. Operate the oscilloscope in the 24 V mode. Connect the voltmeter between fuse F1601 (B) and the common negative return (A). Vary the dc source from 28 volts to 22 volts.

CHECK—that the oscilloscope operates over the voltage range.

b. Change the dc source to 12 volts. Operate the oscilloscope in the 12 V mode. Vary the dc source from 14 volts to 11.5 volts.

CHECK—that the oscilloscope operates over the voltage range.

[1]To set the turn-off level, the battery is charged above the cut-off point (22 V). An oscilloscope is connected and the battery allowed to discharge while its voltage is being monitored. As it reaches 22 V the turn-off point is set to cut off Option 07. The turn-off point on Option 07 approximately coincides with the meter zero on the 1106.

[2]This does not permit accurate adjustment of the turn-off level. NiCd batteries can be used, following the technique used for item 3.



@

## Inverter Balance

*NOTE*

*If the major oscilloscope use is with a 12-volt source, perform this step while operating the oscilloscope with dc source on 12 volts.*

Operate the oscilloscope in the 24 V mode. Set the dc source to 24 volts. Attach the probe ground to the common negative terminal (A) and connect the test oscilloscope probe tip to C1601 (C).

CHECK—that the signal is flat. See Figure 6-12.

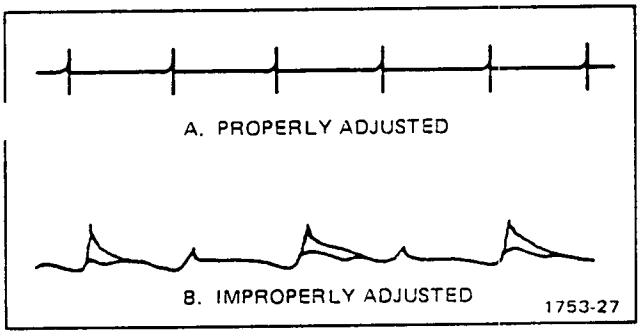


**Figure 6-12. Option 07 Inverter balance.**

ADJUST—Inverter Balance (R1633) for the flattest signal.

*NOTE*

*There is a slow drift (about a second) after the Inverter Balance adjustment has been moved. This is due to transistor characteristics and will require a slight Inverter Balance readjustment.*

*A very close approximation of the preceding method can be obtained by setting the Inverter Balance control for the minimum sound coming from the Inverter.*

## Turn-Off Level

Set the dc source for 21.8 volts.

ADJUST—Turn-off Level (R1613) slowly until Option 07 turns off.

For Service Manuals Contact
MAURITRON TECHNICAL SERVICES
8 Cherry Tree Rd, Chinnor
Oxon OX9 4QY
Tel:- 01844-351694 Fax:- 01844-352554
Email:- enquiries@mauritron.co.uk

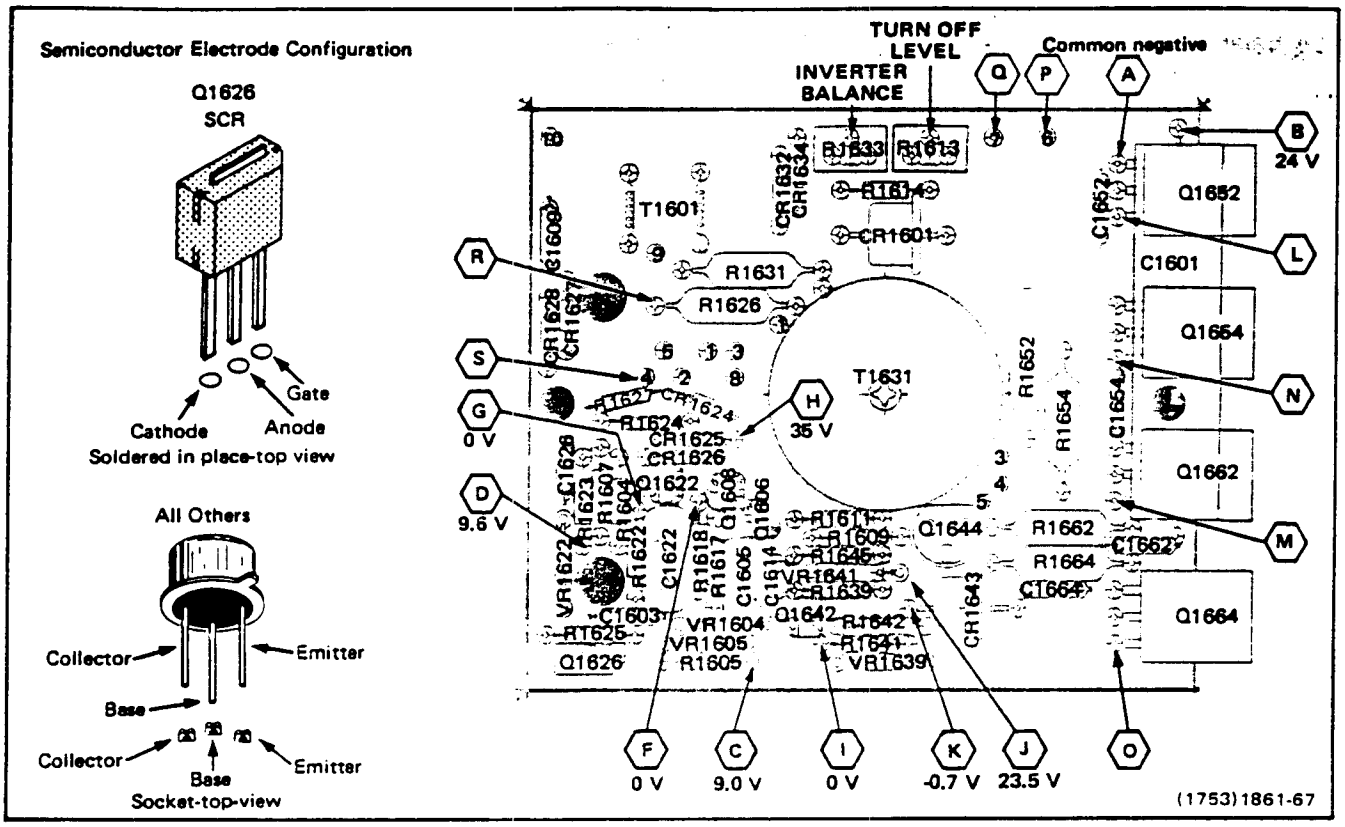


Figure 6-13. Option 07 DC Inverter circuit board adjustment and test point locations.

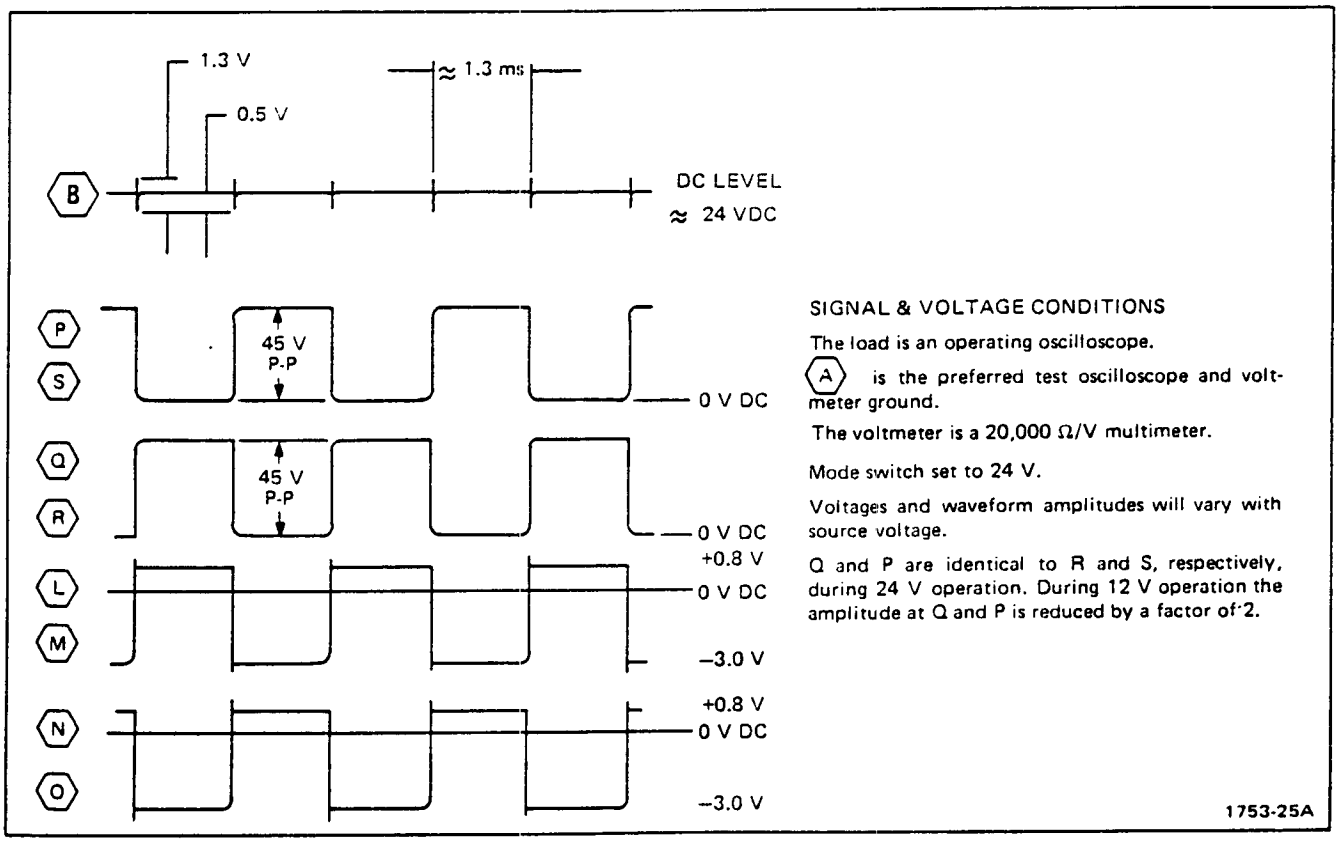


Figure 6-14. Option 07 DC Inverter idealized waveforms.

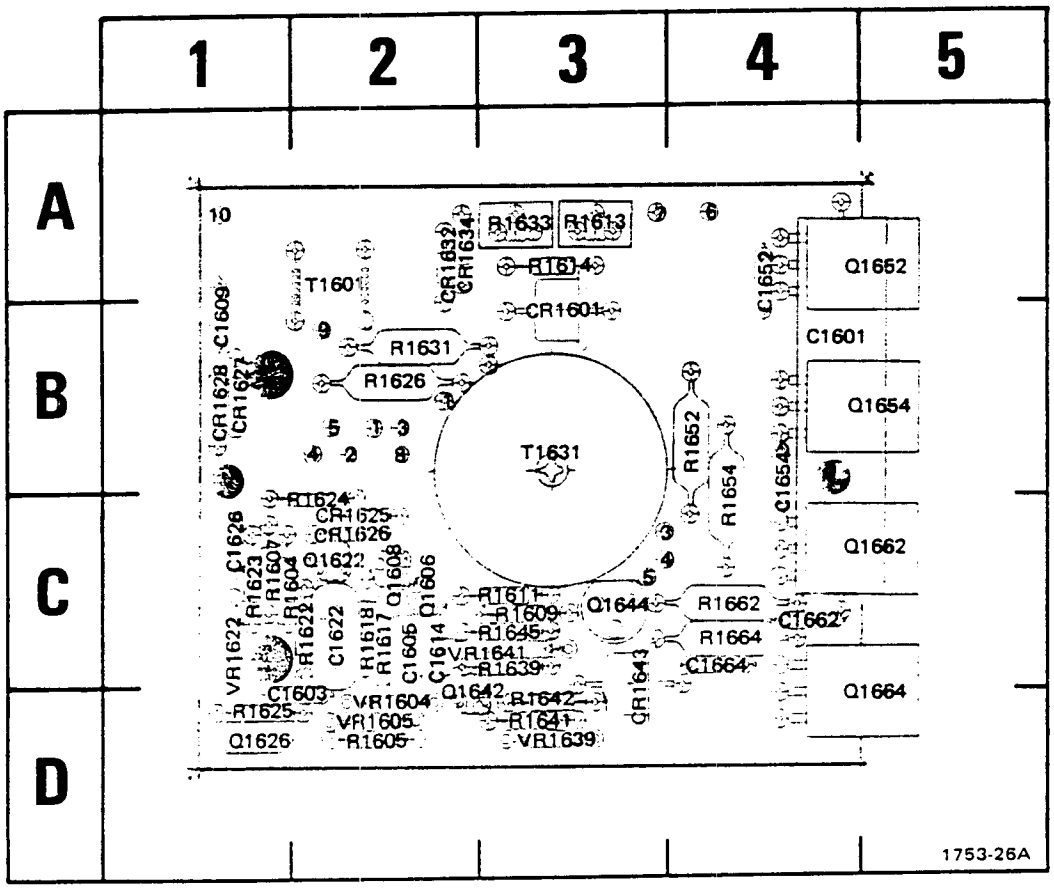


| CKT NO | GRID LOC | CKT NO | GRID LOC | CKT NO | GRID LOC | CKT NO | GRID LOC |
|---|---|---|---|---|---|---|---|
| C1601 | 4B | CR1628 | 1B | R1605 | 2D | R1641 | 3D |
| C1603 | 2D | CR1632 | 2A | R1607 | 1C | R1642 | 3D |
| C1605 | 2C | CR1634 | 2A | R1609 | 3C | R1645 | 3C |
| C1609 | 1B | CR1643 | 3D | R1611 | 3C | R1652 | 4B |
| C1614 | 2C | | | R1613 | 3A | R1654 | 4B |
| C1622 | 2C | Q1606 | 2C | R1614 | 3A | R1662 | 4C |
| C1626 | 1C | Q1608 | 2C | R1617 | 2C | R1664 | 4C |
| C1652 | 4A | Q1622 | 2C | R1618 | 2C | | |
| C1654 | 4B | Q1626 | 1D | R1622 | 2C | T1601 | 2A |
| C1662 | 4C | Q1642 | 2D | R1623 | 1C | T1631 | 3B |
| C1664 | 4C | Q1644 | 3C | R1624 | 2C | | |
| | | Q1652 | 5A | R1625 | 1D | VR1604 | 2D |
| CR1601 | 3B | Q1654 | 5B | R1626 | 2B | VR1605 | 2D |
| CR1624 | 2B | Q1662 | 5C | | | VR1622 | 1C |
| CR1625 | 2C | Q1664 | 5D | R1631 | 2B | VR1639 | 3D |
| CR1626 | 2C | | | R1633 | 3A | VR1641 | 3C |
| CR1627 | 1B | R1604 | 1C | R1639 | 3C | | |

Figure 6-15. Option 07 DC Inverter circuit board component locations.

## ELECTRICAL

| Component No. | Tektronix Part No. | Serial/Model No. Eff | Dscont | Name & Description | Mfr Code | Mfr Part Number |
|---|---|---|---|---|---|---|
| | | | | CHANGES FROM STANDARD 465B WHEN OPTION 7 IS ADDED | | |
| (CHANGE TO): | | | | | | |
| A4 | 670-5996-02 | B010100 | B033189 | CKT BOARD ASSY:INTERFACE | 80009 | 670-5996-02 |
| A4 | 670-5996-05 | B033190 | | CKT BOARD ASSY:INTERFACE | 80009 | 670-5996-05 |
| (ADD): | | | | | | |
| A4C4501 | 283-0003-00 | | | CAP.,FXD,CER DI:0.01UF,+80-20%,150V | 72982 | 855-558Z5U-103Z |
| A4C4502 | 283-0000-00 | | | CAP.,FXD,CER DI:0.001UF,+100-0%,500V | 72982 | 831-516E102P |
| A4C4503 | 283-0000-00 | | | CAP.,FXD,CER DI:0.001UF,+100-0%,500V | 72982 | 831-516E102P |
| A4C4511 | 283-0003-00 | | | CAP.,FXD,CER DI:0.01UF,+80-20%,150V | 72982 | 855-558Z5U-103Z |
| A4C4513 | 283-0003-00 | | | CAP.,FXD,CER DI:0.01UF,+80-20%,150V | 72982 | 855-558Z5U-103Z |
| A4R4262 | 315-0223-00 | XB011250 | | RES.,FXD,CMPSN:22K OHM,5%,0.25W | 01121 | CB2235 |
| A14 | 670-2744-01 | | | CKT BOARD ASSY:INVERTER | 80009 | 670-2744-01 |
| A14C1601 | 290-0667-00 | | | CAP.,FXD,ELCTLT:330UF,+75-10%,50V | 56289 | 500D158 |
| A14C1603 | 283-0178-00 | | | CAP.,FXD,CER DI:0.1UF,+80-20%,100V | 72982 | 8131N145651 104Z |
| A14C1605 | 290-0531-00 | | | CAP.,FXD,ELCTLT:100UF,20%,10V | 90201 | TDC107M010WLC |
| A14C1609 | 283-0178-00 | | | CAP.,FXD,CER DI:0.1UF,+80-20%,100V | 72982 | 8131N145651 104Z |
| A14C1614 | 290-0573-00 | | | CAP.,FXD,ELCTLT:2.7UF,20%,50V | 56289 | 196D275X0050JA1 |
| A14C1622 | 290-0533-00 | | | CAP.,FXD,ELCTLT:330UF,20%,,6V | 90201 | TDC337M006WLD |
| A14C1626 | 290-0528-00 | | | CAP.,FXD,ELCTLT:15UF,20%,50V | 90201 | TDC156M050WLC |
| A14C1652 | 283-0110-00 | | | CAP.,FXD,CER DI:0.005UF,+80-20%,150V | 56289 | 19C242B |
| A14C1654 | 283-0110-00 | | | CAP.,FXD,CER DI:0.005UF,+80-20%,150V | 56289 | 19C242B |
| A14C1662 | 283-0110-00 | | | CAP.,FXD,CER DI:0.005UF,+80-20%,150V | 56289 | 19C242B |
| A14C1664 | 283-0110-00 | | | CAP.,FXD,CER DI:0.005UF,+80-20%,150V | 56289 | 19C242B |
| A14C1671 | 283-0000-00 | | | CAP.,FXD,CER DI:0.001UF,+100-0%,500V | 72982 | 831-516E102P |
| A14CR1601 | 152-0198-00 | | | SEMICOND DEVICE:SILICON,200V,3A | 04713 | 1N4721 |
| A14CR1624 | 152-0333-00 | | | SEMICOND DEVICE:SILICON,55V,200MA | 80009 | 152-0333-00 |
| A14CR1625 | 152-0107-00 | | | SEMICOND DEVICE:SILICON,400V,400MA | 80009 | 152-0107-00 |
| A14CR1626 | 152-0107-00 | | | SEMICOND DEVICE:SILICON,400V,400MA | 80009 | 152-0107-00 |
| A14CR1627 | 152-0107-00 | | | SEMICOND DEVICE:SILICON,400V,400MA | 80009 | 152-0107-00 |
| A14CR1628 | 152-0107-00 | | | SEMICOND DEVICE:SILICON,400V,400MA | 80009 | 152-0107-00 |
| A14CR1632 | 152-0333-00 | | | SEMICOND DEVICE:SILICON,55V,200MA | 80009 | 152-0333-00 |
| 14CR1634 | 152-0333-00 | | | SEMICOND DEVICE:SILICON,55V,200MA | 80009 | 152-0333-00 |
| A14CR1643 | 152-0198-00 | | | SEMICOND DEVICE:SILICON,200V,3A | 04713 | 1N4721 |
| A14Q1606 | 151-0301-00 | | | TRANSISTOR:SILICON,PNP | 04713 | 2N2907A |
| A14Q1608 | 151-0301-00 | | | TRANSISTOR:SILICON,PNP | 04713 | 2N2907A |
| A14Q1622 | 151-0302-00 | | | TRANSISTOR:SILICON,NPN | 80009 | 151-0302-00 |
| A14Q1626 | 151-0506-00 | | | SCR:SILICON | 03508 | C106B2 |
| A14Q1642 | 151-0302-00 | | | TRANSISTOR:SILICON,NPN | 80009 | 151-0302-00 |
| A14Q1644 | 151-0335-00 | | | TRANSISTOR:SILICON,PNP | 80009 | 151-0335-00 |
| A14Q1652 | 151-0436-00 | | | TRANSISTOR:SILICON,NPN | 80009 | 151-0436-00 |
| A14Q1654 | 151-0436-00 | | | TRANSISTOR:SILICON,NPN | 80009 | 151-0436-00 |
| A14Q1662 | 151-0436-00 | | | TRANSISTOR:SILICON,NPN | 80009 | 151-0436-00 |
| A14Q1664 | 151-0436-00 | | | TRANSISTOR:SILICON,NPN | 80009 | 151-0436-00 |
| A14R1604 | 315-0202-00 | | | RES.,FXD,CMPSN:2K OHM,5%,0.25W | 01121 | CB2025 |
| A14R1605 | 315-0752-00 | | | RES.,FXD,CMPSN:7.5K OHM,5%,0.25W | 01121 | CB7525 |
| A14R1607 | 315-0272-00 | | | RES.,FXD,CMPSN:2.7K OHM,5%,0.25W | 01121 | CB2725 |
| A14R1609 | 315-0511-00 | | | RES.,FXD,CMPSN:510 OHM,5%,0.25W | 01121 | CB5115 |

| Component No. | Tektronix Part No. | Serial/Model No. Eff | Dscont | Name & Description | Mfr Code | Mfr Part Number |
|---|---|---|---|---|---|---|
| A14R1611 | 315-0511-00 | | | RES.,FXD,CMPSN:510 OHM,5%,0.25W | 01121 | CB5115 |
| A14R1613 | 311-1248-00 | | | RES.,VAR,NONWIR:500 OHM,10%,0.50W | 73138 | 72X-23-0-501K |
| A14R1614 | 315-0202-00 | | | RES.,FXD,CMPSN:2K OHM,5%,0.25W | 01121 | CB2025 |
| A14R1617 | 315-0102-00 | | | RES.,FXD,CMPSN:1K OHM,5%,0.25W | 01121 | CB1025 |
| A14R1622 | 315-0102-00 | | | RES.,FXD,CMPSN:1K OHM,5%,0.25W | 01121 | CB1025 |
| A14R1623 | 315-0103-00 | | | RES.,FXD,CMPSN:10K OHM,5%,0.25W | 01121 | CB1035 |
| A14R1624 | 315-0302-00 | | | RES.,FXD,CMPSN:3K OHM,5%,0.25W | 01121 | CB3025 |
| A14R1625 | 316-0101-00 | | | RES.,FXD,CMPSN:100 OHM,10%,0.25W | 01121 | CB1011 |
| A14R1626 | 308-0450-00 | | | RES.,FXD,WW:70 OHM,1%,3W | 91637 | RS2B-B70R00F |
| A14R1627 | 315-0271-00 | | | RES.,FXD,CMPSN:270 OHM,5%,0.25W | 01121 | CB2715 |
| A14R1631 | 308-0450-00 | | | RES.,FXD,WW:70 OHM,1%,3W | 91637 | RS2B-B70R00F |
| A14R1633 | 311-1501-00 | | | RES.,VAR,NONWIR:20 OHM,10%,0.50W | 73138 | 72-37-0 |
| A14R1639 | 315-0153-00 | | | RES.,FXD,CMPSN:15K OHM,5%,0.25W | 01121 | CB1535 |
| A14R1640 | 315-0102-00 | | | RES.,FXD,CMPSN:1K OHM,5%,0.25W | 01121 | CB1025 |
| A14R1641 | 315-0153-00 | | | RES.,FXD,CMPSN:15K OHM,5%,0.25W | 01121 | CB1535 |
| A14R1642 | 315-0470-00 | | | RES.,FXD,CMPSN:47 OHM,5%,0.25W | 01121 | CB4705 |
| A14R1645 | 307-0113-00 | | | RES.,FXD,CMPSN:5.1 OHM,5%,0.25W | 01121 | CB51G5 |
| A14R1652 | 308-0459-00 | | | RES.,FXD,WW:1.1 OHM,5%,3W | 91637 | RS2B-D1R100J |
| A14R1654 | 308-0459-00 | | | RES.,FXD,WW:1.1 OHM,5%,3W | 91637 | RS2B-D1R100J |
| A14R1662 | 308-0459-00 | | | RES.,FXD,WW:1.1 OHM,5%,3W | 91637 | RS2B-D1R100J |
| A14R1664 | 308-0459-00 | | | RES.,FXD,WW:1.1 OHM,5%,3W | 91637 | RS2B-D1R100J |
| A14T1601 | 120-0637-00 | | | XFMR,TOROID:5 TURNS BIFILAR | 80009 | 120-0637-00 |
| A14T1631 | 120-0852-00 | | | XFMR,TOROID:2 WINDINGS | 80009 | 120-0852-00 |
| A14VR1604 | 152-0306-00 | | | SEMICOND DEVICE:ZENER,0.4W,9.1V,5% | 80009 | 152-0306-00 |
| A14VR1605 | 152-0306-00 | | | SEMICOND DEVICE:ZENER,0.4W,9.1V,5% | 80009 | 152-0306-00 |
| A14VR1622 | 152-0241-00 | | | SEMICOND DEVICE:ZENER,0.4W,33V,5% | 80009 | 152-0241-00 |
| A14VR1639 | 152-0279-00 | | | SEMICOND DEVICE:ZENER,0.4W,5.1V,5% | 80009 | 152-0279-00 |
| A14VR1641 | 152-0279-00 | | | SEMICOND DEVICE:ZENER,0.4W,5.1V,5% | 80009 | 152-0279-00 |
| | | | | CHASSIS PARTS | | |
| C1672 | 283-0263-00 | | | CAP.,FXD,CER DI:0.0022UF,20%,3000V | 56289 | 33C319 |
| | ----- ----- | | | (MOUNTED ON REAR PANEL. NOT USED WHEN | | |
| | ----- ----- | | | INSTR IS EQUIPPED WITH BOTH OPTION 4 | | |
| | ----- ----- | | | AND OPTION 7) | | |
| C1674 | 283-0263-00 | | | CAP.,FXD,CER DI:0.0022UF,20%,3000V | 56289 | 33C319 |
| C1674 | ----- ----- | | | (SEE FOOTNOTE ON C1672) | | |
| C1681 | 283-0000-00 | | | CAP.,FXD,CER DI:0.001UF,+100-0%,500V | 72982 | 831-516E102P |
| | ----- ----- | | | (SEE FOOTNOTE ON C1672) | | |
| C1682 | 283-0000-00 | | | CAP.,FXD,CER DI:0.001UF,+100-0%,500V | 72982 | 831-516E102P |
| | ----- ----- | | | (WHEN EQUIPPED WITH BOTH OPTION 4 AND | | |
| | ----- ----- | | | OPTION 7, ONLY ONE SET OF THESE CAPS | | |
| | ----- ----- | | | IS USED) | | |
| C1683 | 283-0003-00 | | | CAP.,FXD,CER DI:0.01UF,+80-20%,150V | 72982 | 855-558Z5U-103Z |
| | ----- ----- | | | (SEE FOOTNOTE ON C1682) | | |
| C1684 | 283-0003-00 | | | CAP.,FXD,CER DI:0.01UF,+80-20%,150V | 72982 | 855-558Z5U-103Z |
| | ----- ----- | | | (SEE FOOTNOTE ON C1682) | | |
| C1685 | 283-0003-00 | | | CAP.,FXD,CER DI:0.01UF,+80-20%,150V | 72982 | 855-558Z5U-103Z |
| | ----- ----- | | | (SEE FOOTNOTE ON C1682) | | |
| F1601 | 159-0038-00 | | | FUSE,CARTRIDGE:3AG,15A,32V,FAST-BLOW | 71400 | MDL 15A |
| P1601 | 131-1333-00 | | | CONNECTOR,RCPT,:POWER | 80009 | 131-1333-00 |
| S1601 | 260-0834-00 | | | SWITCH,TOGGLE:DPDT,5A,125VAC,0.25-40 THD | 09353 | U21-SHZQE |

| Component No. | Tektronix Part No. | Serial/Model No. Eff | Dscont | Name & Description | Mfr Code | Mfr Part Number |
|---|---|---|---|---|---|---|
| S1665 | 105-0479-00 | | | ACTUATOR,SWITCH:SLIDE,INVERTER | 80009 | 105-0479-00 |
| S1665A | 260-0760-00 | | | SWITCH,SENS:10A,250V,SPDT,SNAP ACTION | 01963 | E62-10A |
| S1665B | 260-0760-00 | | | SWITCH,SENS:10A,250V,SPDT,SNAP ACTION | 01963 | E62-10A |
| S1665C | 260-0760-00 | | | SWITCH,SENS:10A,250V,SPDT,SNAP ACTION | 01963 | E62-10A |
| S1665D | 260-0760-00 | | | SWITCH,SENS:10A,250V,SPDT,SNAP ACTION | 01963 | E62-10A |
| S1665E | 260-0760-00 | | | SWITCH,SENS:10A,250V,SPDT,SNAP ACTION | 01963 | E62-10A |
| S1665F | 260-0760-00 | | | SWITCH,SENS:10A,250V,SPDT,SNAP ACTION | 01963 | E62-10A |

## MECHANICAL

| Fig. & Index No. | Tektronix Part No. | Serial/Model No. Eff | Dscont | Qty | 1 2 3 4 5 Name & Description | Mfr Code | Mfr Part Number |
|---|---|---|---|---|---|---|---|
| -1 | 441-1171-00 | | | 1 | CHASSIS,SCOPE:INVERTER | 80009 | 441-1171-00 |
| | | | | | (ATTACHING PARTS) | | |
| | 211-0008-00 | | | 2 | SCREW,MACHINE:4-40 X 0.25 INCH,PNH STL | 83385 | OBD |
| | 210-0938-00 | | | 2 | WASHER,FLAT:0.109 ID X 0.25 INCH OD,STL | 75497 | AN960-3 |
| | | | | | - - - * - - - | | |
| -2 | ----- ----- | | | 1 | CKT BOARD ASSY:INVERTER(SEE A14 EPL) | | |
| -3 | 136-0252-04 | | | 15 | . SOCKET,PIN TERM:0.188 INCH LONG | 22526 | 75060-007 |
| -4 | ----- ----- | | | 1 | . XFMR,TOROID:(SEE T1601 EPL) | | |
| | | | | | (ATTACHING PARTS) | | |
| -5 | 343-0443-00 | | | 1 | . RETAINER,XFMR: | 80009 | 343-0443-00 |
| -6 | 212-0011-00 | | | 1 | . SCREW,MACHINE:8-32 X 0.750 INCH,FLH STL | 83385 | OBD |
| -7 | 210-0409-00 | | | 1 | . NUT,PLAIN,HEX.:8-32 X 0.312 INCH,BRS | 73743 | 3046-402 |
| | | | | | - - - * - - - | | |
| | | | | | (ATTACHING PARTS FOR CKT BD) | | |
| -8 | 211-0116-00 | | | 2 | SCR,ASSEM WSHR:4-40 X 0.312 INCH,PNH BRS | 83385 | OBD |
| | | | | | - - - * - - - | | |
| -9 | ----- ----- | | | 4 | TRANSISTOR:(SEE Q1652,Q1654,Q1662,1664 EPL) | | |
| | | | | | (ATTACHING PARTS) | | |
| -10 | 210-0586-00 | | | 3 | NUT,PLAIN,EXT W:4-40 X 0.25 INCH,STL | 78189 | 211-041800-00 |
| -11 | 343-0451-00 | | | 1 | RETAINER,XSTR: | 80009 | 343-0451-00 |
| -12 | 342-0195-00 | | | 1 | INSULATOR,PLATE:0.70 X 3 INCHES LONG | 08530 | OBD |
| | | | | | - - - * - - - | | |
| -13 | 348-0141-00 | | | 1 | GROMMET,PLASTIC:U-SHP,0.625 X0.658 INCH | 80009 | 348-0141-00 |
| -14 | 348-0055-00 | | | 1 | GROMMET,PLASTIC:0.25 INCH DIA | 80009 | 348-0055-00 |
| -15 | 352-0031-00 | | | 1 | FUSEHOLDER:3AG FUSE | 75915 | 357001 |
| | | | | | (ATTACHING PARTS) | | |
| -16 | 211-0507-00 | | | 1 | SCREW,MACHINE:6-32 X 0.312 INCH,PNH STL | 83385 | OBD |
| -17 | 210-0006-00 | | | 1 | WASHER,LOCK:#6 INTL,0.018THK,STL CD PL | 78189 | 1206-00-00-0541C |
| -18 | 210-0407-00 | | | 1 | NUT,PLAIN,HEX.:6-32 X 0.25 INCH,BRS | 73743 | 3038-0228-402 |
| | | | | | - - - * - - - | | |
| | 342-0228-00 | | | 1 | INSULATOR,FILM:0.70 X 1.150 INCH LONG | 80009 | 342-0228-00 |
| -19 | 407-1341-00 | | | 1 | BRACKET,ELEC SW:ALUMINUM | 80009 | 407-1341-00 |
| | | | | | (ATTACHING PARTS) | | |
| -20 | 211-0101-00 | | | 2 | SCREW,MACHINE:4-40 X 0.25" 100 DEG,FLH STL | 83385 | OBD |
| | | | | | - - - * - - - | | |
| -21 | 105-0479-00 | | | 1 | ACTUATOR,SWITCH:SLIDE,INVERTER | 80009 | 105-0479-00 |
| -22 | 260-0760-00 | | | 6 | SWITCH,SENS:10A,250V,SPDT,SNAP ACTION | 01963 | E62-10A |
| | | | | | (ATTACHING PARTS) | | |
| -23 | 211-0212-00 | | | 2 | SCREW,MACHINE:2-56 X 1.75 INCH,PNH STL | 83385 | OBD |
| -24 | 210-0405-00 | | | 1 | NUT,PLAIN,HEX.:2-56 X 0.188 INCH,BRS | 73743 | 2X12157-402 |
| | | | | | - - - * - - - | | |
| -25 | 386-2649-00 | | | 1 | PL,ACTR GUIDE:INVERTER | 80009 | 386-2649-00 |
| | 214-1925-00 | | | 1 | SPRING,SW ACT:POWER SOURCE | 80009 | 214-1925-00 |
| -26 | ----- ----- | | | 1 | SWITCH,TOGGLE:(SEE S1665 EPL) | | |
| | | | | | (ATTACHING PARTS) | | |
| -27 | 210-0562-00 | | | 1 | NUT,PLAIN,HEX.:0.25-40 X 0.312 INCH,BBS | 73743 | 2X20224-402 |
| -28 | 210-0046-00 | | | 1 | WASHER,LOCK:INTL,0.26 ID X 0.40" OD,STL | 78189 | 1214-05-00-0541C |
| | | | | | - - - * - - - | | |
| | 179-1962-00 | | | 1 | WIRING HARNESS: | 80009 | 179-1962-00 |
| | 348-0005-00 | | | 1 | GROMMET,RUBBER:0.50 INCH DIA | 70485 | 230 |
| | 200-1414-11 | | | 1 | COVER,SCOPE:REAR | 80009 | 200-1414-11 |
| | 131-1333-00 | | | 1 | CONNECTOR,RCPT,:POWER | 80009 | 131-1333-00 |
| | | | | | (ATTACHING PARTS) | | |
| | 211-0101-00 | | | 2 | SCREW,MACHINE:4-40 X 0.25" 100 DEG,FLH STL | 83385 | OBD |
| | 348-0365-00 | | | 4 | FOOT,CABINET:PLASTIC,W/LATCH GROOVE | 80009 | 348-0365-00 |
| | | | | | - - - * - - - | | |

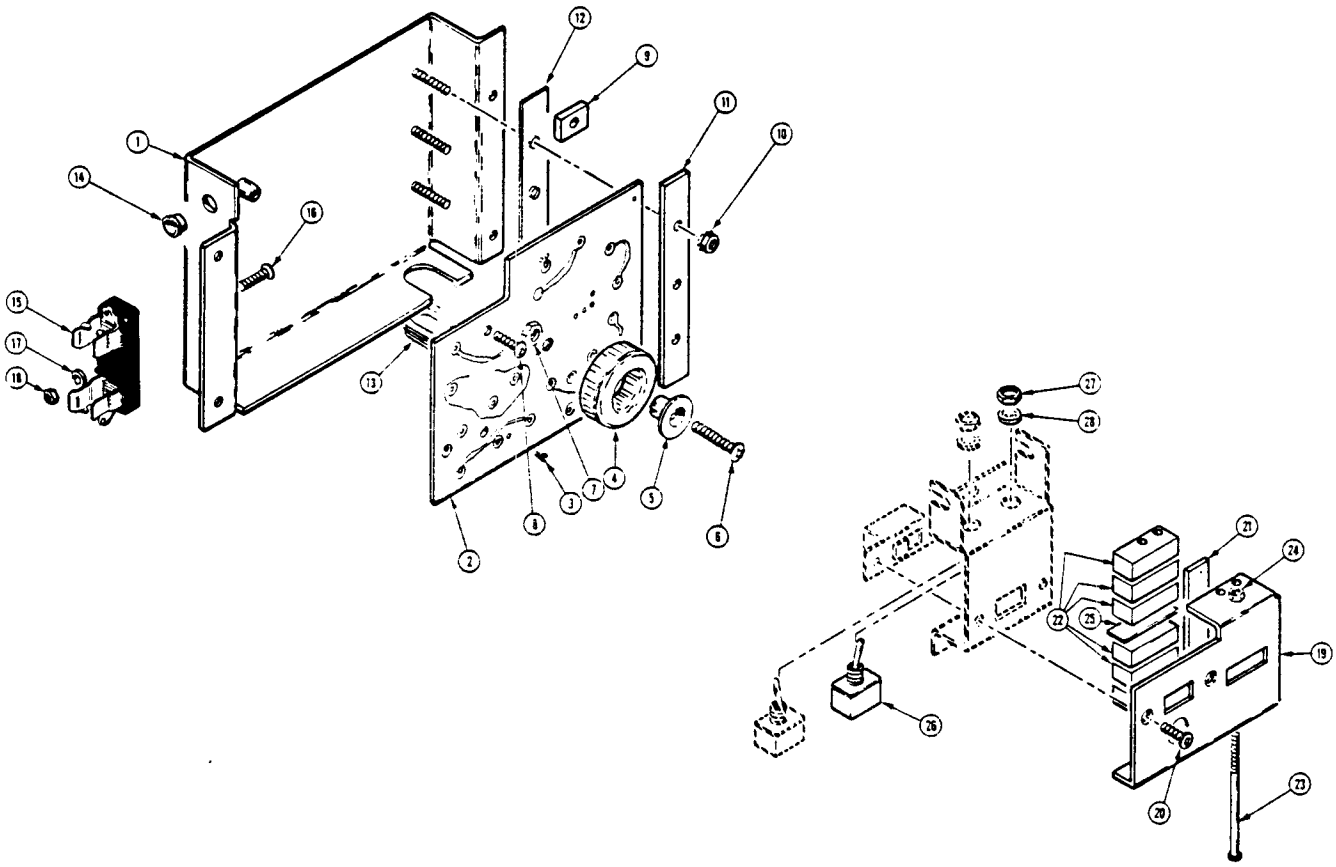
1
2
3
4
5
6
7
8
9
10
11
12
13
14
15
16
17
18
19
20
21
22
23
24
25
26
27
28

# OPTION 78
# TYPE P11 PHOSPHOR

This option adds a Type P11 phosphor crt to the instrument.

If this option is being added to an instrument which is already equipped with a different phosphor, or if the cathode-ray tube requires replacement, use the following procedure:

1. Follow the crt removal and installation procedure in the Maintenance section of this manual.

2. After completing crt installation, check Table 4-6 (Adjustment Interactions), in the Adjustment Procedure of this manual, for calibration adjustments which may require readjustment.

## PARTS LIST CHANGES

**Delete**

| | | |
|---|---|---|
| V14000 | 154-0676-10 | CRT, P31 Phosphor |

**Add**

| | | |
|---|---|---|
| V14000 | 154-0676-14 | CRT, P11 Phosphor |

# REPLACEABLE ELECTRICAL PARTS

## PARTS ORDERING INFORMATION

Replacement parts are available from or through your local Tektronix, Inc. Field Office or representative.

Changes to Tektronix instruments are sometimes made to accommodate improved components as they become available, and to give you the benefit of the latest circuit improvements developed in our engineering department. It is therefore important, when ordering parts, to include the following information in your order: Part number, instrument type or number, serial number, and modification number if applicable.

If a part you have ordered has been replaced with a new or improved part, your local Tektronix, Inc. Field Office or representative will contact you concerning any change in part number.

Change information, if any, is located at the rear of this manual.

## LIST OF ASSEMBLIES

A list of assemblies can be found at the beginning of the Electrical Parts List. The assemblies are listed in numerical order. When the complete component number of a part is known, this list will identify the assembly in which the part is located.

## CROSS INDEX-MFR. CODE NUMBER TO MANUFACTURER

The Mfr. Code Number to Manufacturer index for the Electrical Parts List is located immediately after this page. The Cross Index provides codes, names and addresses of manufacturers of components listed in the Electrical Parts List.

## ABBREVIATIONS

Abbreviations conform to American National Standard Y1.1.

## COMPONENT NUMBER (column one of the Electrical Parts List)

A numbering method has been used to identify assemblies, subassemblies and parts. Examples of this numbering method and typical expansions are illustrated by the following:

**Example a.**

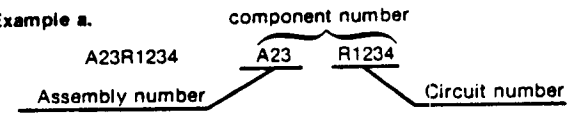


**Read: Resistor 1234 of Assembly 23**

**Example b.**

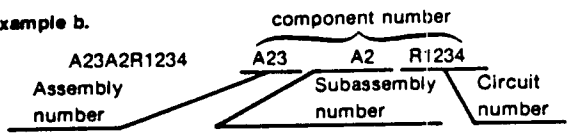


**Read: Resistor 1234 of Subassembly 2 of Assembly 23**

Only the circuit number will appear on the diagrams and circuit board illustrations. Each diagram and circuit board illustration is clearly marked with the assembly number. Assembly numbers are also marked on the mechanical exploded views located in the Mechanical Parts List. The component number is obtained by adding the assembly number prefix to the circuit number.

The Electrical Parts List is divided and arranged by assemblies in numerical sequence (e.g., assembly A1 with its subassemblies and parts, precedes assembly A2 with its subassemblies and parts).

Chassis-mounted parts have no assembly number prefix and are located at the end of the Electrical Parts List.

## TEKTRONIX PART NO. (column two of the Electrical Parts List)

Indicates part number to be used when ordering replacement part from Tektronix.

## SERIAL/MODEL NO. (columns three and four of the Electrical Parts List)

Column three (3) indicates the serial number at which the part was first used. Column four (4) indicates the serial number at which the part was removed. No serial number entered indicates part is good for all serial numbers.

## NAME & DESCRIPTION (column five of the Electrical Parts List)

In the Parts List, an Item Name is separated from the description by a colon (:). Because of space limitations, an Item Name may sometimes appear as incomplete. For further Item Name identification, the U.S. Federal Cataloging Handbook H6-1 can be utilized where possible.

## MFR. CODE (column six of the Electrical Parts List)

Indicates the code number of the actual manufacturer of the part. (Code to name and address cross reference can be found immediately after this page.)

## MFR. PART NUMBER (column seven of the Electrical Parts List)

Indicates actual manufacturers part number.



@

## CROSS INDEX—MFR. CODE NUMBER TO MANUFACTURER

| Mfr. Code | Manufacturer | Address | City, State, Zip |
|---|---|---|---|
| 00779 | AMP, INC. | P O BOX 3608 | HARRISBURG, PA 17105 |
| 00853 | SANGAMO ELECTRIC CO., S. CAROLINA DIV. | P O BOX 128 | PICKENS, SC 29671 |
| 01121 | ALLEN-BRADLEY COMPANY | 1201 2ND STREET SOUTH | MILWAUKEE, WI 53204 |
| 01295 | TEXAS INSTRUMENTS, INC., SEMICONDUCTOR GROUP | P O BOX 5012, 13500 N CENTRAL EXPRESSWAY | DALLAS, TX 75222 |
| 01963 | CHERRY ELECTRICAL PRODUCTS CORPORATION | 3600 SUNSET AVENUE | WAUKEGAN, IL 60085 |
| 02111 | SPECTROL ELECTRONICS CORPORATION | 17070 EAST GALE AVENUE | CITY OF INDUSTRY, CA 91745 |
| 03508 | GENERAL ELECTRIC COMPANY, SEMI-CONDUCTOR PRODUCTS DEPARTMENT | ELECTRONICS PARK | SYRACUSE, NY 13201 |
| 04222 | AVX CERAMICS, DIVISION OF AVX CORP. | P O BOX 867, 19TH AVE. SOUTH | MYRTLE BEACH, SC 29577 |
| 04713 | MOTOROLA, INC., SEMICONDUCTOR PROD. DIV. | 5005 E MCDOWELL RD,PO BOX 20923 | PHOENIX, AZ 85036 |
| 05397 | UNION CARBIDE CORPORATION, MATERIALS SYSTEMS DIVISION | 11901 MADISON AVENUE | CLEVELAND, OH 44101 |
| 07263 | FAIRCHILD SEMICONDUCTOR, A DIV. OF FAIRCHILD CAMERA AND INSTRUMENT CORP. | 464 ELLIS STREET | MOUNTAIN VIEW, CA 94042 |
| 08806 | GENERAL ELECTRIC CO., MINIATURE LAMP PRODUCTS DEPARTMENT | NELA PARK | CLEVELAND, OH 44112 |
| 09353 | C AND K COMPONENTS, INC. | 103 MORSE STREET | WATERTOWN, MA 02172 |
| 12697 | CLAROSTAT MFG. CO., INC. | LOWER WASHINGTON STREET | DOVER, NH 03820 |
| 12969 | UNITRODE CORPORATION | 580 PLEASANT STREET | WATERTOWN, MA 02172 |
| 14193 | CAL-R, INC. | 1601 OLYMPIC BLVD. | SANTA MONICA, CA 90404 |
| 14298 | AMERICAN COMPONENTS, INC., AN INSILCO COMPANY | 8TH AVE. AT HARRY STREET | CONSHOHOCKEN, PA 19428 |
| 15454 | RODAN INDUSTRIES, INC. | 2905 BLUE STAR ST. | ANAHEIM, CA 92806 |
| 16546 | U.S. CAPACITOR CORP/CENTRALAB ELECTRONICS DIV. | 4561 COLORADO | LOS ANGELES, CA 90039 |
| 24546 | CORNING GLASS WORKS, ELECTRONIC COMPONENTS DIVISION | 550 HIGH STREET | BRADFORD, PA 16701 |
| 25088 | SIEMENS CORP. | 186 WOOD AVE. S | ISELIN, NJ 08830 |
| 32293 | INTERSIL, INC. | 10900 N. TANTAU AVE. | CUPERTINO, CA 95014 |
| 32997 | BOURNS, INC., TRIMPOT PRODUCTS DIV. | 1200 COLUMBIA AVE. | RIVERSIDE, CA 92507 |
| 50157 | MIDWEST COMPONENTS INC. | P. O. BOX 787<br>1981 PORT CITY BLVD. | MUSKEGON, MI 49443 |
| 50437 | RELIANCE STEEL PRODUCTS COMPANY | 3700 WALNUT STREET | MCKEESPORT, PA 15132 |
| 50522 | MONSANTO CO., ELECTRONIC SPECIAL PRODUCTS | 3400 HILLVIEW AVENUE | PALO ALTO, CA 94304 |
| 51642 | CENTRE ENGINEERING INC. | 2820 E COLLEGE AVENUE | STATE COLLEGE, PA 16801 |
| 52763 | STETTNER-TRUSH, INC. | 67 ALBANY STREET | CAZENOVIA, NY 13035 |
| 53184 | XCITON CORPORATION | 5 HEMLOCK STREET | LATHAM, NY 12110 |
| 55210 | GETTIG ENG. AND MFG. COMPANY | PO BOX 85, OFF ROUTE 45 | SPRING MILLS, PA 16875 |
| 55680 | NICHICON/AMERICA/CORP. | 6435 N PROESEL AVENUE | CHICAGO, IL 60645 |
| 56289 | SPRAGUE ELECTRIC CO. | | NORTH ADAMS, MA 01247 |
| 71400 | BUSSMAN MFG., DIVISION OF MCGRAW-EDISON CO. | 2536 W. UNIVERSITY ST. | ST. LOUIS, MO 63107 |
| 71590 | CENTRALAB ELECTRONICS, DIV. OF GLOBE-UNION, INC. | P O BOX 858 | FORT DODGE, IA 50501 |
| 72982 | ERIE TECHNOLOGICAL PRODUCTS, INC. | 644 W. 12TH ST. | ERIE, PA 16512 |
| 73138 | BECKMAN INSTRUMENTS, INC., HELIPOT DIV. | 2500 HARBOR BLVD. | FULLERTON, CA 92634 |
| 73899 | JFD ELECTRONICS COMPONENTS CORP. | PINETREE ROAD | OXFORD, NC 27565 |
| 74276 | SIGNALITE DIV., GENERAL INSTRUMENT CORP. | 1933 HECK AVE. | NEPTUNE, NJ 07753 |
| 74970 | JOHNSON, E. F., CO. | 299 10TH AVE. S. W. | WASECA, MN 56093 |
| 75042 | TRW ELECTRONIC COMPONENTS, IRC FIXED RESISTORS, PHILADELPHIA DIVISION | 401 N. BROAD ST. | PHILADELPHIA, PA 19108 |
| 76493 | BELL INDUSTRIES, INC., MILLER, J. W., DIV. | 19070 REYES AVE., P O BOX 5825 | COMPTON, CA 90224 |
| 80009 | TEKTRONIX, INC. | P O BOX 500 | BEAVERTON, OR 97077 |
| 80031 | ELECTRA-MIDLAND CORP., MEPCO DIV. | 22 COLUMBIA ROAD | MORRISTOWN, NJ 07960 |
| 82389 | SWITCHCRAFT, INC. | 5555 N. ELSTON AVE. | CHICAGO, IL 60630 |
| 90201 | MALLORY CAPACITOR CO., DIV. OF P. R. MALLORY AND CO., INC. | 3029 E. WASHINGTON STREET<br>P. O. BOX 372 | INDIANAPOLIS, IN 46206 |
| 91637 | DALE ELECTRONICS, INC. | P. O. BOX 609 | COLUMBUS, NE 68601 |
| 93410 | ESSEX INTERNATIONAL, INC., CONTROLS DIV. LEXINGTON PLANT | P. O. BOX 1007 | MANSFIELD, OH 44903 |

| Component No. | Tektronix Part No. | Serial/Model No. Eff | Dscont | Name & Description | Mfr Code | Mfr Part Number |
|---|---|---|---|---|---|---|
| A1 | 670-5997-00 | | | CKT BOARD ASSY:VERTICAL PREAMP | 80009 | 670-5997-00 |
| A2 | 670-5999-00 | B010100 | B033189 | CKT BOARD ASSY:VERTICAL OUTPUT | 80009 | 670-5999-00 |
| A2 | 670-6385-00 | B033190 | | CKT BOARD ASSY:VERTICAL OUTPUT | 80009 | 670-6385-00 |
| A3 | 670-6003-00 | | | CKT BOARD ASSY:ATTENUATOR | 80009 | 670-6003-00 |
| A4 | 670-5996-00 | B010100 | B033189 | CKT BOARD ASSY:INTERFACE | 80009 | 670-5996-00 |
| A4 | 670-5996-03 | B033190 | | CKT BOARD ASSY:INTERFACE | 80009 | 670-5996-03 |
| A5 | 670-5998-00 | | | CKT BOARD ASSY:VERTICAL MODE SWITCH | 80009 | 670-5998-90 |
| A6 | 670-6001-00 | | | CKT BOARD ASSY:TIMING | 80009 | 670-6001-00 |
| A7 | 670-6000-00 | | | CKT BOARD ASSY:TRIGGER GEN & SWEEP LOGIC | 80009 | 670-6000-00 |
| A8 | 670-6002-01 | | | CKT BOARD ASSY:FAN MOTOR | 80009 | 670-6002-01 |
| A9 | 670-6004-00 | | | CKT BOARD ASSY:PROBE CODING | 80009 | 670-6004-00 |
| A10 | 670-2279-00 | | | CKT BOARD ASSY:CRT SCALE ILLUMINATION | 80009 | 670-2279-00 |
| A1 | ----- ----- | | | CKT BOARD ASSY:VERTICAL PREAMP | | |
| A1C1016 | 281-0763-00 | XB022260 | | CAP.,FXD,CER DI:47PF,10%,100V | 72982 | 8035D9AADC1G470K |
| A1C1026 | 281-0815-00 | | | CAP.,FXD,CER DI:0.027UF,20%,50V | 72982 | 8005D9AABW5R273M |
| A1C1037 | 281-0815-00 | | | CAP.,FXD,CER DI:0.027UF,20%,50V | 72982 | 8005D9AABW5R273M |
| A1C1048 | 281-0812-00 | | | CAP.,FXD,CER DI:1000PF,10%,100V | 72982 | 8035D9AADX7R102K |
| A1C1071 | 281-0813-00 | | | CAP.,FXD CER DI:0.047UF,20%,100V | 04222 | GC705-E-473M |
| A1C1072 | 281-0786-00 | | | CAP.,FXD,CER DI:150PF,10%,100V | 72982 | 8035D2AADX5P151K |
| A1C1075 | 281-0773-00 | | | CAP.,FXD,CER DI:0.01UF,10%,100V | 72982 | 8005H9AADW5R103K |
| A1C1091 | 281-0773-00 | | | CAP.,FXD,CER DI:0.01UF,10%,100V | 72982 | 8005H9AADW5R103K |
| A1C1095 | 281-0815-00 | | | CAP.,FXD,CER DI:0.027UF,20%,50V | 72982 | 8005D9AABW5R273M |
| A1C1112 | 281-0798-00 | | | CAP.,FXD,CER DI:51PF,1%,100V | 72982 | 8035D2AADC1G510G |
| A1C1119 | 290-0517-00 | | | CAP.,FXD,ELCTLT:6.8UF,20%,35V | 56289 | 196D685X0035KA1 |
| A1C1135 | 290-0517-00 | | | CAP.,FXD,ELCTLT:6.8UF,20%,35V | 56289 | 196D685X0035KA1 |
| A1C1142 | 281-0823-00 | | | CAP.,FXD,CER DI:470PF,10%,50V | 51642 | G1710050NP0471K |
| A1C1144 | 281-0763-00 | B010100 | B010239 | CAP.,FXD,CER DI:47PF,10%,100V | 72982 | 8035D9AADC1G470K |
| A1C1144 | 281-0819-00 | B010240 | | CAP.,FXD,CER DI:33PF,5%,50V | 72982 | 8035BC0G330J |
| A1C1152 | 281-0809-00 | | | CAP.,FXD,CER DI:200PF,5%,100V | 72982 | 8013T2ADDC1G201J |
| A1C1173 | 283-0114-00 | | | CAP.,FXD,CER DI:0.0015UF,5%,200V | 72982 | 805-509B152J |
| A1C1192 | 281-0205-00 | | | CAP.,VAR,PLSTC:4-65PF,100V | 80031 | 2810C5R565QJ02F0 |
| A1C1287 | 281-0815-00 | | | CAP.,FXD,CER DI:0.027UF,20%,50V | 72982 | 8005D9AABW5R273M |
| A1C1306 | 281-0579-00 | | | CAP.,FXD,CER DI:21PF,5%,500V | 72982 | 301-050C0G0210J |
| A1C1334 | 281-0773-00 | | | CAP.,FXD,CER DI:0.01UF,10%,100V | 72982 | 8005H9AADW5R103K |
| A1C1342 | 281-0204-00 | | | CAP.,VAR,PLSTC:2-22PF,100V | 80031 | 287C00222MJ02 |
| A1C1353 | 281-0809-00 | | | CAP.,FXD,CER DI:200PF,5%,100V | 72982 | 8013T2ADDC1G201J |
| A1C1384 | 281-0815-00 | | | CAP.,FXD,CER DI:0.027UF,20%,50V | 72982 | 8005D9AABW5R273M |
| A1C1385 | 281-0815-00 | | | CAP.,FXD,CER DI:0.027UF,20%,50V | 72982 | 8005D9AABW5R273M |
| A1C1396 | 290-0517-00 | | | CAP.,FXD,ELCTLT:6.8UF,20%,35V | 56289 | 196D685X0035KA1 |
| A1C1398 | 281-0547-00 | | | CAP.,FXD,CER DI:2.7PF,10%,500V | 72982 | 301-000C0J0279C |
| A1C1405 | 281-0589-00 | | | CAP.,FXD,CER DI:170PF,5%,500V | 72982 | 301000Z5D0171J |
| A1C1422 | 281-0823-00 | | | CAP.,FXD,CER DI:470PF,10%,50V | 51642 | G1710050NP0471K |
| A1C1462 | 290-0517-00 | | | CAP.,FXD,ELCTLT:6.8UF,20%,35V | 56289 | 196D685X0035KA1 |
| A1C1464 | 290-0517-00 | | | CAP.,FXD,ELCTLT:6.8UF,20%,35V | 56289 | 196D685X0035KA1 |
| A1C1466 | 290-0517-00 | | | CAP.,FXD,ELCTLT:6.8UF,20%,35V | 56289 | 196D685X0035KA1 |
| A1C1502 | 281-0773-00 | | | CAP.,FXD,CER DI:0.01UF,10%,100V | 72982 | 8005H9AADW5R103K |
| A1C1517 | 281-0773-00 | | | CAP.,FXD,CER DI:0.01UF,10%,100V | 72982 | 8005H9AADW5R103K |
| A1C1521 | 281-0823-00 | | | CAP.,FXD,CER DI:470PF,10%,50V | 51642 | G1710050NP0471K |
| A1C1525 | 290-0527-00 | | | CAP.,FXD,ELCTLT:15UF,20%,20V | 90201 | TDC156M020FL |
| A1C1586 | 283-0114-00 | | | CAP.,FXD,CER DI:0.0015UF,5%,200V | 72982 | 805-509B152J |
| A1C1587 | 281-0786-00 | | | CAP.,FXD,CER DI:150PF,10%,100V | 72982 | 8035D2AADX5P151K |
| A1C1592 | 281-0773-00 | | | CAP.,FXD,CER DI:0.01UF,10%,100V | 72982 | 8005H9AADW5R103K |

| Component No. | Tektronix Part No. | Serial/Model No. Eff | Dscont | Name & Description | Mfr Code | Mfr Part Number |
|---|---|---|---|---|---|---|
| A1C1597 | 281-0815-00 | | | CAP.,FXD,CER DI:0.027UF,20%,50V | 72982 | 8005D9AABW5R273M |
| A1C1611 | 281-0814-00 | | | CAP.,FXD,CER DI:100PF,10%,100V | 72982 | 8035D2AADC0G101K |
| A1C1615 | 281-0814-00 | | | CAP.,FXD,CER DI:100PF,10%,100V | 72982 | 8035D2AADC0G101K |
| A1C1623 | 281-0814-00 | | | CAP.,FXD,CER DI:100PF,10%,100V | 72982 | 8035D2AADC0G101K |
| A1C1643 | 281-0204-00 | | | CAP.,VAR,PLSTC:2-22PF,100V | 80031 | 287C00222MJ02 |
| A1C1647 | 281-0809-00 | | | CAP.,FXD,CER DI:200PF,5%,100V | 72982 | 8013T2ADDC1G201J |
| A1C1682 | 281-0773-00 | | | CAP.,FXD,CER DI:0.01UF,10%,100V | 72982 | 8005H9AADW5R103K |
| A1C1683 | 281-0813-00 | | | CAP.,FXD CER DI:0.047UF,20%,100V | 04222 | GC705-E-473M |
| A1C1690 | 281-0205-00 | | | CAP.,VAR,PLSTC:4-65PF,100V | 80031 | 2810C5R565QJ02F0 |
| A1C1714 | 281-0814-00 | | | CAP.,FXD,CER DI:100PF,10%,100V | 72982 | 8035D2AADC0G101K |
| A1C1723 | 281-0814-00 | | | CAP.,FXD,CER DI:100PF,10%,100V | 72982 | 8035D2AADC0G101K |
| A1C1726 | 281-0814-00 | | | CAP.,FXD,CER DI:100PF,10%,100V | 72982 | 8035D2AADC0G101K |
| A1C1734 | 290-0527-00 | | | CAP.,FXD,ELCTLT:15UF,20%,20V | 90201 | TDC156M020FL |
| A1C1787 | 281-0815-00 | | | CAP.,FXD,CER DI:0.027UF,20%,50V | 72982 | 8005D9AABW5R273M |
| A1C1804 | 281-0630-00 | | | CAP.,FXD,CER DI:390PF,5%,500V | 72982 | 630000Y5D391J |
| A1C1813 | 281-0809-00 | | | CAP.,FXD,CER DI:200PF,5%,100V | 72982 | 8013T2ADDC1G201J |
| A1C1822 | 281-0763-00 | | | CAP.,FXD,CER DI:47PF,10%,100V | 72982 | 8035D9AADC1G470K |
| A1C1827 | 281-0798-00 | | | CAP.,FXD,CER DI:51PF,1%,100V | 72982 | 8035D2AADC1G510G |
| A1C1832 | 290-0517-00 | | | CAP.,FXD,ELCTLT:6.8UF,20%,35V | 56289 | 196D685X0035KA1 |
| A1C1837 | 281-0815-00 | | | CAP.,FXD,CER DI:0.027UF,20%,50V | 72982 | 8005D9AABW5R273M |
| A1C1846 | 281-0812-00 | | | CAP.,FXD,CER DI:1000PF,10%,100V | 72982 | 8035D9AADX7R102K |
| A1C1848 | 281-0759-00 | | | CAP.,FXD,CER DI:22PF,10%,100V | 72982 | 8035D9AADC1G220K |
| A1C1854 | 281-0809-00 | | | CAP.,FXD,CER DI:200PF,5%,100V | 72982 | 8013T2ADDC1G201J |
| A1C1885 | 281-0815-00 | | | CAP.,FXD,CER DI:0.027UF,20%,50V | 72982 | 8005D9AABW5R273M |
| A1C1886 | 281-0815-00 | | | CAP.,FXD,CER DI:0.027UF,20%,50V | 72982 | 8005D9AABW5R273M |
| A1C1894 | 290-0517-00 | | | CAP.,FXD,ELCTLT:6.8UF,20%,35V | 56289 | 196D685X0035KA1 |
| A1C1896 | 281-0547-00 | | | CAP.,FXD,CER DI:2.7PF,10%,500V | 72982 | 301-000C0J0279C |
| A1C1911 | 281-0773-00 | | | CAP.,FXD,CER DI:0.01UF,10%,100V | 72982 | 8005H9AADW5R103K |
| A1C1912 | 290-0517-00 | | | CAP.,FXD,ELCTLT:6.8UF,20%,35V | 56289 | 196D685X0035KA1 |
| A1C1943 | 281-0823-00 | | | CAP.,FXD,CER DI:470PF,10%,50V | 51642 | G1710050NP0471K |
| A1CR1013 | 152-0141-02 | | | SEMICOND DEVICE:SILICON,30V,50NA | 80009 | 152-0141-02 |
| A1CR1014 | 152-0141-02 | | | SEMICOND DEVICE:SILICON,30V,50NA | 80009 | 152-0141-02 |
| A1CR1015 | 152-0141-02 | | | SEMICOND DEVICE:SILICON,30V,50NA | 80009 | 152-0141-02 |
| A1CR1023 | 152-0141-02 | | | SEMICOND DEVICE:SILICON,30V,50NA | 80009 | 152-0141-02 |
| A1CR1024 | 152-0141-02 | | | SEMICOND DEVICE:SILICON,30V,50NA | 80009 | 152-0141-02 |
| A1CR1034 | 152-0141-02 | | | SEMICOND DEVICE:SILICON,30V,50NA | 80009 | 152-0141-02 |
| A1CR1193 | 152-0153-00 | | | SEMICOND DEVICE:SILICON,15V,50MA | 80009 | 152-0153-00 |
| A1CR1263 | 152-0612-00 | | | SEMICOND DEVICE:V VAR CAP.,4V,17.5PF | 80009 | 152-0612-00 |
| A1CR1264 | 152-0612-00 | | | SEMICOND DEVICE:V VAR CAP.,4V,17.5PF | 80009 | 152-0612-00 |
| A1CR1298 | 152-0323-00 | | | SEMICOND DEVICE:SILICON,35V,0.1A | 80009 | 152-0323-00 |
| A1CR1312 | 152-0141-02 | | | SEMICOND DEVICE:SILICON,30V,50NA | 80009 | 152-0141-02 |
| A1CR1327 | 152-0141-02 | | | SEMICOND DEVICE:SILICON,30V,50NA | 80009 | 152-0141-02 |
| A1CR1432 | 152-0322-00 | | | SEMICOND DEVICE:SILICON,15V,HOT CARRIER | 80009 | 152-0322-00 |
| A1CR1434 | 152-0322-00 | | | SEMICOND DEVICE:SILICON,15V,HOT CARRIER | 80009 | 152-0322-00 |
| A1CR1436 | 152-0322-00 | | | SEMICOND DEVICE:SILICON,15V,HOT CARRIER | 80009 | 152-0322-00 |
| A1CR1438 | 152-0322-00 | | | SEMICOND DEVICE:SILICON,15V,HOT CARRIER | 80009 | 152-0322-00 |
| A1CR1441 | 152-0322-00 | | | SEMICOND DEVICE:SILICON,15V,HOT CARRIER | 80009 | 152-0322-00 |
| A1CR1443 | 152-0322-00 | | | SEMICOND DEVICE:SILICON,15V,HOT CARRIER | 80009 | 152-0322-00 |
| A1CR1445 | 152-0322-00 | | | SEMICOND DEVICE:SILICON,15V,HOT CARRIER | 80009 | 152-0322-00 |
| A1CR1447 | 152-0322-00 | | | SEMICOND DEVICE:SILICON,15V,HOT CARRIER | 80009 | 152-0322-00 |
| A1CR1529 | 152-0141-02 | | | SEMICOND DEVICE:SILICON,30V,50NA | 80009 | 152-0141-02 |
| A1CR1541 | 152-0322-00 | | | SEMICOND DEVICE:SILICON,15V,HOT CARRIER | 80009 | 152-0322-00 |
| A1CR1543 | 152-0322-00 | | | SEMICOND DEVICE:SILICON,15V,HOT CARRIER | 80009 | 152-0322-00 |
| A1CR1545 | 152-0322-00 | | | SEMICOND DEVICE:SILICON,15V,HOT CARRIER | 80009 | 152-0322-00 |
| A1CR1547 | 152-0322-00 | | | SEMICOND DEVICE:SILICON,15V,HOT CARRIER | 80009 | 152-0322-00 |

| Component No. | Tektronix Part No. | Serial/Model No. Eff | Dscont | Name & Description | Mfr Code | Mfr Part Number |
|---|---|---|---|---|---|---|
| A1CR1693 | 152-0153-00 | | | SEMICOND DEVICE:SILICON,15V,50MA | 80009 | 152-0153-00 |
| A1CR1727 | 152-0141-02 | | | SEMICOND DEVICE:SILICON,30V,50NA | 80009 | 152-0141-02 |
| A1CR1763 | 152-0612-00 | | | SEMICOND DEVICE:V VAR CAP.,4V,17.5PF | 80009 | 152-0612-00 |
| A1CR1764 | 152-0612-00 | | | SEMICOND DEVICE:V VAR CAP.,4V,17.5PF | 80009 | 152-0612-00 |
| A1CR1796 | 152-0323-00 | | | SEMICOND DEVICE:SILICON,35V,0.1A | 80009 | 152-0323-00 |
| A1CR1818 | 152-0141-02 | | | SEMICOND DEVICE:SILICON,30V,50NA | 80009 | 152-0141-02 |
| A1CR1918 | 152-0141-02 | | | SEMICOND DEVICE:SILICON,30V,50NA | 80009 | 152-0141-02 |
| A1CR1936 | 152-0141-02 | | | SEMICOND DEVICE:SILICON,30V,50NA | 80009 | 152-0141-02 |
| A1L1245 | 108-0433-00 | | | COIL,RF:0.09UH | 80009 | 108-0433-00 |
| A1L1412 | 108-0182-00 | | | COIL,RF:0.3UH | 80009 | 108-0182-00 |
| A1L1512 | 108-0182-00 | | | COIL,RF:0.3UH | 80009 | 108-0182-00 |
| A1L1642 | 108-0433-00 | | | COIL,RF:0.09UH | 80009 | 108-0433-00 |
| A1Q1004 | 151-0190-00 | | | TRANSISTOR:SILICON,NPN | 80009 | 151-0190-00 |
| A1Q1028 | 151-0221-00 | B010100 | B022259 | TRANSISTOR:SILICON,PNP | 80009 | 151-0221-00 |
| A1Q1028 | 151-0220-00 | B022260 | | TRANSISTOR:SILICON,PNP | 80009 | 151-0220-00 |
| A1Q1038 | 151-0271-00 | | | TRANSISTOR:SILICON,PNP | 80009 | 151-0271-00 |
| A1Q1045 | 151-0271-00 | | | TRANSISTOR:SILICON,PNP | 80009 | 151-0271-00 |
| A1Q1062 | 151-0190-00 | | | TRANSISTOR:SILICON,NPN | 80009 | 151-0190-00 |
| A1Q1118 | 151-0221-00 | | | TRANSISTOR:SILICON,PNP | 80009 | 151-0221-00 |
| A1Q1125 | 151-0221-00 | | | TRANSISTOR:SILICON,PNP | 80009 | 151-0221-00 |
| A1Q1145 | 151-0271-00 | | | TRANSISTOR:SILICON,PNP | 80009 | 151-0271-00 |
| A1Q1150 | 151-0221-00 | | | TRANSISTOR:SILICON,PNP | 80009 | 151-0221-00 |
| A1Q1155 | 151-0434-00 | | | TRANSISTOR:SILICON,PNP | 80009 | 151-0434-00 |
| A1Q1175 | 151-0198-00 | | | TRANSISTOR:SILICON,NPN,SEL FROM MPS918 | 80009 | 151-0198-00 |
| A1Q1215 | 151-0198-00 | | | TRANSISTOR:SILICON,NPN,SEL FROM MPS918 | 80009 | 151-0198-00 |
| A1Q1225 | 151-0221-00 | | | TRANSISTOR:SILICON,PNP | 80009 | 151-0221-00 |
| A1Q1235 | 151-0221-00 | | | TRANSISTOR:SILICON,PNP | 80009 | 151-0221-00 |
| A1Q1250 | 151-0221-00 | | | TRANSISTOR:SILICON,PNP | 80009 | 151-0221-00 |
| A1Q1297 | 151-1090-00 | | | TRANSISTOR:SILICON,DUAL,N CHANNEL,FET | 80009 | 151-1090-00 |
| A1Q1344 | 151-0221-00 | | | TRANSISTOR:SILICON,PNP | 80009 | 151-0221-00 |
| A1Q1346 | 151-0221-00 | | | TRANSISTOR:SILICON,PNP | 80009 | 151-0221-00 |
| A1Q1355 | 151-0434-00 | | | TRANSISTOR:SILICON,PNP | 80009 | 151-0434-00 |
| A1Q1375 | 151-0198-00 | | | TRANSISTOR:SILICON,NPN,SEL FROM MPS918 | 80009 | 151-0198-00 |
| A1Q1426 | 151-0472-00 | | | TRANSISTOR:SILICON,NPN | 80009 | 151-0472-00 |
| A1Q1428 | 151-0472-00 | | | TRANSISTOR:SILICON,NPN | 80009 | 151-0472-00 |
| A1Q1555 | 151-0190-00 | | | TRANSISTOR:SILICON,NPN | 80009 | 151-0190-00 |
| A1Q1617 | 151-0188-00 | | | TRANSISTOR:SILICON,PNP | 80009 | 151-0188-00 |
| A1Q1619 | 151-0188-00 | | | TRANSISTOR:SILICON,PNP | 80009 | 151-0188-00 |
| A1Q1636 | 151-0367-00 | | | TRANSISTOR:SILICON,NPN,SEL FROM 3571TP | 80009 | 151-0367-00 |
| A1Q1644 | 151-0221-00 | | | TRANSISTOR:SILICON,PNP | 80009 | 151-0221-00 |
| A1Q1646 | 151-0221-00 | | | TRANSISTOR:SILICON,PNP | 80009 | 151-0221-00 |
| A1Q1655 | 151-0434-00 | | | TRANSISTOR:SILICON,PNP | 80009 | 151-0434-00 |
| A1Q1675 | 151-0198-00 | | | TRANSISTOR:SILICON,NPN,SEL FROM MPS918 | 80009 | 151-0198-00 |
| A1Q1698 | 151-1090-00 | | | TRANSISTOR:SILICON,DUAL,N CHANNEL,FET | 80009 | 151-1090-00 |
| A1Q1719 | 151-0188-00 | | | TRANSISTOR:SILICON,PNP | 80009 | 151-[illegible] |
| A1Q1746 | 151-0221-00 | | | TRANSISTOR:SILICON,PNP | 80009 | 151-0221-00 |
| A1Q1812 | 151-0188-00 | | | TRANSISTOR:SILICON,PNP | 80009 | 151-0188-00 |
| A1Q1833 | 151-0221-00 | | | TRANSISTOR:SILICON,PNP | 80009 | 151-0221-00 |
| A1Q1845 | 151-0271-00 | | | TRANSISTOR:SILICON,PNP | 80009 | 151-0271-00 |
| A1Q1855 | 151-0434-00 | | | TRANSISTOR:SILICON,PNP | 80009 | 151-0434-00 |
| A1Q1875 | 151-0198-00 | | | TRANSISTOR:SILICON,NPN,SEL FROM MPS918 | 80009 | 151-0198-00 |
| A1Q1938 | 151-0271-00 | | | TRANSISTOR:SILICON,PNP | 80009 | 151-0271-00 |
| A1Q1948 | 151-0271-00 | | | TRANSISTOR:SILICON,PNP | 80009 | 151-0271-00 |
| A1Q1954 | 151-0221-00 | | | TRANSISTOR:SILICON,PNP | 80009 | 151-0221-00 |
| A1R1015 | 315-0472-00 | | | RES.,FXD,CMPSN:4.7K OHM,5%,0.25W | 01121 | CB4725 |

| Component No. | Tektronix Part No. | Serial/Model No. Eff | Dscont | Name & Description | Mfr Code | Mfr Part Number |
|---|---|---|---|---|---|---|
| A1R1016 | 321-0064-00 | | | RES.,FXD,FILM:45.3 OHM,1%,0.125W | 91637 | MFF1816G45R30F |
| A1R1032 | 321-0201-00 | B010100 | B022259 | RES.,FXD,FILM:1.21K OHM,1%,0.125W | 91637 | MFF1816G12100F |
| A1R1032 | 321-0204-00 | B022260 | | RES.,FXD,FILM:1.3K OHM,1%,0.125W | 91637 | MFF1816G13000F |
| A1R1033 | 315-0331-00 | | | RES.,FXD,CMPSN:330 OHM,5%,0.25W | 01121 | CB3315 |
| A1R1035 | 315-0470-00 | | | RES.,FXD,CMPSN:47 OHM,5%,0.25W | 01121 | CB4705 |
| A1R1042 | 315-0431-00 | | | RES.,FXD,CMPSN:430 OHM,5%,0.25W | 01121 | CB4315 |
| A1R1052 | 315-0101-00 | | | RES.,FXD,CMPSN:100 OHM,5%,0.25W | 01121 | CB1015 |
| A1R1055 | 311-1311-00 | | | RES.,VAR,NONWIR:1K OHM,20%,1W | 01121 | 73M4G048L102M |
| A1R1064 | 321-0190-00 | | | RES.,FXD,FILM:931 OHM,1%,0.125W | 91637 | MFF1816G931R0F |
| A1R1072 | 315-0112-00 | | | RES.,FXD,CMPSN:1.1K OHM,5%,0.25W | 01121 | CB1125 |
| A1R1081 | 321-0229-00 | | | RES.,FXD,FILM:2.37K OHM,1%,0.125W | 91637 | MFF1816G23700F |
| A1R1082 | 321-0229-00 | | | RES.,FXD,FILM:2.37K OHM,1%,0.125W | 91637 | MFF1816G23700F |
| A1R1087 | 315-0470-00 | | | RES.,FXD,CMPSN:47 OHM,5%,0.25W | 01121 | CB4705 |
| A1R1095 | 321-0030-00 | | | RES.,FXD,FILM:20 OHM,1%,0.125W | 91637 | MFF1816G20R00F |
| A1R1106 | 321-0064-00 | | | RES.,FXD,FILM:45.3 OHM,1%,0.125W | 91637 | MFF1816G45R30F |
| A1R1107 | 321-0068-00 | | | RES.,FXD,FILM:49.9 OHM,1%,0.125W | 91637 | MFF1816G49R90F |
| A1R1108 | 321-0126-00 | | | RES.,FXD,FILM:200 OHM,1%,0.125W | 91637 | MFF1816G200R0F |
| A1R1116 | 315-0751-00 | | | RES.,FXD,CMPSN:750 OHM,5%,0.25W | 01121 | CB7515 |
| A1R1117 | 315-0331-00 | | | RES.,FXD,CMPSN:330 OHM,5%,0.25W | 01121 | CB3315 |
| A1R1126 | 311-1564-00 | | | RES.,VAR,NONWIR:500 OHM,20%,0.50W | 73138 | 91A R500 |
| A1R1135 | 311-1558-00 | | | RES.,VAR,NONWIR:20K OHM,20%,0.50W | 73138 | 91-80-0 |
| A1R1136 | 315-0331-00 | | | RES.,FXD,CMPSN:330 OHM,5%,0.25W | 01121 | CB3315 |
| A1R1143 | 321-0195-00 | B010100 | B010239 | RES.,FXD,FILM:1.05K OHM,1%,0.125W | 91637 | MFF1816G10500F |
| A1R1143 | 321-0192-00 | B010240 | | RES.,FXD,FILM:976 OHM,1%,0.125W | 91637 | MFF1816G976R0F |
| A1R1144 | 321-0087-00 | B010100 | B010239 | RES.,FXD,FILM:78.7 OHM,1%,0.125W | 91637 | MFF1816G78R70F |
| A1R1144 | 321-0126-00 | B010240 | | RES.,FXD,FILM:200 OHM,1%,0.125W | 91637 | MFF1816G200R0F |
| A1R1147 | 315-0390-00 | | | RES.,FXD,CMPSN:39 OHM,5%,0.25W | 01121 | CB3905 |
| A1R1148 | 315-0222-00 | | | RES.,FXD,CMPSN:2.2K OHM,5%,0.25W | 01121 | CB2225 |
| A1R1152 | 315-0241-00 | | | RES.,FXD,CMPSN:240 OHM,5%,0.25W | 01121 | CB2415 |
| A1R1159 | 321-0126-00 | | | RES.,FXD,FILM:200 OHM,1%,0.125W | 91637 | MFF1816G200R0F |
| A1R1168 | 315-0183-00 | | | RES.,FXD,CMPSN:18K OHM,5%,0.25W | 01121 | CB1835 |
| A1R1173 | 315-0241-00 | | | RES.,FXD,CMPSN:240 OHM,5%,0.25W | 01121 | CB2415 |
| A1R1176 | 311-1560-00 | | | RES.,VAR,NONWIR:5K OHM,5%,0.50W | 73138 | 91A R5K |
| A1R1185 | 311-1560-00 | | | RES.,VAR,NONWIR:5K OHM,5%,0.50W | 73138 | 91A R5K |
| A1R1186 | 315-0470-00 | | | RES.,FXD,CMPSN:47 OHM,5%,0.25W | 01121 | CB4705 |
| A1R1188 | 315-0470-00 | | | RES.,FXD,CMPSN:47 OHM,5%,0.25W | 01121 | CB4705 |
| A1R1190 | 311-1567-00 | | | RES.,VAR,NONWIR:TRMR,100 OHM,0.50W | 73138 | 91-89-0 |
| A1R1202 | 311-1564-00 | | | RES.,VAR,NONWIR:500 OHM,20%,0.50W | 73138 | 91A R500 |
| A1R1205 | 321-0206-00 | | | RES.,FXD,FILM:1.37K OHM,1%,0.125W | 91637 | MFF1816G13700F |
| A1R1206 | 321-0177-00 | | | RES.,FXD,FILM:681 OHM,1%,0.125W | 91637 | MFF1816G681R0F |
| A1R1207 | 315-0271-00 | | | RES.,FXD,CMPSN:270 OHM,5%,0.25W | 01121 | CB2715 |
| A1R1208 | 323-0156-00 | | | RES.,FXD,FILM:412 OHM,1%,0.50W | 75042 | CECT0-4120F |
| A1R1216 | 315-0511-00 | | | RES.,FXD,CMPSN:510 OHM,5%,0.25W | 01121 | CB5115 |
| A1R1232 | 315-0430-00 | | | RES.,FXD,CMPSN:43 OHM,5%,0.25W | 01121 | CB4305 |
| A1R1233 | 315-0512-00 | | | RES.,FXD,CMPSN:5.1K OHM,5%,0.25W | 01121 | CB5125 |
| A1R1234 | 321-0149-00 | B010100 | B010239 | RES.,FXD,FILM:348 OHM,1%,0.125W | 91637 | MFF1816G348R0F |
| A1R1234 | 321-0196-00 | B010240 | | RES.,FXD,FILM:1.07K OHM,1%,0.125W | 91637 | MFF1816G10700F |
| A1R1242 | 321-0195-00 | B010100 | B010239 | RES.,FXD,FILM:1.05K OHM,1%,0.125W | 91637 | MFF1816G10500F |
| A1R1242 | 321-0192-00 | B010240 | | RES.,FXD,FILM:976 OHM,1%,0.125W | 91637 | MFF1816G976R0F |
| A1R1243 | 315-0392-00 | | | RES.,FXD,CMPSN:3.9K OHM,5%,0.25W | 01121 | CB3925 |
| A1R1244 | 315-0392-00 | | | RES.,FXD,CMPSN:3.9K OHM,5%,0.25W | 01121 | CB3925 |
| A1R1246 | 315-0390-00 | | | RES.,FXD,CMPSN:39 OHM,5%,0.25W | 01121 | CB3905 |
| A1R1247 | 315-0222-00 | | | RES.,FXD,CMPSN:2.2K OHM,5%,0.25W | 01121 | CB2225 |
| A1R1252 | 321-0170-00 | | | RES.,FXD,FILM:576 OHM,1%,0.125W | 91637 | MFF1816G576R0F |
| A1R1253 | 321-0170-00 | | | RES.,FXD,FILM:576 OHM,1%,0.125W | 91637 | MFF1816G576R0F |

| Component No. | Tektronix Part No. | Serial/Model No. Eff | Dscont | Name & Description | Mfr Code | Mfr Part Number |
|---|---|---|---|---|---|---|
| A1R1254 | 321-0089-00 | | | RES.,FXD,FILM:82.5 OHM,1%,0.125W | 91637 | MFF1816G82R50F |
| A1R1256 | 315-0100-00 | | | RES.,FXD,CMPSN:10 OHM,5%,0.25W | 01121 | CB1005 |
| A1R1258 | 315-0100-00 | | | RES.,FXD,CMPSN:10 OHM,5%,0.25W | 01121 | CB1005 |
| A1R1274 | 315-0301-00 | | | RES.,FXD,CMPSN:300 OHM,5%,0.25W | 01121 | CB3015 |
| A1R1275 | 321-0181-00 | | | RES.,FXD,FILM:750 OHM,1%,0.125W | 91637 | MFF1816G750R0F |
| A1R1276 | 321-0181-00 | | | RES.,FXD,FILM:750 OHM,1%,0.125W | 91637 | MFF1816G750R0F |
| A1R1278 | 315-0270-00 | | | RES.,FXD,CMPSN:27 OHM,5%,0.25W | 01121 | CB2705 |
| A1R1285 | 311-1403-00 | | | RES.,VAR,NONWIR:5K OHM,20%,0.50W | 01121 | 10M922 |
| A1R1296 | 321-0030-00 | | | RES.,FXD,FILM:20 OHM,1%,0.125W | 91637 | MFF1816G20R00F |
| A1R1299 | 315-0621-00 | | | RES.,FXD,CMPSN:620 OHM,5%,0.25W | 01121 | CB6215 |
| A1R1311 | 321-0049-00 | | | RES.,FXD,FILM:31.6 OHM,1%,0.125W | 91637 | MFF1816G31R60F |
| A1R1314 | 321-0065-00 | | | RES.,FXD,FILM:46.4 OHM,1%,0.125W | 91637 | MFF1816G46R40F |
| A1R1326 | 315-0430-00 | | | RES.,FXD,CMPSN:43 OHM,5%,0.25W | 01121 | CB4305 |
| A1R1328 | 321-0126-00 | | | RES.,FXD,FILM:200 OHM,1%,0.125W | 91637 | MFF1816G200R0F |
| A1R1333 | 315-0821-00 | | | RES.,FXD,CMPSN:820 OHM,5%,0.25W | 01121 | CB8215 |
| A1R1334 | 315-0821-00 | | | RES.,FXD,CMPSN:820 OHM,5%,0.25W | 01121 | CB8215 |
| A1R1335 | 311-1563-00 | | | RES.,VAR,NONWIR:1K OHM,20%,0.50W | 73138 | 91A R1K |
| A1R1353 | 315-0241-00 | | | RES.,FXD,CMPSN:240 OHM,5%,0.25W | 01121 | CB2415 |
| 1R1358 | 321-0126-00 | | | RES.,FXD,FILM:200 OHM,1%,0.125W | 91637 | MFF1816G200R0F |
| A1R1376 | 315-0301-00 | | | RES.,FXD,CMPSN:300 OHM,5%,0.25W | 01121 | CB3015 |
| A1R1382 | 315-0470-00 | | | RES.,FXD,CMPSN:47 OHM,5%,0.25W | 01121 | CB4705 |
| A1R1384 | 315-0101-00 | | | RES.,FXD,CMPSN:100 OHM,5%,0.25W | 01121 | CB1015 |
| A1R1385 | 315-0101-00 | | | RES.,FXD,CMPSN:100 OHM,5%,0.25W | 01121 | CB1015 |
| A1R1391 | 315-0151-00 | | | RES.,FXD,CMPSN:150 OHM,5%,0.25W | 01121 | CB1515 |
| A1R1392 | 315-0103-00 | | | RES.,FXD,CMPSN:10K OHM,5%,0.25W | 01121 | CB1035 |
| A1R1422 | 315-0750-00 | | | RES.,FXD,CMPSN:75 OHM,5%,0.25W | 01121 | CB7505 |
| A1R1438 | 315-0302-00 | | | RES.,FXD,CMPSN:3K OHM,5%,0.25W | 01121 | CB3025 |
| A1R1439 | 315-0302-00 | | | RES.,FXD,CMPSN:3K OHM,5%,0.25W | 01121 | CB3025 |
| A1R1448 | 315-0511-00 | | | RES.,FXD,CMPSN:510 OHM,5%,0.25W | 01121 | CB5115 |
| A1R1449 | 315-0751-00 | | | RES.,FXD,CMPSN:750 OHM,5%,0.25W | 01121 | CB7515 |
| A1R1482 | 311-1561-00 | | | RES.,VAR,NONWIR:2.5K OHM,20%,0.50W | 73138 | 91A R2500 |
| A1R1484 | 311-1559-00 | | | RES.,VAR,NONWIR:10K OHM,20%,0.50W | 73138 | 91A-10001M |
| A1R1486 | 321-0307-00 | | | RES.,FXD,FILM:15.4K OHM,1%,0.125W | 91637 | MFF1816G15401F |
| A1R1487 | 321-0239-00 | | | RES.,FXD,FILM:3.01K OHM,1%,0.125W | 91637 | MFF1816G30100F |
| A1R1488 | 321-0277-00 | | | RES.,FXD,FILM:7.5K OHM,1%,0.125W | 91637 | MFF1816G75000F |
| A1R1504 | 315-0331-00 | | | RES.,FXD,CMPSN:330 OHM,5%,0.25W | 01121 | CB3315 |
| A1R1514 | 321-0065-00 | | | RES.,FXD,FILM:46.4 OHM,1%,0.125W | 91637 | MFF1816G46R40F |
| A1R1516 | 323-0161-00 | | | RES.,FXD,FILM:464 OHM,1%,0.50W | 75042 | CECT0-4640F |
| A1R1521 | 315-0750-00 | | | RES.,FXD,CMPSN:75 OHM,5%,0.25W | 01121 | CB7505 |
| A1R1522 | 321-0126-00 | | | RES.,FXD,FILM:200 OHM,1%,0.125W | 91637 | MFF1816G200R0F |
| A1R1532 | 321-0186-00 | | | RES.,FXD,FILM:845 OHM,1%,0.125W | 91637 | MFF1816G845R0F |
| A1R1534 | 321-0186-00 | | | RES.,FXD,FILM:845 OHM,1%,0.125W | 91637 | MFF1816G845R0F |
| A1R1536 | 321-0133-00 | | | RES.,FXD,FILM:237 OHM,1%,0.125W | 91637 | MFF1816G237R0F |
| A1R1538 | 321-0133-00 | | | RES.,FXD,FILM:237 OHM,1%,0.125W | 91637 | MFF1816G237R0F |
| A1R1548 | 315-0751-00 | | | RES.,FXD,CMPSN:750 OHM,5%,0.25W | 01121 | CB7515 |
| A1R1549 | 315-0511-00 | | | RES.,FXD,CMPSN:510 OHM,5%,0.25W | 01121 | CB5115 |
| A1R1558 | 311-1311-00 | | | RES.,VAR,NONWIR:1K OHM,20%,1W | 01121 | 73M4G048L102M |
| A1R1562 | 321-0190-00 | | | RES.,FXD,FILM:931 OHM,1%,0.125W | 91637 | MFF1816G931R0F |
| A1R1579 | 321-0229-00 | | | RES.,FXD,FILM:2.37K OHM,1%,0.125W | 91637 | MFF1816G23700F |
| A1R1580 | 311-1560-00 | | | RES.,VAR,NONWIR:5K OHM,5%,0.50W | 73138 | 91A R5K |
| A1R1582 | 311-1560-00 | | | RES.,VAR,NONWIR:5K OHM,5%,0.50W | 73138 | 91A R5K |
| A1R1586 | 315-0241-00 | | | RES.,FXD,CMPSN:240 OHM,5%,0.25W | 01121 | CB2415 |
| A1R1587 | 315-0112-00 | | | RES.,FXD,CMPSN:1.1K OHM,5%,0.25W | 01121 | CB1125 |
| A1R1589 | 315-0470-00 | | | RES.,FXD,CMPSN:47 OHM,5%,0.25W | 01121 | CB4705 |
| A1R1590 | 321-0229-00 | | | RES.,FXD,FILM:2.37K OHM,1%,0.125W | 91637 | MFF1816G23700F |

| Component No. | Tektronix Part No. | Serial/Model No. Eff | Dscont | Name & Description | Mfr Code | Mfr Part Number |
|---|---|---|---|---|---|---|
| A1R1612 | 315-0752-00 | | | RES.,FXD,CMPSN:7.5K OHM,5%,0.25W | 01121 | CB7525 |
| A1R1613 | 315-0103-00 | | | RES.,FXD,CMPSN:10K OHM,5%,0.25W | 01121 | CB1035 |
| A1R1616 | 315-0752-00 | | | RES.,FXD,CMPSN:7.5K OHM,5%,0.25W | 01121 | CB7525 |
| A1R1622 | 321-0151-00 | | | RES.,FXD,FILM:365 OHM,1%,0.125W | 91637 | MFF1816G365R0F |
| A1R1624 | 321-0145-00 | | | RES.,FXD,FILM:316 OHM,1%,0.125W | 91637 | MFF1816G316R0F |
| A1R1625 | 321-0151-00 | | | RES.,FXD,FILM:365 OHM,1%,0.125W | 91637 | MFF1816G365R0F |
| A1R1626 | 321-0145-00 | | | RES.,FXD,FILM:316 OHM,1%,0.125W | 91637 | MFF1816G316R0F |
| A1R1632 | 323-0106-00 | | | RES.,FXD,FILM:124 OHM,1%,0.50W | 91637 | MFF1226G124R0F |
| A1R1634 | 311-1563-00 | | | RES.,VAR,NONWIR:1K OHM,20%,0.50W | 73138 | 91A R1K |
| A1R1645 | 315-0392-00 | | | RES.,FXD,CMPSN:3.9K OHM,5%,0.25W | 01121 | CB3925 |
| A1R1647 | 315-0241-00 | | | RES.,FXD,CMPSN:240 OHM,5%,0.25W | 01121 | CB2415 |
| A1R1661 | 321-0126-00 | | | RES.,FXD,FILM:200 OHM,1%,0.125W | 91637 | MFF1816G200R0F |
| A1R1683 | 315-0470-00 | | | RES.,FXD,CMPSN:47 OHM,5%,0.25W | 01121 | CB4705 |
| A1R1684 | 315-0470-00 | | | RES.,FXD,CMPSN:47 OHM,5%,0.25W | 01121 | CB4705 |
| A1R1685 | 311-1567-00 | | | RES.,VAR,NONWIR:TRMR,100 OHM,0.50W | 73138 | 91-89-0 |
| A1R1687 | 315-0270-00 | | | RES.,FXD,CMPSN:27 OHM,5%,0.25W | 01121 | CB2705 |
| A1R1695 | 321-0030-00 | | | RES.,FXD,FILM:20 OHM,1%,0.125W | 91637 | MFF1816G20R00F |
| A1R1712 | 315-0103-00 | | | RES.,FXD,CMPSN:10K OHM,5%,0.25W | 01121 | CB1035 |
| A1R1714 | 315-0752-00 | | | RES.,FXD,CMPSN:7.5K OHM,5%,0.25W | 01121 | CB7525 |
| A1R1716 | 315-0103-00 | | | RES.,FXD,CMPSN:10K OHM,5%,0.25W | 01121 | CB1035 |
| A1R1724 | 321-0145-00 | | | RES.,FXD,FILM:316 OHM,1%,0.125W | 91637 | MFF1816G316R0F |
| A1R1725 | 321-0151-00 | | | RES.,FXD,FILM:365 OHM,1%,0.125W | 91637 | MFF1816G365R0F |
| A1R1735 | 311-1558-00 | | | RES.,VAR,NONWIR:20K OHM,20%,0.50W | 73138 | 91-80-0 |
| A1R1742 | 315-0392-00 | | | RES.,FXD,CMPSN:3.9K OHM,5%,0.25W | 01121 | CB3925 |
| A1R1744 | 315-0390-00 | | | RES.,FXD,CMPSN:39 OHM,5%,0.25W | 01121 | CB3905 |
| A1R1752 | 321-0170-00 | | | RES.,FXD,FILM:576 OHM,1%,0.125W | 91637 | MFF1816G576R0F |
| A1R1753 | 321-0170-00 | | | RES.,FXD,FILM:576 OHM,1%,0.125W | 91637 | MFF1816G576R0F |
| A1R1754 | 321-0089-00 | | | RES.,FXD,FILM:82.5 OHM,1%,0.125W | 91637 | MFF1816G82R50F |
| A1R1756 | 315-0100-00 | | | RES.,FXD,CMPSN:10 OHM,5%,0.25W | 01121 | CB1005 |
| A1R1758 | 315-0100-00 | | | RES.,FXD,CMPSN:10 OHM,5%,0.25W | 01121 | CB1005 |
| A1R1774 | 315-0301-00 | | | RES.,FXD,CMPSN:300 OHM,5%,0.25W | 01121 | CB3015 |
| A1R1775 | 321-0181-00 | | | RES.,FXD,FILM:750 OHM,1%,0.125W | 91637 | MFF1816G750R0F |
| A1R1776 | 321-0181-00 | | | RES.,FXD,FILM:750 OHM,1%,0.125W | 91637 | MFF1816G750R0F |
| A1R1782 | 311-1403-00 | | | RES.,VAR,NONWIR:5K OHM,20%,0.50W | 01121 | 10M922 |
| A1R1794 | 321-0030-00 | | | RES.,FXD,FILM:20 OHM,1%,0.125W | 91637 | MFF1816G20R00F |
| A1R1798 | 315-0621-00 | | | RES.,FXD,CMPSN:620 OHM,5%,0.25W | 01121 | CB6215 |
| A1R1815 | 315-0102-00 | | | RES.,FXD,CMPSN:1K OHM,5%,0.25W | 01121 | CB1025 |
| A1R1816 | 315-0302-00 | | | RES.,FXD,CMPSN:3K OHM,5%,0.25W | 01121 | CB3025 |
| A1R1817 | 315-0302-00 | | | RES.,FXD,CMPSN:3K OHM,5%,0.25W | 01121 | CB3025 |
| A1R1818 | 315-0103-00 | XB010965 | | RES.,FXD,CMPSN:10K OHM,5%,0.25W | 01121 | CB1035 |
| A1R1825 | 315-0102-00 | | | RES.,FXD,CMPSN:1K OHM,5%,0.25W | 01121 | CB1025 |
| A1R1828 | 321-0064-00 | | | RES.,FXD,FILM:45.3 OHM,1%,0.125W | 91637 | MFF1816G45R30F |
| A1R1834 | 321-0201-00 | B010100 | B022259 | RES.,FXD,FILM:1.21K OHM,1%,0.125W | 91637 | MFF1816G12100F |
| A1R1834 | 321-0204-00 | B022260 | | RES.,FXD,FILM:1.3K OHM,1%,0.125W | 91637 | MFF1816G13000F |
| A1R1835 | 311-1564-00 | | | RES.,VAR,NONWIR:500 OHM,20%,0.50W | 73138 | 91A R500 |
| A1R1838 | 315-0470-00 | | | RES.,FXD,CMPSN:47 OHM,5%,0.25W | 01121 | CB4705 |
| A1R1839 | 315-0431-00 | | | RES.,FXD,CMPSN:430 OHM,5%,0.25W | 01121 | CB4315 |
| A1R1842 | 321-0195-00 | B010100 | B010239 | RES.,FXD,FILM:1.05K OHM,1%,0.125W | 91637 | MFF1816G10500F |
| A1R1842 | 321-0192-00 | B010240 | | RES.,FXD,FILM:976 OHM,1%,0.125W | 91637 | MFF1816G976R0F |
| A1R1843 | 321-0195-00 | B010100 | B010239 | RES.,FXD,FILM:1.05K OHM,1%,0.125W | 91637 | MFF1816G10500F |
| A1R1843 | 321-0192-00 | B010240 | | RES.,FXD,FILM:976 OHM,1%,0.125W | 91637 | MFF1816G976R0F |
| A1R1849 | 315-0222-00 | | | RES.,FXD,CMPSN:2.2K OHM,5%,0.25W | 01121 | CB2225 |
| A1R1854 | 315-0241-00 | | | RES.,FXD,CMPSN:240 OHM,5%,0.25W | 01121 | CB2415 |
| A1R1858 | 321-0126-00 | | | RES.,FXD,FILM:200 OHM,1%,0.125W | 91637 | MFF1816G200R0F |
| A1R1868 | 315-0183-00 | | | RES.,FXD,CMPSN:18K OHM,5%,0.25W | 01121 | CB1835 |

| Component No. | Tektronix Part No. | Serial/Model No. Eff | Dscont | Name & Description | Mfr Code | Mfr Part Number |
|---|---|---|---|---|---|---|
| A1R1876 | 315-0301-00 | | | RES.,FXD,CMPSN:300 OHM,5%,0.25W | 01121 | CB3015 |
| A1R1881 | 315-0470-00 | | | RES.,FXD,CMPSN:47 OHM,5%,0.25W | 01121 | CB4705 |
| A1R1882 | 311-1561-00 | | | RES.,VAR,NONWIR:2.5K OHM,20%,0.50W | 73138 | 91A R2500 |
| A1R1884 | 311-1559-00 | | | RES.,VAR,NONWIR:10K OHM,20%,0.50W | 73138 | 91A-10001M |
| A1R1885 | 315-0101-00 | | | RES.,FXD,CMPSN:100 OHM,5%,0.25W | 01121 | CB1015 |
| A1R1886 | 315-0101-00 | | | RES.,FXD,CMPSN:100 OHM,5%,0.25W | 01121 | CB1015 |
| A1R1889 | 315-0103-00 | | | RES.,FXD,CMPSN:10K OHM,5%,0.25W | 01121 | CB1035 |
| A1R1891 | 315-0151-00 | | | RES.,FXD,CMPSN:150 OHM,5%,0.25W | 01121 | CB1515 |
| A1R1893 | 315-0103-00 | | | RES.,FXD,CMPSN:10K OHM,5%,0.25W | 01121 | CB1035 |
| A1R1903 | 315-0112-00 | | | RES.,FXD,CMPSN:1.1K OHM,5%,0.25W | 01121 | CB1125 |
| A1R1904 | 315-0221-00 | | | RES.,FXD,CMPSN:220 OHM,5%,0.25W | 01121 | CB2215 |
| A1R1906 | 315-0203-00 | | | RES.,FXD,CMPSN:20K OHM,5%,0.25W | 01121 | CB2035 |
| A1R1914 | 315-0122-00 | | | RES.,FXD,CMPSN:1.2K OHM,5%,0.25W | 01121 | CB1225 |
| A1R1916 | 315-0471-00 | | | RES.,FXD,CMPSN:470 OHM,5%,0.25W | 01121 | CB4715 |
| A1R1922 | 315-0102-00 | | | RES.,FXD,CMPSN:1K OHM,5%,0.25W | 01121 | CB1025 |
| A1R1924 | 315-0122-00 | | | RES.,FXD,CMPSN:1.2K OHM,5%,0.25W | 01121 | CB1225 |
| A1R1932 | 315-0751-00 | | | RES.,FXD,CMPSN:750 OHM,5%,0.25W | 01121 | CB7515 |
| A1R1934 | 321-0149-00 | B010100 | B010239 | RES.,FXD,FILM:348 OHM,1%,0.125W | 91637 | MFF1816G348R0F |
| A1R1934 | 321-0196-00 | B010240 | | RES.,FXD,FILM:1.07K OHM,1%,0.125W | 91637 | MFF1816G10700F |
| A1R1944 | 315-0331-00 | | | RES.,FXD,CMPSN:330 OHM,5%,0.25W | 01121 | CB3315 |
| A1R1946 | 321-0087-00 | B010100 | B010239 | RES.,FXD,FILM:78.7 OHM,1%,0.125W | 91637 | MFF1816G78R70F |
| A1R1946 | 321-0126-00 | B010240 | | RES.,FXD,FILM:200 OHM,1%,0.125W | 91637 | MFF1816G200R0F |
| A1R1952 | 315-0101-00 | | | RES.,FXD,CMPSN:100 OHM,5%,0.25W | 01121 | CB1015 |
| A1R1956 | 315-0390-00 | | | RES.,FXD,CMPSN:39 OHM,5%,0.25W | 01121 | CB3905 |
| A1R1958 | 315-0222-00 | | | RES.,FXD,CMPSN:2.2K OHM,5%,0.25W | 01121 | CB2225 |
| A1R1975 | 311-1559-00 | | | RES.,VAR,NONWIR:10K OHM,20%,0.50W | 73138 | 91A-10001M |
| A1R1981 | 321-0307-00 | | | RES.,FXD,FILM:15.4K OHM,1%,0.125W | 91637 | MFF1816G15401F |
| A1R1983 | 321-0307-00 | | | RES.,FXD,FILM:15.4K OHM,1%,0.125W | 91637 | MFF1816G15401F |
| A1R1986 | 321-0277-00 | | | RES.,FXD,FILM:7.5K OHM,1%,0.125W | 91637 | MFF1816G75000F |
| A1R1987 | 321-0277-00 | | | RES.,FXD,FILM:7.5K OHM,1%,0.125W | 91637 | MFF1816G75000F |
| A1R1988 | 321-0253-00 | B010100 | B010964 | RES.,FXD,FILM:4.22K OHM,1%,0.125W | 91637 | MFF1816G42200F |
| A1R1988 | 321-0260-00 | B010965 | | RES.,FXD,FILM:4.99K OHM,1%,0.125W | 91637 | MFF1816G49900F |
| A1R1989 | 321-0253-00 | B010100 | B010964 | RES.,FXD,FILM:4.22K OHM,1%,0.125W | 91637 | MFF1816G42200F |
| A1R1989 | 321-0260-00 | B010965 | | RES.,FXD,FILM:4.99K OHM,1%,0.125W | 91637 | MFF1816G49900F |
| A1RT1267 | 307-0181-00 | | | RES.,THERMAL:100K OHM,10%,4MW/DEG C | 15454 | 1DE104-K-220EC |
| A1RT1767 | 307-0181-00 | | | RES.,THERMAL:100K OHM,10%,4MW/DEG C | 15454 | 1DE104-K-220EC |
| A1S1414 | 260-1486-00 | | | SWITCH,PUSH: | 80009 | 260-1486-00 |
| A1S1995 | 260-1208-00 | | | SWITCH,PUSH:DPDT | 80009 | 260-1208-00 |
| A1U1290 | 155-0078-10 | | | MICROCIRCUIT,LI:ML,VERTICAL AMPLIFIER | 80009 | 155-0078-10 |
| A1U1605 | 160-0204-00 | B010100 | B010959 | MICROCIRCUIT,DI:256 X 4 ROM,CUSTOM MASK | 80009 | 160-0204-00 |
| A1U1605 | 160-0204-01 | B010960 | | MICROCIRCUIT,DI:256 X 4 ROM,CUSTOM MASK | 80009 | 160-0204-01 |
| A1U1705 | 156-0392-00 | | | MICROCIRCUIT,DI:QUAD LATCH | 80009 | 156-0392-00 |
| A1U1790 | 155-0078-10 | | | MICROCIRCUIT,LI:ML,VERTICAL AMPLIFIER | 80009 | 155-0078-10 |
| A1U1805 | 156-0480-00 | | | MICROCIRCUIT,DI:QUAD 2-INPUT AND GATE | 80009 | 156-0480-00 |
| A1U1905 | 156-0382-00 | | | MICROCIRCUIT,DI:QUAD 2-INPUT NAND GATE | 80009 | 156-0382-00 |
| A1VR1096 | 152-0166-00 | | | SEMICOND DEVICE:ZENER,0.4W,6.2V,5% | 80009 | 152-0166-00 |
| A1VR1356 | 152-0166-00 | | | SEMICOND DEVICE:ZENER,0.4W,6.2V,5% | 80009 | 152-0166-00 |
| A1VR1597 | 152-0166-00 | | | SEMICOND DEVICE:ZENER,0.4W,6.2V,5% | 80009 | 152-0166-00 |
| A1VR1662 | 152-0166-00 | | | SEMICOND DEVICE:ZENER,0.4W,6.2V,5% | 80009 | 152-0166-00 |
| A1VR1824 | 152-0306-00 | | | SEMICOND DEVICE:ZENER,0.4W,9.1V,5% | 80009 | 152-0306-00 |
| A1W1527 | 131-0566-00 | | | LINK,TERM.CONNE:0.086 DIA X 2.375 INCH L | 55210 | L-2007-1 |
| A1W1732 | 131-0566-00 | | | LINK,TERM.CONNE:0.086 DIA X 2.375 INCH L | 55210 | L-2007-1 |

| Component No. | Tektronix Part No. | Serial/Model No. Eff | Dscont | Name & Description | Mfr Code | Mfr Part Number |
|---|---|---|---|---|---|---|
| A2 | ----- ----- | | | CKT BOARD ASSY:VERTICAL OUTPUT | | |
| A2C2016 | 281-0775-00 | B010100 | B029999X | CAP.,FXD,CER DI:0.1UF,20%,50V | 72982 | 8005D9AABZ5U104M |
| A2C2047 | 281-0775-00 | XB030000 | | CAP.,FXD,CER DI:0.1UF,20%,50V | 72982 | 8005D9AABZ5U104M |
| A2C2112 | 281-0773-00 | B010100 | B029999X | CAP.,FXD,CER DI:0.01UF,10%,100V | 72982 | 8005H9AADW5R103K |
| A2C2126 | 281-0773-00 | XB030000 | | CAP.,FXD,CER DI:0.01UF,10%,100V | 72982 | 8005H9AADW5R103K |
| A2C2133 | 281-0771-00 | B010100 | B029999X | CAP.,FXD,CER DI:0.0022UF,20%,200V | 72982 | 314-022Z5U0222M |
| A2C2172 | 281-0775-00 | XB030000 | | CAP.,FXD,CER DI:0.1UF,20%,50V | 72982 | 8005D9AABZ5U104M |
| A2C2174 | 281-0775-00 | B010100 | B029999X | CAP.,FXD,CER DI:0.1UF,20%,50V | 72982 | 8005D9AABZ5U104M |
| A2C2196 | 281-0783-00 | XB030000 | | CAP.,FXD,CER DI:0.1UF,20%,100V | 72982 | 8045-D-Z5U104M |
| A2C2293 | 281-0783-00 | B010100 | B029999X | CAP.,FXD,CER DI:0.1UF,20%,100V | 72982 | 8045-D-Z5U104M |
| A2C2308 | 281-0089-00 | B010100 | B029999X | CAP.,VAR,CER DI:2-8PF,350V | 72982 | 538-006-A2-8 |
| A2C2315 | 281-0089-00 | XB030000 | | CAP.,VAR,CER DI:2-8PF,350V | 72982 | 538-006-A2-8 |
| A2C2334 | 281-0772-00 | XB030000 | | CAP.,FXD,CER DI:0.0047UF,10%,100V | 72982 | 8005H9AADW5R472K |
| A2C2335 | 281-0775-00 | XB030000 | | CAP.,FXD,CER DI:0.1UF,20%,50V | 72982 | 8005D9AABZ5U104M |
| A2C2336 | 281-0812-00 | XB030000 | | CAP.,FXD,CER DI:1000PF,10%,100V | 72982 | 8035D9AADX7R102K |
| A2C2337 | 281-0797-00 | XB030000 | | CAP.,FXD,CER DI:15PF,10%,100V | 72982 | 8035D9AADC0G150K |
| A2C2338 | 281-0797-00 | B010100 | B029999X | CAP.,FXD,CER DI:15PF,10%,100V | 72982 | 8035D9AADC0G150K |
| A2C2339 | 281-0773-00 | XB030000 | | CAP.,FXD,CER DI:0.01UF,10%,100V | 72982 | 8005H9AADW5R103K |
| A2C2346 | 281-0096-00 | XB030000 | | CAP.,VAR,AIR DI:5.5-18PF,350V | 72982 | 538-006-A5.5-18 |
| A2C2350 | 281-0096-00 | B010100 | B029999X | CAP.,VAR,AIR DI:5.5-18PF,350V | 72982 | 538-006-A5.5-18 |
| A2C2412 | 281-0775-00 | B010100 | B029999X | CAP.,FXD,CER DI:0.1UF,20%,50V | 72982 | 8005D9AABZ5U104M |
| A2C2415 | 281-0812-00 | B010100 | B029999X | CAP.,FXD,CER DI:1000PF,10%100V | 72982 | 8035D9AADX7R102K |
| A2C2417 | 281-0775-00 | XB030000 | | CAP.,FXD,CER DI:0.1UF,20%,50V | 72982 | 8005D9AABZ5U104M |
| A2C2421 | 281-0788-00 | B010100 | B029999X | CAP.,FXD,CER DI:470PF,10%,100V | 72982 | 8005H9AADW5R471K |
| A2C2422 | 281-0812-00 | XB030000 | | CAP.,FXD,CER DI:1000PF,10%,100V | 72982 | 8035D9AADX7R102K |
| A2C2424 | 281-0788-00 | XB030000 | | CAP.,FXD,CER DI:470PF,10%,100V | 72982 | 8005H9AADW5R471K |
| A2C2428 | 281-0773-00 | B010100 | B029999X | CAP.,FXD,CER DI:0.01UF,10%,100V | 72982 | 8005H9AADW5R103K |
| A2C2436 | 281-0812-00 | B010100 | B029999X | CAP.,FXD,CER DI:1000PF,10%,100V | 72982 | 8035D9AADX7R102K |
| A2C2438 | 281-0773-00 | B010100 | B029999X | CAP.,FXD,CER DI:0.01UF,10%,100V | 72982 | 8005H9AADW5R103K |
| A2C2439 | 281-0772-00 | B010100 | B029999X | CAP.,FXD,CER DI:0.0047UF,10%,100V | 72982 | 8005H9AADW5R472K |
| A2C2481 | 281-0775-00 | B010100 | B029999X | CAP.,FXD,CER DI:0.1UF,20%,50V | 72982 | 8005D9AABZ5U104M |
| A2C2483 | 281-0775-00 | B010100 | B029999X | CAP.,FXD,CER DI:0.1UF,20%,50V | 72982 | 8005D9AABZ5U104M |
| A2C2486 | 281-0773-00 | XB030000 | | CAP.,FXD,CER DI:0.01UF,10%,100V | 72982 | 8005H9AADW5R103K |
| A2C2488 | 281-0775-00 | XB030000 | | CAP.,FXD,CER DI:0.1UF,20%,50V | 72982 | 8005D9AABZ5U104M |
| A2L2264 | 108-0328-00 | XB030000 | | COIL,RF:0.3UH | 80009 | 108-0328-00 |
| A2L2267 | 108-0328-00 | XB030000 | | COIL,RF:0.3UH | 80009 | 108-0328-00 |
| A2L2296 | 108-0538-00 | XB030000 | | COIL,RF:2.7UH | 76493 | 70F276A1 |
| A2L2393 | 108-0538-00 | B010100 | B029999X | COIL,RF:2.7UH | 76493 | 70F276A1 |
| A2L2419 | 108-0760-00 | | | COIL,RF:67MH | 80009 | 108-0760-00 |
| A2L2485 | 108-0538-00 | B010100 | B029999X | COIL,RF:2.7UH | 76493 | 70F276A1 |
| A2L2487 | 108-0538-00 | B010100 | B029999X | COIL,RF:2.7UH | 76493 | 70F276A1 |
| A2L2492 | 108-0538-00 | XB030000 | | COIL,RF:2.7UH | 76493 | 70F276A1 |
| A2L2494 | 108-0538-00 | XB030000 | | COIL,RF:2.7UH | 76493 | 70F276A1 |
| A2LR2268 | 108-0328-00 | B010100 | B029999X | COIL,RF:0.3UH | 80009 | 108-0328-00 |
| A2LR2366 | 108-0328-00 | B010100 | B029999X | COIL,RF:0.3UH | 80009 | 108-0328-00 |
| A2Q2105 | 151-0190-00 | XB030000 | | TRANSISTOR:SILICON,NPN | 80009 | 151-0190-00 |
| A2Q2115 | 151-0190-00 | XB030000 | | TRANSISTOR:SILICON,NPN | 80009 | 151-0190-00 |
| A2Q2130 | 151-0190-00 | B010100 | B029999X | TRANSISTOR:SILICON,NPN | 80009 | 151-0190-00 |
| A2Q2140 | 151-0190-00 | B010100 | B029999X | TRANSISTOR:SILICON,NPN | 80009 | 151-0190-00 |
| A2Q2306 | 151-0190-00 | XB030000 | | TRANSISTOR:SILICON,NPN | 80009 | 151-0190-00 |
| A2Q2308 | 151-0190-00 | XB030000 | | TRANSISTOR:SILICON,NPN | 80009 | 151-0190-00 |
| A2R2005 | 311-1238-00 | B010100 | B029999X | RES.,VAR,NONWIR:5K OHM,10%,0.50W | 73138 | 72X-27-0-502K |
| A2R2014 | 321-0289-00 | XB030000 | | RES.,FXD,FILM:10K OHM,1%,0.125W | 91637 | MFF1816G10001F |
| A2R2015 | 321-0289-00 | XB030000 | | RES.,FXD,FILM:10K OHM,1%,0.125W | 91637 | MFF1816G10001F |
| A2R2016 | 321-0251-00 | XB030000 | | RES.,FXD,FILM:4.02K OHM,1%,0.125W | 91637 | MFF1816G40200F |

| Component No. | Tektronix Part No. | Serial/Model No. Eff | Dscont | Name & Description | Mfr Code | Mfr Part Number |
|---|---|---|---|---|---|---|
| A2R2017 | 321-0250-00 | XB030000 | | RES.,FXD,FILM:3.92K OHM,1%,0.125W | 91637 | MFF1816G39200F |
| A2R2025 | 321-0160-00 | B010100 | B029999 | RES.,FXD,FILM:453 OHM,1%,0.125W | 91637 | MFF1816G453R0F |
| A2R2025 | 311-1238-00 | B030000 | | RES.,VAR,NONWIR:5K OHM,10%,0.50W | 73138 | 72X-27-0-502K |
| A2R2029 | 315-0470-00 | B010100 | B029999X | RES.,FXD,CMPSN:47 OHM,5%,0.25W | 01121 | CB4705 |
| A2R2030 | 311-1245-00 | B010100 | B029999X | RES.,VAR,NONWIR:10K OHM,10%,0.50W | 73138 | 72-28-0 |
| A2R2035 | 311-1237-00 | B010100 | B029999X | RES.,VAR,NONWIR:1K OHM,10%,0.50W | 32997 | 3386X-T07-102 |
| A2R2045 | 315-0133-00 | XB030000 | | RES.,FXD,CMPSN:13K OHM,5%,0.25W | 01121 | CB1335 |
| A2R2054 | 321-0080-00 | XB030000 | | RES.,FXD,FILM:66.5 OHM,1%,0.125W | 91637 | MFF1816G66R50F |
| A2R2055 | 321-0175-00 | XB030000 | | RES.,FXD,FILM:649 OHM,1%,0.125W | 91637 | MFF1816G649R0F |
| A2R2057 | 323-0127-00 | XB030000 | | RES.,FXD,FILM:205 OHM,1%,0.50W | 75042 | CECT0-2050F |
| A2R2058 | 323-0155-00 | XB030000 | | RES.,FXD,FILM:402 OHM,1%,0.50W | 75042 | CECT0-4020F |
| A2R2063 | 323-0127-00 | B010100 | B029999X | RES.,FXD,FILM:205 OHM,1%,0.50W | 75042 | CECT0-2050F |
| A2R2073 | 315-0473-00 | | | RES.,FXD,CMPSN:47K OHM,5%,0.25W | 01121 | CB4735 |
| A2R2074 | 323-0055-00 | XB030000 | | RES.,FXD,FILM:36.5 OHM,1%,0.5W | 75042 | CECT0-35R50F |
| A2R2075 | 315-0473-00 | XB030000 | | RES.,FXD,CMPSN:47K OHM,5%,0.25W | 01121 | CB4735 |
| A2R2103 | 315-0472-00 | XB030000 | | RES.,FXD,CMPSN:4.7K OHM,5%,0.25W | 01121 | CB4725 |
| A2R2104 | 315-0392-00 | XB030000 | | RES.,FXD,CMPSN:3.9K OHM,5%,0.25W | 01121 | CB3925 |
| A2R2105 | 321-0188-00 | B010100 | B029999X | RES.,FXD,FILM:887 OHM,1%,0.125W | 91637 | MFF1816G887R0F |
| R2106 | 321-0227-00 | B010100 | B029999X | RES.,FXD,FILM:2.26K OHM,1%,0.125W | 91637 | MFF1816G22600F |
| A2R2107 | 321-0198-00 | B010100 | B029999X | RES.,FXD,FILM:1.13K OHM,1%,0.125W | 91637 | MFF1816G11300F |
| A2R2108 | 321-0085-00 | XB030000 | | RES.,FXD,FILM:75 OHM,1%,0.125W | 91637 | MFF1816G75R00F |
| A2R2113 | 315-0270-00 | B010100 | B029999X | RES.,FXD,CMPSN:27 OHM,5%,0.25W | 01121 | CB2705 |
| A2R2115 | 323-0140-00 | B010100 | B029999X | RES.,FXD,FILM:280 OHM,1%,0.50W | 75042 | CECT0-2800F |
| A2R2117 | 311-1236-00 | XB030000 | | RES.,VAR,NONWIR:250 OHM,10%,0.50W | 73138 | 72X-22-0-251K |
| A2R2119 | 321-0193-00 | XB030000 | | RES.,FXD,FILM:1K OHM,1%,0.125W | 91637 | MFF1816G10000F |
| A2R2123 | 321-0183-00 | XB030000 | | RES.,FXD,FILM:787 OHM,1%,0.125W | 91637 | MFF1816G787R0F |
| A2R2124 | 321-0223-00 | XB030000 | | RES.,FXD,FILM:2.05K OHM,1%,0.125W | 91637 | MFF1816G20500F |
| A2R2125 | 321-0198-00 | XB030000 | | RES.,FXD,FILM:1.13K OHM,1%,0.125W | 91637 | MFF1816G11300F |
| A2R2127 | 315-0270-00 | XB030000 | | RES.,FXD,CMPSN:27 OHM,5%,0.25W | 01121 | CB2705 |
| A2R2134 | 315-0561-00 | B010100 | B029999X | RES.,FXD,CMPSN:560 OHM,5%,0.25W | 01121 | CB5615 |
| A2R2135 | 323-0140-00 | XB030000 | | RES.,FXD,FILM:280 OHM,1%,0.50W | 75042 | CECT0-2800F |
| A2R2136 | 315-0121-00 | B010100 | B029999X | RES.,FXD,CMPSN:120 OHM,5%,0.25W | 01121 | CB1215 |
| A2R2137 | 323-0140-00 | XB030000 | | RES.,FXD,FILM:280 OHM,1%,0.50W | 75042 | CECT0-2800F |
| A2R2138 | 321-0061-00 | B010100 | B029999X | RES.,FXD,FILM:42.2 OHM,1%,0.125W | 91637 | MFF1816G42R20F |
| A2R2142 | 315-0561-00 | XB030000 | | RES.,FXD,CMPSN:560 OHM,5%,0.25W | 01121 | CB5615 |
| A2R2143 | 321-0061-00 | XB030000 | | RES.,FXD,FILM:42.2 OHM,1%,0.125W | 91637 | MFF1816G42R20F |
| A2R2144 | 315-0152-00 | B010100 | B029999X | RES.,FXD,CMPSN:1.5K OHM,5%,0.25W | 01121 | CB1525 |
| A2R2146 | 321-0160-00 | B010100 | B029999X | RES.,FXD,FILM:453 OHM,1%,0.125W | 91637 | MFF1816G453R0F |
| A2R2151 | 315-0202-00 | B010100 | B029999X | RES.,FXD,CMPSN:2K OHM,5%,0.25W | 01121 | CB2025 |
| A2R2153 | 321-0080-00 | B010100 | B029999X | RES.,FXD,FILM:66.5 OHM,1%,0.125W | 91637 | MFF1816G66R50F |
| A2R2154 | 323-0155-00 | XB030000 | | RES.,FXD,FILM:402 OHM,1%,0.50W | 75042 | CECT0-4020F |
| A2R2155 | 321-0175-00 | B010100 | B029999X | RES.,FXD,FILM:649 OHM,1%,0.125W | 91637 | MFF1816G649R0F |
| A2R2156 | 321-0052-00 | XB030000 | | RES.,FXD,FILM:34 OHM,1%,0.125W | 91637 | MFF1816G34R00F |
| A2R2164 | 323-0155-00 | B010100 | B029999X | RES.,FXD,FILM:402 OHM,1%,0.50W | 75042 | CECT0-4020F |
| A2R2165 | 321-0155-00 | B010100 | B029999X | RES.,FXD,FILM:402 OHM,1%,0.125W | 91637 | MFF1816G402R0F |
| A2R2166 | 321-0052-00 | B010100 | B029999X | RES.,FXD,FILM:34 OHM,1%,0.125W | 91637 | MFF1816G34R00F |
| A2R2168 | 315-0101-00 | | | RES.,FXD,CMPSN:100 OHM,5%,0.25W | 01121 | CB1015 |
| A2R2172 | 323-0055-00 | B010100 | B029999X | RES.,FXD,FILM:36.5 OHM,1%,0.5W | 75042 | CECT0-35R50F |
| A2R2173 | 315-0473-00 | B010100 | B029999X | RES.,FXD,CMPSN:47K OHM,5%,0.25W | 01121 | CB4735 |
| A2R2185 | 308-0758-00 | XB030000 | | RES.,FXD,WW:430 OHM,1%,7W | 14193 | SP1151S-430R0F |
| A2R2202 | 321-0068-00 | B010100 | B029999X | RES.,FXD,FILM:49.9 OHM,1%,0.125W | 91637 | MFF1816G49R90F |
| A2R2206 | 321-0068-00 | B010100 | B029999X | RES.,FXD,FILM:49.9 OHM,1%,0.125W | 91637 | MFF1816G49R90F |
| A2R2207 | 321-0001-00 | XB030000 | | RES.,FXD,FILM:10 OHM,1%,0.125W | 75042 | CEAT0-10R00F |
| A2R2208 | 321-0001-00 | XB030000 | | RES.,FXD,FILM:10 OHM,1%,0.125W | 75042 | CEAT0-10R00F |
| A2R2212 | 321-0193-00 | XB030000 | | RES.,FXD,FILM:1K OHM,1%,0.125W | 91637 | MFF1816G10000F |

| Component No. | Tektronix Part No. | Serial/Model No. Eff | Dscont | Name & Description | Mfr Code | Mfr Part Number |
|---|---|---|---|---|---|---|
| A2R2214 | 321-0068-00 | XB030000 | | RES.,FXD,FILM:49.9 OHM,1%,0.125W | 91637 | MFF1816G49R90F |
| A2R2218 | 321-0068-00 | XB030000 | | RES.,FXD,FILM:49.9 OHM,1%,0.125W | 91637 | MFF1816G49R90F |
| A2R2232 | 315-0121-00 | B010100 | B029999X | RES.,FXD,CMPSN:120 OHM,5%,0.25W | 01121 | CB1215 |
| A2R2242 | 315-0270-00 | B010100 | B029999X | RES.,FXD,CMPSN:27 OHM,5%,0.25W | 01121 | CB2705 |
| A2R2243 | 311-1236-00 | XB030000 | | RES.,VAR,NONWIR:250 OHM,10%,0.50W | 73138 | 72X-22-0-251K |
| A2R2244 | 315-0270-00 | XB030000 | | RES.,FXD,CMPSN:27 OHM,5%,0.25W | 01121 | CB2705 |
| A2R2245 | 311-1236-00 | B010100 | B029999X | RES.,VAR,NONWIR:250 OHM,10%,0.50W | 73138 | 72X-22-0-251K |
| A2R2246 | 315-0270-00 | XB030000 | | RES.,FXD,CMPSN:27 OHM,5%,0.25W | 01121 | CB2705 |
| A2R2247 | 321-0147-00 | B010100 | B029999 | RES.,FXD,FILM:332 OHM,1%,0.125W | 91637 | MFF1816G332R0F |
| A2R2247 | 321-0139-00 | B030000 | | RES.,FXD,FILM:274 OHM,1%,0.125W | 91637 | MFF1816G274R0F |
| A2R2262 | 315-0100-00 | XB030000 | | RES.,FXD,CMPSN:10 OHM,5%,0.25W | 01121 | CB1005 |
| A2R2267 | 315-0100-00 | B010100 | B029999X | RES.,FXD,CMPSN:10 OHM,5%,0.25W | 01121 | CB1005 |
| A2R2268 | 315-0100-00 | XB030000 | | RES.,FXD,CMPSN:10 OHM,5%,0.25W | 01121 | CB1005 |
| A2R2284 | 308-0758-00 | XB030000 | | RES.,FXD,WW:430 OHM,1%,7W | 14193 | SP1151S-430R0F |
| A2R2285 | 308-0758-00 | B010100 | B029999X | RES.,FXD,WW:430 OHM,1%,7W | 14193 | SP1151S-430R0F |
| A2R2304 | 321-0147-00 | XB030000 | | RES.,FXD,FILM:332 OHM,1%,0.125W | 91637 | MFF1816G332R0F |
| A2R2305 | 321-0147-00 | XB030000 | | RES.,FXD,FILM:332 OHM,1%,0.125W | 91637 | MFF1816G332R0F |
| A2R2306 | 315-0750-00 | B010100 | B029999X | RES.,FXD,CMPSN:75 OHM,5%,0.25W | 01121 | CB7505 |
| A2R2308 | 315-0470-00 | B010100 | B029999X | RES.,FXD,CMPSN:47 OHM,5%,0.25W | 01121 | CB4705 |
| A2R2311 | 323-0140-00 | B010100 | B029999X | RES.,FXD,FILM:280 OHM,1%,0.50W | 75042 | CECT0-2800F |
| A2R2312 | 311-1236-00 | B010100 | B029999X | RES.,VAR,NONWIR:250 OHM,10%,0.50W | 73138 | 72X-22-0-251K |
| A2R2318 | 315-0102-00 | XB030000 | | RES.,FXD,CMPSN:1K OHM,5%,0.25W | 01121 | CB1025 |
| A2R2323 | 315-0750-00 | XB030000 | | RES.,FXD,CMPSN:75 OHM,5%,0.25W | 01121 | CB7505 |
| A2R2325 | 311-1236-00 | XB030000 | | RES.,VAR,NONWIR:250 OHM,10%,0.50W | 73138 | 72X-22-0-251K |
| A2R2326 | 315-0470-00 | XB030000 | | RES.,FXD,CMPSN:47 OHM,5%,0.25W | 01121 | CB4705 |
| A2R2328 | 315-0470-00 | XB030000 | | RES.,FXD,CMPSN:47 OHM,5%,0.25W | 01121 | CB4705 |
| A2R2331 | 321-0061-00 | B010100 | B029999X | RES.,FXD,FILM:42.2 OHM,1%,0.125W | 91637 | MFF1816G42R20F |
| A2R2333 | 315-0561-00 | B010100 | B029999X | RES.,FXD,CMPSN:560 OHM,5%,0.25W | 01121 | CB5615 |
| A2R2335 | 315-0561-00 | XB030000 | | RES.,FXD,CMPSN:560 OHM,5%,0.25W | 01121 | CB5615 |
| A2R2336 | 315-0270-00 | B010100 | B029999X | RES.,FXD,CMPSN:27 OHM,5%,0.25W | 01121 | CB2705 |
| A2R2337 | 321-0061-00 | XB030000 | | RES.,FXD,FILM:42.2 OHM,1%,0.125W | 91637 | MFF1816G42R20F |
| A2R2344 | 315-0470-00 | XB030000 | | RES.,FXD,CMPSN:47 OHM,5%,0.25W | 01121 | CB4705 |
| A2R2352 | 315-0470-00 | B010100 | B029999X | RES.,FXD,CMPSN:47 OHM,5%,0.25W | 01121 | CB4705 |
| A2R2354 | 315-0470-00 | XB030000 | | RES.,FXD,CMPSN:47 OHM,5%,0.25W | 01121 | CB4705 |
| A2R2356 | 321-0052-00 | XB030000 | | RES.,FXD,FILM:34 OHM,1%,0.125W | 91637 | MFF1816G34R00F |
| A2R2357 | 323-0155-00 | XB030000 | | RES.,FXD,FILM:402 OHM,1%,0.50W | 75042 | CECT0-4020F |
| A2R2358 | 323-0155-00 | XB030000 | | RES.,FXD,FILM:402 OHM,1%,0.50W | 75042 | CECT0-4020F |
| A2R2361 | 321-0052-00 | B010100 | B029999X | RES.,FXD,FILM:34 OHM,1%,0.125W | 91637 | MFF1816G34R00F |
| A2R2363 | 323-0155-00 | B010100 | B029999X | RES.,FXD,FILM:402 OHM,1%,0.50W | 75042 | CECT0-4020F |
| A2R2367 | 315-0100-00 | B010100 | B029999X | RES.,FXD,CMPSN:10 OHM,5%,0.25W | 01121 | CB1005 |
| A2R2385 | 308-0758-00 | B010100 | B029999X | RES.,FXD,WW:430 OHM,1%,7W | 14193 | SP1151S-430R0F |
| A2R2413 | 315-0621-00 | B010100 | B029999X | RES.,FXD,CMPSN:620 OHM,5%,0.25W | 01121 | CB6215 |
| A2R2414 | 321-0147-00 | B010100 | B029999X | RES.,FXD,FILM:332 OHM,1%,0.125W | 91637 | MFF1816G332R0F |
| A2R2419 | 315-0470-00 | B010100 | B029999X | RES.,FXD,CMPSN:47 OHM,5%,0.25W | 01121 | CB4705 |
| A2R2422 | 315-0102-00 | B010100 | B029999X | RES.,FXD,CMPSN:1K OHM,5%,0.25W | 01121 | CB1025 |
| A2R2425 | 321-0147-00 | B010100 | B011167X | RES.,FXD,FILM:332 OHM,1%,0.125W | 91637 | MFF1816G332R0F |
| A2R2425 | 321-0152-00 | B011168 | B029999X | RES.,FXD,FILM:374 OHM,1%,0.125W | 91637 | MFF1816G374R0F |
| A2R2426 | 311-1564-00 | XB030000 | | RES.,VAR,NONWIR:500 OHM,20%,0.50W | 73138 | 91A R500 |
| A2R2432 | 311-1560-00 | XB030000 | | RES.,VAR,NONWIR:5K OHM,5%,0.50W | 73138 | 91A R5K |
| A2R2436 | 311-1559-00 | XB030000 | | RES.,VAR,NONWIR:10K OHM,20%,0.50W | 73138 | 91A-10001M |
| A2R2445 | 315-0470-00 | B010100 | B029999X | RES.,FXD,CMPSN:47 OHM,5%,0.25W | 01121 | CB4705 |
| A2R2446 | 311-1559-00 | XB030000 | | RES.,VAR,NONWIR:10K OHM,20%,0.50W | 73138 | 91A-10001M |
| A2R2447 | 321-0178-00 | XB030000 | | RES.,FXD,FILM:698 OHM,1%,0.125W | 91637 | MFF1816G698R0F |
| A2R2448 | 311-1558-00 | XB030000 | | RES.,VAR,NONWIR:20K OHM,20%,0.50W | 73138 | 91-80-0 |
| A2R2451 | 321-0178-00 | B010100 | B029999X | RES.,FXD,FILM:698 OHM,1%,0.125W | 91637 | MFF1816G698R0F |

| Component No. | Tektronix Part No. | Serial/Model No. Eff | Dscont | Name & Description | Mfr Code | Mfr Part Number |
|---|---|---|---|---|---|---|
| A2R2455 | 321-0178-00 | XB030000 | | RES.,FXD,FILM:698 OHM,1%,0.125W | 91637 | MFF1816G698R0F |
| A2R2461 | 323-0155-00 | B010100 | B029999X | RES.,FXD,FILM:402 OHM,1%,0.50W | 75042 | CECT0-4020F |
| A2R2463 | 321-0178-00 | B010100 | B029999X | RES.,FXD,FILM:698 OHM,1%,0.125W | 91637 | MFF1816G698R0F |
| A2R2465 | 315-0473-00 | XB030000 | | RES.,FXD,CMPSN:47K OHM,5%,0.25W | 01121 | CB4735 |
| A2R2466 | 315-0473-00 | XB030000 | | RES.,FXD,CMPSN:47K OHM,5%,0.25W | 01121 | CB4735 |
| A2R2467 | 315-0473-00 | B010100 | B029999X | RES.,FXD,CMPSN:47K OHM,5%,0.25W | 01121 | CB4735 |
| A2R2468 | 315-0473-00 | B010100 | B029999X | RES.,FXD,CMPSN:47K OHM,5%,0.25W | 01121 | CB4735 |
| A2R2472 | 315-0202-00 | XB030000 | | RES.,FXD,CMPSN:2K OHM,5%,0.25W | 01121 | CB2025 |
| A2R2475 | 315-0202-00 | B010100 | B029999X | RES.,FXD,CMPSN:2K OHM,5%,0.25W | 01121 | CB2025 |
| A2R2476 | 315-0821-00 | XB030000 | | RES.,FXD,CMPSN:820 OHM,5%,0.25W | 01121 | CB8215 |
| A2R2520 | 311-1564-00 | B010100 | B029999X | RES.,VAR,NONWIR:500 OHM,20%,0.50W | 73138 | 91A R500 |
| A2R2530 | 311-1560-00 | B010100 | B029999X | RES.,VAR,NONWIR:5K OHM,5%,0.50W | 73138 | 91A R5K |
| A2R2535 | 311-1559-00 | B010100 | B029999X | RES.,VAR,NONWIR:10K OHM,20%,0.50W | 73138 | 91A-10001M |
| A2R2540 | 311-1559-00 | B010100 | B029999X | RES.,VAR,NONWIR:10K OHM,20%,0.50W | 73138 | 91A-10001M |
| A2R2550 | 311-1558-00 | B010100 | B029999X | RES.,VAR,NONWIR:20K OHM,20%,0.50W | 73138 | 91-80-0 |
| A2RT2304 | 307-0125-00 | B010100 | B029999X | RES.,THERMAL:500 OHM,10%,25 DEG C | 50157 | 2D1595 |
| A2RT2333 | 307-0125-00 | XB030000 | | RES.,THERMAL:500 OHM,10%,25 DEG C | 50157 | 2D1595 |
| A2U2005 | 156-0067-00 | XB030000 | | MICROCIRCUIT,LI:OPERATIONAL AMPLIFIER | 80009 | 156-0067-00 |
| A2U2210 | 155-0078-10 | B010100 | B029999X | MICROCIRCUIT,LI:ML,VERTICAL AMPLIFIER | 80009 | 155-0078-10 |
| A2U2225 | 155-0078-10 | XB030000 | | MICROCIRCUIT,LI:ML,VERTICAL AMPLIFIER | 80009 | 155-0078-10 |
| A2U2255 | 155-0115-00 | XB030000 | | MICROCIRCUIT,LI:CRT VERT DEFLECTION DRIVER | 80009 | 155-0115-00 |
| A2U2260 | 155-0115-00 | B010100 | B029999X | MICROCIRCUIT,LI:CRT VERT DEFLECTION DRIVER | 80009 | 155-0115-00 |
| A2U2385 | 156-0067-00 | XB030000 | | MICROCIRCUIT,LI:OPERATIONAL AMPLIFIER | 80009 | 156-0067-00 |
| A2U2480 | 156-0067-00 | B010100 | B029999X | MICROCIRCUIT,LI:OPERATIONAL AMPLIFIER | 80009 | 156-0067-00 |
| A2VR2211 | 152-0195-00 | B010100 | B029999X | SEMICOND DEVICE:ZENER,0.4W,5.1V,5% | 80009 | 152-0195-00 |
| A2VR2212 | 152-0278-00 | B010100 | B029999X | SEMICOND DEVICE:ZENER,0.4W,3V,5% | 80009 | 152-0278-00 |
| A2VR2215 | 152-0195-00 | B010100 | B029999X | SEMICOND DEVICE:ZENER,0.4W,5.1V,5% | 80009 | 152-0195-00 |
| A2VR2232 | 152-0195-00 | XB030000 | | SEMICOND DEVICE:ZENER,0.4W,5.1V,5% | 80009 | 152-0195-00 |
| A2VR2234 | 152-0278-00 | XB030000 | | SEMICOND DEVICE:ZENER,0.4W,3V,5% | 80009 | 152-0278-00 |
| A2VR2238 | 152-0195-00 | XB030000 | | SEMICOND DEVICE:ZENER,0.4W,5.1V,5% | 80009 | 152-0195-00 |
| A2W2472 | 131-0566-00 | B010100 | B029999X | LINK,TERM.CONNE:0.086 DIA X 2.375 INCH L | 55210 | L-2007-1 |

For Service Manuals Contact
MAURITRON TECHNICAL SERVICES
8 Cherry Tree Rd, Chinnor
Oxon OX9 4QY
Tel:- 01844-351694 Fax:- 01844-352554
Email:- enquiries@mauritron.co.uk

| Component No. | Tektronix Part No. | Serial/Model No. Eff | Dscont | Name & Description | Mfr Code | Mfr Part Number |
|---|---|---|---|---|---|---|
| A3 | ----- ----- | | | CKT BOARD ASSY:ATTENUATOR | | |
| A3C30 | ----- ----- | | | (SEE CHASSIS PARTS) | | |
| A3C31 | ----- ----- | | | (SEE CHASSIS PARTS) | | |
| A3C32 | ----- ----- | | | (SEE CHASSIS PARTS) | | |
| A3C33 | ----- ----- | | | (SEE CHASSIS PARTS) | | |
| A3C34 | ----- ----- | | | (SEE CHASSIS PARTS) | | |
| A3C35 | ----- ----- | | | (SEE CHASSIS PARTS) | | |
| A3C36 | ----- ----- | | | (SEE CHASSIS PARTS) | | |
| A3C37 | ----- ----- | | | (SEE CHASSIS PARTS) | | |
| A3C3042 | 283-0156-00 | | | CAP.,FXD,CER DI:1000PF,+100-0%,200V | 72982 | 8111A208Z5U0102Z |
| A3R3014 | 315-0105-00 | | | RES.,FXD,CMPSN:1M OHM,5%,0.25W | 01121 | CB1055 |
| A3R3015 | 315-0220-00 | | | RES.,FXD,CMPSN:22 OHM,5%,0.25W | 01121 | CB2205 |
| A3R3030 | 317-0100-00 | B010100 | B010239 | RES.,FXD,CMPSN:10 OHM,(NOM VALUE),SEL | 01121 | BB1005 |
| A3R3030 | 317-0220-00 | B010240 | | RES.,FXD,CMPSN:22 OHM,(NOM VALUE),SEL | 01121 | BB2205 |
| A3R3032 | 315-0360-00 | | | RES.,FXD,CMPSN:36 OHM,5%,0.25W | 01121 | CB3605 |
| A3R3033 | 317-0220-00 | B010100 | B010872 | RES.,FXD,CMPSN:22 OHM,(NOM VALUE),SEL | 01121 | BB2205 |
| A3R3033 | 317-0100-00 | B010873 | | RES.,FXD,CMPSN:10 OHM,(NOM VALUE),SEL | 01121 | BB1005 |
| A3R3036 | 317-0100-00 | | | RES.,FXD,CMPSN:10 OHM,5%,0.125W | 01121 | BB1005 |
| A3R3039 | 321-0481-00 | | | RES.,FXD,FILM:1M OHM,1%,0.125W | 91637 | MFF1816G10003F |
| A3R3042 | 317-0474-00 | | | RES.,FXD,CMPSN:470K OHM,5%,0.125W | 01121 | BB4745 |
| A3R3045 | 315-0300-00 | | | RES.,FXD,CMPSN:30 OHM,5%,0.25W | 01121 | CB3005 |

| Component No. | Tektronix Part No. | Serial/Model No. Eff | Dscont | Name & Description | Mfr Code | Mfr Part Number |
|---|---|---|---|---|---|---|
| A4 | ----- ----- | | | CKT BOARD ASSY:INTERFACE | | |
| A4C4003 | 290-0536-00 | | | CAP.,FXD,ELCTLT:10UF,20%,25V | 90201 | TDC106M025FL |
| A4C4005 | 283-0002-00 | | | CAP.,FXD,CER DI:0.01UF,+80-20%,500V | 72982 | 811-546E103Z |
| A4C4006 | 290-0316-00 | | | CAP.,FXD,ELCTLT:47UF,20%,35V | 56289 | 150D476X0035S2 |
| A4C4010 | 281-0622-00 | | | CAP.,FXD,CER DI:47PF,1%,500V | 72982 | 308-000C0G0470F |
| A4C4012 | 283-0203-00 | | | CAP.,FXD,CER DI:0.47UF,20%,50V | 72982 | 8131N075 E474M |
| A4C4016 | 285-0509-01 | | | CAP.,FXD,PLSTC:0.0068UF,20%,5000V | 56289 | 430P507 |
| A4C4020 | 285-0509-01 | | | CAP.,FXD,PLSTC:0.0068UF,20%,5000V | 56289 | 430P507 |
| A4C4025 | 285-0509-01 | | | CAP.,FXD,PLSTC:0.0068UF,20%,5000V | 56289 | 430P507 |
| A4C4036 | 281-0773-00 | | | CAP.,FXD,CER DI:0.01UF,10%,100V | 72982 | 8005H9AADW5R103K |
| A4C4037 | 283-0003-00 | | | CAP.,FXD,CER DI:0.01UF,+80-20%,150V | 72982 | 855-558Z5U-103Z |
| A4C4038 | 285-1040-00 | | | CAP.,FXD,PLSTC:0.0012UF,10%,4000V | 56289 | 430P522 |
| A4C4039 | 283-0003-00 | | | CAP.,FXD,CER DI:0.01UF,+80-20%,150V | 72982 | 855-558Z5U-103Z |
| A4C4043 | 281-0773-00 | | | CAP.,FXD,CER DI:0.01UF,10%,100V | 72982 | 8005H9AADW5R103K |
| A4C4104 | 290-0164-00 | | | CAP.,FXD,ELCTLT:1UF,+50-10%,150V | 56289 | 500D105F150BA7 |
| A4C4107 | 283-0178-00 | | | CAP.,FXD,CER DI:0.1UF,+80-20%,100V | 72982 | 8131N145651 104Z |
| A4C4113 | 283-0002-00 | | | CAP.,FXD,CER DI:0.01UF,+80-20%,500V | 72982 | 811-546E103Z |
| A4C4114 | 283-0057-00 | | | CAP.,FXD,CER DI:0.1UF,+80-20%,200V | 56289 | 274C10 |
| A4C4116 | 283-0057-00 | | | CAP.,FXD,CER DI:0.1UF,+80-20%,200V | 56289 | 274C10 |
| A4C4117 | 285-1040-00 | | | CAP.,FXD,PLSTC:0.0012UF,10%,4000V | 56289 | 430P522 |
| A4C4118 | 285-0507-01 | | | CAP.,FXD,PPR DI:0.0047UF,20%,10KV | 56289 | 430P472060 |
| A4C4126 | 285-1040-00 | | | CAP.,FXD,PLSTC:0.0012UF,10%,4000V | 56289 | 430P522 |
| A4C4150 | 283-0328-00 | | | CAP.,FXD,CER DI:0.03UF,+80-20%,200V | 72982 | 8131N225Z5U0303Z |
| A4C4153 | 283-0003-00 | | | CAP.,FXD,CER DI:0.01UF,+80-20%,150V | 72982 | 855-558Z5U-103Z |
| A4C4159 | 281-0773-00 | | | CAP.,FXD,CER DI:0.01UF,10%,100V | 72982 | 8005H9AADW5R103K |
| A4C4164 | 281-0816-00 | | | CAP.,FXD,CER DI:82PF,5%,100V | 16546 | C40A820J |
| A4C4175 | 281-0812-00 | | | CAP.,FXD,CER DI:1000PF,10%,100V | 72982 | 8035D9AADX7R102K |
| A4C4187 | 285-0686-00 | | | CAP.,FXD,PLSTC:0.068UF,10%,100V | 56289 | 410P68391 |
| A4C4192 | 281-0767-00 | | | CAP.,FXD,CER DI:330PF,20%,100V | 12969 | CGB331MEX |
| A4C4203 | 290-0535-00 | | | CAP.,FXD,ELCTLT:33UF,20%,10V | 56289 | 196D336X0010KA1 |
| A4C4204 | 281-0775-00 | | | CAP.,FXD,CER DI:0.1UF,20%,50V | 72982 | 8005D9AABZ5U104M |
| A4C4216 | 283-0002-00 | | | CAP.,FXD,CER DI:0.01UF,+80-20%,500V | 72982 | 811-546E103Z |
| A4C4217 | 281-0064-00 | | | CAP.,VAR,PLSTC:0.25-1.5PF,600V | 72982 | 530-002 |
| A4C4226 | 281-0788-00 | | | CAP.,FXD,CER DI:470PF,10%,100V | 72982 | 8005H9AADW5R471K |
| A4C4229 | 283-0198-00 | | | CAP.,FXD,CER DI:0.22UF,20%,50V | 72982 | 8121N083Z5U0224M |
| A4C4246 | 281-0168-00 | | | CAP.,VAR,AIR DI:1.3-5.4PF,250V | 74970 | 187-0103-035 |
| A4C4247 | 281-0168-00 | | | CAP.,VAR,AIR DI:1.3-5.4PF,250V | 74970 | 187-0103-035 |
| A4C4262 | 283-0024-00 | | | CAP.,FXD,CER DI:0.1UF,+80-20%,30V | 72982 | 8121N083Z5U0104Z |
| A4C4271 | 281-0812-00 | | | CAP.,FXD,CER DI:1000PF,10%,100V | 72982 | 8035D9AADX7R102K |
| A4C4283 | 283-0004-00 | | | CAP.,FXD,CER DI:0.02UF,+80-20%,150V | 72982 | 855-558-Z5V0203Z |
| A4C4285 | 281-0775-00 | | | CAP.,FXD,CER DI:0.1UF,20%,50V | 72982 | 8005D9AABZ5U104M |
| A4C4288 | 283-0004-00 | | | CAP.,FXD,CER DI:0.02UF,+80-20%,150V | 72982 | 855-558-Z5V0203Z |
| A4C4291 | 281-0762-00 | | | CAP.,FXD,CER DI:27PF,20%,100V | 72982 | 8035D9AADC0G270M |
| A4C4292 | 290-0532-00 | | | CAP.,FXD,ELCTLT:150UF,20%,6V | 90201 | TDC157M006WLC |
| A4C4303 | 290-0305-00 | | | CAP.,FXD,ELCTLT:3UF,20%,150V | 56289 | 109D305X0150C2 |
| A4C4305 | 281-0812-00 | | | CAP.,FXD,CER DI:1000PF,10%,100V | 72982 | 8035D9AADX7R102K |
| A4C4306 | 281-0783-00 | | | CAP.,FXD,CER DI:0.1UF,20%,100V | 72982 | 8045-D-Z5U104M |
| A4C4307 | 281-0774-00 | | | CAP.,FXD,CER DI:0.022UF,20%,100V | 72982 | 8045A9ABDZ5U223M |
| A4C4311 | 281-0773-00 | | | CAP.,FXD,CER DI:0.01UF,10%,100V | 72982 | 8005H9AADW5R103K |
| A4C4326 | 290-0535-00 | | | CAP.,FXD,ELCTLT:33UF,20%,10V | 56289 | 196D336X0010KA1 |
| A4C4327 | 290-0149-00 | | | CAP.,FXD,ELCTLT:5UF,+75-10%,150V | 56289 | 30D505G150DD4 |
| A4C4331 | 290-0529-00 | | | CAP.,FXD,ELCTLT:47UF,20%,20V | 05397 | T368C476M020AZ |
| A4C4341 | 283-0328-00 | | | CAP.,FXD,CER DI:0.03UF,+80-20%,200V | 72982 | 8131N225Z5U0303Z |
| A4C4351 | 281-0773-00 | | | CAP.,FXD,CER DI:0.01UF,10%,100V | 72982 | 8005H9AADW5R103K |
| A4C4352 | 283-0003-00 | | | CAP.,FXD,CER DI:0.01UF,+80-20%,150V | 72982 | 855-558Z5U-103Z |

| Component No. | Tektronix Part No. | Serial/Model No. Eff | Dscont | Name & Description | Mfr Code | Mfr Part Number |
|---|---|---|---|---|---|---|
| A4C4361 | 281-0816-00 | | | CAP.,FXD,CER DI:82PF,5%,100V | 16546 | C40A820J |
| A4C4362 | 281-0775-00 | | | CAP.,FXD,CER DI:0.1UF,20%,50V | 72982 | 8005D9AABZ5U104M |
| A4C4375 | 281-0775-00 | | | CAP.,FXD,CER DI:0.1UF,20%,50V | 72982 | 8005D9AABZ5U104M |
| A4C4391 | 281-0775-00 | | | CAP.,FXD,CER DI:0.1UF,20%,50V | 72982 | 8005D9AABZ5U104M |
| A4C4398 | 281-0773-00 | | | CAP.,FXD,CER DI:0.01UF,10%,100V | 72982 | 8005H9AADW5R103K |
| A4C4407 | 281-0775-00 | | | CAP.,FXD,CER DI:0.1UF,20%,50V | 72982 | 8005D9AABZ5U104M |
| A4C4419 | 290-0571-00 | | | CAP.,FXD,ELCTLT:5000UF,+100-0%,25V | 90201 | PFP20-36043 |
| A4C4429 | 290-0638-00 | | | CAP.,FXD,ELCTLT:1200UF,+75-10%,100V | 56289 | 68D10529 |
| A4C4439 | 290-0670-00 | | | CAP.,FXD,ELCTLT:550UF,+75-10%,100V | 56289 | 68D10512 |
| A4C4441 | 290-0527-00 | | | CAP.,FXD,ELCTLT:15UF,20%,20V | 90201 | TDC156M020FL |
| A4C4442 | 283-0178-00 | | | CAP.,FXD,CER DI:0.1UF,+80-20%,100V | 72982 | 8131N145651 104Z |
| A4C4461 | 290-0807-00 | | | CAP.,FXD,ELCTLT:1000UF,+100-10%,10VDC | 90201 | TT102N010E1C3P |
| A4C4472 | 281-0774-00 | | | CAP.,FXD,CER DI:0.022UF,20%,100V | 72982 | 8045A9ABDZ5U223M |
| A4C4473 | 281-0767-00 | | | CAP.,FXD,CER DI:330PF,20%,100V | 12969 | CGB331MEX |
| A4C4476 | 290-0527-00 | | | CAP.,FXD,ELCTLT:15UF,20%,20V | 90201 | TDC156M020FL |
| A4C4477 | 281-0756-00 | | | CAP.,FXD,CER DI:2.2PF,0.5%,200V | 72982 | 0314022C0K0229D |
| A4C4487 | 281-0788-00 | | | CAP.,FXD,CER DI:470PF,10%,100V | 72982 | 8005H9AADW5R471K |
| A4C4497 | 281-0774-00 | | | CAP.,FXD,CER DI:0.022UF,20%,100V | 72982 | 8045A9ABDZ5U223M |
| A4C4521 | 290-0584-00 | | | CAP.,FXD,ELCTLT:5500UF,+100-10%,30V | 90201 | PFP552GN4A3P2 |
| A4C4531 | 290-0571-00 | | | CAP.,FXD,ELCTLT:5000UF,+100-0%,25V | 90201 | PFP20-36043 |
| A4C4532 | 281-0580-00 | | | CAP.,FXD,CER DI:470PF,10%,500V | 04222 | 7001-1374 |
| A4C4533 | 281-0775-00 | | | CAP.,FXD,CER DI:0.1UF,20%,50V | 72982 | 8005D9AABZ5U104M |
| A4C4554 | 281-0760-00 | | | CAP.,FXD,CER DI:22PF,10%,500V | 72982 | 0314021 C0G0220K |
| A4C4563 | 281-0785-00 | | | CAP.,FXD,CER DI:68PF,10%,100V | 72982 | 8035D2AADC0G680K |
| A4C4567 | 281-0774-00 | | | CAP.,FXD,CER DI:0.022UF,20%,100V | 72982 | 8045A9ABDZ5U223M |
| A4C4568 | 281-0787-00 | | | CAP.,FXD,CER DI:15PF,5%,500V | 72982 | 0314021C0G0150J |
| A4C4569 | 281-0762-00 | | | CAP.,FXD,CER DI:27PF,20%,100V | 72982 | 8035D9AADC0G270M |
| A4C4571 | 290-0512-00 | | | CAP.,FXD,ELCTLT:22UF,20%,15V | 56289 | 196D226X0015KA1 |
| A4C4572 | 290-0527-00 | | | CAP.,FXD,ELCTLT:15UF,20%,20V | 90201 | TDC156M020FL |
| A4C4575 | 283-0178-00 | | | CAP.,FXD,CER DI:0.1UF,+80-20%,100V | 72982 | 8131N145651 104Z |
| A4C4585 | 281-0759-00 | | | CAP.,FXD,CER DI:22PF,10%,100V | 72982 | 8035D9AADC1G220K |
| A4C4592 | 281-0814-00 | | | CAP.,FXD,CER DI:100PF,10%,100V | 72982 | 8035D2AADC0G101K |
| A4C4593 | 281-0814-00 | | | CAP.,FXD,CER DI:100PF,10%,100V | 72982 | 8035D2AADC0G101K |
| A4C4594 | 281-0774-00 | | | CAP.,FXD,CER DI:0.022UF,20%,100V | 72982 | 8045A9ABDZ5U223M |
| A4C4597 | 281-0771-00 | | | CAP.,FXD,CER DI:0.0022UF,20%,200V | 72982 | 314-022Z5U0222M |
| A4C4598 | 281-0760-00 | | | CAP.,FXD,CER DI:22PF,10%,500V | 72982 | 0314021 C0G0220K |
| A4CR4002 | 152-0141-02 | | | SEMICOND DEVICE:SILICON,30V,50NA | 80009 | 152-0141-02 |
| A4CR4004 | 152-0141-02 | | | SEMICOND DEVICE:SILICON,30V,50NA | 80009 | 152-0141-02 |
| A4CR4005 | 152-0141-02 | | | SEMICOND DEVICE:SILICON,30V,50NA | 80009 | 152-0141-02 |
| A4CR4010 | 152-0141-02 | | | SEMICOND DEVICE:SILICON,30V,50NA | 80009 | 152-0141-02 |
| A4CR4021 | 152-0409-00 | | | SEMICOND DEVICE:SILICON,12,000V,5MA | 80009 | 152-0409-00 |
| A4CR4104 | 152-0141-02 | | | SEMICOND DEVICE:SILICON,30V,50NA | 80009 | 152-0141-02 |
| A4CR4105 | 152-0141-02 | | | SEMICOND DEVICE:SILICON,30V,50NA | 80009 | 152-0141-02 |
| A4CR4108 | 152-0107-00 | | | SEMICOND DEVICE:SILICON,400V,400MA | 80009 | 152-0107-00 |
| A4CR4111 | 152-0061-00 | | | SEMICOND DEVICE:SILICON,175V,100MA | 80009 | 152-0061-00 |
| A4CR4112 | 152-0061-00 | | | SEMICOND DEVICE:SILICON,175V,100MA | 80009 | 152-0061-00 |
| A4CR4115 | 152-0141-02 | | | SEMICOND DEVICE:SILICON,30V,50NA | 80009 | 152-0141-02 |
| A4CR4122 | 152-0242-00 | | | SEMICOND DEVICE:SILICON,225V,200MA | 80009 | 152-0242-00 |
| A4CR4123 | 152-0242-00 | | | SEMICOND DEVICE:SILICON,225V,200MA | 80009 | 152-0242-00 |
| A4CR4144 | 152-0141-02 | | | SEMICOND DEVICE:SILICON,30V,50NA | 80009 | 152-0141-02 |
| A4CR4159 | 152-0141-02 | | | SEMICOND DEVICE:SILICON,30V,50NA | 80009 | 152-0141-02 |
| A4CR4216 | 152-0061-00 | | | SEMICOND DEVICE:SILICON,175V,100MA | 80009 | 152-0061-00 |
| A4CR4218 | 152-0141-02 | | | SEMICOND DEVICE:SILICON,30V,50NA | 80009 | 152-0141-02 |
| A4CR4261A,B | 152-0141-02 | | | SEMICOND DEVICE:SILICON,30V,50NA | 80009 | 152-0141-02 |
| A4CR4266 | 152-0322-00 | | | SEMICOND DEVICE:SILICON,15V,HOT CARRIER | 80009 | 152-0322-00 |

| Component No. | Tektronix Part No. | Serial/Model No. Eff | Dscont | Name & Description | Mfr Code | Mfr Part Number |
|---|---|---|---|---|---|---|
| A4CR4267 | 152-0322-00 | | | SEMICOND DEVICE:SILICON,15V,HOT CARRIER | 80009 | 152-0322-00 |
| A4CR4285 | 152-0141-02 | | | SEMICOND DEVICE:SILICON,30V,50NA | 80009 | 152-0141-02 |
| A4CR4287 | 152-0141-02 | | | SEMICOND DEVICE:SILICON,30V,50NA | 80009 | 152-0141-02 |
| A4CR4291 | 152-0141-02 | | | SEMICOND DEVICE:SILICON,30V,50NA | 80009 | 152-0141-02 |
| A4CR4302 | 152-0141-02 | | | SEMICOND DEVICE:SILICON,30V,50NA | 80009 | 152-0141-02 |
| A4CR4303 | 152-0066-00 | | | SEMICOND DEVICE:SILICON,400V,750MA | 80009 | 152-0066-00 |
| A4CR4304 | 152-0061-00 | | | SEMICOND DEVICE:SILICON,175V,100MA | 80009 | 152-0061-00 |
| A4CR4311 | 152-0061-00 | | | SEMICOND DEVICE:SILICON,175V,100MA | 80009 | 152-0061-00 |
| A4CR4312 | 152-0141-02 | | | SEMICOND DEVICE:SILICON,30V,50NA | 80009 | 152-0141-02 |
| A4CR4318 | 152-0141-02 | | | SEMICOND DEVICE:SILICON,30V,50NA | 80009 | 152-0141-02 |
| A4CR4321 | 152-0141-02 | | | SEMICOND DEVICE:SILICON,30V,50NA | 80009 | 152-0141-02 |
| A4CR4322 | 152-0141-02 | | | SEMICOND DEVICE:SILICON,30V,50NA | 80009 | 152-0141-02 |
| A4CR4326 | 152-0304-00 | | | SEMICOND DEVICE:ZENER,0.4W,20V,5% | 80009 | 152-0304-00 |
| A4CR4328 | 152-0061-00 | | | SEMICOND DEVICE:SILICON,175V,100MA | 80009 | 152-0061-00 |
| A4CR4329 | 152-0333-00 | | | SEMICOND DEVICE:SILICON,55V,200MA | 80009 | 152-0333-00 |
| A4CR4342 | 152-0141-02 | | | SEMICOND DEVICE:SILICON,30V,50NA | 80009 | 152-0141-02 |
| A4CR4381 | 152-0141-02 | | | SEMICOND DEVICE:SILICON,30V,50NA | 80009 | 152-0141-02 |
| A4CR4396 | 152-0141-02 | | | SEMICOND DEVICE:SILICON,30V,50NA | 80009 | 152-0141-02 |
| A4CR4405 | 152-0066-00 | | | SEMICOND DEVICE:SILICON,400V,750MA | 80009 | 152-0066-00 |
| A4CR4406 | 152-0141-02 | | | SEMICOND DEVICE:SILICON,30V,50NA | 80009 | 152-0141-02 |
| A4CR4411 | 152-0556-00 | | | SEMICOND DEVICE:BRIDGE,50V,2.5A | 04713 | SDA10271K |
| A4CR4423 | 152-0107-00 | | | SEMICOND DEVICE:SILICON,400V,400MA | 80009 | 152-0107-00 |
| A4CR4425 | 152-0066-00 | | | SEMICOND DEVICE:SILICON,400V,750MA | 80009 | 152-0066-00 |
| A4CR4426 | 152-0066-00 | | | SEMICOND DEVICE:SILICON,400V,750MA | 80009 | 152-0066-00 |
| A4CR4431 | 152-0107-00 | | | SEMICOND DEVICE:SILICON,400V,400MA | 80009 | 152-0107-00 |
| A4CR4441 | 152-0141-02 | | | SEMICOND DEVICE:SILICON,30V,50NA | 80009 | 152-0141-02 |
| A4CR4442 | 152-0153-00 | | | SEMICOND DEVICE:SILICON,15V,50MA | 80009 | 152-0153-00 |
| A4CR4465 | 152-0141-02 | | | SEMICOND DEVICE:SILICON,30V,50NA | 80009 | 152-0141-02 |
| A4CR4466 | 152-0141-02 | | | SEMICOND DEVICE:SILICON,30V,50NA | 80009 | 152-0141-02 |
| A4CR4467 | 152-0141-02 | | | SEMICOND DEVICE:SILICON,30V,50NA | 80009 | 152-0141-02 |
| A4CR4471 | 152-0141-02 | | | SEMICOND DEVICE:SILICON,30V,50NA | 80009 | 152-0141-02 |
| A4CR4472 | 152-0141-02 | | | SEMICOND DEVICE:SILICON,30V,50NA | 80009 | 152-0141-02 |
| A4CR4515 | 152-0066-00 | | | SEMICOND DEVICE:SILICON,400V,750MA | 80009 | 152-0066-00 |
| A4CR4516 | 152-0556-00 | | | SEMICOND DEVICE:BRIDGE,50V,2.5A | 04713 | SDA10271K |
| A4CR4528 | 152-0556-00 | | | SEMICOND DEVICE:BRIDGE,50V,2.5A | 04713 | SDA10271K |
| A4CR4531 | 152-0488-00 | | | SEMICOND DEVICE:SILICON,200V,1500MA | 80009 | 152-0488-00 |
| A4CR4546 | 152-0141-02 | | | SEMICOND DEVICE:SILICON,30V,50NA | 80009 | 152-0141-02 |
| A4CR4551 | 152-0141-02 | | | SEMICOND DEVICE:SILICON,30V,50NA | 80009 | 152-0141-02 |
| A4CR4552 | 152-0141-02 | | | SEMICOND DEVICE:SILICON,30V,50NA | 80009 | 152-0141-02 |
| A4CR4567 | 152-0141-02 | | | SEMICOND DEVICE:SILICON,30V,50NA | 80009 | 152-0141-02 |
| A4CR4577 | 152-0141-02 | | | SEMICOND DEVICE:SILICON,30V,50NA | 80009 | 152-0141-02 |
| A4CR4581 | 152-0141-02 | | | SEMICOND DEVICE:SILICON,30V,50NA | 80009 | 152-0141-02 |
| A4CR4582 | 152-0141-02 | | | SEMICOND DEVICE:SILICON,30V,50NA | 80009 | 152-0141-02 |
| A4CR4592 | 152-0141-02 | | | SEMICOND DEVICE:SILICON,30V,50NA | 80009 | 152-0141-02 |
| A4CR4597 | 152-0141-02 | | | SEMICOND DEVICE:SILICON,30V,50NA | 80009 | 152-0141-02 |
| A4DS4124 | 150-0002-00 | | | LAMP,GLOW:0.5 MA 60/125V | 74276 | NE-2T(T2) |
| A4DS4125 | 150-0002-00 | | | LAMP,GLOW:0.5 MA 60/125V | 74276 | NE-2T(T2) |
| A4F4501 | 159-0059-00 | | | FUSE,WIRE LEAD:5A,FAST-BLOW | 71400 | GFA5 |
| A4F4507 | 159-0059-00 | | | FUSE,WIRE LEAD:5A,FAST-BLOW | 71400 | GFA5 |
| A4F4508 | 159-0016-00 | | | FUSE,CARTRIDGE:3AG,1.5A,250V,FAST-BLOW | 71400 | AGC 1 1/2 |
| A4J4463 | 136-0499-12 | | | CONNECTOR,RCPT,:12 CONTACT | 00779 | 4-380949-2 |
| A4J4487 | 136-0499-14 | | | CONNECTOR,RCPT,:14 CONTACT | 00779 | 4-380949-4 |
| A4L4006 | 108-0422-00 | | | COIL,RF:80UH | 80009 | 108-0422-00 |
| A4L4292 | 108-0245-00 | | | COIL,RF:3.9UH | 80009 | 108-0245-00 |
| A4L4593 | 108-0328-00 | | | COIL,RF:0.3UH | 80009 | 108-0328-00 |

| Component No. | Tektronix Part No. | Serial/Model No. Eff | Dscont | Name & Description | Mfr Code | Mfr Part Number |
|---|---|---|---|---|---|---|
| A4Q4002 | 151-0188-00 | | | TRANSISTOR:SILICON,PNP | 80009 | 151-0188-00 |
| A4Q4008 | 151-0136-00 | | | TRANSISTOR:SILICON,NPN | 80009 | 151-0136-00 |
| A4Q4102 | ----- ----- | | | (SEE CHASSIS PARTS) | | |
| A4Q4103 | 151-0190-00 | | | TRANSISTOR:SILICON,NPN | 80009 | 151-0190-00 |
| A4Q4105 | 151-0302-00 | | | TRANSISTOR:SILICON,NPN | 80009 | 151-0302-00 |
| A4Q4106 | 151-0302-00 | | | TRANSISTOR:SILICON,NPN | 80009 | 151-0302-00 |
| A4Q4146 | 151-0406-00 | | | TRANSISTOR:SILICON,PNP | 80009 | 151-0406-00 |
| A4Q4150 | 151-0407-00 | | | TRANSISTOR:SILICON,NPN | 80009 | 151-0407-00 |
| A4Q4161 | 151-0302-00 | | | TRANSISTOR:SILICON,NPN | 80009 | 151-0302-00 |
| A4Q4169 | 151-0190-00 | | | TRANSISTOR:SILICON,NPN | 80009 | 151-0190-00 |
| A4Q4182 | 151-0342-00 | | | TRANSISTOR:SILICON,PNP | 80009 | 151-0342-00 |
| A4Q4190 | ----- ----- | | | (SEE CHASSIS PARTS) | | |
| A4Q4196 | 151-0342-00 | | | TRANSISTOR:SILICON,PNP | 80009 | 151-0342-00 |
| A4Q4213 | 151-0406-00 | | | TRANSISTOR:SILICON,PNP | 80009 | 151-0406-00 |
| A4Q4217 | 151-0407-00 | | | TRANSISTOR:SILICON,NPN | 80009 | 151-0407-00 |
| A4Q4222 | 151-0188-00 | | | TRANSISTOR:SILICON,PNP | 80009 | 151-0188-00 |
| A4Q4223 | 151-0223-00 | | | TRANSISTOR:SILICON,NPN | 80009 | 151-0223-00 |
| A4Q4228 | 151-0126-00 | | | TRANSISTOR:SILICON,NPN | 80009 | 151-0126-00 |
| A4Q4233 | 151-0301-00 | | | TRANSISTOR:SILICON,PNP | 04713 | 2N2907A |
| A4Q4273 | 151-0188-00 | | | TRANSISTOR:SILICON,PNP | 80009 | 151-0188-00 |
| A4Q4274 | 151-0188-00 | | | TRANSISTOR:SILICON,PNP | 80009 | 151-0188-00 |
| A4Q4284 | 151-0220-00 | | | TRANSISTOR:SILICON,PNP | 80009 | 151-0220-00 |
| A4Q4285 | 151-0216-00 | | | TRANSISTOR:SILICON,PNP | 80009 | 151-0216-00 |
| A4Q4291 | 151-0164-00 | | | TRANSISTOR:SILICON,PNP | 80009 | 151-0164-00 |
| A4Q4301 | ----- ----- | | | (SEE CHASSIS PARTS) | | |
| A4Q4302 | 151-0347-00 | | | TRANSISTOR:SILICON,NPN | 80009 | 151-0347-00 |
| A4Q4303 | 151-0347-00 | | | TRANSISTOR:SILICON,NPN | 80009 | 151-0347-00 |
| A4Q4311 | 151-0302-00 | | | TRANSISTOR:SILICON,NPN | 80009 | 151-0302-00 |
| A4Q4312 | ----- ----- | | | (SEE CHASSIS PARTS) | | |
| A4Q4341 | 151-0406-00 | | | TRANSISTOR:SILICON,PNP | 80009 | 151-0406-00 |
| A4Q4342 | 151-0407-00 | | | TRANSISTOR:SILICON,NPN | 80009 | 151-0407-00 |
| A4Q4361 | 151-0301-00 | | | TRANSISTOR:SILICON,PNP | 04713 | 2N2907A |
| A4Q4362 | 151-0188-00 | | | TRANSISTOR:SILICON,PNP | 80009 | 151-0188-00 |
| A4Q4398 | 151-0190-00 | B010100 | B033189X | TRANSISTOR:SILICON,NPN | 80009 | 151-0190-00 |
| A4Q4401 | ----- ----- | | | (SEE CHASSIS PARTS) | | |
| A4Q4403 | 151-0302-00 | | | TRANSISTOR:SILICON,NPN | 80009 | 151-0302-00 |
| A4Q4404 | 151-0302-00 | | | TRANSISTOR:SILICON,NPN | 80009 | 151-0302-00 |
| A4Q4425 | 151-0311-01 | | | TRANSISTOR:SILICON,NPN | 80009 | 151-0311-01 |
| A4Q4431 | 151-0347-00 | | | TRANSISTOR:SILICON,NPN | 80009 | 151-0347-00 |
| A4Q4465 | 151-0188-00 | | | TRANSISTOR:SILICON,PNP | 80009 | 151-0188-00 |
| A4Q4475 | 151-0188-00 | | | TRANSISTOR:SILICON,PNP | 80009 | 151-0188-00 |
| A4Q4481 | 151-0190-00 | | | TRANSISTOR:SILICON,NPN | 80009 | 151-0190-00 |
| A4Q4482 | 151-0190-00 | | | TRANSISTOR:SILICON,NPN | 80009 | 151-0190-00 |
| A4Q4491 | 151-0190-00 | | | TRANSISTOR:SILICON,NPN | 80009 | 151-0190-00 |
| A4Q4492 | 151-0190-00 | | | TRANSISTOR:SILICON,NPN | 80009 | 151-0190-00 |
| A4Q4497 | 151-0283-00 | | | TRANSISTOR:SILICON,NPN | 07263 | S032790 |
| A4Q4498 | 151-1025-00 | | | TRANSISTOR:SILICON,JFE,N-CHANNEL | 80009 | 151-1025-00 |
| A4Q4545 | 151-0188-00 | | | TRANSISTOR:SILICON,PNP | 80009 | 151-0188-00 |
| A4Q4554 | 151-0220-00 | | | TRANSISTOR:SILICON,PNP | 80009 | 151-0220-00 |
| A4Q4562 | 151-0220-00 | | | TRANSISTOR:SILICON,PNP | 80009 | 151-0220-00 |
| A4Q4563 | 151-0188-00 | | | TRANSISTOR:SILICON,PNP | 80009 | 151-0188-00 |
| A4Q4564 | 151-0188-00 | | | TRANSISTOR:SILICON,PNP | 80009 | 151-0188-00 |
| A4Q4565 | 151-0283-00 | | | TRANSISTOR:SILICON,NPN | 07263 | S032790 |
| A4Q4566 | 151-1025-00 | | | TRANSISTOR:SILICON,JFE,N-CHANNEL | 80009 | 151-1025-00 |
| A4Q4570 | 151-0127-00 | | | TRANSISTOR:SILICON,NPN | 80009 | 151-0127-00 |

| Component No. | Tektronix Part No. | Serial/Model No. Eff | Dscont | Name & Description | Mfr Code | Mfr Part Number |
|---|---|---|---|---|---|---|
| A4Q4581 | 151-0220-00 | | | TRANSISTOR:SILICON,PNP | 80009 | 151-0220-00 |
| A4Q4582 | 151-0220-00 | | | TRANSISTOR:SILICON,PNP | 80009 | 151-0220-00 |
| A4Q4588 | 151-0354-00 | | | TRANSISTOR:SILICON,PNP,DUAL | 32293 | ITS1200A |
| A4Q4598 | 151-0127-00 | | | TRANSISTOR:SILICON,NPN | 80009 | 151-0127-00 |
| A4R4001 | 315-0103-00 | | | RES.,FXD,CMPSN:10K OHM,5%,0.25W | 01121 | CB1035 |
| A4R4002 | 315-0472-00 | | | RES.,FXD,CMPSN:4.7K OHM,5%,0.25W | 01121 | CB4725 |
| A4R4003 | 315-0392-00 | | | RES.,FXD,CMPSN:3.9K OHM,5%,0.25W | 01121 | CB3925 |
| A4R4004 | 321-0327-00 | | | RES.,FXD,FILM:24.9K OHM,1%,0.125W | 91637 | MFF1816G24901F |
| A4R4005 | 321-0329-00 | | | RES.,FXD,FILM:26.1K OHM,1%,0.125W | 91637 | MFF1816G26101F |
| A4R4006 | 315-0106-00 | | | RES.,FXD,CMPSN:10M OHM,5%,0.25W | 01121 | CB1065 |
| A4R4008 | 315-0182-00 | | | RES.,FXD,CMPSN:1.8K OHM,5%,0.25W | 01121 | CB1825 |
| A4R4013 | 315-0104-00 | | | RES.,FXD,CMPSN:100K OHM,5%,0.25W | 01121 | CB1045 |
| A4R4041 | 315-0101-00 | | | RES.,FXD,CMPSN:100 OHM,5%,0.25W | 01121 | CB1015 |
| A4R4042 | 315-0223-00 | | | RES.,FXD,CMPSN:22K OHM,5%,0.25W | 01121 | CB2235 |
| A4R4048 | 315-0183-00 | | | RES.,FXD,CMPSN:18K OHM,5%,0.25W | 01121 | CB1835 |
| A4R4059 | 311-1538-00 | | | RES.,VAR,NONWIR:5K OHM X 2.5M OHM,10% | 01121 | 11M518 |
| A4R4069 | 311-1555-00 | | | RES.,VAR,NONWIR:100K OHM,20%,0.5W | 73138 | 91-77-0 |
| A4R4072 | 311-1560-00 | | | RES.,VAR,NONWIR:5K OHM,5%,0.50W | 73138 | 91A R5K |
| A4R4075 | 315-0302-00 | | | RES.,FXD,CMPSN:3K OHM,5%,0.25W | 01121 | CB3025 |
| A4R4107 | 315-0471-00 | | | RES.,FXD,CMPSN:470 OHM,5%,0.25W | 01121 | CB4715 |
| A4R4108 | 315-0103-00 | | | RES.,FXD,CMPSN:10K OHM,5%,0.25W | 01121 | CB1035 |
| A4R4109 | 311-1557-00 | | | RES.,VAR,NONWIR:25K OHM,20%,0.50W | 73138 | 91A R24K |
| A4R4110 | 315-0471-00 | | | RES.,FXD,CMPSN:470 OHM,5%,0.25W | 01121 | CB4715 |
| A4R4111 | 315-0102-03 | | | RES.,FXD,CMPSN:1K OHM,5%,0.25W | 01121 | CB1025 |
| A4R4112 | 315-0394-00 | | | RES.,FXD,CMPSN:390K OHM,5%,0.25W | 01121 | CB3945 |
| A4R4113 | 315-0102-03 | | | RES.,FXD,CMPSN:1K OHM,5%,0.25W | 01121 | CB1025 |
| A4R4114 | 315-0911-00 | | | RES.,FXD,CMPSN:910 OHM,5%,0.25W | 01121 | CB9115 |
| A4R4119 | 315-0221-03 | | | RES.,FXD,CMPSN:220 OHM,5%,0.25W | 01121 | CB2215 |
| A4R4124 | 315-0226-00 | | | RES.,FXD,CMPSN:22M OHM,5%,0.25W | 01121 | CB2265 |
| A4R4123 | 315-0103-03 | | | RES.,FXD,CMPSN:10K OHM,5%,0.25W | 01121 | CB1035 |
| A4R4126 | 315-0103-03 | | | RES.,FXD,CMPSN:10K OHM,5%,0.25W | 01121 | CB1035 |
| A4R4127 | 307-0290-04 | | | RES.,FXD,FILM: | 80009 | 307-0290-04 |
| A4R4128 | 315-0103-03 | | | RES.,FXD,CMPSN:10K OHM,5%,0.25W | 01121 | CB1035 |
| A4R4132 | 311-0075-00 | | | RES.,VAR,NONWIR:5M OHM,20% | 12697 | 381-CM16993 |
| A4R4142 | 315-0470-00 | | | RES.,FXD,CMPSN:47 OHM,5%,0.25W | 01121 | CB4705 |
| A4R4144 | 315-0102-00 | | | RES.,FXD,CMPSN:1K OHM,5%,0.25W | 01121 | CB1025 |
| A4R4145 | 321-0189-00 | | | RES.,FXD,FILM:909 OHM,1%,0.125W | 91637 | MFF1816G909R0F |
| A4R4146 | 301-0393-00 | | | RES.,FXD,CMPSN:39K OHM,5%,0.50W | 01121 | EB3935 |
| A4R4158 | 315-0475-00 | | | RES.,FXD,CMPSN:4.7M OHM,5%,0.25W | 01121 | CB4755 |
| A4R4161 | 315-0681-00 | | | RES.,FXD,CMPSN:680 OHM,5%,0.25W | 01121 | CB6815 |
| A4R4163 | 315-0182-00 | | | RES.,FXD,CMPSN:1.8K OHM,5%,0.25W | 01121 | CB1825 |
| A4R4165 | 315-0330-00 | | | RES.,FXD,CMPSN:33 OHM,(NOM VALUE),SEL | 01121 | CB3305 |
| A4R4167 | 321-0247-00 | B010100 | B011249 | RES.,FXD,FILM:3.65K OHM,1%,0.125W | 91637 | MFF1816G36500F |
| A4R4167 | 321-0245-00 | B011250 | | RES.,FXD,FILM:3.48K OHM,1%,0.125W | 91637 | MFF1816G34800F |
| A4R4169 | 315-0221-00 | | | RES.,FXD,CMPSN:220 OHM,5%,0.25W | 01121 | CB2215 |
| A4R4172 | 321-0287-00 | | | RES.,FXD,FILM:9.53K OHM,1%,0.125W | 91637 | MFF1816G95300F |
| A4R4173 | 321-0138-00 | | | RES.,FXD,FILM:267 OHM,1%,0.125W | 91637 | MFF1816G267R0F |
| A4R4174 | 321-0138-00 | | | RES.,FXD,FILM:267 OHM,1%,0.125W | 91637 | MFF1816G267R0F |
| A4R4175 | 315-0621-00 | | | RES.,FXD,CMPSN:620 OHM,5%,0.25W | 01121 | CB6215 |
| A4R4178 | 311-1372-00 | | | RES.,VAR,NONWIR:100K OHM,20%,1W | 01121 | 73M1G040L104M |
| A4R4179 | 311-1313-00 | | | RES.,VAR,NONWIR:2K OHM,20%,1W | 01121 | 73M4G048L202M |
| A4R4184 | 315-0822-00 | | | RES.,FXD,CMPSN:8.2K OHM,5%,0.25W | 01121 | CB8225 |
| A4R4185 | 315-0912-00 | | | RES.,FXD,CMPSN:9.1K OHM,5%,0.25W | 01121 | CB9125 |
| A4R4186 | 315-0473-00 | | | RES.,FXD,CMPSN:47K OHM,5%,0.25W | 01121 | CB4735 |
| A4R4191 | 315-0513-00 | | | RES.,FXD,CMPSN:51K OHM,5%,0.25W | 01121 | CB5135 |

| Component No. | Tektronix Part No. | Serial/Model No. Eff | Dscont | Name & Description | Mfr Code | Mfr Part Number |
|---|---|---|---|---|---|---|
| A4R4193 | 315-0302-00 | | | RES.,FXD,CMPSN:3K OHM,5%,0.25W | 01121 | CB3025 |
| A4R4195 | 311-1373-00 | | | RES.,VAR,NONWIR:5K OHM,20%,1W | 01121 | 73U4G040L502M |
| A4R4202 | 308-0459-00 | | | RES.,FXD,WW:1.1 OHM,5%,3W | 91637 | RS2B-D1R100J |
| A4R4204 | 315-0242-00 | | | RES.,FXD,CMPSN:2.4K OHM,5%,0.25W | 01121 | CB2425 |
| A4R4205 | 321-0274-00 | | | RES.,FXD,FILM:6.98K OHM,1%,0.125W | 91637 | MFF1816G69800F |
| A4R4206 | 321-0775-03 | | | RES.,FXD,FILM:45K OHM,0.25%,0.125W | 91637 | MFF1816D45001C |
| A4R4207 | 321-0774-03 | | | RES.,FXD,FILM:4.5K OHM,0.25%,0.125W | 91637 | MFF1816D45000C |
| A4R4208 | 315-0563-00 | | | RES.,FXD,CMPSN:56K OHM,5%,0.25W | 01121 | CB5635 |
| A4R4213 | 315-0332-00 | | | RES.,FXD,CMPSN:3.3K OHM,5%,0.25W | 01121 | CB3325 |
| A4R4216 | 315-0273-00 | | | RES.,FXD,CMPSN:27K OHM,5%,0.25W | 01121 | CB2735 |
| A4R4217 | 302-0393-00 | | | RES.,FXD,CMPSN:39K OHM,10%,0.50W | 01121 | EB3931 |
| A4R4218 | 323-0322-00 | | | RES.,FXD,FILM:22.1K OHM,1%,0.50W | 75042 | CECT0-2212F |
| A4R4219 | 315-0102-00 | | | RES.,FXD,CMPSN:1K OHM,5%,0.25W | 01121 | CB1025 |
| A4R4220 | 315-0391-00 | | | RES.,FXD,CMPSN:390 OHM,5%,0.25W | 01121 | CB3915 |
| A4R4221 | 321-0249-00 | | | RES.,FXD,FILM:3.83K OHM,1%,0.125W | 91637 | MFF1816G38300F |
| A4R4224 | 321-0168-00 | | | RES.,FXD,FILM:549 OHM,1%,0.125W | 91637 | MFF1816G549R0F |
| A4R4225 | 315-0201-00 | | | RES.,FXD,CMPSN:200 OHM,5%,0.25W | 01121 | CB2015 |
| A4R4226 | 315-0475-00 | | | RES.,FXD,CMPSN:4.7M OHM,5%,0.25W | 01121 | CB4755 |
| A4R4227 | 315-0221-00 | | | RES.,FXD,CMPSN:220 OHM,5%,0.25W | 01121 | CB2215 |
| A4R4228 | 315-0103-00 | | | RES.,FXD,CMPSN:10K OHM,5%,0.25W | 01121 | CB1035 |
| A4R4230 | 315-0242-00 | | | RES.,FXD,CMPSN:2.4K OHM,5%,0.25W | 01121 | CB2425 |
| A4R4231 | 315-0102-00 | | | RES.,FXD,CMPSN:1K OHM,5%,0.25W | 01121 | CB1025 |
| A4R4235 | 315-0683-00 | | | RES.,FXD,CMPSN:68K OHM,5%,0.25W | 01121 | CB6835 |
| A4R4242 | 315-0101-00 | | | RES.,FXD,CMPSN:100 OHM,5%,0.25W | 01121 | CB1015 |
| A4R4244 | 322-0289-00 | | | RES.,FXD,FILM:10K OHM,1%,0.25W | 75042 | CEBT0-1002F |
| A4R4245 | 315-0101-00 | | | RES.,FXD,CMPSN:100 OHM,5%,0.25W | 01121 | CB1015 |
| A4R4250 | 322-0289-00 | | | RES.,FXD,FILM:10K OHM,1%,0.25W | 75042 | CEBT0-1002F |
| A4R4253 | 311-1556-00 | XB011250 | | RES.,VAR,NONWIR:50K OHM,20%,0.50W | 73138 | 91A R50K |
| A4R4254 | 322-0289-00 | | | RES.,FXD,FILM:10K OHM,1%,0.25W | 75042 | CEBT0-1002F |
| A4R4260 | 315-0622-00 | B010100 | B011249 | RES.,FXD,CMPSN:6.2K OHM,(NOM VALUE),SEL | 01121 | CB6225 |
| A4R4260 | 315-0223-00 | B011250 | | RES.,FXD,CMPSN:22K OHM,5%,0.25W | 01121 | CB2235 |
| A4R4262 | 315-0562-00 | B010100 | B011249 | RES.,FXD,CMPSN:5.6K OHM,(NOM VALUE),SEL | 01121 | CB5625 |
| A4R4262 | 321-0223-00 | B011250 | | RES.,FXD,FILM:2.05K OHM,1%,0.125W | 91637 | MFF1816G20500F |
| A4R4263 | 301-0181-00 | | | RES.,FXD,CMPSN:180 OHM,5%,0.50W | 01121 | EB1815 |
| A4R4265 | 321-0142-00 | | | RES.,FXD,FILM:294 OHM,1%,0.125W | 91637 | MFF1816G294R0F |
| A4R4266 | 321-0126-00 | | | RES.,FXD,FILM:200 OHM,1%,0.125W | 91637 | MFF1816G200R0F |
| A4R4267 | 321-0126-00 | | | RES.,FXD,FILM:200 OHM,1%,0.125W | 91637 | MFF1816G200R0F |
| A4R4268 | 321-0300-00 | | | RES.,FXD,FILM:13K OHM,(NOM VALUE),SEL | 91637 | MFF1816G13001F |
| A4R4270 | 321-0206-00 | | | RES.,FXD,FILM:1.37K OHM,1%,0.125W | 91637 | MFF1816G13700F |
| A4R4272 | 315-0621-00 | | | RES.,FXD,CMPSN:620 OHM,5%,0.25W | 01121 | CB6215 |
| A4R4273 | 323-0289-00 | | | RES.,FXD,FILM:10K OHM,1%,0.50W | 75042 | CECT0-1002F |
| A4R4274 | 311-1563-00 | | | RES.,VAR,NONWIR:1K OHM,20%,0.50W | 73138 | 91A R1K |
| A4R4275 | 311-1561-00 | | | RES.,VAR,NONWIR:2.5K OHM,20%,0.50W | 73138 | 91A R2500 |
| A4R4276 | 321-0210-00 | | | RES.,FXD,FILM:1.5K OHM,1%,0.125W | 91637 | MFF1816G15000F |
| A4R4277 | 323-0289-00 | | | RES.,FXD,FILM:10K OHM,1%,0.50W | 75042 | CECT0-1002F |
| A4R4279 | 321-0110-00 | | | RES.,FXD,FILM:137 OHM,1%,0.125W | 91637 | MFF1816G137R0F |
| A4R4280 | 321-0205-00 | | | RES.,FXD,FILM:1.33K OHM,1%,0.125W | 91637 | MFF1816G13300F |
| A4R4281 | 321-0164-00 | | | RES.,FXD,FILM:499 OHM,1%,0.125W | 91637 | MFF1816G499R0F |
| A4R4282 | 321-0248-00 | B010100 | B022259 | RES.,FXD,FILM:3.74K OHM,1%,0.125W | 91637 | MFF1816G37400F |
| A4R4282 | 321-0253-00 | B022260 | | RES.,FXD,FILM:4.22K OHM,1%,0.125W | 91637 | MFF1816G42200F |
| A4R4283 | 315-0472-00 | | | RES.,FXD,CMPSN:4.7K OHM,5%,0.25W | 01121 | CB4725 |
| A4R4284 | 315-0333-00 | | | RES.,FXD,CMPSN:33K OHM,5%,0.25W | 01121 | CB3335 |
| A4R4285 | 321-0174-00 | | | RES.,FXD,FILM:634 OHM,1%,0.125W | 91637 | MFF1816G634R0F |
| A4R4286 | 315-0471-00 | | | RES.,FXD,CMPSN:470 OHM,5%,0.25W | 01121 | CB4715 |
| A4R4287 | 315-0152-00 | | | RES.,FXD,CMPSN:1.5K OHM,5%,0.25W | 01121 | CB1525 |

| Component No. | Tektronix Part No. | Serial/Model No. Eff | Dscont | Name & Description | Mfr Code | Mfr Part Number |
|---|---|---|---|---|---|---|
| A4R4288 | 315-0202-00 | | | RES.,FXD,CMPSN:2K OHM,5%,0.25W | 01121 | CB2025 |
| A4R4289 | 315-0203-00 | | | RES.,FXD,CMPSN:20K OHM,5%,0.25W | 01121 | CB2035 |
| A4R4291 | 315-0512-00 | | | RES.,FXD,CMPSN:5.1K OHM,5%,0.25W | 01121 | C35125 |
| A4R4293 | 311-1568-00 | | | RES.,VAR,NONWIR:50 OHM,20%,0.50W | 73138 | 91A R50 |
| A4R4294 | 321-0107-00 | | | RES.,FXD,FILM:127 OHM,1%,0.125W | 91637 | MFF1816G127R0F |
| A4R4295 | 321-0001-00 | | | RES.,FXD,FILM:10 OHM,1%,0.125W | 75042 | CEAT0-10R00F |
| A4R4302 | 315-0122-00 | | | RES.,FXD,CMPSN:1.2K OHM,5%,0.25W | 01121 | CB1225 |
| A4R4303 | 307-0052-00 | | | RES.,FXD,CMPSN:3 OHM,5%,0.50W | 01121 | EB30G5 |
| A4R4305 | 321-0366-00 | | | RES.,FXD,FILM:63.4K OHM,1%,0.125W | 91637 | MFF1816G63401F |
| A4R4306 | 315-0102-00 | | | RES.,FXD,CMPSN:1K OHM,5%,0.25W | 01121 | CB1025 |
| A4R4311 | 321-0962-03 | | | RES.,FXD,FILM:8K OHM,0.25%,0.125W | 91637 | MFF1816D80000C |
| A4R4312 | 321-0967-03 | | | RES.,FXD,FILM:55K OHM,0.25%,0.125W | 91637 | MFF1816D55001C |
| A4R4313 | 315-0101-00 | | | RES.,FXD,CMPSN:100 OHM,5%,0.25W | 01121 | CB1015 |
| A4R4314 | 321-0201-00 | | | RES.,FXD,FILM:1.21K OHM,1%,0.125W | 91637 | MFF1816G12100F |
| A4R4315 | 315-0512-00 | | | RES.,FXD,CMPSN:5.1K OHM,5%,0.25W | 01121 | CB5125 |
| A4R4316 | 315-0183-00 | | | RES.,FXD,CMPSN:18K OHM,5%,0.25W | 01121 | CB1835 |
| A4R4318 | 311-1226-00 | | | RES.,VAR,NONWIR:2.5K OHM,20%,0.50W | 32997 | 3386F-T04-252 |
| A4R4319 | 321-0292-00 | | | RES.,FXD,FILM:10.7K OHM,1%,0.125W | 91637 | MFF1816G10701F |
| A4R4321 | 321-0307-00 | | | RES.,FXD,FILM:15.4K OHM,1%,0.125W | 91637 | MFF1816G15401F |
| A4R4322 | 321-0220-00 | | | RES.,FXD,FILM:1.91K OHM,1%,0.125W | 91637 | MFF1816G19100F |
| A4R4323 | 301-0243-00 | | | RES.,FXD,CMPSN:24K OHM,5%,0.50W | 01121 | EB2435 |
| A4R4324 | 315-0242-00 | | | RES.,FXD,CMPSN:2.4K OHM,5%,0.25W | 01121 | CB2425 |
| A4R4325 | 307-0093-00 | | | RES.,FXD,CMPSN:1.2 OHM,5%,0.50W | 01121 | EB12G5 |
| A4R4326 | 303-0223-00 | | | RES.,FXD,CMPSN:22K OHM,5%,1W | 01121 | GB2235 |
| A4R4327 | 315-0153-00 | | | RES.,FXD,CMPSN:15K OHM,5%,0.25W | 01121 | CB1535 |
| A4R4331 | 315-0273-00 | | | RES.,FXD,CMPSN:27K OHM,5%,0.25W | 01121 | CB2735 |
| A4R4332 | 315-0224-00 | | | RES.,FXD,CMPSN:220K OHM,5%,0.25W | 01121 | CB2245 |
| A4R4341 | 322-0289-00 | | | RES.,FXD,FILM:10K OHM,1%,0.25W | 75042 | CEBT0-1002F |
| A4R4342 | 301-0393-00 | | | RES.,FXD,CMPSN:39K OHM,5%,0.50W | 01121 | EB3935 |
| A4R4343 | 315-0470-00 | | | RES.,FXD,CMPSN:47 OHM,5%,0.25W | 01121 | CB4705 |
| A4R4344 | 302-0273-00 | | | RES.,FXD,CMPSN:27K OHM,10%,0.50W | 01121 | EB2731 |
| A4R4345 | 321-0268-00 | | | RES.,FXD,FILM:6.04K OHM,1%,0.125W | 91637 | MFF1816G60400F |
| A4R4346 | 321-0189-00 | | | RES.,FXD,FILM:909 OHM,1%,0.125W | 91637 | MFF1816G909R0F |
| A4R4347 | 321-0034-00 | | | RES.,FXD,FILM:22.1 OHM,1%,0.125W | 91637 | MFF1816G22R10F |
| A4R4351 | 315-0273-00 | | | RES.,FXD,CMPSN:27K OHM,5%,0.25W | 01121 | CB2735 |
| A4R4352 | 321-0222-00 | | | RES.,FXD,FILM:2K OHM,1%,0.125W | 91637 | MFF1816G20000F |
| A4R4360 | 321-0142-00 | | | RES.,FXD,FILM:294 OHM,1%,0.125W | 91637 | MFF1816G294R0F |
| A4R4361 | 321-0247-00 | B010100 | B011249 | RES.,FXD,FILM:3.65K OHM,1%,0.125W | 91637 | MFF1816G36500F |
| A4R4361 | 321-0245-00 | B011250 | | RES.,FXD,FILM:3.48K OHM,1%,0.125W | 91637 | MFF1816G34800F |
| A4R4362 | 315-0391-00 | | | RES.,FXD,CMPSN:390 OHM,5%,0.25W | 01121 | CB3915 |
| A4R4363 | 315-0121-00 | | | RES.,FXD,CMPSN:120 OHM,(NOM VALUE),SEL | 01121 | CB1215 |
| A4R4364 | 315-0102-00 | | | RES.,FXD,CMPSN:1K OHM,5%,0.25W | 01121 | CB1025 |
| A4R4365 | 321-0222-00 | | | RES.,FXD,FILM:2K OHM,1%,0.125W | 91637 | MFF1816G20000F |
| A4R4366 | 321-0173-00 | | | RES.,FXD,FILM:619 OHM,1%,0.125W | 91637 | MFF1816G619R0F |
| A4R4367 | 321-0184-00 | | | RES.,FXD,FILM:806 OHM,1%,0.125W | 91637 | MFF1816G806R0F |
| A4R4368 | 323-0248-00 | | | RES.,FXD,FILM:3.74K OHM,1%,0.50W | 75042 | CECT0-3741F |
| A4R4369 | 323-0248-00 | | | RES.,FXD,FILM:3.74K OHM,1%,0.50W | 75042 | CECT0-3741F |
| A4R4371 | 321-0184-00 | | | RES.,FXD,FILM:806 OHM,1%,0.125W | 91637 | MFF1816G806R0F |
| A4R4372 | 321-0173-00 | | | RES.,FXD,FILM:619 OHM,1%,0.125W | 91637 | MFF1816G619R0F |
| A4R4373 | 311-1567-00 | | | RES.,VAR,NONWIR:TRMR,100 OHM,0.50W | 73138 | 91-89-0 |
| A4R4374 | 315-0270-00 | | | RES.,FXD,CMPSN:27 OHM,5%,0.25W | 01121 | CB2705 |
| A4R4375 | 315-0331-00 | | | RES.,FXD,CMPSN:330 OHM,5%,0.25W | 01121 | CB3315 |
| A4R4376 | 323-0191-00 | | | RES.,FXD,FILM:953 OHM,1%,0.50W | 75042 | CECT0-9530F |
| A4R4381 | 311-1567-00 | | | RES.,VAR,NONWIR:TRMR,100 OHM,0.50W | 73138 | 91-89-0 |
| A4R4382 | 321-0193-00 | | | RES.,FXD,FILM:1K OHM,1%,0.125W | 91637 | MFF1816G10000F |

| Component No. | Tektronix Part No. | Serial/Model No. Eff | Dscont | Name & Description | Mfr Code | Mfr Part Number |
|---|---|---|---|---|---|---|
| A4R4383 | 321-0147-00 | | | RES.,FXD,FILM:332 OHM,1%,0.125W | 91637 | MFF1816G332R0F |
| A4R4384 | 321-0116-00 | | | RES.,FXD,FILM:158 OHM,1%,0.125W | 91637 | MFF1816G158R0F |
| A4R4392 | 315-0512-00 | | | RES.,FXD,CMPSN:5.1K OHM,5%,0.25W | 01121 | CB5125 |
| A4R4393 | 315-0472-00 | B010100 | B033189X | RES.,FXD,CMPSN:4.7K OHM,5%,0.25W | 01121 | CB4725 |
| A4R4394 | 315-0122-00 | | | RES.,FXD,CMPSN:1.2K OHM,5%,0.25W | 01121 | CB1225 |
| A4R4395 | 315-0821-00 | | | RES.,FXD,CMPSN:820 OHM,5%,0.25W | 01121 | CB8215 |
| A4R4396 | 315-0122-00 | | | RES.,FXD,CMPSN:1.2K OHM,5%,0.25W | 01121 | CB1225 |
| A4R4397 | 315-0102-00 | | | RES.,FXD,CMPSN:1K OHM,5%,0.25W | 01121 | CB1025 |
| A4R4403 | 308-0459-00 | | | RES.,FXD,WW:1.1 OHM,5%,3W | 91637 | RS2B-D1R100J |
| A4R4404 | 315-0102-00 | | | RES.,FXD,CMPSN:1K OHM,5%,0.25W | 01121 | CB1025 |
| A4R4405 | 315-0153-00 | | | RES.,FXD,CMPSN:15K OHM,5%,0.25W | 01121 | CB1535 |
| A4R4406 | 321-0296-00 | | | RES.,FXD,FILM:11.8K OHM,1%,0.125W | 91637 | MFF1816G11801F |
| A4R4407 | 321-0603-00 | | | RES.,FXD,FILM:15K OHM,0.25%,0.125W | 91637 | MFF1816D15001C |
| A4R4411 | 321-0966-03 | | | RES.,FXD,FILM:40K OHM,0.25%,0.125W | 91637 | MFF1816D40001C |
| A4R4412 | 303-0472-00 | | | RES.,FXD,CMPSN:4.7K OHM,5%,1W | 01121 | GB4725 |
| A4R4421 | 323-0269-00 | | | RES.,FXD,FILM:6.19K OHM,1%,0.50W | 75042 | CECT0-6191F |
| A4R4422 | 308-0644-00 | | | RES.,FXD,WW:25 OHM,1%,5W | 91637 | RS5111-25R00F |
| A4R4432 | 315-0200-02 | | | RES.,FXD,CMPSN:20 OHM,5%,0.25W | 01121 | CB2005 |
| A4R4433 | 315-0101-00 | | | RES.,FXD,CMPSN:100 OHM,5%,0.25W | 01121 | CB1015 |
| A4R4434 | 303-0203-00 | | | RES.,FXD,CMPSN:20K OHM,5%,1W | 01121 | GB2035 |
| A4R4441 | 315-0302-00 | | | RES.,FXD,CMPSN:3K OHM,5%,0.25W | 01121 | CB3025 |
| A4R4451 | 315-0101-00 | | | RES.,FXD,CMPSN:100 OHM,5%,0.25W | 01121 | CB1015 |
| A4R4461 | 321-0229-00 | | | RES.,FXD,FILM:2.37K OHM,1%,0.125W | 91637 | MFF1816G23700F |
| A4R4462 | 321-0251-01 | | | RES.,FXD,FILM:4.02K OHM,0.5%,0.125W | 91637 | MFF1816G40200D |
| A4R4466 | 321-0418-00 | | | RES.,FXD,FILM:221K OHM,1%,0.125W | 91637 | MFF1816G22102F |
| A4R4467 | 315-0822-00 | | | RES.,FXD,CMPSN:8.2K OHM,5%,0.25W | 01121 | CB8225 |
| A4R4469 | 315-0101-00 | | | RES.,FXD,CMPSN:100 OHM,5%,0.25W | 01121 | CB1015 |
| A4R4471 | 321-0463-00 | | | RES.,FXD,FILM:649K OHM,1%,0.125W | 91637 | MFF1816G64902F |
| A4R4472 | 315-0822-00 | | | RES.,FXD,CMPSN:8.2K OHM,5%,0.25W | 01121 | CB8225 |
| A4R4473 | 315-0221-00 | | | RES.,FXD,CMPSN:220 OHM,5%,0.25W | 01121 | CB2215 |
| A4R4474 | 321-0228-00 | | | RES.,FXD,FILM:2.32K OHM,1%,0.125W | 91637 | MFF1816G23200F |
| A4R4475 | 321-0251-01 | | | RES.,FXD,FILM:4.02K OHM,0.5%,0.125W | 91637 | MFF1816G40200D |
| A4R4476 | 315-0184-00 | | | RES.,FXD,CMPSN:180K OHM,5%,0.25W | 01121 | CB1845 |
| A4R4477 | 315-0470-00 | | | RES.,FXD,CMPSN:47 OHM,5%,0.25W | 01121 | CB4705 |
| A4R4479 | 315-0470-00 | | | RES.,FXD,CMPSN:47 OHM,5%,0.25W | 01121 | CB4705 |
| A4R4482 | 315-0512-02 | | | RES.,FXD,CMPSN:5.1K OHM,5%,0.25W | 01121 | CB5125 |
| A4R4483 | 315-0512-02 | | | RES.,FXD,CMPSN:5.1K OHM,5%,0.25W | 01121 | CB5125 |
| A4R4484 | 315-0512-02 | | | RES.,FXD,CMPSN:5.1K OHM,5%,0.25W | 01121 | CB5125 |
| A4R4485 | 315-0222-00 | | | RES.,FXD,CMPSN:2.2K OHM,5%,0.25W | 01121 | CB2225 |
| A4R4486 | 315-0512-00 | | | RES.,FXD,CMPSN:5.1K OHM,5%,0.25W | 01121 | CB5125 |
| A4R4487 | 315-0222-00 | | | RES.,FXD,CMPSN:2.2K OHM,5%,0.25W | 01121 | CB2225 |
| A4R4488 | 315-0512-00 | | | RES.,FXD,CMPSN:5.1K OHM,5%,0.25W | 01121 | CB5125 |
| A4R4491 | 315-0122-00 | | | RES.,FXD,CMPSN:1.2K OHM,5%,0.25W | 01121 | CB1225 |
| A4R4492 | 315-0821-00 | | | RES.,FXD,CMPSN:820 OHM,5%,0.25W | 01121 | CB8215 |
| A4R4493 | 315-0122-00 | | | RES.,FXD,CMPSN:1.2K OHM,5%,0.25W | 01121 | CB1225 |
| A4R4494 | 315-0821-00 | | | RES.,FXD,CMPSN:820 OHM,5%,0.25W | 01121 | CB8215 |
| A4R4495 | 315-0102-00 | | | RES.,FXD,CMPSN:1K OHM,5%,0.25W | 01121 | CB1025 |
| A4R9996 | 315-0102-00 | | | RES.,FXD,CMPSN:1K OHM,5%,0.25W | 01121 | CB1025 |
| A4R4497 | 315-0101-00 | | | RES.,FXD,CMPSN:100 OHM,5%,0.25W | 01121 | CB1015 |
| A4R4498 | 315-0470-00 | | | RES.,FXD,CMPSN:47 OHM,5%,0.25W | 01121 | CB4705 |
| A4R4526 | 308-0363-00 | | | RES.,FXD,WW:3K OHM,5%,8W | 91637 | RS8-B30000J |
| A4R4527 | 315-0103-00 | | | RES.,FXD,CMPSN:10K OHM,5%,0.25W | 01121 | CB1035 |
| A4R4531 | 315-0103-00 | | | RES.,FXD,CMPSN:10K OHM,5%,0.25W | 01121 | CB1035 |
| A4R4545 | 301-0432-00 | | | RES.,FXD,CMPSN:4.3K OHM,5%,0.50W | 01121 | EB4325 |
| A4R4546 | 321-0228-00 | | | RES.,FXD,FILM:2.32K OHM,1%,0.125W | 91637 | MFF1816G23200F |

| Component No. | Tektronix Part No. | Serial/Model No. Eff | Dscont | Name & Description | Mfr Code | Mfr Part Number |
|---|---|---|---|---|---|---|
| A4R4547 | 315-0103-00 | | | RES.,FXD,CMPSN:10K OHM,5%,0.25W | 01121 | CB1035 |
| A4R4548 | 321-0193-00 | | | RES.,FXD,FILM:1K OHM,1%,0.125W | 91637 | MFF1816G10000F |
| A4R4551 | 308-0421-00 | | | RES.,FXD,WW:3K OHM,5%,3W | 91637 | CW-2B B30000J |
| A4R4552 | 315-0360-00 | | | RES.,FXD,CMPSN:36 OHM,5%,0.25W | 01121 | CB3605 |
| A4R4553 | 321-0250-00 | | | RES.,FXD,FILM:3.92K OHM,1%,0.125W | 91637 | MFF1816G39200F |
| A4R4554 | 321-0195-00 | | | RES.,FXD,FILM:1.05K OHM,1%,0.125W | 91637 | MFF1816G10500F |
| A4R4561 | 315-0360-00 | | | RES.,FXD,CMPSN:36 OHM,5%,0.25W | 01121 | CB3605 |
| A4R4562 | 321-0193-00 | | | RES.,FXD,FILM:1K OHM,1%,0.125W | 91637 | MFF1816G10000F |
| A4R4563 | 321-0165-00 | | | RES.,FXD,FILM:511 OHM,1%,0.125W | 91637 | MFF1816G511R0F |
| A4R4564 | 315-0330-00 | | | RES.,FXD,CMPSN:33 OHM,5%,0.25W | 01121 | CB3305 |
| A4R4565 | 315-0101-00 | | | RES.,FXD,CMPSN:100 OHM,5%,0.25W | 01121 | CB1015 |
| A4R4566 | 321-0193-00 | | | RES.,FXD,FILM:1K OHM,1%,0.125W | 91637 | MFF1816G10000F |
| A4R4568 | 315-0330-00 | | | RES.,FXD,CMPSN:33 OHM,5%,0.25W | 01121 | CB3305 |
| A4R4570 | 311-1567-00 | | | RES.,VAR,NONWIR:TRMR,100 OHM,0.50W | 73138 | 91-89-0 |
| A4R4571 | 315-0101-00 | | | RES.,FXD,CMPSN:100 OHM,5%,0.25W | 01121 | CB1015 |
| A4R4572 | 321-0256-00 | | | RES.,FXD,FILM:4.53K OHM,1%,0.125W | 91637 | MFF1816G45300F |
| A4R4573 | 321-0154-00 | | | RES.,FXD,FILM:392 OHM,1%,0.125W | 91637 | MFF1816G392R0F |
| A4R4574 | 321-0231-00 | | | RES.,FXD,FILM:2.49K OHM,1%,0.125W | 91637 | MFF1816G24900F |
| A4R4575 | 315-0101-00 | | | RES.,FXD,CMPSN:100 OHM,5%,0.25W | 01121 | CB1015 |
| A4R4576 | 303-0432-00 | | | RES.,FXD,CMPSN:4.3K OHM,5%,1W | 01121 | GB4325 |
| A4R4577 | 315-0103-00 | | | RES.,FXD,CMPSN:10K OHM,5%,0.25W | 01121 | CB1035 |
| A4R4578 | 321-0228-00 | | | RES.,FXD,FILM:2.32K OHM,1%,0.125W | 91637 | MFF1816G23200F |
| A4R4579 | 321-0193-00 | | | RES.,FXD,FILM:1K OHM,1%,0.125W | 91637 | MFF1816G10000F |
| A4R4581 | 308-0421-00 | | | RES.,FXD,WW:3K OHM,5%,3W | 91637 | CW-2B B30000J |
| A4R4583 | 315-0360-00 | | | RES.,FXD,CMPSN:36 OHM,5%,0.25W | 01121 | CB3605 |
| A4R4584 | 321-0250-00 | | | RES.,FXD,FILM:3.92K OHM,1%,0.125W | 91637 | MFF1816G39200F |
| A4R4585 | 321-0195-00 | | | RES.,FXD,FILM:1.05K OHM,1%,0.125W | 91637 | MFF1816G10500F |
| A4R4586 | 321-0193-00 | | | RES.,FXD,FILM:1K OHM,1%,0.125W | 91637 | MFF1816G10000F |
| A4R4587 | 321-0165-00 | | | RES.,FXD,FILM:511 OHM,1%,0.125W | 91637 | MFF1816G511R0F |
| A4R4592 | 315-0360-00 | | | RES.,FXD,CMPSN:36 OHM,5%,0.25W | 01121 | CB3605 |
| A4R4593 | 315-0273-00 | | | RES.,FXD,CMPSN:27K OHM,5%,0.25W | 01121 | CB2735 |
| A4R4595 | 321-0256-00 | | | RES.,FXD,FILM:4.53K OHM,1%,0.125W | 91637 | MFF1816G45300F |
| A4R4596 | 315-0101-00 | | | RES.,FXD,CMPSN:100 OHM,5%,0.25W | 01121 | CB1015 |
| A4R4597 | 321-0193-00 | | | RES.,FXD,FILM:1K OHM,1%,0.125W | 91637 | MFF1816G10000F |
| A4R4598 | 315-0181-00 | | | RES.,FXD,CMPSN:180 OHM,5%,0.25W | 01121 | CB1815 |
| A4R4599 | 315-0101-00 | | | RES.,FXD,CMPSN:100 OHM,5%,0.25W | 01121 | CB1015 |
| A4RT4373 | 307-0122-00 | | | RES.,THERMAL:50 OHM,10% | 50157 | 3D1515 |
| A4S4075 | 260-1310-01 | | | SWITCH,PUSH:4PDT MOMENTARY,NON-SHORTING | 80009 | 260-1310-01 |
| A4S4371 | 260-1208-00 | | | SWITCH,PUSH:DPDT | 80009 | 260-1208-00 |
| A4T4015 | 120-0800-01 | | | XFMR,PWR,SDN&SU:MOLDED | 80009 | 120-0800-01 |
| A4U4032 | 152-0552-00 | | | SEMICOND DEVICE:V MULTR,5KV IN,15KV OUT | 80009 | 152-0552-00 |
| A4U4206 | 156-0158-00 | | | MICROCIRCUIT,LI:DUAL OPERATIONAL AMPLIFIER | 80009 | 156-0158-00 |
| A4U4269 | 156-0197-00 | | | MICROCIRCUIT,LI:5 TRANSISTOR ARRAY | 80009 | 156-0197-00 |
| A4U4391 | 156-0383-00 | | | MICROCIRCUIT,DI:QUAD 2-INPUT NOR GATE | 80009 | 156-0383-00 |
| A4U4411 | 156-0158-00 | | | MICROCIRCUIT,LI:DUAL OPERATIONAL AMPLIFIER | 80009 | 156-0158-00 |
| A4U4491 | 156-0388-00 | | | MICROCIRCUIT,DI:DUAL D-TYPE FLIP-FLOP | 80009 | 156-0388-00 |
| A4VR4007 | 152-0289-00 | | | SEMICOND DEVICE:ZENER,0.4W,180V,5% | 80009 | 152-0289-00 |
| A4VR4108 | 152-0286-00 | | | SEMICOND DEVICE:ZENER,0.4W,75V,5% | 80009 | 152-0286-00 |
| A4VR4194 | 152-0127-00 | | | SEMICOND DEVICE:ZENER,0.4W,7.5V,5% | 80009 | 152-0127-00 |
| A4VR4215 | 152-0166-00 | | | SEMICOND DEVICE:ZENER,0.4W,6.2V,5% | 80009 | 152-0166-00 |
| A4VR4304 | 152-0283-00 | | | SEMICOND DEVICE:ZENER,0.4W,43V,5% | 80009 | 152-0283-00 |
| A4VR4326 | 152-0304-00 | | | SEMICOND DEVICE:ZENER,0.4W,20V,5% | 80009 | 152-0304-00 |
| A4VR4341 | 152-0166-00 | | | SEMICOND DEVICE:ZENER,0.4W,6.2V,5% | 80009 | 152-0166-00 |
| A4VR4394 | 152-0306-00 | | | SEMICOND DEVICE:ZENER,0.4W,9.1V,5% | 80009 | 152-0306-00 |
| A4VR4408 | 152-0281-00 | | | SEMICOND DEVICE:ZENER,0.4W,22V,5% | 80009 | 152-0281-00 |

| Component No. | Tektronix Part No. | Serial/Model No. Eff | Dscont | Name & Description | Mfr Code | Mfr Part Number |
|---|---|---|---|---|---|---|
| A4VR4421 | 152-0411-00 | | | SEMICOND DEVICE:ZENER,0.25W,9V,5% | 04713 | 1N937 |
| A4VR4422 | 152-0268-00 | | | SEMICOND DEVICE:ZENER,0.4W,56V,5% | 80009 | 152-0268-00 |
| A4VR4495 | 152-0306-00 | | | SEMICOND DEVICE:ZENER,0.4W,9.1V,5% | 80009 | 152-0306-00 |
| A4VR4496 | 152-0306-00 | | | SEMICOND DEVICE:ZENER,0.4W,9.1V,5% | 80009 | 152-0306-00 |
| A4VR4497 | 152-0278-00 | | | SEMICOND DEVICE:ZENER,0.4W,3V,5% | 80009 | 152-0278-00 |
| A4W4032 | 131-0566-00 | | | LINK,TERM.CONNE:0.086 DIA X 2.375 INCH L | 55210 | L-2007-1 |
| A4W4183 | 131-0566-00 | | | LINK,TERM.CONNE:0.086 DIA X 2.375 INCH L | 55210 | L-2007-1 |
| A4W4259 | 131-0566-00 | | | LINK,TERM.CONNE:0.086 DIA X 2.375 INCH L | 55210 | L-2007-1 |
| A4W4348 | 131-0566-00 | | | LINK,TERM.CONNE:0.086 DIA X 2.375 INCH L | 55210 | L-2007-1 |
| A4W4440 | 131-0566-00 | | | LINK,TERM.CONNE:0.086 DIA X 2.375 INCH L | 55210 | L-2007-1 |
| A4W4468 | 131-0566-00 | | | LINK,TERM.CONNE:0.086 DIA X 2.375 INCH L | 55210 | L-2007-1 |
| A4W4544 | 131-0566-00 | | | LINK,TERM.CONNE:0.086 DIA X 2.375 INCH L | 55210 | L-2007-1 |
| A4W4481 | 131-0566-00 | | | LINK,TERM.CONNE:0.086 DIA X 2.375 INCH L | 55210 | L-2007-1 |
| A4W4483 | 131-0566-00 | | | LINK,TERM.CONNE:0.086 DIA X 2.375 INCH L | 55210 | L-2007-1 |

For Service Manuals Contact
MAURITRON TECHNICAL SERVICES
8 Cherry Tree Rd, Chinnor
Oxon OX9 4QY
Tel:- 01844-351694 Fax:- 01844-352554
Email:- enquiries@mauritron.co.uk

| Component No. | Tektronix Part No. | Serial/Model No. Eff | Dscont | Name & Description | Mfr Code | Mfr Part Number |
|---|---|---|---|---|---|---|
| A5 | ----- ----- | | | CKT BOARD ASSY:VERTICAL MODE SW | | |
| A5C5018 | 281-0773-00 | | | CAP.,FXD,CER DI:0.01UF,10%,100V | 72982 | 8005H9AADW5R103K |
| A5C5135 | 290-0246-00 | | | CAP.,FXD,ELCTLT:3.3UF,10%,15V | 56289 | 162D335X9015CD2 |
| A5C5145 | 290-0246-00 | | | CAP.,FXD,ELCTLT:3.3UF,10%,15V | 56289 | 162D335X9015CD2 |
| A5C5214 | 290-0804-00 | | | CAP.,FXD,ELCTLT:10UF,+50-10%,25V | 55680 | 25ULA10-T |
| A5C5235 | 290-0246-00 | | | CAP.,FXD,ELCTLT:3.3UF,10%,15V | 56289 | 162D335X9015CD2 |
| A5C5245 | 290-0246-00 | | | CAP.,FXD,ELCTLT:3.3UF,10%,15V | 56289 | 162D335X9015CD2 |
| A5CR5115 | 152-0141-02 | | | SEMICOND DEVICE:SILICON,30V,50NA | 80009 | 152-0141-02 |
| A5CR5116 | 152-0141-02 | | | SEMICOND DEVICE:SILICON,30V,50NA | 80009 | 152-0141-02 |
| A5CR5118 | 152-0141-02 | | | SEMICOND DEVICE:SILICON,30V,50NA | 80009 | 152-0141-02 |
| A5CR5211 | 152-0141-02 | | | SEMICOND DEVICE:SILICON,30V,50NA | 80009 | 152-0141-02 |
| A5CR5214 | 152-0141-02 | | | SEMICOND DEVICE:SILICON,30V,50NA | 80009 | 152-0141-02 |
| A5Q5017 | 151-0301-00 | | | TRANSISTOR:SILICON,PNP | 04713 | 2N2907A |
| A5Q5056 | 151-0302-00 | | | TRANSISTOR:SILICON,NPN | 80009 | 151-0302-00 |
| A5Q5057 | 151-0281-00 | | | TRANSISTOR:SILICON,NPN | 03508 | X16P4039 |
| A5Q5241 | 151-0301-00 | | | TRANSISTOR:SILICON,PNP | 04713 | 2N2907A |
| A5Q5257 | 151-0281-00 | | | TRANSISTOR:SILICON,NPN | 03508 | X16P4039 |
| A5Q5258 | 151-0302-00 | | | TRANSISTOR:SILICON,NPN | 80009 | 151-0302-00 |
| A5R5005 | 315-0102-00 | | | RES.,FXD,CMPSN:1K OHM,5%,0.25W | 01121 | CB1025 |
| A5R5006 | 315-0102-00 | | | RES.,FXD,CMPSN:1K OHM,5%,0.25W | 01121 | CB1025 |
| A5R5007 | 315-0102-00 | | | RES.,FXD,CMPSN:1K OHM,5%,0.25W | 01121 | CB1025 |
| A5R5015 | 315-0103-00 | | | RES.,FXD,CMPSN:10K OHM,5%,0.25W | 01121 | CB1035 |
| A5R5018 | 315-0331-00 | | | RES.,FXD,CMPSN:330 OHM,5%,0.25W | 01121 | CB3315 |
| A5R5041 | 315-0161-00 | | | RES.,FXD,CMPSN:160 OHM,5%,0.25W | 01121 | CB1615 |
| A5R5042 | 315-0332-00 | | | RES.,FXD,CMPSN:3.3K OHM,5%,0.25W | 01121 | CB3325 |
| A5R5051 | 315-0241-00 | | | RES.,FXD,CMPSN:240 OHM,5%,0.25W | 01121 | CB2415 |
| A5R5052 | 315-0162-00 | | | RES.,FXD,CMPSN:1.6K OHM,5%,0.25W | 01121 | CB1625 |
| A5R5053 | 315-0821-00 | | | RES.,FXD,CMPSN:820 OHM,5%,0.25W | 01121 | CB8215 |
| A5R5055 | 315-0473-00 | | | RES.,FXD,CMPSN:47K OHM,5%,0.25W | 01121 | CB4735 |
| A5R5111 | 315-0102-00 | | | RES.,FXD,CMPSN:1K OHM,5%,0.25W | 01121 | CB1025 |
| A5R5114 | 315-0472-00 | | | RES.,FXD,CMPSN:4.7K OHM,5%,0.25W | 01121 | CB4725 |
| A5R5117 | 315-0331-00 | | | RES.,FXD,CMPSN:330 OHM,5%,0.25W | 01121 | CB3315 |
| A5R5135 | 315-0621-00 | | | RES.,FXD,CMPSN:620 OHM,5%,0.25W | 01121 | CB6215 |
| A5R5145 | 315-0621-00 | | | RES.,FXD,CMPSN:620 OHM,5%,0.25W | 01121 | CB6215 |
| A5R5211 | 315-0302-00 | | | RES.,FXD,CMPSN:3K OHM,5%,0.25W | 01121 | CB3025 |
| A5R5212 | 315-0472-00 | | | RES.,FXD,CMPSN:4.7K OHM,5%,0.25W | 01121 | CB4725 |
| A5R5213 | 315-0362-00 | | | RES.,FXD,CMPSN:3.6K OHM,5%,0.25W | 01121 | CB3625 |
| A5R5214 | 315-0751-00 | | | RES.,FXD,CMPSN:750 OHM,5%,0.25W | 01121 | CB7515 |
| A5R5235 | 315-0621-00 | | | RES.,FXD,CMPSN:620 OHM,5%,0.25W | 01121 | CB6215 |
| A5R5236 | 315-0103-00 | | | RES.,FXD,CMPSN:10K OHM,5%,0.25W | 01121 | CB1035 |
| A5R5237 | 315-0472-00 | | | RES.,FXD,CMPSN:4.7K OHM,5%,0.25W | 01121 | CB4725 |
| A5R5238 | 315-0821-00 | | | RES.,FXD,CMPSN:820 OHM,5%,0.25W | 01121 | CB8215 |
| A5R5245 | 315-0621-00 | | | RES.,FXD,CMPSN:620 OHM,5%,0.25W | 01121 | CB6215 |
| A5R5251 | 315-0241-00 | | | RES.,FXD,CMPSN:240 OHM,5%,0.25W | 01121 | CB2415 |
| A5R5252 | 315-0162-00 | | | RES.,FXD,CMPSN:1.6K OHM,5%,0.25W | 01121 | CB1625 |
| A5R5253 | 315-0161-00 | | | RES.,FXD,CMPSN:160 OHM,5%,0.25W | 01121 | CB1615 |
| A5R5254 | 315-0332-00 | | | RES.,FXD,CMPSN:3.3K OHM,5%,0.25W | 01121 | CB3325 |
| A5R5255 | 315-0473-00 | | | RES.,FXD,CMPSN:47K OHM,5%,0.25W | 01121 | CB4735 |
| A5S5210 | 260-1944-00 | | | SWITCH,PUSH:5 BTN,2 POLE,VERTICAL MODE | 80009 | 260-1944-00 |
| A5U5235 | 156-0652-00 | | | MICROCIRCUIT,DI:QUAD 2-INPUT EXCL NOR GATE | 01295 | SN74LS266N |

| Component No. | Tektronix Part No. | Serial/Model No. Eff | Dscont | Name & Description | Mfr Code | Mfr Part Number |
|---|---|---|---|---|---|---|
| A6 | ----- ----- | | | CKT BOARD ASSY:TIMING | | |
| A6C6001 | 281-0763-00 | | | CAP.,FXD,CER DI:47PF,10%,100V | 72982 | 8035D9AADC1G470K |
| A6C6002 | 281-0096-00 | | | CAP.,VAR,AIR DI:5.5-18PF,350V | 72982 | 538-006-A5.5-18 |
| A6C6015 | 281-0089-00 | | | CAP.,VAR,CER DI:2-8PF,350V | 72982 | 538-006-A2-8 |
| A6C6016 | 283-0331-00 | | | CAP.,FXD,CER DI:43PF,2%,100V | 72982 | 805-505A430G |
| A6C6020 | ----- ----- | | | (MATCHED SET WITH A6C6105) | | |
| A6C6033 | 281-0773-00 | | | CAP.,FXD,CER DI:0.01UF,10%,100V | 72982 | 8005H9AADW5R103K |
| A6C6042 | 281-0089-00 | | | CAP.,VAR,CER DI:2-8PF,350V | 72982 | 538-006-A2-8 |
| A6C6043 | 283-0331-00 | | | CAP.,FXD,CER DI:43PF,2%,100V | 72982 | 805-505A430G |
| A6C6105 | 295-0175-00 | | | CAP.,SET,MTCHD:0.1UF,9.95UF,985UF,0.2% | 80009 | 295-0175-00 |
| A6C6110 | ----- ----- | | | (MATCHED SET WITH A6C6105) | | |
| A6C6112 | 283-0645-00 | | | CAP.,FXD,MICA D:790PF,1%,100V | 00853 | D151E791F0 |
| A6C6121 | 290-0245-00 | | | CAP.,FXD,ELCTLT:1.5UF,10%,10V | 56289 | 150D155X9010A2 |
| A6C6122 | 281-0707-00 | B010100 | B011099 | CAP.,FXD,CER DI:1500PF,20%,100V | 72982 | 8003W5R153K |
| A6C6122 | 283-0239-00 | B011100 | | CAP.,FXD,CER DI:0.022UF,10%,50V | 72982 | 8121N083X7R0223K |
| A6C6135, A6C6140, A6C6225 | 295-0157-00 | | | CAP.,SET,MTCHD:0.1UF,1UF,998PF | 80009 | 295-0157-00 |
| A6CR6113 | 152-0141-02 | | | SEMICOND DEVICE:SILICON,30V,50NA | 80009 | 152-0141-02 |
| A6CR6218 | 152-0141-02 | | | SEMICOND DEVICE:SILICON,30V,50NA | 80009 | 152-0141-02 |
| A6CR6219 | 152-0141-02 | | | SEMICOND DEVICE:SILICON,30V,50NA | 80009 | 152-0141-02 |
| A6Q6032 | 151-0190-00 | | | TRANSISTOR:SILICON,NPN | 80009 | 151-0190-00 |
| A6Q6034 | 151-0302-00 | | | TRANSISTOR:SILICON,NPN | 80009 | 151-0302-00 |
| A6Q6036 | 151-0302-00 | | | TRANSISTOR:SILICON,NPN | 80009 | 151-0302-00 |
| A6Q6215 | 151-0188-00 | | | TRANSISTOR:SILICON,PNP | 80009 | 151-0188-00 |
| A6R6001 | 315-0101-00 | | | RES.,FXD,CMPSN:100 OHM,5%,0.25W | 01121 | CB1015 |
| A6R6002 | 323-0498-04 | | | RES.,FXD,FILM:1.5M OHM,0.1%,0.50W | 91637 | HFF129D15003B |
| A6R6004 | 323-0481-04 | | | RES.,FXD,FILM:1M OHM,0.1%,0.50W | 91637 | MFF1226D10003B |
| A6R6006 | 321-0648-04 | | | RES.,FXD,FILM:500K OHM,0.1%,0.125W | 91637 | HMF188D50002B |
| A6R6008 | 321-0618-04 | | | RES.,FXD,FILM:250K OHM,0.1%,0.125W | 91637 | MFF1816D25002B |
| A6R6010 | 321-0414-04 | | | RES.,FXD,FILM:200K OHM,0.1%,0.125W | 91637 | MFF1816D20002B |
| A6R6011 | 311-1915-00 | | | RES.,VAR,NONWIR:20K OHM,10%,0.50W | 73138 | 72-196-0 |
| A6R6012 | 321-0265-00 | | | RES.,FXD,FILM:5.62K OHM,1%,0.125W | 91637 | MFF1816G56200F |
| A6R6013 | 321-0385-04 | | | RES.,FXD,FILM:100K OHM,0.1%,0.125W | 91637 | MFF1816D10002B |
| A6R6014 | 321-0756-04 | | | RES.,FXD,FILM:50K OHM,0.1%,0.125W | 91637 | MFF1816D50001B |
| A6R6017 | 321-0986-07 | | | RES.,FXD,FILM:25K OHM,0.1%,0.125W | 91637 | MFF1816C25001B |
| A6R6018 | 321-0380-00 | | | RES.,FXD,FILM:88.7K OHM,1%,0.125W | 91637 | MFF1816G88701F |
| A6R6019 | 321-0252-00 | | | RES.,FXD,FILM:4.12K OHM,1%,0.125W | 91637 | MFF1816G41200F |
| A6R6020 | 321-0790-00 | | | RES.,FXD,FILM:990K OHM,1%,0.125W | 14298 | AM355D9903F |
| A6R6021 | 321-0983-00 | | | RES.,FXD,FILM:4.5M OHM,1%,0.125W | 91637 | HMF188G45003F |
| A6R6022 | 321-0296-00 | | | RES.,FXD,FILM:11.8K OHM,1%,0.125W | 91637 | MFF1816G11801F |
| A6R6026 | 323-0498-04 | | | RES.,FXD,FILM:1.5M OHM,0.1%,0.50W | 91637 | HFF129D15003B |
| A6R6027 | 323-0481-04 | | | RES.,FXD,FILM:1M OHM,0.1%,0.50W | 91637 | MFF1226D10003B |
| A6R6032 | 321-0648-04 | | | RES.,FXD,FILM:500K OHM,0.1%,0.125W | 91637 | HMF188D50002B |
| A6R6033 | 321-0618-04 | | | RES.,FXD,FILM:250K OHM,0.1%,0.125W | 91637 | MFF1816D25002B |
| A6R6034 | 321-0414-04 | | | RES.,FXD,FILM:200K OHM,0.1%,0.125W | 91637 | MFF1816D20002B |
| A6R6035 | 321-0385-04 | | | RES.,FXD,FILM:100K OHM,0.1%,0.125W | 91637 | MFF1816D10002B |
| A6R6036 | 321-0756-04 | | | RES.,FXD,FILM:50K OHM,0.1%,0.125W | 91637 | MFF1816D50001B |
| A6R6037 | 321-0986-07 | | | RES.,FXD,FILM:25K OHM,0.1%,0.125W | 91637 | MFF1816C25001B |
| A6R6038 | 321-0383-00 | | | RES.,FXD,FILM:95.3K OHM,1%,0.125W | 91637 | MFF1816G95301F |
| A6R6044 | 315-0473-00 | | | RES.,FXD,CMPSN:47K OHM,5%,0.25W | 01121 | CB4735 |
| A6R6045 | 321-0262-00 | | | RES.,FXD,FILM:5.23K OHM,1%,0.125W | 91637 | MFF1816G52300F |
| A6R6046 | 321-0496-00 | | | RES.,FXD,FILM:1.43M OHM,1%,0.125W | 91637 | HFF1813G14303F |
| A6R6047 | 321-0431-00 | | | RES.,FXD,FILM:301K OHM,1%,0.125W | 91637 | MFF1816G30102F |
| A6R6052 | 311-1245-00 | | | RES.,VAR,NONWIR:10K OHM,10%,0.50W | 73138 | 72-28-0 |

| Component No. | Tektronix Part No. | Serial/Model No. Eff | Dscont | Name & Description | Mfr Code | Mfr Part Number |
|---|---|---|---|---|---|---|
| A6R6053 | 311-1254-00 | | | RES.,VAR,NONWIR:1M OHM,20%,0.50W | 32997 | 3386F-T05-105 |
| A6R6054 | 321-0458-00 | | | RES.,FXD,FILM:576K OHM,1%,0.125W | 91637 | MFF1816G57602F |
| A6R6056 | 315-0472-00 | | | RES.,FXD,CMPSN:4.7K OHM,5%,0.25W | 01121 | CB4725 |
| A6R6060 | 315-0331-00 | | | RES.,FXD,CMPSN:330 OHM,5%,0.25W | 01121 | CB3315 |
| A6R6114 | 321-0338-00 | | | RES.,FXD,FILM:32.4K OHM,1%,0.125W | 91637 | MFF1816G32401F |
| A6R6115 | 321-0429-00 | | | RES.,FXD,FILM:287K OHM,1%,0.125W | 91637 | MFF1816G28702F |
| A6R6123 | 321-0481-00 | | | RES.,FXD,FILM:1M OHM,1%,0.125W | 91637 | MFF1816G10003F |
| A6R6152 | 311-1238-00 | | | RES.,VAR,NONWIR:5K OHM,10%,0.50W | 73138 | 72X-27-0-502K |
| A6R6155 | ----- ----- | | | (SEE CHASSIS PARTS) | | |
| A6R6212 | 315-0561-00 | | | RES.,FXD,CMPSN:560 OHM,5%,0.25W | 01121 | CB5615 |
| A6R6213 | 315-0302-00 | | | RES.,FXD,CMPSN:3K OHM,5%,0.25W | 01121 | CB3025 |
| A6R6217 | 315-0682-00 | | | RES.,FXD,CMPSN:6.8K OHM,5%,0.25W | 01121 | CB6825 |
| A6S6111 | ----- ----- | | | (SEE CHASSIS PARTS) | | |
| A6S6155 | ----- ----- | | | (SEE CHASSIS PARTS) | | |
| A6S6205 | 260-1422-00 | | | SWITCH,PUSH:3 STA,INTERLOCK | 80009 | 260-1422-00 |
| A6S6260 | 260-1945-00 | | | SWITCH,PUSH:3 BTN,2 POLE,1 BTN,BLANK | 80009 | 260-1945-00 |
| A6VR6057 | 152-0395-00 | | | SEMICOND DEVICE:ZENER,0.4W,4.3V,5% | 04713 | 1N749A |
| A6VR6058 | 152-0166-00 | | | SEMICOND DEVICE:ZENER,0.4W,6.2V,5% | 80009 | 152-0166-00 |

| Component No. | Tektronix Part No. | Serial/Model No. Eff | Dscont | Name & Description | Mfr Code | Mfr Part Number |
|---|---|---|---|---|---|---|
| A7 | ----- ----- | | | CKT BOARD ASSY:TRIGGER GEN & SWEEP LOGIC | | |
| A7C7006 | 281-0603-00 | | | CAP.,FXD,CER DI:39PF,5%,500V | 72982 | 308-000C0G0390J |
| A7C7008 | 281-0579-00 | | | CAP.,FXD,CER DI:21PF,5%,500V | 72982 | 301-050C0G0210J |
| A7C7018 | 281-0815-00 | | | CAP.,FXD,CER DI:0.027UF,20%,50V | 72982 | 8005D9AABW5R273M |
| A7C7019 | 281-0759-00 | | | CAP.,FXD,CER DI:22PF,10%,100V | 72982 | 8035D9AADC1G220K |
| A7C7025 | 281-0773-00 | | | CAP.,FXD,CER DI:0.01UF,10%,100V | 72982 | 8005H9AADW5R103K |
| A7C7027 | 281-0773-00 | | | CAP.,FXD,CER DI:0.01UF,10%,100V | 72982 | 8005H9AADW5R103K |
| A7C7028 | 281-0773-00 | | | CAP.,FXD,CER DI:0.01UF,10%,100V | 72982 | 8005H9AADW5R103K |
| A7C7052 | 290-0183-00 | | | CAP.,FXD,ELCTLT:1UF,10%,35V | 56289 | 162D105X9035CD2 |
| A7C7108 | 281-0813-00 | | | CAP.,FXD CER DI:0.047UF,20%,100V | 04222 | GC705-E-473M |
| A7C7116 | 281-0814-00 | | | CAP.,FXD,CER DI:100PF,10%,100V | 72982 | 8035D2AADC0G101K |
| A7C7127 | 290-0808-00 | | | CAP.,FXD,ELCTLT:2.7UF,10%,20V | 56289 | 162D275X9020CD2 |
| A7C7128 | 281-0759-00 | | | CAP.,FXD,CER DI:22PF,10%,100V | 72982 | 8035D9AADC1G220K |
| A7C7134 | 281-0773-00 | | | CAP.,FXD,CER DI:0.01UF,10%,100V | 72982 | 8005H9AADW5R103K |
| A7C7158 | 281-0775-00 | | | CAP.,FXD,CER DI:0.1UF,20%,50V | 72982 | 8005D9AABZ5U104M |
| A7C7165 | 281-0814-00 | | | CAP.,FXD,CER DI:100PF,10%,100V | 72982 | 8035D2AADC0G101K |
| A7C7174 | 281-0786-00 | | | CAP.,FXD,CER DI:150PF,10%,100V | 72982 | 8035D2AADX5P151K |
| A7C7182 | 281-0547-00 | | | CAP.,FXD,CER DI:2.7PF,10%,500V | 72982 | 301-000C0J0279C |
| A7C7187 | 281-0547-00 | | | CAP.,FXD,CER DI:2.7PF,10%,500V | 72982 | 301-000C0J0279C |
| A7C7188 | 281-0775-00 | | | CAP.,FXD,CER DI:0.1UF,20%,50V | 72982 | 8005D9AABZ5U104M |
| A7C7192 | 281-0773-00 | | | CAP.,FXD,CER DI:0.01UF,10%,100V | 72982 | 8005H9AADW5R103K |
| A7C7196 | 290-0527-00 | | | CAP.,FXD,ELCTLT:15UF,20%,20V | 90201 | TDC156M020FL |
| A7C7197 | 290-0527-00 | | | CAP.,FXD,ELCTLT:15UF,20%,20V | 90201 | TDC156M020FL |
| A7C7227 | 281-0773-00 | | | CAP.,FXD,CER DI:0.01UF,10%,100V | 72982 | 8005H9AADW5R103K |
| A7C7229 | 281-0773-00 | | | CAP.,FXD,CER DI:0.01UF,10%,100V | 72982 | 8005H9AADW5R103K |
| A7C7244 | 290-0808-00 | | | CAP.,FXD,ELCTLT:2.7UF,10%,20V | 56289 | 162D275X9020CD2 |
| A7C7247 | 290-0808-00 | | | CAP.,FXD,ELCTLT:2.7UF,10%,20V | 56289 | 162D275X9020CD2 |
| A7C7263 | 290-0808-00 | | | CAP.,FXD,ELCTLT:2.7UF,10%,20V | 56289 | 162D275X9020CD2 |
| A7C7265 | 290-0808-00 | | | CAP.,FXD,ELCTLT:2.7UF,10%,20V | 56289 | 162D275X9020CD2 |
| A7C7273 | 290-0183-00 | | | CAP.,FXD,ELCTLT:1UF,10%,35V | 56289 | 162D105X9035CD2 |
| A7C7286 | 281-0775-00 | | | CAP.,FXD,CER DI:0.1UF,20%,50V | 72982 | 8005D9AABZ5U104M |
| A7C7288 | 290-0527-00 | | | CAP.,FXD,ELCTLT:15UF,20%,20V | 90201 | TDC156M020FL |
| A7C7297 | 281-0775-00 | | | CAP.,FXD,CER DI:0.1UF,20%,50V | 72982 | 8005D9AABZ5U104M |
| A7C7303 | 290-0808-00 | | | CAP.,FXD,ELCTLT:2.7UF,10%,20V | 56289 | 162D275X9020CD2 |
| A7C7313 | 281-0815-00 | | | CAP.,FXD,CER DI:0.027UF,20%,50V | 72982 | 8005D9AABW5R273M |
| A7C7317 | 281-0814-00 | | | CAP.,FXD,CER DI:100PF,10%,100V | 72982 | 8035D2AADC0G101K |
| A7C7321 | 281-0773-00 | | | CAP.,FXD,CER DI:0.01UF,10%,100V | 72982 | 8005H9AADW5R103K |
| A7C7329 | 281-0759-00 | | | CAP.,FXD,CER DI:22PF,10%,100V | 72982 | 8035D9AADC1G220K |
| A7C7371 | 281-0797-00 | | | CAP.,FXD,CER DI:15PF,10%,100V | 72982 | 8035D9AADC0G150K |
| A7C7376 | 281-0786-00 | | | CAP.,FXD,CER DI:150PF,10%,100V | 72982 | 8035D2AADX5P151K |
| A7C7377 | 290-0808-00 | | | CAP.,FXD,ELCTLT:2.7UF,10%,20V | 56289 | 162D275X9020CD2 |
| A7C7404 | 281-0579-00 | | | CAP.,FXD,CER DI:21PF,5%,500V | 72982 | 301-050C0G0210J |
| A7C7406 | 281-0814-00 | | | CAP.,FXD,CER DI:100PF,10%,100V | 72982 | 8035D2AADC0G101K |
| A7C7425 | 281-0158-00 | | | CAP.,VAR,CER DI:7-45PF,50V | 73899 | DVJ-5006 |
| A7C7435 | 283-0116-00 | | | CAP.,FXD,CER DI:820PF,5%,500V | 72982 | 801-547B821J |
| A7C7442 | 281-0775-00 | | | CAP.,FXD,CER DI:0.1UF,20%,50V | 72982 | 8005D9AABZ5U104M |
| A7C7443 | 281-0773-00 | | | CAP.,FXD,CER DI:0.01UF,10%,100V | 72982 | 8005H9AADW5R103K |
| A7C7447 | 281-0773-00 | | | CAP.,FXD,CER DI:0.01UF,10%,100V | 72982 | 8005H9AADW5R103K |
| A7C7449 | 281-0814-00 | | | CAP.,FXD,CER DI:100PF,10%,100V | 72982 | 8035D2AADC0G101K |
| A7C7453 | 281-0797-00 | | | CAP.,FXD,CER DI:15PF,10%,100V | 72982 | 8035D9AADC0G150K |
| A7C7458 | 281-0775-00 | | | CAP.,FXD,CER DI:0.1UF,20%,50V | 72982 | 8005D9AABZ5U104M |
| A7C7461 | 281-0814-00 | | | CAP.,FXD,CER DI:100PF,10%,100V | 72982 | 8035D2AADC0G101K |
| A7C7471 | 290-0301-00 | | | CAP.,FXD,ELCTLT:10UF,10%,20V | 56289 | 150D106X9020B2 |
| A7C7505 | 281-0207-00 | | | CAP.,VAR,PLSTC:2-18PF,100V | 80031 | 2807C00218MH02F0 |
| A7C7506 | 281-0217-00 | | | CAP.,VAR,CER DI:0.5-3.5PF,400V | 52763 | RT202-08SB.6/3.5 |

| Component No. | Tektronix Part No. | Serial/Model No. Eff | Dscont | Name & Description | Mfr Code | Mfr Part Number |
|---|---|---|---|---|---|---|
| A7C7507 | 290-0808-00 | | | CAP.,FXD,ELCTLT:2.7UF,10%,20V | 56289 | 162D275X9020CD2 |
| A7C7508 | 281-0811-00 | | | CAP.,FXD,CER DI:10PF,10%,100V | 72982 | 8035D2AADC1G100K |
| A7C7517 | 281-0759-00 | | | CAP.,FXD,CER DI:22PF,10%,100V | 72982 | 8035D9AADC1G220K |
| A7C7519 | 281-0812-00 | | | CAP.,FXD,CER DI:1000PF,10%,100V | 72982 | 8035D9AADX7R102K |
| A7C7529 | 281-0122-00 | | | CAP.,VAR,CER DI:2.5-9PF,100V | 72982 | 518-000A2.5-9 |
| A7C7536 | 281-0775-00 | | | CAP.,FXD,CER DI:0.1UF,20%,50V | 72982 | 8005D9AABZ5U104M |
| A7C7565 | 281-0775-00 | | | CAP.,FXD,CER DI:0.1UF,20%,50V | 72982 | 8005D9AABZ5U104M |
| A7CR7046 | 152-0141-02 | | | SEMICOND DEVICE:SILICON,30V,50NA | 80009 | 152-0141-02 |
| A7CR7072 | 152-0141-02 | | | SEMICOND DEVICE:SILICON,30V,50NA | 80009 | 152-0141-02 |
| A7CR7073 | 152-0141-02 | | | SEMICOND DEVICE:SILICON,30V,50NA | 80009 | 152-0141-02 |
| A7CR7078 | 152-0141-02 | | | SEMICOND DEVICE:SILICON,30V,50NA | 80009 | 152-0141-02 |
| A7CR7084 | 152-0141-02 | | | SEMICOND DEVICE:SILICON,30V,50NA | 80009 | 152-0141-02 |
| A7CR7085 | 152-0141-02 | | | SEMICOND DEVICE:SILICON,30V,50NA | 80009 | 152-0141-02 |
| A7CR7097 | 152-0141-02 | | | SEMICOND DEVICE:SILICON,30V,50NA | 80009 | 152-0141-02 |
| A7CR7098 | 152-0141-02 | | | SEMICOND DEVICE:SILICON,30V,50NA | 80009 | 152-0141-02 |
| A7CR7099 | 152-0141-02 | | | SEMICOND DEVICE:SILICON,30V,50NA | 80009 | 152-0141-02 |
| A7CR7120 | 152-0246-00 | | | SEMICOND DEVICE:SILICON,400PIV,200MA | 80009 | 152-0246-00 |
| A7CR7146 | 152-0141-02 | | | SEMICOND DEVICE:SILICON,30V,50NA | 80009 | 152-0141-02 |
| A7CR7147 | 152-0125-01 | | | SEMICOND DEVICE:TUNNEL,4.7MA,18PF | 03508 | STD704 |
| A7CR7148 | 152-0125-01 | | | SEMICOND DEVICE:TUNNEL,4.7MA,18PF | 03508 | STD704 |
| A7CR7149 | 152-0322-00 | | | SEMICOND DEVICE:SILICON,15V,HOT CARRIER | 80009 | 152-0322-00 |
| A7CR7154 | 152-0141-02 | | | SEMICOND DEVICE:SILICON,30V,50NA | 80009 | 152-0141-02 |
| A7CR7184 | 152-0141-02 | | | SEMICOND DEVICE:SILICON,30V,50NA | 80009 | 152-0141-02 |
| A7CR7272 | 152-0141-02 | | | SEMICOND DEVICE:SILICON,30V,50NA | 80009 | 152-0141-02 |
| A7CR7277 | 152-0141-02 | | | SEMICOND DEVICE:SILICON,30V,50NA | 80009 | 152-0141-02 |
| A7CR7281 | 152-0141-02 | | | SEMICOND DEVICE:SILICON,30V,50NA | 80009 | 152-0141-02 |
| A7CR7322 | 152-0246-00 | | | SEMICOND DEVICE:SILICON,400PIV,200MA | 80009 | 152-0246-00 |
| A7CR7349 | 152-0125-01 | | | SEMICOND DEVICE:TUNNEL,4.7MA,18PF | 03508 | STD704 |
| A7CR7350 | 152-0125-01 | | | SEMICOND DEVICE:TUNNEL,4.7MA,18PF | 03508 | STD704 |
| A7CR7362 | 152-0141-02 | | | SEMICOND DEVICE:SILICON,30V,50NA | 80009 | 152-0141-02 |
| A7CR7381 | 152-0141-02 | | | SEMICOND DEVICE:SILICON,30V,50NA | 80009 | 152-0141-02 |
| A7CR7382 | 152-0141-02 | | | SEMICOND DEVICE:SILICON,30V,50NA | 80009 | 152-0141-02 |
| A7CR7383 | 152-0141-02 | | | SEMICOND DEVICE:SILICON,30V,50NA | 80009 | 152-0141-02 |
| A7CR7385 | 152-0141-02 | | | SEMICOND DEVICE:SILICON,30V,50NA | 80009 | 152-0141-02 |
| A7CR7386 | 152-0141-02 | | | SEMICOND DEVICE:SILICON,30V,50NA | 80009 | 152-0141-02 |
| A7CR7387 | 152-0141-02 | | | SEMICOND DEVICE:SILICON,30V,50NA | 80009 | 152-0141-02 |
| A7CR7449 | 152-0141-02 | | | SEMICOND DEVICE:SILICON,30V,50NA | 80009 | 152-0141-02 |
| A7CR7463 | 152-0141-02 | | | SEMICOND DEVICE:SILICON,30V,50NA | 80009 | 152-0141-02 |
| A7CR7464 | 152-0141-02 | | | SEMICOND DEVICE:SILICON,30V,50NA | 80009 | 152-0141-02 |
| A7CR7521 | 152-0141-02 | | | SEMICOND DEVICE:SILICON,30V,50NA | 80009 | 152-0141-02 |
| A7CR7536 | 152-0141-02 | | | SEMICOND DEVICE:SILICON,30V,50NA | 80009 | 152-0141-02 |
| A7J4541 | 136-0499-14 | | | CONNECTOR,RCPT,:14 CONTACT | 00779 | 4-380949-4 |
| A7J4571 | 136-0499-10 | | | CONNECTOR,RCPT,:10 CONTACT | 00779 | 4-380949-0 |
| A7L7043 | 108-0370-00 | | | COIL,RF:0.14UH | 80009 | 108-0370-00 |
| A7L7137 | 108-0370-00 | | | COIL,RF:0.14UH | 80009 | 108-0370-00 |
| A7L7278 | 108-0538-00 | | | COIL,RF:2.7UH | 76493 | 70F276A1 |
| A7L7341 | 108-0370-00 | | | COIL,RF:0.14UH | 80009 | 108-0370-00 |
| A7L7441 | 108-0370-00 | | | COIL,RF:0.14UH | 80009 | 108-0370-00 |
| A7L7525 | 108-0655-00 | | | COIL,RF:FIXED,75NH | 80009 | 108-0655-00 |
| A7Q7053 | 151-0220-03 | | | TRANSISTOR:SILICON,PNP,SEL | 80009 | 151-0220-03 |
| A7Q7055 | 151-0220-03 | | | TRANSISTOR:SILICON,PNP,SEL | 80009 | 151-0220-03 |
| A7Q7067 | 151-0232-00 | | | TRANSISTOR:SILICON,NPN,DUAL | 80009 | 151-0232-00 |
| A7Q7074 | 151-0220-03 | | | TRANSISTOR:SILICON,PNP,SEL | 80009 | 151-0220-03 |
| A7Q7075 | 151-0220-03 | | | TRANSISTOR:SILICON,PNP,SEL | 80009 | 151-0220-03 |
| A7Q7076 | 151-0190-00 | | | TRANSISTOR:SILICON,NPN | 80009 | 151-0190-00 |

| Component No. | Tektronix Part No. | Serial/Model No. Eff | Dscont | Name & Description | Mfr Code | Mfr Part Number |
|---|---|---|---|---|---|---|
| A7Q7083 | 151-0220-03 | | | TRANSISTOR:SILICON,PNP,SEL | 80009 | 151-0220-03 |
| A7Q7092 | 151-0220-03 | | | TRANSISTOR:SILICON,PNP,SEL | 80009 | 151-0220-03 |
| A7Q7093 | 151-0190-00 | | | TRANSISTOR:SILICON,NPN | 80009 | 151-0190-00 |
| A7Q7095 | 151-0190-00 | | | TRANSISTOR:SILICON,NPN | 80009 | 151-0190-00 |
| A7Q7124A,B | 151-1042-00 | | | SEMICOND DVC SE:MATCHED PAIR FET | 80009 | 151-1042-00 |
| A7Q7142 | 151-0221-00 | | | TRANSISTOR:SILICON,PNP | 80009 | 151-0221-00 |
| A7Q7143 | 151-0221-00 | | | TRANSISTOR:SILICON,PNP | 80009 | 151-0221-00 |
| A7Q7155 | 151-0220-03 | | | TRANSISTOR:SILICON,PNP,SEL | 80009 | 151-0220-03 |
| A7Q7174 | 151-0190-00 | | | TRANSISTOR:SILICON,NPN | 80009 | 151-0190-00 |
| A7Q7181 | 151-0190-00 | | | TRANSISTOR:SILICON,NPN | 80009 | 151-0190-00 |
| A7Q7182 | 151-0190-00 | | | TRANSISTOR:SILICON,NPN | 80009 | 151-0190-00 |
| A7Q7195 | 151-0190-00 | | | TRANSISTOR:SILICON,NPN | 80009 | 151-0190-00 |
| A7Q7254 | 151-0220-03 | | | TRANSISTOR:SILICON,PNP,SEL | 80009 | 151-0220-03 |
| A7Q7256 | 151-0220-03 | | | TRANSISTOR:SILICON,PNP,SEL | 80009 | 151-0220-03 |
| A7Q7324A,B | 151-1042-00 | | | SEMICOND DVC SE:MATCHED PAIR FET | 80009 | 151-1042-00 |
| A7Q7344 | 151-0221-00 | | | TRANSISTOR:SILICON,PNP | 80009 | 151-0221-00 |
| A7Q7345 | 151-0221-00 | | | TRANSISTOR:SILICON,PNP | 80009 | 151-0221-00 |
| A7Q7422 | 151-0441-00 | | | TRANSISTOR:SILICON,NPN | 80009 | 151-0441-00 |
| A7Q7424 | 151-0441-00 | | | TRANSISTOR:SILICON,NPN | 80009 | 151-0441-00 |
| A7Q7460 | 151-0220-03 | | | TRANSISTOR:SILICON,PNP,SEL | 80009 | 151-0220-03 |
| A7Q7465 | 151-0190-00 | | | TRANSISTOR:SILICON,NPN | 80009 | 151-0190-00 |
| A7R7009 | 315-0334-00 | | | RES.,FXD,CMPSN:330K OHM,5%,0.25W | 01121 | CB3345 |
| A7R7014 | 315-0104-00 | | | RES.,FXD,CMPSN:100K OHM,5%,0.25W | 01121 | CB1045 |
| A7R7020 | 315-0101-00 | | | RES.,FXD,CMPSN:100 OHM,5%,0.25W | 01121 | CB1015 |
| A7R7024 | 315-0101-00 | | | RES.,FXD,CMPSN:100 OHM,5%,0.25W | 01121 | CB1015 |
| A7R7025 | 315-0101-00 | | | RES.,FXD,CMPSN:100 OHM,5%,0.25W | 01121 | CB1015 |
| A7R7026 | 311-1558-00 | | | RES.,VAR,NONWIR:20K OHM,20%,0.50W | 73138 | 91-80-0 |
| A7R7027 | 315-0101-00 | | | RES.,FXD,CMPSN:100 OHM,5%,0.25W | 01121 | CB1015 |
| A7R7028 | 315-0681-00 | | | RES.,FXD,CMPSN:680 OHM,5%,0.25W | 01121 | CB6815 |
| A7R7029 | 321-0209-00 | | | RES.,FXD,FILM:1.47K OHM,1%,0.125W | 91637 | MFF1816G14700F |
| A7R7032 | 315-0202-00 | | | RES.,FXD,CMPSN:2K OHM,5%,0.25W | 01121 | CB2025 |
| A7R7033 | 315-0560-00 | | | RES.,FXD,CMPSN:56 OHM,5%,0.25W | 01121 | CB5605 |
| A7R7034 | 315-0222-00 | | | RES.,FXD,CMPSN:2.2K OHM,5%,0.25W | 01121 | CB2225 |
| A7R7035 | 315-0682-00 | | | RES.,FXD,CMPSN:6.8K OHM,5%,0.25W | 01121 | CB6825 |
| A7R7036 | 315-0182-00 | | | RES.,FXD,CMPSN:1.8K OHM,5%,0.25W | 01121 | CB1825 |
| A7R7037 | 315-0182-00 | | | RES.,FXD,CMPSN:1.8K OHM,5%,0.25W | 01121 | CB1825 |
| A7R7038 | 315-0103-00 | | | RES.,FXD,CMPSN:10K OHM,5%,0.25W | 01121 | CB1035 |
| A7R7042 | 311-1558-00 | | | RES.,VAR,NONWIR:20K OHM,20%,0.50W | 73138 | 91-80-0 |
| A7R7043 | 315-0101-00 | | | RES.,FXD,CMPSN:100 OHM,5%,0.25W | 01121 | CB1015 |
| A7R7044 | 315-0274-00 | | | RES.,FXD,CMPSN:270K OHM,5%,0.25W | 01121 | CB2745 |
| A7R7045 | 311-1558-00 | | | RES.,VAR,NONWIR:20K OHM,20%,0.50W | 73138 | 91-80-0 |
| A7R7046 | 315-0104-00 | | | RES.,FXD,CMPSN:100K OHM,5%,0.25W | 01121 | CB1045 |
| A7R7047 | 315-0330-00 | | | RES.,FXD,CMPSN:33 OHM,5%,0.25W | 01121 | CB3305 |
| A7R7048 | 315-0562-00 | | | RES.,FXD,CMPSN:5.6K OHM,5%,0.25W | 01121 | CB5625 |
| A7R7049 | 315-0390-00 | | | RES.,FXD,CMPSN:39 OHM,5%,0.25W | 01121 | CB3905 |
| A7R7052 | 321-0200-00 | | | RES.,FXD,FILM:1.18K OHM,1%,0.125W | 91637 | MFF1816G11800F |
| A7R7056 | 315-0151-00 | | | RES.,FXD,CMPSN:150 OHM,5%,0.25W | 01121 | CB1515 |
| A7R7057 | 315-0332-00 | | | RES.,FXD,CMPSN:3.3K OHM,5%,0.25W | 01121 | CB3325 |
| A7R7062 | 315-0101-00 | | | RES.,FXD,CMPSN:100 OHM,5%,0.25W | 01121 | CB1015 |
| A7R7063 | 315-0681-00 | | | RES.,FXD,CMPSN:680 OHM,5%,0.25W | 01121 | CB6815 |
| A7R7064 | 315-0752-00 | | | RES.,FXD,CMPSN:7.5K OHM,5%,0.25W | 01121 | CB7525 |
| A7R7065 | 315-0681-00 | | | RES.,FXD,CMPSN:680 OHM,5%,0.25W | 01121 | CB6815 |
| A7R7066 | 315-0101-00 | | | RES.,FXD,CMPSN:100 OHM,5%,0.25W | 01121 | CB1015 |
| A7R7068 | 315-0562-00 | | | RES.,FXD,CMPSN:5.6K OHM,5%,0.25W | 01121 | CB5625 |
| A7R7069 | 301-0622-00 | | | RES.,FXD,CMPSN:6.2K OHM,5%,0.50W | 01121 | EB6225 |

| Component No. | Tektronix Part No. | Serial/Model No. Eff | Dscont | Name & Description | Mfr Code | Mfr Part Number |
|---|---|---|---|---|---|---|
| A7R7070 | 315-0102-00 | | | RES.,FXD,CMPSN:1K OHM,5%,0.25W | 01121 | CB1025 |
| A7R7077 | 301-0471-00 | | | RES.,FXD,CMPSN:470 OHM,5%,0.50W | 01121 | EB4715 |
| A7R7078 | 301-0471-00 | | | RES.,FXD,CMPSN:470 OHM,5%,0.50W | 01121 | EB4715 |
| A7R7079 | 321-0155-00 | | | RES.,FXD,FILM:402 OHM,1%,0.125W | 91637 | MFF1816G402R0F |
| A7R7084 | 315-0911-00 | | | RES.,FXD,CMPSN:910 OHM,5%,0.25W | 01121 | CB9115 |
| A7R7085 | 315-0221-00 | | | RES.,FXD,CMPSN:220 OHM,5%,0.25W | 01121 | CB2215 |
| A7R7086 | 315-0221-00 | | | RES.,FXD,CMPSN:220 OHM,5%,0.25W | 01121 | CB2215 |
| A7R7087 | 321-0155-00 | | | RES.,FXD,FILM:402 OHM,1%,0.125W | 91637 | MFF1816G402R0F |
| A7R7088 | 321-0215-00 | | | RES.,FXD,FILM:1.69K OHM,1%,0.125W | 91637 | MFF1816G16900F |
| A7R7097 | 315-0472-00 | | | RES.,FXD,CMPSN:4.7K OHM,5%,0.25W | 01121 | CB4725 |
| A7R7098 | 315-0911-00 | | | RES.,FXD,CMPSN:910 OHM,5%,0.25W | 01121 | CB9115 |
| A7R7106 | 315-0754-00 | | | RES.,FXD,CMPSN:750K OHM,5%,0.25W | 01121 | CB7545 |
| A7R7108 | 315-0101-00 | | | RES.,FXD,CMPSN:100 OHM,5%,0.25W | 01121 | CB1015 |
| A7R7111 | 315-0563-00 | | | RES.,FXD,CMPSN:56K OHM,5%,0.25W | 01121 | CB5635 |
| A7R7119 | 321-0481-00 | | | RES.,FXD,FILM:1M OHM,1%,0.125W | 91637 | MFF1816G10003F |
| A7R7121 | 315-0150-00 | | | RES.,FXD,CMPSN:15 OHM,5%,0.25W | 01121 | CB1505 |
| A7R7125 | 315-0150-00 | | | RES.,FXD,CMPSN:15 OHM,5%,0.25W | 01121 | CB1505 |
| A7R7126 | 321-0209-00 | | | RES.,FXD,FILM:1.47K OHM,1%,0.125W | 91637 | MFF1816G14700F |
| A7R7128 | 315-0390-00 | | | RES.,FXD,CMPSN:39 OHM,5%,0.25W | 01121 | CB3905 |
| A7R7132 | 315-0362-00 | | | RES.,FXD,CMPSN:3.6K OHM,5%,0.25W | 01121 | CB3625 |
| A7R7133 | 315-0102-00 | | | RES.,FXD,CMPSN:1K OHM,5%,0.25W | 01121 | CB1025 |
| A7R7134 | 315-0331-00 | | | RES.,FXD,CMPSN:330 OHM,5%,0.25W | 01121 | CB3315 |
| A7R7135 | 315-0153-00 | | | RES.,FXD,CMPSN:15K OHM,5%,0.25W | 01121 | CB1535 |
| A7R7142 | 315-0101-00 | | | RES.,FXD,CMPSN:100 OHM,5%,0.25W | 01121 | CB1015 |
| A7R7143 | 315-0274-00 | | | RES.,FXD,CMPSN:270K OHM,5%,0.25W | 01121 | CB2745 |
| A7R7145 | 315-0330-00 | | | RES.,FXD,CMPSN:33 OHM,5%,0.25W | 01121 | CB3305 |
| A7R7147 | 321-0097-00 | | | RES.,FXD,FILM:100 OHM,1%,0.125W | 91637 | MFF1816G100R0F |
| A7R7149 | 321-0258-00 | | | RES.,FXD,FILM:4.75K OHM,1%,0.125W | 91637 | MFF1816G47500F |
| A7R7150 | 323-0310-00 | | | RES.,FXD,FILM:16.5K OHM,1%,0.50W | 75042 | CEC70-1652F |
| A7R7152 | 315-0331-00 | | | RES.,FXD,CMPSN:330 OHM,5%,0.25W | 01121 | CB3315 |
| A7R7154 | 315-0681-00 | | | RES.,FXD,CMPSN:680 OHM,5%,0.25W | 01121 | CB6815 |
| A7R7155 | 315-0681-00 | | | RES.,FXD,CMPSN:680 OHM,5%,0.25W | 01121 | CB6815 |
| A7R7157 | 321-0186-00 | | | RES.,FXD,FILM:845 OHM,1%,0.125W | 91637 | MFF1816G845R0F |
| A7R7159 | 315-0270-00 | | | RES.,FXD,CMPSN:27 OHM,5%,0.25W | 01121 | CB2705 |
| A7R7162 | 315-0132-00 | | | RES.,FXD,CMPSN:1.3K OHM,5%,0.25W | 01121 | CB1325 |
| A7R7164 | 301-0562-00 | | | RES.,FXD,CMPSN:5.6K OHM,5%,0.50W | 01121 | EB5625 |
| A7R7165 | 315-0561-00 | | | RES.,FXD,CMPSN:560 OHM,5%,0.25W | 01121 | CB5615 |
| A7R7166 | 321-0206-00 | | | RES.,FXD,FILM:1.37K OHM,1%,0.125W | 91637 | MFF1816G13700F |
| A7R7167 | 321-0243-00 | | | RES.,FXD,FILM:3.32K OHM,1%,0.125W | 91637 | MFF1816G33200F |
| A7R7171 | 315-0752-00 | | | RES.,FXD,CMPSN:7.5K OHM,5%,0.25W | 01121 | CB7525 |
| A7R7173 | 315-0102-00 | | | RES.,FXD,CMPSN:1K OHM,5%,0.25W | 01121 | CB1025 |
| A7R7175 | 321-0155-00 | | | RES.,FXD,FILM:402 OHM,1%,0.125W | 91637 | MFF1816G402R0F |
| A7R7176 | 321-0209-00 | | | RES.,FXD,FILM:1.47K OHM,1%,0.125W | 91637 | MFF1816G14700F |
| A7R7177 | 321-0171-00 | | | RES.,FXD,FILM:590 OHM,1%,0.125W | 91637 | MFF1816G590R0F |
| A7R7178 | 321-0192-00 | | | RES.,FXD,FILM:976 OHM,1%,0.125W | 91637 | MFF1816G976R0F |
| A7R7179 | 321-0227-00 | | | RES.,FXD,FILM:2.26K OHM,1%,0.125W | 91637 | MFF1816G22600F |
| A7R7184 | 315-0472-00 | | | RES.,FXD,CMPSN:4.7K OHM,5%,0.25W | 01121 | CB4725 |
| A7R7186 | 321-0192-00 | | | RES.,FXD,FILM:976 OHM,1%,0.125W | 91637 | MFF1816G976R0F |
| A7R7187 | 321-0171-00 | | | RES.,FXD,FILM:590 OHM,1%,0.125W | 91637 | MFF1816G590R0F |
| A7R7188 | 315-0220-00 | | | RES.,FXD,CMPSN:22 OHM,5%,0.25W | 01121 | CB2205 |
| A7R7192 | 321-0231-00 | | | RES.,FXD,FILM:2.49K OHM,1%,0.125W | 91637 | MFF1816G24900F |
| A7R7194 | 321-0264-00 | | | RES.,FXD,FILM:5.49K OHM,1%,0.125W | 91637 | MFF1816G54900F |
| A7R7196 | 315-0182-00 | | | RES.,FXD,CMPSN:1.8K OHM,5%,0.25W | 01121 | CB1825 |
| A7R7197 | 321-0155-00 | | | RES.,FXD,FILM:402 OHM,1%,0.125W | 91637 | MFF1816G402R0F |
| A7R7208 | 321-0068-00 | | | RES.,FXD,FILM:49.9 OHM,1%,0.125W | 91637 | MFF1816G49R90F |

| Component No. | Tektronix Part No. | Serial/Model No. Eff | Dscont | Name & Description | Mfr Code | Mfr Part Number |
|---|---|---|---|---|---|---|
| A7R7213 | 321-0068-00 | | | RES.,FXD,FILM:49.9 OHM,1%,0.125W | 91637 | MFF1816G49R90F |
| A7R7218 | 321-0068-00 | | | RES.,FXD,FILM:49.9 OHM,1%,0.125W | 91637 | MFF1816G49R90F |
| A7R7224 | 311-1558-00 | | | RES.,VAR,NONWIR:20K OHM,20%,0.50W | 73138 | 91-80-0 |
| A7R7226 | 315-0202-00 | | | RES.,FXD,CMPSN:2K OHM,5%,0.25W | 01121 | CB2025 |
| A7R7228 | 315-0681-00 | | | RES.,FXD,CMPSN:680 OHM,5%,0.25W | 01121 | CB6815 |
| A7R7229 | 315-0101-00 | | | RES.,FXD,CMPSN:100 OHM,5%,0.25W | 01121 | CB1015 |
| A7R7232 | 321-0209-00 | | | RES.,FXD,FILM:1.47K OHM,1%,0.125W | 91637 | MFF1816G14700F |
| A7R7233 | 315-0560-00 | | | RES.,FXD,CMPSN:56 OHM,5%,0.25W | 01121 | CB5605 |
| A7R7234 | 315-0182-00 | | | RES.,FXD,CMPSN:1.8K OHM,5%,0.25W | 01121 | CB1825 |
| A7R7235 | 315-0222-00 | | | RES.,FXD,CMPSN:2.2K OHM,5%,0.25W | 01121 | CB2225 |
| A7R7236 | 315-0682-00 | | | RES.,FXD,CMPSN:6.8K OHM,5%,0.25W | 01121 | CB6825 |
| A7R7237 | 315-0182-00 | | | RES.,FXD,CMPSN:1.8K OHM,5%,0.25W | 01121 | CB1825 |
| A7R7238 | 315-0103-00 | | | RES.,FXD,CMPSN:10K OHM,5%,0.25W | 01121 | CB1035 |
| A7R7242 | 311-1558-00 | | | RES.,VAR,NONWIR:20K OHM,20%,0.50W | 73138 | 91-80-0 |
| A7R7243 | 315-0274-00 | | | RES.,FXD,CMPSN:270K OHM,5%,0.25W | 01121 | CB2745 |
| A7R7246 | 311-1558-00 | | | RES.,VAR,NONWIR:20K OHM,20%,0.50W | 73138 | 91-80-0 |
| A7R7248 | 315-0562-00 | | | RES.,FXD,CMPSN:5.6K OHM,5%,0.25W | 01121 | CB5625 |
| A7R7253 | 321-0196-00 | | | RES.,FXD,FILM:1.07K OHM,1%,0.125W | 91637 | MFF1816G10700F |
| A7R7264 | 315-0331-00 | | | RES.,FXD,CMPSN:330 OHM,5%,0.25W | 01121 | CB3315 |
| A7R7267 | 315-0472-00 | | | RES.,FXD,CMPSN:4.7K OHM,5%,0.25W | 01121 | CB4725 |
| A7R7269 | 315-0331-00 | | | RES.,FXD,CMPSN:330 OHM,5%,0.25W | 01121 | CB3315 |
| A7R7272 | 315-0334-00 | | | RES.,FXD,CMPSN:330K OHM,5%,0.25W | 01121 | CB3345 |
| A7R7275 | 315-0102-00 | | | RES.,FXD,CMPSN:1K OHM,5%,0.25W | 01121 | CB1025 |
| A7R7276 | 315-0241-00 | | | RES.,FXD,CMPSN:240 OHM,5%,0.25W | 01121 | CB2415 |
| A7R7277 | 315-0472-00 | | | RES.,FXD,CMPSN:4.7K OHM,5%,0.25W | 01121 | CB4725 |
| A7R7281 | 315-0112-00 | | | RES.,FXD,CMPSN:1.1K OHM,5%,0.25W | 01121 | CB1125 |
| A7R7283 | 315-0112-00 | | | RES.,FXD,CMPSN:1.1K OHM,5%,0.25W | 01121 | CB1125 |
| A7R7284 | 315-0162-00 | | | RES.,FXD,CMPSN:1.6K OHM,5%,0.25W | 01121 | CB1625 |
| A7R7287 | 315-0220-00 | | | RES.,FXD,CMPSN:22 OHM,5%,0.25W | 01121 | CB2205 |
| A7R7297 | 315-0220-00 | | | RES.,FXD,CMPSN:22 OHM,5%,0.25W | 01121 | CB2205 |
| A7R7305 | 315-0510-00 | | | RES.,FXD,CMPSN:51 OHM,5%,0.25W | 01121 | CB5105 |
| A7R7306 | 315-0820-00 | | | RES.,FXD,CMPSN:82 OHM,5%,0.25W | 01121 | CB8205 |
| A7R7308 | 315-0241-00 | | | RES.,FXD,CMPSN:240 OHM,5%,0.25W | 01121 | CB2415 |
| A7R7316 | 315-0563-00 | | | RES.,FXD,CMPSN:56K OHM,5%,0.25W | 01121 | CB5635 |
| A7R7319 | 315-0101-00 | | | RES.,FXD,CMPSN:100 OHM,5%,0.25W | 01121 | CB1015 |
| A7R7325 | 315-0150-00 | | | RES.,FXD,CMPSN:15 OHM,5%,0.25W | 01121 | CB1505 |
| A7R7326 | 315-0101-00 | | | RES.,FXD,CMPSN:100 OHM,5%,0.25W | 01121 | CB1015 |
| A7R7327 | 315-0150-00 | | | RES.,FXD,CMPSN:15 OHM,5%,0.25W | 01121 | CB1505 |
| A7R7328 | 315-0270-00 | | | RES.,FXD,CMPSN:27 OHM,5%,0.25W | 01121 | CB2705 |
| A7R7329 | 315-0390-00 | | | RES.,FXD,CMPSN:39 OHM,5%,0.25W | 01121 | CB3905 |
| A7R7342 | 315-0102-00 | | | RES.,FXD,CMPSN:1K OHM,5%,0.25W | 01121 | CB1025 |
| A7R7343 | 315-0101-00 | | | RES.,FXD,CMPSN:100 OHM,5%,0.25W | 01121 | CB1015 |
| A7R7346 | 315-0330-00 | | | RES.,FXD,CMPSN:33 OHM,5%,0.25W | 01121 | CB3305 |
| A7R7347 | 315-0330-00 | | | RES.,FXD,CMPSN:33 OHM,5%,0.25W | 01121 | CB3305 |
| A7R7348 | 315-0390-00 | | | RES.,FXD,CMPSN:39 OHM,5%,0.25W | 01121 | CB3905 |
| A7R7349 | 321-0097-00 | | | RES.,FXD,FILM:100 OHM,1%,0.125W | 91637 | MFF1816G100R0F |
| A7R7355 | 315-0471-00 | | | RES.,FXD,CMPSN:470 OHM,5%,0.25W | 01121 | CB4715 |
| A7R7356 | 321-0258-00 | | | RES.,FXD,FILM:4.75K OHM,1%,0.125W | 91637 | MFF1816G47500F |
| A7R7357 | 315-0332-00 | | | RES.,FXD,CMPSN:3.3K OHM,5%,0.25W | 01121 | CB3325 |
| A7R7358 | 315-0151-00 | | | RES.,FXD,CMPSN:150 OHM,5%,0.25W | 01121 | CB1515 |
| A7R7361 | 315-0132-00 | | | RES.,FXD,CMPSN:1.3K OHM,5%,0.25W | 01121 | CB1325 |
| A7R7365 | 315-0102-00 | | | RES.,FXD,CMPSN:1K OHM,5%,0.25W | 01121 | CB1025 |
| A7R7402 | 321-0790-00 | | | RES.,FXD,FILM:990K OHM,1%,0.125W | 14298 | AM355D9903F |
| A7R7404 | 321-0450-00 | | | RES.,FXD,FILM:475K OHM,1%,0.125W | 91637 | MFF1816G47502F |
| A7R7406 | 321-0381-00 | | | RES.,FXD,FILM:90.9K OHM,1%,0.125W | 91637 | MFF1816G90901F |

| Component No. | Tektronix Part No. | Serial/Model No. Eff | Dscont | Name & Description | Mfr Code | Mfr Part Number |
|---|---|---|---|---|---|---|
| A7R7407 | 315-0270-00 | | | RES.,FXD,CMPSN:27 OHM,5%,0.25W | 01121 | CB2705 |
| A7R7408 | 315-0392-00 | | | RES.,FXD,CMPSN:3.9K OHM,5%,0.25W | 01121 | CB3925 |
| A7R7417 | 321-0481-00 | | | RES.,FXD,FILM:1M OHM,1%,0.125W | 24546 | NA4D1004F |
| A7R7421 | 315-0101-00 | | | RES.,FXD,CMPSN:100 OHM,5%,0.25W | 01121 | CB1015 |
| A7R7423 | 311-1260-00 | | | RES.,VAR,NONWIR:250 OHM,10%,0.50W | 32997 | 3329P-L58-251 |
| A7R7432 | 315-0270-00 | | | RES.,FXD,CMPSN:27 OHM,5%,0.25W | 01121 | CB2705 |
| A7R7434 | 315-0200-00 | | | RES.,FXD,CMPSN:20 OHM,5%,0.25W | 01121 | CB2005 |
| A7R7435 | 315-0162-00 | | | RES.,FXD,CMPSN:1.6K OHM,5%,0.25W | 01121 | CB1625 |
| A7R7436 | 321-0209-00 | | | RES.,FXD,FILM:1.47K OHM,1%,0.125W | 91637 | MFF1816G14700F |
| A7R7437 | 315-0362-00 | | | RES.,FXD,CMPSN:3.6K OHM,5%,0.25W | 01121 | CB3625 |
| A7R7439 | 311-1567-00 | | | RES.,VAR,NONWIR:TRMR,100 OHM,0.50W | 73138 | 91-89-0 |
| A7R7441 | 315-0101-00 | | | RES.,FXD,CMPSN:100 OHM,5%,0.25W | 01121 | CB1015 |
| A7R7444 | 315-0331-00 | | | RES.,FXD,CMPSN:330 OHM,5%,0.25W | 01121 | CB3315 |
| A7R7445 | 315-0274-00 | | | RES.,FXD,CMPSN:270K OHM,5%,0.25W | 01121 | CB2745 |
| A7R7453 | 315-0103-00 | | | RES.,FXD,CMPSN:10K OHM,5%,0.25W | 01121 | CB1035 |
| A7R7455 | 315-0471-00 | | | RES.,FXD,CMPSN:470 OHM,5%,0.25W | 01121 | CB4715 |
| A7R7456 | 321-0200-00 | | | RES.,FXD,FILM:1.18K OHM,1%,0.125W | 91637 | MFF1816G11800F |
| A7R7457 | 315-0270-00 | | | RES.,FXD,CMPSN:27 OHM,5%,0.25W | 01121 | CB2705 |
| A7R7458 | 321-0243-00 | | | RES.,FXD,FILM:3.32K OHM,1%,0.125W | 91637 | MFF1816G33200F |
| A7R7461 | 321-0201-00 | | | RES.,FXD,FILM:1.21K OHM,1%,0.125W | 91637 | MFF1816G12100F |
| A7R7465 | 315-0822-00 | | | RES.,FXD,CMPSN:8.2K OHM,5%,0.25W | 01121 | CB8225 |
| A7R7471 | 315-0101-00 | | | RES.,FXD,CMPSN:100 OHM,5%,0.25W | 01121 | CB1015 |
| A7R7503 | 315-0100-00 | | | RES.,FXD,CMPSN:10 OHM,5%,0.25W | 01121 | CB1005 |
| A7R7506 | 325-0245-00 | | | RES.,FXD,FILM:3.32M OHM,1%,0.125W | 01121 | CC3324F2 |
| A7R7516 | 315-0104-00 | | | RES.,FXD,CMPSN:100K OHM,5%,0.25W | 01121 | CB1045 |
| A7R7519 | 321-0175-00 | | | RES.,FXD,FILM:649 OHM,1%,0.125W | 91637 | MFF1816G649R0F |
| A7R7521 | 321-0198-00 | | | RES.,FXD,FILM:1.13K OHM,1%,0.125W | 91637 | MFF1816G11300F |
| A7R7522 | 315-0430-00 | | | RES.,FXD,CMPSN:43 OHM,5%,0.25W | 01121 | CB4305 |
| A7R7525 | 315-0124-00 | | | RES.,FXD,CMPSN:120K OHM,5%,0.25W | 01121 | CB1245 |
| A7R7526 | 311-0622-00 | | | RES.,VAR,NONWIR:100 OHM,10%,0.50W | 32997 | 3326H-G48-101 |
| A7R7533 | 321-0198-00 | | | RES.,FXD,FILM:1.13K OHM,1%,0.125W | 91637 | MFF1816G11300F |
| A7R7534 | 315-0430-00 | | | RES.,FXD,CMPSN:43 OHM,5%,0.25W | 01121 | CB4305 |
| A7R7545 | 323-0310-00 | | | RES.,FXD,FILM:16.5K OHM,1%,0.50W | 75042 | CECTO-1652F |
| A7R7565 | 315-0274-00 | | | RES.,FXD,CMPSN:270K OHM,5%,0.25W | 01121 | CB2745 |
| A7RT7147 | 307-0124-00 | | | RES.,THERMAL:5K OHM,10% | 50157 | 1D1618 |
| A7RT7349 | 307-0124-00 | | | RES.,THERMAL:5K OHM,10% | 50157 | 1D1618 |
| A7S7015 | 263-0065-00 | | | SW SL ACTR ASSY:B COUPLING,4 OF 5 POSITION | 80009 | 263-0065-00 |
| A7S7112 | 263-0066-00 | | | SW SL ACTR ASSY:B SOURCE,5 OF 6 POSITION | 80009 | 263-0066-00 |
| A7S7312 | 263-0068-00 | | | SW SL ACTR ASSY:A SOURCE,6 OF 6 POSITION | 80009 | 263-0068-00 |
| A7S7415 | 263-0067-00 | | | SW SL ACTR ASSY:A COUPLING,4 OF 6 POSITION | 80009 | 263-0067-00 |
| A7U7131 | 155-0032-00 | | | MICROCIRCUIT,LI:ML,PRE-AMPLIFIER | 80009 | 155-0032-00 |
| A7U7331 | 155-0032-00 | | | MICROCIRCUIT,LI:ML,PRE-AMPLIFIER | 80009 | 155-0032-00 |
| A7U7375 | 155-0049-00 | | | MICROCIRCUIT,DI:SWEEP CONTROL | 80009 | 155-0049-00 |
| A7VR7047 | 152-0175-00 | | | SEMICOND DEVICE:ZENER,0.4W,5.6V,5% | 80009 | 152-0175-00 |
| A7VR7145 | 152-0175-00 | | | SEMICOND DEVICE:ZENER,0.4W,5.6V,5% | 80009 | 152-0175-00 |
| A7VR7256 | 152-0227-00 | | | SEMICOND DEVICE:ZENER,0.4W,6.2V,5% | 80009 | 152-0227-00 |
| A7VR7275 | 152-0278-00 | | | SEMICOND DEVICE:ZENER,0.4W,3V,5% | 80009 | 152-0278-00 |
| A7VR7346 | 152-0175-00 | | | SEMICOND DEVICE:ZENER,0.4W,5.6V,5% | 80009 | 152-0175-00 |
| A7VR7446 | 152-0175-00 | | | SEMICOND DEVICE:ZENER,0.4W,5.6V,5% | 80009 | 152-0175-00 |
| A7VR7520 | 152-0195-00 | | | SEMICOND DEVICE:ZENER,0.4W,5.1V,5% | 80009 | 152-0195-00 |
| A7W7291 | 131-0566-00 | | | LINK,TERM.CONNE:0.086 DIA X 2.375 INCH L | 55210 | L-2007-1 |
| A7W7292 | 131-0566-00 | | | LINK,TERM.CONNE:0.086 DIA X 2.375 INCH L | 55210 | L-2007-1 |
| A7W7293 | 131-0566-00 | | | LINK,TERM.CONNE:0.086 DIA X 2.375 INCH L | 55210 | L-2007-1 |

| Component No. | Tektronix Part No. | Serial/Model No. Eff | Dscont | Name & Description | Mfr Code | Mfr Part Number |
|---|---|---|---|---|---|---|
| A8 | ----- ----- | | | CKT BOARD ASSY:FAN MOTOR | | |
| A8B8045 | 147-0035-00 | | | MOTOR,DC:BRUSHLESS,10-15VDC,145MA | 25088 | 1AD3001-0A |
| A8C8064 | 290-0536-00 | | | CAP.,FXD,ELCTLT:10UF,20%,25V | 90201 | TDC106M025FL |
| A8CR8042 | 152-0141-02 | | | SEMICOND DEVICE:SILICON,30V,50NA | 80009 | 152-0141-02 |
| A8CR8044 | 152-0141-02 | | | SEMICOND DEVICE:SILICON,30V,50NA | 80009 | 152-0141-02 |
| A8CR8046 | 152-0141-02 | | | SEMICOND DEVICE:SILICON,30V,50NA | 80009 | 152-0141-02 |
| A8CR8048 | 152-0141-02 | | | SEMICOND DEVICE:SILICON,30V,50NA | 80009 | 152-0141-02 |
| A8CR8066 | 152-0141-02 | | | SEMICOND DEVICE:SILICON,30V,50NA | 80009 | 152-0141-02 |
| A8Q8067 | 151-0301-00 | | | TRANSISTOR:SILICON,PNP | 04713 | 2N2907A |
| A8R8033 | 321-0228-00 | | | RES.,FXD,FILM:2.32K OHM,1%,0.125W | 91637 | MFF1816G23200F |
| A8R8035 | 321-0201-00 | | | RES.,FXD,FILM:1.21K OHM,1%,0.125W | 91637 | MFF1816G12100F |
| A8R8036 | 315-0363-00 | | | RES.,FXD,CMPSN:36K OHM,5%,0.25W | 01121 | CB3635 |
| A8R8054 | 323-0140-00 | | | RES.,FXD,FILM:280 OHM,1%,0.50W | 75042 | CECT0-2800F |
| A8R8056 | 323-0140-00 | | | RES.,FXD,FILM:280 OHM,1%,0.50W | 75042 | CECT0-2800F |
| A8R8058 | 303-0150-00 | | | RES.,FXD,CMPSN:15 OHM,5%,1W | 01121 | GB1505 |
| A8R8065 | 321-0062-00 | | | RES.,FXD,FILM:43.2 OHM,1%,0.125W | 91637 | MFF1816G43R20F |
| A8RT8038 | 307-0124-00 | | | RES.,THERMAL:5K OHM,10% | 50157 | 1D1613 |
| A8U8061 | 156-0281-00 | | | MICROCIRCUIT,LI:4 TRANSISTOR ARRAY | 80009 | 156-0281-00 |

| Component No. | Tektronix Part No. | Serial/Model No. Eff | Dscont | Name & Description | Mfr Code | Mfr Part Number |
|---|---|---|---|---|---|---|
| A9 | ----- ----- | | | CKT BOARD ASSY:PROBE CODING | | |
| A9DS9040 | 150-1063-00 | | | LT EMITTING DIO:YELLOW,585NM,40MA | 50522 | MAN4610A |
| A9DS9060 | 150-1063-00 | | | LT EMITTING DIO:YELLOW,585NM,40MA | 50522 | MAN4610A |
| A10 | ----- ----- | | | CKT BOARD ASSY:CRT SCALE ILLUMINATION | | |
| A10DS14086 | 150-0129-00 | | | LAMP,INCAND:6.3V,200MA | 08806 | 2112D |
| A10DS14087 | 150-0129-00 | | | LAMP,INCAND:6.3V,200MA | 08806 | 2112D |
| | | | | CHASSIS PARTS | | |
| C30 | 307-1014-01 | | | ATTENUATOR,FXD:100X | 80009 | 307-1014-01 |
| C31 | 307-1014-01 | | | ATTENUATOR,FXD:100X | 80009 | 307-1014-01 |
| C32 | 307-1013-01 | | | ATTENUATOR,FXD:10X | 80009 | 307-1013-01 |
| C33 | 307-1013-01 | | | ATTENUATOR,FXD:10X | 80009 | 307-1013-01 |
| C34 | 307-1011-00 | | | ATTENUATOR,FXD:4X | 80009 | 307-1011-00 |
| C35 | 307-1011-00 | | | ATTENUATOR,FXD:4X | 80009 | 307-1011-00 |
| C36 | 307-1010-01 | | | ATTENUATOR,FXD:2X | 80009 | 307-1010-01 |
| C37 | 307-1010-01 | | | ATTENUATOR,FXD:2X | 80009 | 307-1010-01 |
| C13010 | 281-0064-00 | | | CAP.,VAR,PLSTC:0.25-1.5PF,600V | 72982 | 530-002 |
| C13012 | 285-0816-01 | | | CAP.,FXD,PLSTC:0.01UF,10%,600V | 80009 | 285-0816-01 |
| C15101 | 283-0000-00 | | | CAP.,FXD,CER DI:0.001UF,+100-0%,500V | 72982 | 831-516E102P |
| C15103 | 283-0000-00 | | | CAP.,FXD,CER DI:0.001UF,+100-0%,500V | 72982 | 831-516E102P |
| CR14498 | 152-0333-00 | | | SEMICOND DEVICE:SILICON,55V,200MA | 80009 | 152-0333-00 |
| DL11405 | 119-0387-00 | | | DELAY LINE,ELEC:120NS,100 OHM | 80009 | 119-0387-00 |
| DS15034 | 150-1001-02 | | | LAMP,LED:RED,2V,100MA | 07263 | FLV160 |
| DS15036 | 150-1001-02 | | | LAMP,LED:RED,2V,100MA | 07263 | FLV160 |
| DS15038 | 150-1001-02 | | | LAMP,LED:RED,2V,100MA | 07263 | FLV160 |
| DS16001 | 150-1001-02 | | | LAMP,LED:RED,2V,100MA | 07263 | FLV160 |
| DS16002 | 150-1001-02 | | | LAMP,LED:RED,2V,100MA | 07263 | FLV160 |
| DS17105 | 150-1017-00 | | | LAMP,LED:55MA,GREEN | 50437 | OSL-16L-100 |
| DS17127 | 150-1032-00 | | | LAMP,LED:YELLOW,10 MA | 53184 | XC5566Y |
| DS17206 | 150-1001-02 | | | LAMP,LED:RED,2V,100MA | 07263 | FLV160 |
| F14500 | 159-0016-00 | | | FUSE,CARTRIDGE:3AG,1.5A,250V,FAST-BLOW | 71400 | AGC 1 1/2 |
| L14165 | 108-0714-00 | | | COIL,TUBE DEFLE:Y AXIS ALIGNMENT | 80009 | 108-0714-00 |
| L14176 | 108-0713-00 | | | COIL,TUBE DEFLE:TRACE ROTATION | 80009 | 108-0713-00 |
| Q14009 | 151-0140-00 | | | TRANSISTOR:SILICON,NPN | 80009 | 151-0140-00 |
| Q4102 | 151-0349-00 | | | TRANSISTOR:SILICON,NPN,SEL FROM MJE2801 | 80009 | 151-0349-00 |
| Q4190 | 151-0390-00 | | | TRANSISTOR:SILICON,NPN | 80009 | 151-0390-00 |
| Q4301 | 151-0436-00 | | | TRANSISTOR:SILICON,NPN | 80009 | 151-0436-00 |
| Q4312 | 151-0390-00 | | | TRANSISTOR:SILICON,NPN | 80009 | 151-0390-00 |
| Q4401 | 151-0349-00 | | | TRANSISTOR:SILICON,NPN,SEL FROM MJE2801 | 80009 | 151-0349-00 |
| R13010 | 315-0750-00 | | | RES.,FXD,CMPSN:75 OHM,5%,0.25W | 01121 | CB7505 |
| R14288 | 311-2047-00 | | | RES.,VAR,NONWIR:PNL,50K/5K OHM,20%,1.0W | 12697 | CM41749 |
| R14398 | 311-1482-00 | | | RES.,VAR,NONWIR:5K OHM,20%,0.50W | 01121 | W-8070 |
| R14498 | 311-1410-00 | | | RES.,VAR,NONWIR:25K OHM,20%,1W | 01121 | 10M923 |
| R14518 | 311-1482-00 | | | RES.,VAR,NONWIR:5K OHM,20%,0.50W | 01121 | W-8070 |
| R15102 | 311-0608-00 | | | RES.,VAR,NONWIR:2K OHM,10%,0.75W | 01121 | W8156 |

| Component No. | Tektronix Part No. | Serial/Model No. Eff | Dscont | Name & Description | Mfr Code | Mfr Part Number |
|---|---|---|---|---|---|---|
| R16002 | 311-1464-00 | | | RES.,VAR,WW:2K OHM,5%,2W | 02111 | 534-264 |
| R17010 | 311-1192-00 | | | RES.,VAR,NONWIR:10K OHM,20%,1W | 71590 | BA-232-001 |
| R17305 | 311-1192-00 | | | RES.,VAR,NONWIR:10K OHM,20%,1W | 71590 | BA-232-001 |
| R6155 | 311-1701-00 | | | RES.,VAR,NONWIR:PNL,50K OHM,1W,W/SW | 01121 | 13M213 |
| S14398 | ----- ----- | | | (SEE R14398) | | |
| S14500 | 260-1300-01 | | | SWITCH,SLIDE:DPDT,3A,125V | 82389 | 11A-1354 |
| S14510 | 260-0834-00 | | | SWITCH,TOGGLE:DPDT,5A,125VAC,0.25-40 THD | 09353 | U21-SHZQE |
| S14520 | 260-0638-00 | | | SW,THERMOSTATIC:10A,240V,OPEN 75 DEG C | 93410 | 110-364 |
| S17010 | ----- ----- | | | (SEE R17010) | | |
| S17305 | ----- ----- | | | (SEE R17305) | | |
| S6111 | 263-1176-00 | | | SW CAM ACTR AS:TIME/DV | 80009 | 263-1176-00 |
| S6155 | ----- ----- | | | (SEE R6155) | | |
| T14500 | 120-0798-01 | | | XFMR,PWR,STPDN: | 80009 | 120-0798-01 |
| V14000 | 154-0731-00 | | | ELECTRON TUBE:W/ANODE LEAD | 80009 | 154-0731-00 |

# REPLACEABLE MECHANICAL PARTS

## PARTS ORDERING INFORMATION

Replacement parts are available from or through your local Tektronix, Inc. Field Office or representative.

Changes to Tektronix instruments are sometimes made to accommodate improved components as they become available, and to give you the benefit of the latest circuit improvements developed in our engineering department. It is therefore important, when ordering parts, to include the following information in your order: Part number, instrument type or number, serial number, and modification number if applicable.

If a part you have ordered has been replaced with a new or improved part, your local Tektronix, Inc. Field Office or representative will contact you concerning any change in part number.

Change information, if any, is located at the rear of this manual.

## SPECIAL NOTES AND SYMBOLS

| | |
|---|---|
| X000 | Part first added at this serial number |
| 00X | Part removed after this serial number |

## FIGURE AND INDEX NUMBERS

Items in this section are referenced by figure and index numbers to the illustrations.

## INDENTATION SYSTEM

This mechanical parts list is indented to indicate item relationships. Following is an example of the indentation system used in the description column.

*1 2 3 4 5 Name & Description*

*Assembly and/or Component*
*Attaching parts for Assembly and/or Component*
- - - ' - - -
*Detail Part of Assembly and/or Component*
*Attaching parts for Detail Part*
- - - ' - - -
*Parts of Detail Part*
*Attaching parts for Parts of Detail Part*
- - - ' - - -

Attaching Parts always appear in the same indentation as the item it mounts, while the detail parts are indented to the right. Indented items are part of, and included with, the next higher indentation. The separation symbol - - - ' - - - indicates the end of attaching parts.

**Attaching parts must be purchased separately, unless otherwise specified.**

## ITEM NAME

In the Parts List, an Item Name is separated from the description by a colon (:). Because of space limitations, an Item Name may sometimes appear as incomplete. For further Item Name identification, the U.S. Federal Cataloging Handbook H6-1 can be utilized where possible.

## ABBREVIATIONS

| | |
|---|---|
| " | INCH |
| # | NUMBER SIZE |
| ACTR | ACTUATOR |
| ADPTR | ADAPTER |
| ALIGN | ALIGNMENT |
| AL | ALUMINUM |
| ASSEM | ASSEMBLED |
| ASSY | ASSEMBLY |
| ATTEN | ATTENUATOR |
| AWG | AMERICAN WIRE GAGE |
| BD | BOARD |
| BRKT | BRACKET |
| BRS | BRASS |
| BRZ | BRONZE |
| BSHG | BUSHING |
| CAB | CABINET |
| CAP | CAPACITOR |
| CER | CERAMIC |
| CHAS | CHASSIS |
| CKT | CIRCUIT |
| COMP | COMPOSITION |
| CONN | CONNECTOR |
| COV | COVER |
| CPLG | COUPLING |
| CRT | CATHODE RAY TUBE |
| DEG | DEGREE |
| DWR | DRAWER |
| ELCTRN | ELECTRON |
| ELEC | ELECTRICAL |
| ELCTLT | ELECTROLYTIC |
| ELEM | ELEMENT |
| EPL | ELECTRICAL PARTS LIST |
| EQPT | EQUIPMENT |
| EXT | EXTERNAL |
| FIL | FILLISTER HEAD |
| FLEX | FLEXIBLE |
| FLH | FLAT HEAD |
| FLTR | FILTER |
| FR | FRAME or FRONT |
| FSTNR | FASTENER |
| FT | FOOT |
| FXD | FIXED |
| GSKT | GASKET |
| HDL | HANDLE |
| HEX | HEXAGON |
| HEX HD | HEXAGONAL HEAD |
| HEX SOC | HEXAGONAL SOCKET |
| HLCPS | HELICAL COMPRESSION |
| HLEXT | HELICAL EXTENSION |
| HV | HIGH VOLTAGE |
| IC | INTEGRATED CIRCUIT |
| ID | INSIDE DIAMETER |
| IDENT | IDENTIFICATION |
| IMPLR | IMPELLER |
| IN | INCH |
| INCAND | INCANDESCENT |
| INSUL | INSULATOR |
| INTL | INTERNAL |
| LPHLDR | LAMPHOLDER |
| MACH | MACHINE |
| MECH | MECHANICAL |
| MTG | MOUNTING |
| NIP | NIPPLE |
| NON WIRE | NOT WIRE WOUND |
| OBD | ORDER BY DESCRIPTION |
| OD | OUTSIDE DIAMETER |
| OVH | OVAL HEAD |
| PH BRZ | PHOSPHOR BRONZE |
| PL | PLAIN or PLATE |
| PLSTC | PLASTIC |
| PN | PART NUMBER |
| PNH | PAN HEAD |
| PWR | POWER |
| RCPT | RECEPTACLE |
| RES | RESISTOR |
| RGD | RIGID |
| RLF | RELIEF |
| RTNR | RETAINER |
| SCH | SOCKET HEAD |
| SCOPE | OSCILLOSCOPE |
| SCR | SCREW |
| SE | SINGLE END |
| SECT | SECTION |
| SEMICOND | SEMICONDUCTOR |
| SHLD | SHIELD |
| SHLDR | SHOULDERED |
| SKT | SOCKET |
| SL | SLIDE |
| SLFLKG | SELF-LOCKING |
| SLVG | SLEEVING |
| SPR | SPRING |
| SQ | SQUARE |
| SST | STAINLESS STEEL |
| STL | STEEL |
| SW | SWITCH |
| T | TUBE |
| TERM | TERMINAL |
| THD | THREAD |
| THK | THICK |
| TNSN | TENSION |
| TPG | TAPPING |
| TRH | TRUSS HEAD |
| V | VOLTAGE |
| VAR | VARIABLE |
| W/ | WITH |
| WSHR | WASHER |
| XFMR | TRANSFORMER |
| XSTR | TRANSISTOR |

## CROSS INDEX—MFR. CODE NUMBER TO MANUFACTURER

| Mfr. Code | Manufacturer | Address | City, State, Zip |
|---|---|---|---|
| 000BK | STAUFFER SUPPLY | 105 SE TAYLOR | PORTLAND, OR 97214 |
| 000CY | NORTHWEST FASTENER SALES, INC. | 7923 SW CIRRUS DRIVE | BEAVERTON, OREGON 97005 |
| 000EX | O'HARA METAL PRODUCT COMPANY | 542 BRANNAN STREET | SAN FRANCISCO, CA 94107 |
| 00779 | AMP, INC. | P O BOX 3608 | HARRISBURG, PA 17105 |
| 01295 | TEXAS INSTRUMENTS, INC., SEMICONDUCTOR GROUP | P O BOX 5012, 13500 N CENTRAL EXPRESSWAY | DALLAS, TX 75222 |
| 01963 | CHERRY ELECTRICAL PRODUCTS CORPORATION | 3600 SUNSET AVENUE | WAUKEGAN, IL 60085 |
| 05006 | TWENTIETH CENTURY PLASTICS, INC. | 415 E WASHINGTON BLVD. | LOS ANGELES, CA 90015 |
| 05129 | KILO ENGINEERING COMPANY | 2015 D | LA VERNE, CA 91750 |
| 06540 | AMATOM ELECTRONIC HARDWARE, DIV. OF MITE CORP. | 446 BLAKE ST. | NEW HAVEN, CT 06515 |
| 06666 | GENERAL DEVICES CO., INC. | 525 S. WEBSTER AVE. | INDIANAPOLIS, IN 46219 |
| 07700 | TECHNICAL WIRE AND PRODUCTS, INC. | 129 DERMODY ST. | CRANFORD, NJ 07016 |
| 08261 | SPECTRA-STRIP CORP. | 7100 LAMPSON AVE. | GARDEN GROVE, CA 92642 |
| 08530 | RELIANCE MICA CORP. | 342-39TH ST. | BROOKLYN, NY 11232 |
| 12014 | CHICAGO RIVET AND MACHINE CO. | 950 S. 25TH AVENUE | BELLWOOD, IL 60104 |
| 12327 | FREEWAY CORPORATION | 9301 ALLEN DRIVE | CLEVELAND, OH 44125 |
| 12360 | ALBANY PRODUCTS CO., DIV. OF PNEUMO DYNAMICS CORPORATION | 145 WOODWARD AVENUE | SOUTH NORWALK, CT 06586 |
| 13511 | AMPHENOL CARDRE DIV., BUNKER RAMO CORP. | | LOS GATOS, CA 95030 |
| 16428 | BELDEN CORP. | P. O. BOX 1331 | RICHMOND, IN 47374 |
| 22526 | BERG ELECTRONICS, INC. | YOUK EXPRESSWAY | NEW CUMBERLAND, PA 17070 |
| 23050 | PRODUCT COMPONENTS CORP | 30 LORRAINE AVE. | MT VERNON, NY 10553 |
| 24011 | ELECTRONIZED CHEMICALS CORPORATION | S BEDFORD STREET | BURLINGTON, MA 01803 |
| 24931 | SPECIALTY CONNECTOR CO., INC. | 3560 MADISON AVE. | INDIANAPOLIS, IN 46227 |
| 27143 | ATLAS SPRING AND MFG. CO. | 1805 N. SPAULDING AVE. | CHICAGO, IL 60647 |
| 28520 | HEYMAN MFG. CO. | 147 N. MICHIGAN AVE. | KENILWORTH, NJ 07033 |
| 28817 | CAL-METEX CORP., SUBSIDIARY OF METEX CORP. | 509 HINDRY AVE. | INGLEWOOD, CA 90301 |
| 42838 | NATIONAL RIVET AND MFG. CO. | 1-21 EAST JEFFERSON ST. | WAUPUN, WI 53963 |
| 51316 | ANGELUS WASHER AND STAMPING CO. | 1411 ESPERANZA ST. | LOS ANGELES, CA 90023 |
| 55210 | GETTIG ENG. AND MFG. COMPANY | PO BOX 85, OFF ROUTE 45 | SPRING MILLS, PA 16875 |
| 56878 | STANDARD PRESSED STEEL COMPANY | BENSON EAST | JENKINTOWN, PA 19046 |
| 63743 | WARD LEONARD ELECTRIC CO., INC. | 31 SOUTH ST. | MOUNT VERNON, NY 10550 |
| 70278 | ALLIED STEEL AND CONVEYORS, DIV. OF SPARTON CORP. | 17333 HEALY | DETROIT, MI 48212 |
| 70485 | ATLANTIC INDIA RUBBER WORKS, INC. | 571 W. POLK ST. | CHICAGO, IL 60607 |
| 71279 | CAMBRIDGE THERMIONIC CORP. | 445 CONCORD AVE. | CAMBRIDGE, MA 02138 |
| 71400 | BUSSMAN MFG., DIVISION OF MCGRAW-EDISON CO. | 2536 W. UNIVERSITY ST. | ST. LOUIS, MO 63107 |
| 71590 | CENTRALAB ELECTRONICS, DIV. OF GLOBE-UNION, INC. | P O BOX 858 | FORT DODGE, IA 50501 |
| 73743 | FISCHER SPECIAL MFG. CO. | 446 MORGAN ST. | CINCINNATI, OH 45206 |
| 73803 | TEXAS INSTRUMENTS, INC., METALLURGICAL MATERIALS DIV. | 34 FOREST STREET | ATTLEBORO, MA 02703 |
| 74445 | HOLO-KROME CO. | 31 BROOK ST. WEST | HARTFORD, CT 06110 |
| 75497 | LAMSON AND SESSIONS CO. | 5000 TIEDEMAN ROAD | CLEVELAND, OH 44144 |
| 75915 | LITTELFUSE, INC. | 800 E. NORTHWEST HWY | DES PLAINES, IL 60016 |
| 77250 | PHEOLL MANUFACTURING CO., DIVISION OF ALLIED PRODUCTS CORP. | 5700 W. ROOSEVELT RD. | CHICAGO, IL 60650 |
| 78189 | ILLINOIS TOOL WORKS, INC. SHAKEPROOF DIVISION | ST. CHARLES ROAD | ELGIN, IL 60120 |
| 79136 | WALDES, KOHINOOR, INC. | 47-16 AUSTEL PLACE | LONG ISLAND CITY, NY 11101 |
| 79807 | WROUGHT WASHER MFG. CO. | 2100 S. O BAY ST. | MILWAUKEE, WI 53207 |
| 80009 | TEKTRONIX, INC. | P O BOX 500 | BEAVERTON, OR 97077 |
| 80033 | PRESTOLE EVERLOCK, INC. | P. O. BOX 278,1345 MIAMI ST. | TOLEDO, OH 43605 |
| 82647 | TEXAS INSTRUMENTS, INC., CONTROL PRODUCTS DIV. | 34 FOREST ST. | ATTLEBORO, MA 02703 |
| 83385 | CENTRAL SCREW CO. | 2530 CRESCENT DR. | BROADVIEW, IL 60153 |
| 83486 | ELCO INDUSTRIES, INC. | 1103 SAMUELSON ROAD | ROCKFORD, IL 61101 |
| 86445 | PENN FIBRE AND SPECIALTY CO., INC. | 2032 E. WESTMORELAND ST. | PHILADELPHIA, PA 19134 |
| 86928 | SEASTROM MFG. COMPANY, INC. | 701 SONORA AVENUE | GLENDALE, CA 91201 |
| 89663 | REESE, J. RAMSEY, INC. | 71 MURRAY STREET | NEW YORK, NY 10007 |
| 91260 | CONNOR SPRING AND MFG. CO. | 1729 JUNCTION AVE. | SAN JOSE, CA 95112 |
| 93907 | CAMCAR SCREW AND MFG. CO. | 600 18TH AVE. | ROCKFORD, IL 61101 |
| 95987 | WECKESSER CO., INC. | 4444 WEST IRVING PARK RD. | CHICAGO, IL 60641 |
| 97464 | INDUSTRIAL RETAINING RING CO. | 57 CORDIER ST. | IRVINGTON, NJ 07111 |

| Fig. & Index No. | Tektronix Part No. | Serial/Model No. Eff | Dscont | Qty | 1 2 3 4 5 Name & Description | Mfr Code | Mfr Part Number |
|---|---|---|---|---|---|---|---|
| 1-1 | 200-1411-00 | | | 1 | RTNR,IMPLOSION:5.422 X 4.743X 0.441,GRAY | 80009 | 200-1411-00 |
| -2 | 213-0313-00 | | | 4 | . THUMBSCREW:4-40 X 0.45 INCH,KNURLED | 80009 | 213-0313-00 |
| -3 | 337-1674-00 | | | 1 | SHLD,ELCTRN TUB:CRT | 80009 | 337-1674-00 |
| -4 | 366-0494-00 | | | 5 | KNOB:GRAY WITH SETSCREW | 80009 | 366-0494-00 |
| | 213-0153-00 | | | 1 | . SETSCREW:5-40 X 0.125,STL BK OXD,HEX | 000CY | OBD |
| -5 | 366-1031-02 | | | 2 | KNOB:RED-VAR | 80009 | 366-1031-02 |
| | 213-0153-00 | | | 1 | . SETSCREW:5-40 X 0.125,STL BK OXD,HEX | 000CY | OBD |
| -6 | 366-1426-00 | | | 2 | KNOB:GRAY | 80009 | 366-1426-00 |
| | 213-0153-00 | | | 1 | . SETSCREW:5-40 X 0.125,STL BK OXD,HEX | 000CY | OBD |
| -7 | 366-0215-02 | | | 2 | KNOB:LEVER SWITCH | 80009 | 366-0215-02 |
| -8 | 366-1559-00 | | | 16 | PUSH BUTTON:GRAY | 80009 | 366-1559-00 |
| -9 | 366-1023-01 | | | 3 | KNOB:GRAY | 80009 | 366-1023-01 |
| | 213-0153-00 | | | 1 | . SETSCREW:5-40 X 0.125,STL BK OXD,HEX | 000CY | OBD |
| -10 | 366-1327-00 | | | 1 | KNOB:GRAY | 80009 | 366-1327-00 |
| | 213-0153-00 | | | 1 | . SETSCREW:5-40 X 0.125,STL BK OXD,HEX | 000CY | OBD |
| -11 | 331-0328-00 | | | 1 | DIAL,CONTROL:10 TURN FOR 0.25 DIA SHAFT | 05129 | 461-S-70 |
| | 213-0048-00 | | | 1 | . SETSCREW:4-40 X 0.125 INCH,HEX SOC STL | 74445 | OBD |
| -12 | 366-1346-02 | | | 1 | KNOB:RED | 80009 | 366-1346-00 |
| | 213-0153-00 | | | 1 | . SETSCREW:5-40 X 0.125,STL BK OXD,HEX | 000CY | OBD |
| -13 | 366-1219-01 | | | 1 | KNOB:GRAY--DLYD SWP | 80009 | 366-1219-01 |
| | 213-0153-00 | | | 2 | . SETSCREW:5-40 X 0.125,STL BK OXD,HEX | 000CY | OBD |
| -14 | 354-0442-01 | | | 1 | RING,KNOB SKIRT:CLEAR,1.45 OD | 80009 | 354-0442-01 |
| | 213-0005-00 | | | 1 | . SETSCREW:8-32 X 1.25 INCH,HEX SOC STL | 74445 | OBD |
| -15 | 401-0080-00 | | | 1 | BRG,KNOB SKIRT:0.789 ID X 0.866"OD PLASTIC | 80009 | 401-0080-00 |
| -16 | 366-0494-00 | | | 3 | KNOB:GRAY WITH SETSCREW | 80009 | 366-0494-00 |
| | 213-0153-00 | | | 1 | . SETSCREW:5-40 X 0.125,STL BK OXD,HEX | 000CY | OBD |
| -17 | 366-1278-00 | | | 2 | KNOB:GRAY | 80009 | 366-1278-00 |
| | 213-0153-00 | | | 1 | . SETSCREW:5-40 X 0.125,STL BK OXD,HEX | 000CY | OBD |
| -18 | 366-1280-00 | | | 2 | KNOB:GRAY | 80009 | 366-1278-00 |
| | 213-0153-00 | | | 1 | . SETSCREW:5-40 X 0.125,STL BK OXD,HEX | 000CY | OBD |
| -19 | 426-1072-00 | | | 16 | FRAME,PUSH BTN:PLASTIC | 80009 | 426-1072-00 |
| -20 | 358-0216-00 | | | 1 | BUSHING,PLASTIC:0.257 ID X 0.412 INCH OD | 80009 | 358-0216-00 |
| -21 | 358-0599-00 | | | 5 | BUSHING,SLEEVE:0.125 ID X 0.234 THK,PLSTC | 28520 | B-187-125 |
| -22 | 358-0540-00 | | | 2 | BSHG,MACH.THD:0.25-32 X 0.128 ID X 0.24" L | 80009 | 358-0540-00 |
| | | | | | (ATTACHING PARTS FOR EACH) | | |
| -23 | 210-0583-00 | | | 1 | NUT,PLAIN,HEX.:0.25-32 X 0.312 INCH,BRS | 73743 | 2X20224-402 |
| -24 | 210-0940-00 | | | 1 | WASHER,FLAT:0.25 ID X 0.375 INCH OD,STL | 79807 | OBD |
| | | | | | - - - * - - - | | |
| -25 | 378-0635-00 | | | 4 | LENS,LIGHT:WHITE | 80009 | 378-0635-00 |
| -26 | ----- ----- | | | 1 | RES.,VAR,NONWIR:(SEE R16002 EPL) | | |
| -27 | ----- ----- | | | 1 | RES.,VAR,NONWIR:(SEE R14288,R14289 EPL) | | |
| | | | | | (ATTACHING PARTS) | | |
| -28 | 210-0583-00 | | | 1 | NUT,PLAIN,HEX.:0.25-32 X 0.312 INCH,BRS | 73743 | 2X20224-402 |
| -29 | 210-0940-00 | | | 1 | WASHER,FLAT:0.25 ID X 0.375 INCH OD,STL | 79807 | OBD |
| | | | | | - - - * - - - | | |
| -30 | ----- ----- | | | 1 | RES.,VAR,NONWIR:(SEE R14398 EPL) | | |
| | | | | | (ATTACHING PARTS) | | |
| -31 | 210-0583-00 | | | 1 | NUT,PLAIN,HEX.:0.25-32 X 0.312 INCH,BRS | 73743 | 2X20224-402 |
| -32 | 210-0940-00 | | | 1 | WASHER,FLAT:0.25 ID X 0.375 INCH OD,STL | 79807 | OBD |
| | | | | | - - - * - - - | | |
| -33 | 210-0046-00 | | | 1 | WASHER,LOCK:INTL,0.26 ID X 0.40" OD,STL | 78189 | 1214-05-00-0541C |
| -34 | ----- ----- | | | 1 | RES.,VAR,NONWIR:(SEE R15102 EPL) | | |
| | | | | | (ATTACHING PARTS) | | |
| -35 | 210-0583-00 | | | 1 | NUT,PLAIN,HEX.:0.25-32 X 0.312 INCH,BRS | 73743 | 2X20224-402 |
| -36 | 210-0940-00 | | | 1 | WASHER,FLAT:0.25 ID X 0.375 INCH OD,STL | 79807 | OBD |
| | | | | | - - - * - - - | | |
| -37 | 210-0046-00 | | | 1 | WASHER,LOCK:INTL,0.26 ID X 0.40" OD,STL | 78189 | 1214-05-00-0541C |
| -38 | ----- ----- | | | 1 | RES.,VAR,NONWIR:(SEE R14498 EPL) | | |
| | | | | | (ATTACHING PARTS) | | |
| -39 | 210-0583-00 | | | 1 | NUT,PLAIN,HEX.:0.25-32 X 0.312 INCH,BRS | 73743 | 2X20224-402 |
| -40 | 210-0940-00 | | | 1 | WASHER,FLAT:0.25 ID X 0.375 INCH OD,STL | 79807 | OBD |
| | | | | | - - - * - - - | | |
| -41 | ----- ----- | | | 2 | RES.,VAR,NONWIR:(SEE R17105,R17305 EPL) | | |
| | | | | | (ATTACHING PARTS FOR EACH) | | |
| -42 | 210-0583-00 | | | 1 | NUT,PLAIN,HEX.:0.25-32 X 0.312 INCH,BRS | 73743 | 2X20224-402 |
| -43 | 210-0940-00 | | | 1 | WASHER,FLAT:0.25 ID X 0.375 INCH OD,STL | 79807 | OBD |
| | | | | | - - - * - - - | | |

| Fig. & Index No. | Tektronix Part No. | Serial/Model No. Eff | Dscont | Qty | 1 2 3 4 5 Name & Description | Mfr Code | Mfr Part Number |
|---|---|---|---|---|---|---|---|
| 1-44 | 333-2524-00 | | | 1 | PANEL,FRONT: | 80009 | 333-2524-00 |
| -45 | 352-0477-00 | | | 8 | HOLDER,LED: | 80009 | 352-0477-00 |
| -46 | 131-0955-00 | | | 2 | CONNECTOR,RCPT,:BNC,FEMALE,W/HARDWARE | 13511 | 31-279 |
| -47 | 386-2340-00 | | | 4 | SUPPORT,CRT:FRONT | 80009 | 386-2340-00 |
| -48 | ----- ----- | | | 1 | CKT BOARD ASSY:GRATICULE ILLUM(SEE A10 EPL) | | |
| -49 | 378-0728-00 | | | 1 | . REFLECTOR,LIGHT:SCALE ILLUMINATION | 80009 | 378-0728-00 |
| -50 | 352-0329-00 | | | 1 | . LAMPHOLDER:SCALE ILLUMINATION | 80009 | 352-0329-00 |
| | 198-2862-00 | | | 1 | . WIRE SET,ELEC: | 80009 | 198-2862-00 |
| -51 | 175-0825-00 | | | FT | . . WIRE,ELECTRICAL:2 WIRE RIBBON | 80009 | 175-0825-00 |
| -52 | 131-0707-00 | | | 2 | . . CONNECTOR,TERM.:22-26 AWG,BRS& CU BE GOLD | 22526 | 47439 |
| -53 | 352-0169-02 | | | 1 | . . CONN BODY,PL,EL:2 WIRE RED | 80009 | 352-0169-00 |
| -54 | 348-0276-00 | | | FT | SHLD GSKT,ELEC:0.026 OD NPRNW/WIRE NET CO | 28817 | 01-0404-3719 |
| -55 | 426-1607-00 | | | 1 | FRAME,CABINET:FRONT | 80009 | 426-1607-00 |
| | | | | | (ATTACHING PARTS) | | |
| -56 | 213-0183-00 | | | 4 | SCR,TPG,THD FOR:6-20 X 0.5 TYPE B,PNH,STL | 83385 | OBD |
| | | | | | - - - * - - - | | |
| -57 | 129-0385-00 | | | 1 | POST,ELEC-MECH:0.250 HEX X 1.77 INCH LONG | 80009 | 129-0385-00 |
| -58 | 348-0115-00 | | | 1 | GROMMET,PLASTIC:U-SHP,0.548 X0.462 INCH | 80009 | 348-0115-00 |
| -59 | 337-1688-03 | | | 1 | SHIELD,ELEC:HIGH VOLTAGE | 80009 | 337-1688-03 |
| | | | | | (ATTACHING PARTS) | | |
| -60 | 211-0065-00 | | | 3 | SCREW,MACHINE:4-40 X 0.188 INCH,PNH STL | 77250 | OBD |
| -61 | ----- ----- | | | 1 | CKT BOARD ASSY:FAN MOTOR(SEE A8 EPL) | | |
| -62 | 131-0608-00 | | | 2 | . TERMINAL,PIN:0.365 L X 0.25 PH,BRZ,GOLD PL | 22526 | 47357 |
| -63 | 136-0252-04 | | | 3 | . SOCKET,PIN TERM:0.188 INCH LONG | 22526 | 75060 |
| -64 | 136-0269-02 | | | 1 | . SOCKET,PLUG-IN:14 CONTACT,LOW CLEARANCE | 01295 | C95140 |
| -65 | ----- ----- | | | 1 | . MOTOR,DC:(SEE B8045 EPL) | | |
| -66 | 426-0781-00 | | | 1 | . MOUNT,MOTOR: | 80009 | 426-0781-00 |
| | | | | | (ATTACHING PARTS) | | |
| -67 | 213-0088-00 | | | 2 | SCR,TPG,THD CTG:4-24 X 0.25 INCH,PNH STL | 83385 | OBD |
| | | | | | - - - * - - - | | |
| -68 | 337-1762-00 | | | 1 | SHLD,ELECTRICAL:FAN MOTOR | 80009 | 337-1762-00 |
| -69 | 426-0781-00 | | | 1 | MOUNT,MOTOR: | 80009 | 426-0781-00 |
| | | | | | (ATTACHING PARTS) | | |
| -70 | 213-0088-00 | | | 2 | SCR,TPG,THD CTG:4-24 X 0.25 INCH,PNH STL | 83385 | OBD |
| | | | | | - - - * - - - | | |
| | 644-0150-00 | | | 1 | XSTR BRKT ASSY: | 80009 | 644-0150-00 |
| | | | | | (ATTACHING PARTS) | | |
| -71 | 210-0586-00 | | | 2 | NUT,PLAIN,EXT W:4-40 X 0.25 INCH,STL | 78189 | 211-041800-00 |
| | | | | | - - - * - - - | | |
| | ----- ----- | | | - | . TRANS BRKT ASSY INCLUDES: | | |
| -72 | ----- ----- | | | - | . TRANSISTOR:(SEE Q14009 EPL) | | |
| | | | | | (ATTACHING PARTS) | | |
| -73 | 211-0012-00 | | | 2 | . SCREW,MACHINE:4-40 X 0.375 INCH,PNH STL | 83385 | OBD |
| -74 | 358-0214-00 | | | 2 | . INSULATOR,BSHG:0.25 DIA X 0.188 INCH L | 24011 | OBD |
| -75 | 210-0205-00 | | | 1 | . TERMINAL,LUG:SE #8 | 78189 | 2104-08-00-2520N |
| | | | | | - - - * - - - | | |
| -76 | 214-1610-00 | | | 1 | . HEAT SINK,ELEC:TRANSISTOR | 80009 | 214-1610-00 |
| -77 | 407-1153-00 | | | 1 | . BRACKET,XSTR:ALUMINUM | 80009 | 407-1153-00 |
| -78 | 348-0253-00 | | | 1 | GROMMET,PLASTIC:1.24 X 0.739 X 0.108" OA | 80009 | 348-0253-00 |
| -79 | 348-0064-00 | | | 2 | GROMMET,PLASTIC:0.625 INCH DIA | 80009 | 348-0064-00 |
| -80 | 348-0056-00 | | | 1 | GROMMET,PLASTIC:0.375 INCH DIA | 80009 | 348-0056-00 |
| | 348-0442-00 | | | 1 | GROMMET,PLASTIC:BLACK,ROUND,0.375 ID | 80009 | 348-0442-00 |
| | 348-0517-00 | | | 2 | GROMMET,PLASTIC:BLACK,ROUND,0.25 ID | 28520 | SB-375-4 |
| | 348-0518-00 | | | 2 | GROMMET,PLASTIC:BLACK,ROUND,0.5 ID | 28520 | SB-625-8 |
| | 358-0540-00 | | | 2 | BSHG,MACH THD:0.25-32 X 0.128 ID X 0.24L | 80009 | 358-0540-00 |
| -81 | 407-1138-00 | | | 1 | BRKT,DELAY LINE:ALUMINUM | 80009 | 407-1138-00 |
| | | | | | (ATTACHING PARTS) | | |
| -82 | 210-0457-00 | | | 1 | NUT,PLAIN,EXT W:6-32 X 0.312 INCH,STL | 83385 | OBD |
| | | | | | - - - * - - - | | |
| | 343-0144-00 | | | 1 | CLAMP,LOOP:0.125 INCH ID,BLK NYLON | 95987 | 1-8-2 |
| -83 | ----- ----- | | | 1 | DELAY LINE:(SEE DL11405 EPL) | | |
| | 131-1002-02 | | | 1 | . CONN,DELAY LINE: | 80009 | 131-1002-02 |
| | 131-1313-00 | | | 1 | . RETAINER,WIRE,E:DELAY LINE TERMINAL | 80009 | 131-1313-00 |
| -84 | ----- ----- | | | 1 | COIL,TUBE DEFLE:(SEE L14165 EPL) | | |



@

| Fig. & Index No. | Tektronix Part No. | Serial/Model No. Eff | Dscont | Qty | 1 2 3 4 5 Name & Description | Mfr Code | Mfr Part Number |
|---|---|---|---|---|---|---|---|
| 1-85 | 344-0250-00 | | | 1 | CLIP,ELECTRICAL:COMPONENT MOUNTING | 80033 | E50005-007 |
| | | | | | (ATTACHING PARTS) | | |
| -86 | 211-0008-00 | | | 1 | SCREW,MACHINE:4-40 X 0.25 INCH,PNH STL | 83385 | OBD |
| -87 | 210-0586-00 | | | 1 | NUT,PLAIN,EXT W:4-40 X 0.25 INCH,STL | 78189 | 211-041800-00 |
| | | | | | - - - * - - - | | |
| -88 | 337-1763-01 | | | 1 | SHIELD,ELEC:TRANSFORMER | 80009 | 337-1763-01 |
| -89 | 348-0349-00 | | | FT | SHLD GSKT,ELEC:0.187 INCH DIA,2.75 FT L | 07700 | 2143951 |
| -90 | 348-0339-00 | | | 4 | FOOT,CABINET:W/CORD WRAP | 80009 | 348-0339-00 |
| | | | | | (ATTACHING PARTS FOR EACH) | | |
| -91 | 212-0020-00 | | | 1 | SCREW,MACHINE:8-32 X 1.0 INCH,PNH STL | 93907 | OBD |
| | | | | | - - - * - - - | | |
| -92 | 426-0970-00 | | | 1 | FR SECT.,CAB.:REAR | 80009 | 426-0970-00 |
| | | | | | (ATTACHING PARTS) | | |
| -93 | 211-0516-00 | | | 2 | SCREW,MACHINE:6-32 X 0.875 INCH,PNH STL | 83385 | OBD |
| -94 | 210-1002-00 | | | 2 | WASHER,FLAT:0.125 ID X 0.022 THK,BRS | 12327 | OBD |
| | | | | | - - - * - - - | | |
| -95 | 378-0044-01 | | | 1 | FILTER ELEM,AIR:2.5 X 2.5 X 0.25 | 80009 | 378-0044-01 |
| -96 | 131-0955-00 | | | 4 | CONNECTOR,RCPT,:BNC,FEMALE,W/HARDWARE | 13511 | 31-279 |
| -97 | 210-0255-00 | | | 4 | TERMINAL,LUG:0.391" ID INT TOOTH | 80009 | 210-0255-00 |
| -98 | 386-2408-00 | | | 1 | PLATE,CONN MTG:ALUMINUM | 80009 | 386-2408-00 |
| | 200-1445-05 | | | 1 | COV,LINE V SEL:W/HARDWARE | 80009 | 20-1445-05 |
| | | | | | (ATTACHING PARTS) | | |
| -99 | 211-0101-00 | | | 2 | SCREW,MACHINE:4-40 X 0.25" 100 DEG,FLH STL | 83385 | OBD |
| | | | | | - - - * - - - | | |
| | ----- ----- | | | - | . COVER INCLUDES: | | |
| -100 | ----- ----- | | | 1 | . COVER,SCORE:REAR(AVAILABLE AS ASSY ONLY) | | |
| -101 | 378-0807-01 | | | 1 | . SCREEN,FAN:2.5 X 2.5 X 0.032,AL | 80009 | 378-0807-01 |
| -102 | 200-1399-02 | | | 1 | . COVER,FAN IMPLR: | 80009 | 200-1399-02 |
| -103 | 369-0031-00 | | | 1 | IMPLR,FAN,AXIAL:2.60 INCH OD,PLASTIC | 80009 | 369-0031-00 |
| | 213-0022-00 | | | 1 | . SETSCREW:4-40 X 0.188 INCH,HEX SOC STL | 74445 | OBD |
| -104 | 200-1445-00 | | | 1 | COV,LINE V SEL: | 80009 | 200-1445-00 |
| -105 | 352-0102-00 | | | 1 | . FUSEHOLDER:0.262"ID TUBE FOR CRTG FUSE | 80009 | 352-0102-00 |
| | | | | | (ATTACHING PARTS) | | |
| -106 | 213-0717-00 | | | 2 | . SCREW,TPG,TF:4-20 X 0.312 PNH,STL,CD PL | 93907 | OBD |
| | | | | | - - - * - - - | | |
| -107 | 204-0549-01 | | | 1 | BODY ASSY,LINE: | 80009 | 204-0549-01 |
| | | | | | (ATTACHING PARTS) | | |
| -108 | 210-0407-00 | | | 2 | NUT,PLAIN,HEX.:6-32 X 0.25 INCH,BRS | 73743 | 3038-0228-402 |
| -109 | 210-0006-00 | | | 2 | WASHER,LOCK:#6 INTL,0.018THK,STL CD PL | 78189 | 1206-00-00-0541C |
| | | | | | - - - * - - - | | |
| | ----- ----- | | | - | . BODY ASSY,LINE INCLUDES: | | |
| | 131-1318-01 | | | 2 | . CONTACT ASSY,EL:SHORTING BAR | 80009 | 131-1318-01 |
| | 210-0666-00 | | | 2 | . RIVET,TUBULAR:0.188 L X 0.125 OD | 12014 | OBD |
| | 214-0778-00 | | | 1 | . CONTACT ASSY,EL:SELECTOR BLOCK | 80009 | 214-0778-00 |
| | 344-0135-00 | | | 2 | . CLIP,ELECTRICAL:FUSE,CU BE | 80009 | 344-0135-00 |
| -110 | 161-0033-07 | | | 1 | CABLE ASSY,PWR,:3 WIRE,92 INCH LONG | 80009 | 161-0033-07 |
| | | | | | (ATTACHING PARTS) | | |
| -111 | 358-0371-00 | | | 1 | BSHG,STRAIN RLF:90 DEG,0.25 INCH DIA HOLE | 80009 | 358-0371-00 |
| -112 | 200-1004-00 | | | 1 | CABLE,NIP.,ELEC:0.265 ID X 0.38"OD W/FLG | 80009 | 200-1004-00 |
| -113 | 358-0372-00 | | | 1 | BSHG,STRAIN RLF:180 DEG,0.156" DIA HOLE | 80009 | 358-0372-00 |
| -114 | 386-2332-10 | | | 1 | PANEL,REAR: | 80009 | 386-2332-10 |
| | | | | | (ATTACHING PARTS) | | |
| -115 | 211-0105-00 | | | 1 | SCREW,MACHINE:4-40 X 0.188"100 DEG,FLH STL | 83385 | OBD |
| -116 | 211-0138-00 | | | 1 | SCREW,MACHINE:5-40 X 2.562 INCH,PNH STL | 83385 | OBD |
| -117 | 210-0586-00 | | | 1 | NUT,PLAIN,EXT W:4-40 X 0.25 INCH,STL | 78189 | 211-041800-00 |
| -118 | 210-0202-00 | | | 1 | TERMINAL,LUG:0.146 ID,LOCKING,BRZ TINNED | 78189 | 2104-06-00-2520N |
| -119 | ----- ----- | | | 1 | SW,THERMOSTATIC:(SEE S14520 EPL | | |
| | | | | | (ATTACHING PARTS) | | |
| -120 | 213-0138-00 | | | 2 | SCR,TPG,THD FOR:4-40 X 0.188 INCH,PNH STL | 83385 | OBD |
| | | | | | - - - * - - - | | |

| Fig. & Index No. | Tektronix Part No. | Serial/Model No. Eff | Dscont | Qty | 1 2 3 4 5 Name & Description | Mfr Code | Mfr Part Number |
|---|---|---|---|---|---|---|---|
| 1-121 | ----- ----- | | | 1 | TRANSFORMER:(SEE T14500 EPL) | | |
| | | | | | (ATTACHING PARTS) | | |
| -122 | 211-0538-00 | | | 2 | SCREW,MACHINE:6-32 X 0.312"100 DEG,FLH STL | 83385 | OBD |
| -123 | 210-0457-00 | | | 2 | NUT,PLAIN,EXT W:6-32 X 0.312 INCH,STL | 83385 | OBD |
| | 211-0114-00 | | | 1 | SCREW,MACHINE:4-40 X 0.438 INCH,FLH STL | 83385 | OBD |
| | 210-0551-00 | | | 1 | NUT,PLAIN,HEX.:4-40 X 0.25 INCH,STL | 83385 | OBD |
| | | | | | - - - * - - - | | |
| | ----- ----- | | | - | . TRANSFORMER INCLUDES: | | |
| -124 | 407-1066-00 | | | 1 | . BRACKET,XFMR:ALUMINUM | 80009 | 407-1066-00 |
| -125 | 212-0523-00 | | | 4 | . SCREW,MACHINE:10-32 X 2.750,HEX HD STL | 83385 | OBD |
| -126 | 210-0812-00 | | | 4 | . WASHER,NONMETAL:#10,FIBER | 86445 | OBD |
| -127 | 166-0457-00 | | | 4 | . INSUL SLVG,ELEC:0.19 ID X 1.875"LONG MYLAR | 80009 | 166-0457-00 |
| -128 | 200-1544-00 | | | 1 | . COVER,ELEC XFMR:2.0 X 2.5 X 0.65,STEEL | 80009 | 200-1544-00 |
| -129 | 220-0561-00 | | | 4 | . NUT,PLAIN,HEX.:10-32 X 0.25 INCH,BRS | 80009 | 220-0561-00 |
| -130 | 210-0056-00 | | | 4 | . WASHER,LOCK:SPLIT,0.195 ID X 0.32" OD,P BRZ | 83385 | OBD |
| -131 | 210-0202-00 | | | 1 | TERMINAL,LUG:0.146 ID,LOCKING,BRZ TINNED | 78189 | 2104-06-00-2520N |
| | | | | | (ATTACHING PARTS) | | |
| -132 | 210-0586-00 | | | 1 | NUT,PLAIN,EXT W:4-40 X 0.25 INCH,STL | 78189 | 211-041800-00 |
| | | | | | - - - * - - - | | |
| -133 | ----- ----- | | | 2 | TRANSISTOR:(SEE Q4102,Q4401 EPL) | | |
| | ----- ----- | | | 1 | TRANSISTOR:(SEE Q4301 EPL) | | |
| | | | | | (ATTACHING PARTS FOR EACH) | | |
| -134 | 211-0012-00 | | | 1 | SCREW,MACHINE:4-40 X 0.375 INCH,PNH STL | 83385 | OBD |
| -135 | 210-0071-00 | | | 1 | WASHER,SPR TNSN:0.146 ID X 0.323" OD,STL | 78189 | 4706-05-01-0531 |
| | | | | | - - - * - - - | | |
| -136 | 342-0163-00 | | | 3 | INSULATOR,PLATE:XSTR,0.675 X 0.625 X 0.001" | 80009 | 342-0163-00 |
| -137 | 441-1084-05 | | | 1 | CHASSIS,SCOPE:W/HARDWARE | 80009 | 441-1084-05 |
| -138 | 129-0394-00 | | | 4 | . SPACER,POST:0.50 L,W/8-32 THD THRU | | |
| -139 | 214-0291-00 | | | 1 | . CONTACT,SPRING:1.188 X 0.375 X 0.25 INCH | 80009 | 214-0291-00 |
| | 136-0515-01 | | | 1 | SKT,PL-IN ELEK:ELCTRN TUBE,14 CONT W/LEAD | 80009 | 136-0515-01 |
| -140 | 136-0202-01 | | | 1 | . SOCKET,PLUG-IN:14 PIN | 80009 | 136-0202-01 |
| -141 | 131-0707-00 | | | 4 | . CONNECTOR,TERM.:22-26 AWG,BRS& CU BE GOLD | 22526 | 47439 |
| -142 | 352-0162-00 | | | 1 | . HLDR,TERM CONN:4 WIRE BLACK | 80009 | 352-0162-00 |
| -143 | 179-2670-00 | | | 1 | WIRING HARNESS:MAIN | 80009 | 179-2670-00 |
| -144 | 352-0169-00 | | | 1 | . HLDR,TERM CONN:2 WIRE BLACK | 80009 | 352-0169-00 |
| -145 | 352-0161-00 | | | 1 | . HLDR,TERM CONN:3 WIRE BLACK | 80009 | 352-0161-00 |

For Service Manuals Contact
MAURITRON TECHNICAL SERVICES
8 Cherry Tree Rd, Chinnor
Oxon OX9 4QY
Tel:- 01844-351694 Fax:- 01844-352554
Email:- enquiries@mauritron.co.uk



@

| Fig. & Index No. | Tektronix Part No. | Serial/Model No. Eff | Dscont | Qty | 1 2 3 4 5 Name & Description | Mfr Code | Mfr Part Number |
|---|---|---|---|---|---|---|---|
| 2-1 | 337-1711-03 | | | 1 | SHIELD,ELEC:HIGH VOLTAGE | 80009 | 337-1711-03 |
| | | | | | (ATTACHING PARTS) | | |
| -2 | 211-0244-00 | | | 3 | SCR,ASSEM WSHR:4-40 X 0.312 INCH,PNH STL | 78189 | OBD |
| -3 | 210-0004-00 | | | 4 | WASHER,LOCK:#4 INTL,0.015THK,STL CD PL | 78189 | 1204-00-00-0541C |
| | | | | | - - - * - - - | | |
| | 131-1428-00 | | | 1 | CONTACT,ELEC:GROUNDING CLIP | 80009 | 131-1428-00 |
| | | | | | (ATTACHING PARTS) | | |
| | 211-0012-00 | | | 1 | SCREW,MACHINE:4-40 X 0.375 INCH,PNH STL | 83385 | OBD |
| | 210-0851-00 | | | 1 | WASHER,FLAT:0.119 ID X 0.375 INCH OD,STL | 12327 | OBD |
| | | | | | - - - * - - - | | |
| -4 | 131-1428-00 | | | 1 | CONTACT,ELEC:GROUNDING CLIP | 80009 | 131-1428-00 |
| -5 | 342-0175-00 | | | 1 | INSULATOR,FILM:3.65 X 4.70 INCH | 80009 | 342-0175-00 |
| -6 | 129-0413-01 | | | 4 | SPACER,POST:0.538 L,W/4-40 TAP 1 END,STL | 80009 | 129-0413-01 |
| -7 | 210-0994-00 | | | 4 | WASHER,FLAT:0.125 ID X 0.25" OD,STL | 36928 | 5714-147-20N |
| -8 | ----- ----- | | | 2 | TRANSISTOR:(SEE Q4190,Q4312 EPL) | | |
| | | | | | (ATTACHING PARTS) | | |
| -9 | 211-0182-00 | | | 2 | SCR,ASSEM WSHR:2-56 X 0.312 INCH,PNH,STL | 12360 | OBD |
| -10 | 210-1156-00 | | | 2 | WASHER,NONMETAL:0.09 ID X 0.121" OD,NYLON | 80009 | 210-1156-00 |
| | | | | | - - - * - - - | | |
| -11 | 342-0166-00 | | | 2 | INSULATOR,PLATE:TRANSISTOR | 80009 | 342-0166-00 |
| -12 | 384-1408-00 | | | 2 | EXTENSION SHAFT:3.8 L,MOLDED PLASTIC | 80009 | 384-1408-00 |
| -13 | 384-0457-00 | | | 1 | EXTENSION SHAFT:6.7 L X 0.1230D EPOXY-GL | 80009 | 384-0457-00 |
| -14 | 384-1187-00 | | | 2 | EXTENSION SHAFT:3.40 INCH LONG | 80009 | 384-1187-00 |
| -15 | 384-1179-00 | | | 1 | EXTENSION SHAFT:9.312 INCH LONG | 80009 | 384-1179-00 |
| -16 | 384-1174-00 | | | 1 | EXTENSION SHAFT:1.80 INCH LONG | 80009 | 384-1174-00 |
| -17 | 376-0029-00 | | | 5 | CPLG,SHAFT,RGD:0.128 ID X 0.312 OD X 0.5"L | 80009 | 376-0029-00 |
| | ----- ----- | | | - | . EACH COUPLING SHAFT INCLUDES: | | |
| | 213-0075-00 | | | 2 | . SETSCREW:4-40 X 0.094 INCH,HEX SOC STL | 0003K | OBD |
| -18 | 195-0276-01 | | | 1 | LEAD,ELECTRICAL:0.062 DIA,BRS,W/MLD COLLAR | 80009 | 195-0276-01 |
| -19 | ----- ----- | | | 1 | CKT BOARD ASSY:INTERFACE(SEE A4 EPL) | | |
| | | | | | (ATTACHING PARTS) | | |
| -20 | 211-0244-00 | | | 7 | SCR,ASSEM WSHR:4-40 X 0.312 INCH,PNH STL | 78189 | OBD |
| | | | | | - - - * - - - | | |
| | ----- ----- | | | - | . CKT BOARD ASSY INCLUDES: | | |
| -21 | 136-0499-12 | | | 1 | . CONNECTOR,RCPT,:12 CONTACT | 00779 | 4-380949-2 |
| -22 | 136-0499-14 | | | 1 | . CONNECTOR,RCPT,:14 CONTACT | 00779 | 4-380949-4 |
| -23 | 136-0514-00 | | | 1 | . SOCKET,PLUG IN:MICROCIRCUIT,8 CONTACT | 73803 | CS9002-8 |
| -24 | ----- ----- | | | 1 | . SEMICOND DVC,DI:V MULTI(SEE U4032 EPL) | | |
| | | | | | (ATTACHING PARTS) | | |
| -25 | 220-0736-00 | | | 1 | . NUT,PL,EXT WSHR:8-32 X 0.344 HEX,NYLON | 23050 | OBD |
| | | | | | - - - * - - - | | |
| -26 | ----- ----- | | | 1 | . PUSHBUTTON SW:BEAMFIND(SEE S4075 EPL) | | |
| -27 | 361-0382-00 | B010100 | B010849 | 4 | . SPACER,PB SW:BROWN,0.275 INCH LONG | 80009 | 361-0382-00 |
| | 361-0608-00 | B010850 | | 4 | . SPACER,PUSH SW:PLASTIC | 80009 | 361-0608-00 |
| -28 | ----- ----- | | | 1 | . RES.,VAR,NONWIR:INTENSITY(SEE R4059 EPL) | | |
| -29 | 361-0607-00 | | | 4 | . SPACER,SWITCH:PLASTIC | 80009 | 361-0607-00 |
| -30 | ----- ----- | | | 1 | . PUSHBUTTON SW:X10 MAG(SEE S4371 EPL) | | |
| -31 | ----- ----- | | | 1 | . RES.,VAR,NONWIR:ASTIG(SEE R4178 EPL) | | |
| -32 | ----- ----- | | | 1 | . RES.,VAR,NONWIR:TRACE ROTATION(SEE R4179 EPL) | | |
| -33 | ----- ----- | | | 1 | . RES.,VAR,NONWIR:SCALE ILLUM(SEE R4195 EPL) | | |
| -34 | ----- ----- | | | 1 | . RES.,VAR,NONWIR:FOCUS(SEE R4132 EPL) | | |
| | | | | | (ATTACHING PARTS) | | |
| -35 | 210-0583-00 | | | 1 | . NUT,PLAIN,HEX.:0.25-32 X 0.312 INCH,BRS | 73743 | 2X20224-402 |
| -36 | 210-0046-00 | | | 1 | . WASHER,LOCK:INTL,0.26 ID X 0.40" OD,STL | 78189 | 1214-05-00-0541C |
| -37 | 210-0940-00 | | | 1 | . WASHER,FLAT:0.25 ID X 0.375 INCH OD,STL | 79807 | OBD |
| | | | | | - - - * - - - | | |
| -38 | 386-2433-00 | | | 1 | . SUPPORT,VAR RES:CIRCUIT CARD MOUNTING | 80009 | 386-2433-00 |
| -39 | 131-1003-00 | | | 5 | . CONN,RCPT,ELEC:CKT BD MT,3 PRONG | 80009 | 131-1003-00 |
| -40 | 337-1759-00 | | | 1 | . SHLD,ELECTRICAL:SWEEP | 80009 | 337-1759-00 |
| -41 | 136-0269-02 | | | 3 | . SOCKET,PLUG-IN:14 CONTACT,LOW CLEARANCE | 01295 | C95140 |
| -42 | 136-0252-04 | B010100 | B033189 | 168 | . SOCKET,PIN TERM:0.188 INCH LONG | 22526 | 75060-007 |
| | 136-0252-04 | B033190 | | 165 | . SOCKET,PIN TERM:0.188 INCH LONG | 22526 | 75060-007 |
| -43 | 131-0608-00 | B010100 | B033189 | 43 | . TERMINAL,PIN:0.365 L X 0.25 PH,BRZ,GOLD PL | 22526 | 47357 |
| | 131-0608-00 | B033190 | | 41 | . TERMINAL,PIN:0.365 L X 0.25 PH,BRZ,GOLD PL | 22526 | 47357 |
| -44 | 358-0214-00 | | | 3 | . INSULATOR,BSHG:0.25 DIA X 0.188 INCH L | 24011 | OBD |
| -45 | 124-0092-00 | | | 2 | . TERMINAL BOARD:3 NOTCH,CERAMIC,CLIP MTD | 80009 | 124-0092-00 |

| Fig. & Index No. | Tektronix Part No. | Serial/Model No. Eff | Dscont | Qty | 1 2 3 4 5 Name & Description | Mfr Code | Mfr Part Number |
|---|---|---|---|---|---|---|---|
| 2-46 | 124-0118-00 | | | 1 | . TERMINAL BOARD:1 NOTCH,CERAMIC,CLIP MTD | 80009 | 124-0118-00 |
| -47 | 344-0154-00 | | | 4 | . CLIP,ELECTRICAL:FOR 0.25 INCH DIA FUSE | 80009 | 344-0154-00 |
| -48 | 131-1261-00 | | | 24 | . CONTACT,ELEC:F-SHAPED | 00779 | 1-380953-0 |
| -49 | 131-0566-00 | | | 10 | . LINK,TERM.CONNE:0.086 DIA X 2.375 INCH L | 55210 | L-2007-1 |
| -50 | 214-0579-00 | B010100 | B010849 | 17 | . TERM,TEST POINT:BRS CD PL | 80009 | 214-0579-00 |
| | 214-0579-00 | B010850 | | 18 | . TERM,TEST POINT:BRS CD PL | 80009 | 214-0579-00 |
| -51 | 131-0382-00 | | | 1 | . TERMINAL,STUD:0.812 L,INSULATED | 71279 | 572-4822-01-05-1 |
| | | | | | (ATTACHING PARTS) | | |
| -52 | 210-0586-00 | | | 1 | . NUT,PLAIN,EXT W:4-40 X 0.25 INCH,STL | 78189 | 211-041800-00 |
| | | | | | - - - * - - - | | |
| | 198-2850-00 | | | 1 | . WIRE SET,ELEC: | 80009 | 198-2850-00 |
| -53 | 384-1159-00 | | | 1 | EXTENSION SHAFT:10.384 INCH LONG,W/KNOB | 80009 | 384-1159-00 |
| -54 | 214-1756-00 | | | 1 | ACTUATOR,SWITCH:POWER | 80009 | 214-1756-00 |
| | 644-0151-00 | | | 1 | SWITCH ASSY: | 80009 | 644-0151-00 |
| | | | | | (ATTACHING PARTS) | | |
| -55 | 211-0244-00 | | | 1 | SCR,ASSEM WSHR:4-40 X 0.312 INCH,PNH STL | 78189 | OBD |
| -56 | 210-0551-00 | | | 1 | NUT,PLAIN,HEX.:4-40 X 0.25 INCH,STL | 83385 | OBD |
| | 210-0406-00 | | | 1 | NUT,PLAIN,HEX.:4-40 X 0.188 INCH,BRS | 73743 | 2X12161-402 |
| | 210-0994-00 | | | 1 | WASHER,FLAT:0.125 ID X 0.25" OD,STL | 86928 | 5714-147-20N |
| | | | | | - - - * - - - | | |
| | ----- ----- | | | - | . SWITCH ASSY INCLUDES: | | |
| -57 | ----- ----- | | | 1 | . SWITCH,TOGGLE:POWER ON(SEE S14510 EPL) | | |
| | | | | | (ATTACHING PARTS) | | |
| -58 | 210-0562-00 | | | 1 | . NUT,PLAIN,HEX.:0.25-40 X 0.312 INCH,BBS | 73743 | 2X20224-402 |
| -59 | 210-0046-00 | | | 1 | . WASHER,LOCK:INTL,0.26 ID X 0.40" OD,STL | 78189 | 1214-05-00-0541C |
| | | | | | - - - * - - - | | |
| -60 | ----- ----- | | | 1 | . SWITCH,SLIDE:LINE SELECT(SEE S14500 EPL) | | |
| | | | | | (ATTACHING PARTS) | | |
| -61 | 211-0101-00 | | | 2 | . SCREW,MACHINE:4-40 X 0.25" 100 DEG,FLH STL | 83385 | OBD |
| | | | | | - - - * - - - | | |
| -62 | 200-1526-00 | | | 1 | . CON,INV SW HOLE: | 80009 | 200-1526-00 |
| -63 | 407-1133-00 | | | 1 | . BRACKET,ELEC SW:ALUMINUM | 80009 | 407-1133-00 |
| | 386-2660-00 | | | 1 | SUPPORT,CKT BD:ACETAL | 80009 | 386-2660-00 |
| -64 | ----- ----- | | | 1 | CKT BOARD ASSY:TRIG GEN & SW LOG(SEE A7 EPL) | | |
| | | | | | (ATTACHING PARTS) | | |
| -65 | 211-0244-00 | | | 4 | SCR,ASSEM WSHR:4-40 X 0.312 INCH,PNH STL | 78189 | OBD |
| | | | | | - - - * - - - | | |
| | ----- ----- | | | - | . CKT BOARD ASSY INCLUDES: | | |
| -66 | 131-1003-00 | | | 8 | . CONN,RCPT,ELEC:CKT BD MT,3 PRONG | 80009 | 131-1003-00 |
| -67 | 200-0945-00 | | | 3 | . COVER,HALF XSTR:FOR DUAL TO-18 CASE | 80009 | 200-0945-00 |
| -68 | 200-0945-01 | | | 3 | . COVER,HALF XSTR:FOR DUAL TO-18 CS,2-56 THD | 80009 | 200-0945-01 |
| | | | | | (ATTACHING PARTS) | | |
| -69 | 211-0062-00 | | | 1 | . SCREW,MACHINE:2-56 X 0.312 INCH,RDH STL | 83385 | OBD |
| | | | | | - - - * - - - | | |
| -70 | 136-0260-02 | | | 2 | . SOCKET,PLUG-IN:16 CONTACT,LOW CLEARANCE | 82647 | C9316-18 |
| -71 | 136-0499-10 | | | 1 | . CONNECTOR,RCPT,:10 CONTACT | 00779 | 4-380949-0 |
| -72 | 136-0499-14 | | | 1 | . CONNECTOR,RCPT,:14 CONTACT | 00779 | 4-380949-4 |
| -73 | 131-0566-00 | | | 3 | . LINK,TERM.CONNE:0.086 DIA X 2.375 INCH L | 55210 | L-2007-1 |
| -74 | 136-0634-00 | | | 1 | . SOCKET,PLUG-IN:20 LEAD DIP,CKT BD MTG | 82647 | CS9002-20 |
| -75 | 211-0244-00 | | | 1 | . SCR,ASSEM WSHR:4-40 X 0.312 INCH,PNH STL | 78189 | OBD |
| -76 | 129-0413-01 | | | 1 | . SPACER,POST:0.538 L,W/4-40 TAP 1 END,STL | 80009 | 129-0413-01 |
| -77 | 210-0994-00 | | | 1 | . WASHER,FLAT:0.125 ID X 0.25" OD,STL | 86928 | 5714-147-20N |
| -78 | 136-0252-04 | | | 108 | . SOCKET,PIN TERM:0.188 INCH LONG | 22526 | 75060-007 |
| -79 | 131-0608-00 | | | 19 | . TERMINAL,PIN:0.365 L X 0.25 PH,BRZ,GOLD PL | 22526 | 47357 |
| -80 | 214-0579-00 | | | 3 | . TERM,TEST POINT:BRS CD PL | 80009 | 214-0579-00 |
| -81 | 407-1157-00 | | | 1 | . BRACKET,ELEC SW:ALUMINUM | 80009 | 407-1157-00 |
| -82 | 386-2376-00 | | | 1 | . PLATE,LEVER MTG:SLIDE SWITCH | 80009 | 386-2376-00 |
| | | | | | (ATTACHING PARTS) | | |
| -83 | 210-0657-00 | | | 2 | . EYELET,METALLIC:0.089 OD X 0.218 L,BRL | | |
| | | | | | - - - * - - - | | |
| -84 | 214-1770-00 | | | 4 | . LEVER,SLIDE SW: | 80009 | 214-1770-00 |
| | | | | | (ATTACHING PARTS) | | |
| -85 | 354-0165-00 | | | 4 | . RING,RETAINING:0.114 FREE IDX 0.025 INCH | 97464 | 1000-15 |
| | | | | | - - - * - - - | | |

| Fig. & Index No. | Tektronix Part No. | Serial/Model No. Eff | Dscont | Qty | 1 2 3 4 5 Name & Description | Mfr Code | Mfr Part Number |
|---|---|---|---|---|---|---|---|
| 2-86 | 384-1160-00 | | | 4 | . EXTENSION SHAFT:3.05 INCH LONG | 91260 | OBD |
| -87 | 376-0142-00 | | | 4 | . ADPT,SHAFT,CPLG:SLIDE TO SHAFT | 80009 | 376-0142-00 |
| -88 | 213-0048-00 | | | 1 | . . SETSCREW:4-40 X 0.125 INCH,HEX SOC STL | 74445 | OBD |
| | ----- ----- | | | 1 | . SWITCH ASSY:B COUPLING(SEE S7015 EPL) | | |
| | 351-0355-01 | | | 1 | . . GUIDE,SLIDE SW:W/SPRINGS AND ROLLERS | 80009 | 351-0355-01 |
| -89 | 351-0355-00 | | | 1 | . . . GUIDE,SLIDE SW: | 80009 | 351-0355-00 |
| -90 | 214-1126-01 | | | 2 | . . . SPRING,FLAT:GREEN COLORED | 80009 | 214-1126-01 |
| -91 | 214-1127-00 | | | 2 | . . . ROLLER,DETENT:0.125 DIA X 0.125 INCH L | 80009 | 214-1127-00 |
| -92 | 105-0804-00 | | | 1 | . . ACTUATOR,SL SW:4 OF 5 POSITIONS | 80009 | 105-0804-00 |
| -93 | 131-2235-07 | | | 1 | . . CONTACT,ELEC:COPPER | | |
| | 210-0779-00 | | | 1 | . . RIVET,TUBULAR:0.051 OD X 0.115 INCH LONG | 42838 | RA-29952715 |
| | ----- ----- | | | 1 | . SWITCH ASSY:B SOURCE(SEE S7112 EPL) | | |
| | 351-0355-01 | | | 1 | . . GUIDE,SLIDE SW:W/SPRINGS AND ROLLERS | 80009 | 351-0355-01 |
| -94 | 351-0355-00 | | | 1 | . . . GUIDE,SLIDE SW: | 80009 | 351-0355-00 |
| -95 | 214-1126-01 | | | 2 | . . . SPRING,FLAT:GREEN COLORED | 80009 | 214-1126-01 |
| -96 | 214-1127-00 | | | 2 | . . . ROLLER,DETENT:0.125 DIA X 0.125 INCH L | 80009 | 214-1127-00 |
| -97 | 105-0807-00 | | | 1 | . . ACTUATOR,SL SW:5 OF 6 POSITIONS | 80009 | 105-0807-00 |
| -98 | 131-2235-07 | | | 1 | . . CONTACT,ELEC:COPPER | | |
| | 210-0779-00 | | | 1 | . . RIVET,TUBULAR:0.051 OD X 0.115 INCH LONG | 42838 | RA-29952715 |
| | ----- ----- | | | 1 | . SWITCH ASSY:A COUPLING(SEE S7415 EPL) | | |
| | 351-0355-01 | | | 1 | . . GUIDE,SLIDE SW:W/SPRINGS AND ROLLERS | 80009 | 351-0355-01 |
| -99 | 351-0355-00 | | | 1 | . . . GUIDE,SLIDE SW: | 80009 | 351-0355-00 |
| -100 | 214-1126-01 | | | 2 | . . . SPRING,FLAT:GREEN COLORED | 80009 | 214-1126-01 |
| -101 | 214-1127-00 | | | 2 | . . . ROLLER,DETENT:0.125 DIA X 0.125 INCH L | 80009 | 214-1127-00 |
| -102 | 105-0805-00 | | | 1 | . . ACTUATOR,SL SW:4 OF 6 POSITIONS | 80009 | 105-0805-00 |
| -103 | 131-2235-07 | | | 1 | . . CONTACT,ELEC:COPPER | | |
| | 210-0779-00 | | | 1 | . . RIVET,TUBULAR:0.051 OD X 0.115 INCH LONG | 42838 | RA-29952715 |
| | ----- ----- | | | 1 | . SWITCH ASSY:A SOURCE(SEE S7312 EPL) | | |
| | 351-0355-01 | | | 1 | . . GUIDE,SLIDE SW:W/SPRINGS AND ROLLERS | 80009 | 351-0355-01 |
| -104 | 351-0355-00 | | | 1 | . . . GUIDE,SLIDE SW: | 80009 | 351-0355-00 |
| -105 | 214-1126-01 | | | 2 | . . . SPRING,FLAT:GREEN COLORED | 80009 | 214-1126-01 |
| -106 | 214-1127-00 | | | 2 | . . . ROLLER,DETENT:0.125 DIA X 0.125 INCH L | 80009 | 214-1127-00 |
| -107 | 105-0805-00 | | | 1 | . . ACTUATOR,SL SW:4 OF 6 POSITIONS | 80009 | 105-0805-00 |
| -108 | 131-2235-07 | | | 1 | . . CONTACT,ELEC:COPPER | | |
| | 210-0779-00 | | | 1 | . . RIVET,TUBULAR:0.051 OD X 0.115 INCH LONG | 42838 | RA-29952715 |
| -109 | 384-1136-00 | | | 3 | EXTENSION SHAFT:0.95 INCH LONG | 80009 | 384-1136-00 |
| -110 | 384-1059-00 | | | 4 | EXTENSION SHAFT:6.58 INCH LONG | 80009 | 384-1059-00 |
| | 672-0781-00 | | | 1 | CKT BOARD ASSY:TIMING | 80009 | 672-0781-00 |
| | | | | | (ATTACHING PARTS) | | |
| -111 | 211-0244-00 | | | 1 | SCR,ASSEM WSHR:4-40 X 0.312 INCH,PNH STL | 78189 | OBD |
| -112 | 129-0386-00 | | | 1 | POST,ELEC-MECH:HEX,1.593 INCH LONG | 80009 | 129-0386-00 |
| | | | | | - - - * - - - | | |
| | ----- ----- | | | - | . TIMING ASSY INCLUDES: | | |
| -113 | 384-1105-00 | | | 1 | . EXTENSION SHAFT:8.241 L X 0.081 INCH OD | 80009 | 384-1105-00 |
| | 131-0963-00 | | | 1 | . CONTACT,ELEC:GROUNDING | 000EX | OBD |
| | 334-3448-00 | | | 1 | . MARKER IDNT:MARKED NOTICE | 80009 | 334-3448-00 |
| | ----- ----- | | | 1 | . SW CAM ACTR AS:TIME/CM(SEE S6111 EPL) | | |
| | | | | | (ATTACHING PARTS) | | |
| -114 | 211-0244-00 | | | 8 | . SCR,ASSEM WSHR:4-40 X 0.312 INCH,PNH STL | 78189 | OBD |
| | | | | | - - - * - - - | | |
| | ----- ----- | | | - | . . ACTUATOR ASSY INCLUDES: | | |
| -115 | 200-2314-00 | | | 1 | . . COVER,CAM SW:43 ELEMENTS,ALUMINUM | 80009 | 200-2314-00 |
| | | | | | (ATTACHING PARTS) | | |
| -116 | 211-0673-00 | | | 6 | . . SCREW,MACHINE:6-32 X 3.0 L,HEX,STL | | |
| -117 | 210-0004-00 | | | 7 | . . WASHER,LOCK:#4 INTL,0.015THK,STL CD PL | 78189 | 1204-00-00-0541C |
| -118 | 211-0101-00 | | | 1 | . . SCREW,MACHINE:4-40 X 0.25" 100 DEG,FLH STL | 83385 | OBD |
| | | | | | - - - * - - - | | |
| -119 | 337-2621-00 | | | 1 | . . SHIELD,ELEC:SWITCH | 80009 | 337-2621-00 |
| | | | | | (ATTACHING PARTS) | | |
| -120 | 211-0673-00 | | | 1 | . . SCREW,MACHINE:6-32 X 3.0 L,HEX,STL,CD PL | 80009 | 211-0673-00 |
| -121 | 210-0004-00 | | | 1 | . . WASHER,LOCK:#4 INTL,0.015THK,STL CD PL | 78189 | 1204-00-00-0541C |
| | | | | | - - - * - - - | | |
| -122 | 131-0963-00 | | | 1 | . . CONTACT,ELEC:GROUNDING | 000EX | OBD |
| -123 | 210-0406-00 | | | 4 | . . NUT,PLAIN,HEX.:4-40 X 0.188 INCH,BRS | 73743 | 2X12161-402 |
| -124 | 214-1139-02 | | | 1 | . . SPRING,FLAT:GREEN COLORED | 80009 | 214-1139-02 |
| | 214-1139-03 | | | 1 | . . SPRING,FLAT:RED COLORED | 80009 | 214-1139-03 |

| Fig. & Index No. | Tektronix Part No. | Serial/Model No. Eff | Dscont | Qty | 1 2 3 4 5 Name & Description | Mfr Code | Mfr Part Number |
|---|---|---|---|---|---|---|---|
| 2-125 | 214-1752-00 | | | 2 | . . ROLLER,DETENT: | 80009 | 214-1752-00 |
| -126 | 401-0180-00 | | | 1 | . . BEARING,CAM SW:FRONT | 80009 | 401-0180-00 |
| | | | | | (ATTACHING PARTS) | | |
| -127 | 354-0390-00 | | | 1 | . . RING,RETAINING:0.338 ID X 0.025" THK,STL | 79136 | 5100-37MD |
| | | | | | - - - * - - - | | |
| -128 | 105-0801-00 | | | 1 | . . ACTUATOR,CAM SW:TIME/CM,DRUM | 80009 | 105-0801-00 |
| | 210-1160-00 | | | 1 | . . WASHER,NONMETAL:0.109 ID X 0.25 INCH OD | 86445 | OBD |
| | 214-1416-00 | | | 1 | . . SPRING,HLCPS:0.176 OD X 0.835 INCH LONG | 27143 | OBD |
| -129 | 384-0878-02 | | | 1 | . . SHAFT,CAM SW: | 80009 | 384-0878-02 |
| -130 | 210-0406-00 | | | 4 | . . NUT,PLAIN,HEX.:4-40 X 0.188 INCH,BRS | 73743 | 2X12161-402 |
| -131 | 407-1199-00 | | | 1 | . . BRACKET,COVER:ABS | 80009 | 407-1199-00 |
| -132 | 210-0406-00 | | | 4 | . . NUT,PLAIN,HEX.:4-40 X 0.188 INCH,BRS | 73743 | 2X12161-402 |
| -133 | 401-0178-02 | | | 1 | . . BEARING,CAM SW:0.428 ID,PLASTIC | 80009 | 401-0178-02 |
| | 384-1531-00 | | | 1 | . . SHAFT,CAM SW:7.285 L X 0.125 OD | 80009 | 384-1531-00 |
| -134 | 352-0464-00 | | | 1 | . . . HOLDER,STOP PIN:ACTUATOR | | |
| | 213-0075-00 | | | 1 | . . . SETSCREW:4-40 X 0.094 INCH,HEX SOC STL | 000BK | OBD |
| -135 | 105-0733-00 | | | 1 | . . . STOP,SLIDE:0.314 L,BRASS | 80009 | 105-0733-00 |
| -136 | 354-0392-00 | | | 1 | . . . RING,RETAINING: | 79136 | 5555-12MD |
| -137 | 214-2478-00 | | | 1 | . . . SPR,HLCL,TRSN:0.015 DIA MUSIC WIRE | | |
| -138 | 384-0882-06 | | | 1 | . . . SHAFT,CAM SW:7.795 L X 0.125 OD | 80009 | 384-0882-06 |
| -139 | 105-0802-00 | | | 1 | . . ACTUATOR,CAM SW:TIME/CM,DRUM | 80009 | 105-0802-00 |
| | | | | | (ATTACHING PARTS) | | |
| -140 | 354-0390-00 | | | 1 | . . RING,RETAINING:0.338 ID X 0.025" THK,STL | 79136 | 5100-37MD |
| | | | | | - - - * - - - | | |
| -141 | 210-0406-00 | | | 4 | . . NUT,PLAIN,HEX.:4-40 X 0.188 INCH,BRS | 73743 | 2X12161-402 |
| -142 | 214-1139-02 | | | 1 | . . SPRING,FLAT:GREEN COLORED | 80009 | 214-1139-02 |
| | 214-1139-03 | | | 1 | . . SPRING,FLAT:RED COLORED | 80009 | 214-1139-03 |
| -143 | 214-1752-00 | | | 2 | . . ROLLER,DETENT: | 80009 | 214-1752-00 |
| -144 | 401-0180-00 | | | 1 | . . BEARING,CAM SW:FRONT | 80009 | 401-0180-00 |
| -145 | 376-0039-00 | | | 1 | . ADPT,SHAFT,CPLG:0.128 AND 0.082"DIA SHAFT | 80009 | 376-0039-00 |
| | 213-0022-00 | | | 2 | . . SETSCREW:4-40 X 0.188 INCH,HEX SOC STL | 74445 | OBD |
| -146 | ----- ----- | | | 1 | . RES.,VAR,NONWIR:(SEE R6155 EPL) | | |
| -147 | 361-0515-00 | | | 1 | . SPACER,SWITCH:PLASTIC | 80009 | 361-0515-00 |
| -148 | ----- ----- | | | 1 | . CKT BOARD ASSY:TIMING(SEE A6 EPL) | | |
| -149 | 131-0604-00 | | | 42 | . . CONTACT,ELEC:CKT BD SW,SPR,CU BE | 80009 | 131-0604-00 |
| -150 | 131-1261-00 | | | 26 | . . CONTACT,ELEC:F-SHAPED | 00779 | 1-380953-0 |
| -151 | 131-0608-00 | | | 17 | . . TERMINAL,PIN:0.365 L X 0.25 PH,BRZ,GOLD PL | 22526 | 47357 |
| -152 | 136-0252-04 | | | 12 | . . SOCKET,PIN TERM:0.188 INCH LONG | 22526 | 75060-007 |
| -153 | ----- ----- | | | 1 | . . SW,PUSHBUTTON:3 WIDE(SEE S6205 EPL) | | |
| -154 | ----- ----- | | | 1 | . . SW,PUSHBUTTON:4 WIDE(SEE S6260 EPL) | | |
| -155 | 361-0542-00 | | | 8 | . . SPACER,SWITCH:PLASTIC | 71590 | J-64281 |
| -156 | 384-1007-01 | | | 2 | EXTENSION SHAFT:8.428 L X 0.124 OD,PLSTC | 80009 | 384-1007-01 |
| -157 | 384-1149-00 | | | 2 | EXTENSION SHAFT:7.0 INCH LONG | 80009 | 384-1149-00 |
| -158 | 376-0029-00 | B010100 | B010849 | 2 | CPLG,SHAFT,RGD:0.128 ID X 0.312 OD X 0.5"L | 80009 | 376-0029-00 |
| | 376-0051-01 | B010850 | | 2 | CPLG,SHAFT,FLEX:FOR 0.125 INCH DIA SHAFTS | 80009 | 376-0051-01 |
| | 213-0022-00 | | | 4 | . SETSCREW:4-40 X 0.188 INCH,HEX SOC STL | 74445 | OBD |
| | 384-1542-00 | | | 1 | EXTENSION SHAFT:11.682 L X 0.187 SQ,PLSTC | 80009 | 384-1542-00 |
| -159 | 384-1060-00 | | | 1 | . EXTENSION SHAFT:7.831 INCH LONG | 80009 | 384-1060-00 |
| -160 | 384-1101-00 | | | 1 | . EXTENSION SHAFT:4.14 INCH LONG | 80009 | 384-1101-00 |
| -161 | 384-1560-00 | | | 1 | EXTENSION SHAFT:4.834 L | 80009 | 384-1560-00 |
| -162 | 384-1129-00 | | | 5 | EXTENSION SHAFT:5.607 INCH LONG | 80009 | 384-1129-00 |
| -163 | ----- ----- | | | 1 | CKT BOARD ASSY:VERT PREAMP(SEE A1 EPL) | | |
| | | | | | (ATTACHING PARTS) | | |
| -164 | 211-0244-00 | | | 2 | SCR,ASSEM WSHR:4-40 X 0.312 INCH,PNH STL | 78189 | OBD |
| | | | | | - - - * - - - | | |
| | ----- ----- | | | - | . CKT BOARD ASSY INCLUDES: | | |
| -165 | 131-0566-00 | | | 2 | . LINK,TERM.CONNE:0.086 DIA X 2.375 INCH L | 55210 | L-2007-1 |
| -166 | 136-0252-04 | | | 171 | . SOCKET,PIN TERM:0.188 INCH LONG | 22526 | 75060-007 |
| -167 | 136-0260-02 | | | 2 | . SOCKET,PLUG-IN:16 CONTACT,LOW CLEARANCE | 82647 | C9316-18 |
| -168 | 136-0269-02 | | | 2 | . SOCKET,PLUG-IN:14 CONTACT,LOW CLEARANCE | 01295 | C95140 |
| -169 | 131-0608-00 | | | 14 | . TERMINAL,PIN:0.365 L X 0.25 PH,BRZ,GOLD PL | 22526 | 47357 |
| -170 | 214-0579-00 | | | 5 | . TERM,TEST POINT:BRS CD PL | 80009 | 214-0579-00 |
| -171 | 131-1003-00 | | | 10 | . CONN,RCPT,ELEC:CKT BD MT,3 PRONG | 80009 | 131-1003-00 |
| -172 | ----- ----- | | | 2 | . RES.,VAR,NONWIR:POSITION(SEE R1055,R1558 EPL) | | |
| -173 | 361-0607-00 | | | 2 | . SPACER,SWITCH:PLASTIC | 80009 | 361-0607-00 |
| -174 | ----- ----- | | | 2 | . RES.,VAR,NONWIR:(SEE R1285 EPL) | | |

| Fig. & Index No. | Tektronix Part No. | Serial/Model No. Eff | Dscont | Qty | 1 2 3 4 5 | Name & Description | Mfr Code | Mfr Part Number |
|---|---|---|---|---|---|---|---|---|
| 2-175 | 361-0515-00 | | | 2 | | . SPACER,SWITCH:PLASTIC | 80009 | 361-0515-00 |
| -176 | ----- ----- | | | 1 | | . SW,PUSHBUTTON:BW LIMIT(SEE S1414 EPL) | | |
| -177 | ----- ----- | | | 1 | | . SW,PUSHBUTTON:INVERT(SEE S1995 EPL) | | |
| -178 | 361-0411-00 | | | 4 | | . SPACER,PUSH SW:0.13 W X 0.375 INCH L,PLSTC | 71590 | J64285-00 |
| | 334-3448-00 | | | 2 | | MARKER,IDENT:MARKED NOTICE | 80009 | 334-3448-00 |
| | 672-0791-00 | | | 1 | | CKT BOARD ASSY:ATTENUATOR | 80009 | 672-0791-00 |
| -179 | 200-1439-00 | | | 2 | | . COVER,CHASSIS:ATTENUATOR | 80009 | 200-1439-00 |
| | | | | | | (ATTACHING PARTS) | | |
| -180 | 213-0055-00 | | | 2 | | SCR,TPG,THD FOR:2-32 X 0.188 INCH,PNH STL | 93907 | OBD |
| -181 | 210-0938-00 | | | 2 | | WASHER,FLAT:0.109 ID X 0.25 INCH OD,STL | 75497 | AN960-3 |
| -182 | 211-0097-00 | | | 8 | | SCREW,MACHINE:4-40 X 0.312 INCH,PNH STL | 83385 | OBD |
| -183 | 210-0994-00 | B010100 | B022379 | 8 | | WASHER,FLAT:0.125 ID X 0.25" OD,STL | 86928 | 5714-147-20N |
| | 210-1307-00 | B022380 | | 8 | | WASHER,LOCK:0.115 ID,SPLIT,0.025 THK | 80009 | 210-1307-00 |
| | | | | | | - - - * - - - | | |
| -184 | ----- ----- | | | 2 | | . CKT BOARD ASSY:ATTENUATOR(SEE A3 EPL) | | |
| | | | | | | (ATTACHING PARTS) | | |
| -185 | 211-0244-00 | | | 8 | | . SCR,ASSEM WSHR:4-40 X 0.312 INCH,PNH STL | 78189 | OBD |
| -186 | 210-0580-00 | | | 8 | | . NUT,PLAIN,HEX.:0.312-32 X 0.474 INCH,BRS | 73743 | OBD |
| -187 | 129-0299-00 | | | 8 | | . POST,ELEC-MECH:HEX,0.333 INCH LONG | 80009 | 129-0299-00 |
| -188 | 210-1307-00 | | | 8 | | . WASHER,LOCK:0.115 ID,SPLIT,0.025 THK | 80009 | 210-1307-00 |
| | | | | | | - - - * - - - | | |
| | ----- ----- | | | - | | . . EACH CKT BOARD ASSY INCLUDES: | | |
| -189 | 131-0679-02 | | | 2 | | . . CONNECTOR,RCPT,:BNC,MALE,3 CONTACT | 24931 | 28JR270-1 |
| | | | | | | (ATTACHING PARTS) | | |
| -190 | 220-0695-00 | | | 2 | | . . NUT,PLAIN,DODEC:0.500-28 X 0.90 INCH,BRS | 73743 | OBD |
| -191 | 210-1039-00 | | | 2 | | . . WASHER,LOCK:INT,0.521 ID X 0.625 INCH OD | 24931 | OBD |
| | | | | | | - - - * - - - | | |
| -192 | 136-0252-04 | | | 24 | | . . SOCKET,PIN TERM:0.188 INCH LONG | 22526 | 75060-007 |
| | 136-0333-00 | | | 2 | | . . SOCKET,PIN TERM:0.138 INCH LONG | 00779 | 1-331677-4 |
| -193 | 131-1030-00 | | | 10 | | . . CONT ASSY,ELEC:CAM SWITCH,BOTTOM | 80009 | 131-1030-00 |
| | 131-1031-00 | | | 10 | | . . CONTACT ASSY,EL:CAM SWITCH,TOP | 80009 | 131-1031-00 |
| -194 | 210-3082-00 | | | 10 | | . . EYELET,METALLIC:0.047 OD X 0.133L,BRS | 80009 | 210-3082-00 |
| -195 | 441-1058-02 | | | 1 | | . . CHASSIS,SCOPE:ATTENUATOR | 80009 | 441-1058-02 |
| | | | | | | (ATTACHING PARTS) | | |
| -196 | 211-0001-00 | | | 2 | | . . SCREW,MACHINE:2-56 X 0.25 INCH,PNH STL | 83385 | OBD |
| -197 | 210-0053-00 | | | 2 | | . . WASHER,LOCK:INTL,0.092 ID X 0.175"OD,STL | 83385 | OBD |
| -198 | 210-0405-00 | | | 2 | | . . NUT,PLAIN,HEX.:2-56 X 0.188 INCH,BRS | 73743 | 2X12157-402 |
| | 210-0845-00 | | | 1 | | . . WASHER,FLAT:0.500 ID X 0.625 INCH OD,STL | 89663 | 634-R |
| | 210-1008-00 | | | 2 | | . . WASHER,FLAT:0.09 ID X 0.188" OD,BRS | 12360 | OBD |
| | | | | | | - - - * - - - | | |
| -199 | 337-1406-00 | | | 1 | | . . SHLD,ELECTRICAL:CAM CONTACTS | 80009 | 337-1406-00 |
| -200 | ----- ----- | | | 2 | | CKT BOARD ASSY:PROBE CODING(SEE A9 EPL) | | |
| | | | | | | (ATTACHING PARTS) | | |
| -201 | 211-0065-00 | | | 2 | | SCREW,MACHINE:4-40 X 0.188 INCH,PNH STL | 77250 | OBD |
| | | | | | | - - - * - - - | | |
| | ----- ----- | | | - | | . CKT BOARD ASSY INCLUDES: | | |
| -202 | 131-0608-00 | | | 3 | | . TERMINAL,PIN:0.365 L X 0.25 PH,BRZ,GOLD PL | 22526 | 47357 |
| -203 | ----- ----- | | | 1 | | . CKT BOARD ASSY:VERT MODE(SEE A5 EPL) | | |
| | | | | | | (ATTACHING PARTS) | | |
| -204 | 211-0244-00 | | | 1 | | . SCR,ASSEM WSHR:4-40 X 0.312 INCH,PNH STL | 78189 | OBD |
| -205 | 129-0457-00 | | | 1 | | . SPACER,POST:1.07L,W/4-40 TAP 1 END | 80009 | 129-0457-00 |
| | | | | | | - - - * - - - | | |
| | ----- ----- | | | - | | . . CKT BOARD ASSY INCLUDES: | | |
| -206 | 131-0589-00 | | | 8 | | . . TERM,PIN:0.46 L X 0.025 SQ.PH BRZ GL | 22526 | 47350 |
| | 131-0608-00 | | | 21 | | . . TERMINAL,PIN:0.365 L X 0.25 PH,BRZ,GOLD PL | 22526 | 47357 |
| -207 | 136-0252-04 | | | 18 | | . . SOCKET,PIN TERM:0.188 INCH LONG | 22526 | 75060-007 |
| -208 | 136-0269-02 | | | 1 | | . . SOCKET,PLUG-IN:14 CONTACT,LOW CLEARANCE | 01295 | C95140 |
| -209 | 337-0896-00 | | | 2 | | . . PLATE,ELEC SHLD:CKT BOARD MOUNT,BRS | 80009 | 337-0896-00 |
| -210 | ----- ----- | | | 1 | | . . SWITCH,PB:(SEE S5210 EPL) | | |
| -211 | 361-0411-00 | | | 4 | | . . SPACER,PUSH SW:0.13 W X 0.375 INCH L,PLSTC | 71590 | J64285-00 |
| -212 | 105-0243-00 | | | 2 | | . . ACTUATOR,SWITCH: | 80009 | 105-0243-00 |
| | | | | | | (ATTACHING PARTS) | | |
| -213 | 213-0214-00 | | | 2 | | . . SCREW,CAP SCH:2-56 X 0.375"HEX HD STL | 70278 | OBD |
| | | | | | | - - - * - - - | | |

| Fig. & Index No. | Tektronix Part No. | Serial/Model No. Eff | Dscont | Qty | 1 2 3 4 5 | Name & Description | Mfr Code | Mfr Part Number |
|---|---|---|---|---|---|---|---|---|
| 2- | 263-1065-00 | | | 2 | . . . | SW CAM ACTR AS:VOLTS/DIV | 80009 | 263-1065-00 |
| | ----- ----- | | | - | . . . | EACH CAM SW ACTR INCLUDES: | | |
| -214 | 131-0963-00 | | | 1 | . . . | CONTACT,ELEC:GROUNDING | 000EX | OBD |
| -215 | 210-0406-00 | | | 2 | . . . | NUT,PLAIN,HEX.:4-40 X 0.188 INCH,BRS | 73743 | 2X12161-402 |
| -216 | 214-1139-02 | | | 2 | . . . | SPRING,FLAT:GREEN COLORED | 80009 | 214-1139-02 |
| -217 | 214-1752-00 | | | 2 | . . . | ROLLER,DETENT: | 80009 | 214-1752-00 |
| -218 | 401-0180-00 | | | 1 | . . . | BEARING,CAM SW:FRONT | 80009 | 401-0180-00 |
| | | | | | | (ATTACHING PARTS) | | |
| -219 | 354-0390-00 | | | 1 | . . . | RING,RETAINING:0.338 ID X 0.025" THK,STL | 79136 | 5100-37MD |
| | | | | | | - - - * - - - | | |
| -220 | 384-0878-02 | | | 1 | . . . | SHAFT,CAM SW: | 80009 | 384-0878-02 |
| -221 | 105-0282-01 | | | 1 | . . . | ACTUATOR,CAM SW:DC,GND,AC | 80009 | 105-0282-01 |
| -222 | 210-1189-00 | | | 1 | . . . | WASHER,FLAT:0.195 ID X 0.367 INCH OD,BRS | 51316 | OBD |
| | 214-2043-00 | | | 1 | . . . | SPRING,HLCPS:CONICAL,0.20 INCH LONG | 80009 | 214-2043-00 |
| -223 | 210-0406-00 | | | 4 | . . . | NUT,PLAIN,HEX.:4-40 X 0.188 INCH,BRS | 73743 | 2X12161-402 |
| -224 | 401-0178-00 | | | 1 | . . . | BEARING,CAM SW:CENTER/REAR | 80009 | 401-0178-00 |
| | | | | | | (ATTACHING PARTS) | | |
| -225 | 354-0443-00 | | | 1 | . . . | RING,RETAINING:0.328 FREE IDX 0.448 OD | 97464 | 200-37 |
| | | | | | | - - - * - - - | | |
| -226 | 384-0880-00 | | | 1 | . . . | SHAFT,CAM SW:REAR | 80009 | 384-0880-00 |
| -227 | 105-0521-00 | | | 1 | . . . | ACTUATOR,CAM SW:ATTEN | 80009 | 105-0521-00 |
| -228 | 210-0406-00 | | | 4 | . . . | NUT,PLAIN,HEX.:4-40 X 0.188 INCH,BRS | 73743 | 2X12161-402 |
| -229 | 214-1139-02 | | | 1 | . . . | SPRING,FLAT:GREEN COLORED | 80009 | 214-1139-02 |
| | 214-1139-03 | | | 1 | . . . | SPRING,FLAT:RED COLORED | 80009 | 214-1139-03 |
| -230 | 214-1752-00 | | | 1 | . . . | ROLLER,DETENT: | 80009 | 214-1752-00 |
| -231 | 401-0180-00 | | | 1 | . . . | BEARING,CAM SW:FRONT | 80009 | 401-0180-00 |
| -232 | 348-0253-00 | | | 1 | | GROMMET,PLASTIC:1.24 X 0.739 X 0.108" OA | 80009 | 348-0253-00 |
| -233 | 407-1127-00 | | | 1 | | BRACKET,PREAMP:REAR,BRASS CU-SN-ZN PL | 80009 | 407-1127-00 |
| | | | | | | (ATTACHING PARTS) | | |
| -234 | 210-0586-00 | | | 2 | | NUT,PLAIN,EXT W:4-40 X 0.25 INCH,STL | 78189 | 211-041800-00 |
| | | | | | | - - - * - - - | | |
| -235 | ----- ----- | | | 1 | | CKT BOARD ASSY:VERT OUTPUT(SEE A2 EPL) | | |
| | | | | | | (ATTACHING PARTS) | | |
| -236 | 211-0244-00 | | | 2 | | SCR,ASSEM WSHR:4-40 X 0.312 INCH,PNH STL | 78189 | OBD |
| | | | | | | - - - * - - - | | |
| | ----- ----- | | | - | . | CKT BOARD ASSY INCLUDES: | | |
| -237 | 131-0566-00 | | | 1 | . | LINK,TERM.CONNE:0.086 DIA X 2.375 INCH L | 55210 | L-2007-1 |
| -238 | 136-0514-00 | | | 1 | . | SOCKET,PLUG IN:MICROCIRCUIT,8 CONTACT | 73803 | CS9002-8 |
| -239 | 131-0608-00 | | | 6 | . | TERMINAL,PIN:0.365 L X 0.25 PH,BRZ,GOLD PL | 22526 | 47357 |
| -240 | 136-0252-04 | | | 41 | . | SOCKET,PIN TERM:0.188 INCH LONG | 22526 | 75060-007 |
| -241 | ----- ----- | | | 1 | . | MICROCIRCUIT:(SEE U2260 EPL) | | |
| -242 | 407-1149-00 | | | 1 | . | BRACKET,GND:MICROCIRCUIT,BRASS | 80009 | 407-1149-00 |
| | | | | | | (ATTACHING PARTS) | | |
| -243 | 220-0456-00 | | | 1 | | NUT,PLAIN,HEX.:6-32 X 0.25 INCH,STL | 73743 | 9038 |
| -244 | 210-0055-00 | | | 1 | | WASHER,LOCK:SPLIT,0.145 ID X 0.253 OD,STL | 83385 | OBD |
| | | | | | | - - - * - - - | | |
| -245 | 361-0008-00 | | | 3 | | SPACER,SLEEVE:0.11 ID X 0.25 OD X 0.28"H | 80009 | 361-0008-00 |
| -246 | 210-0202-00 | | | 1 | | TERMINAL,LUG:0.146 ID,LOCKING,BRZ TINNED | 78189 | 2104-06-00-2520N |
| | | | | | | (ATTACHING PARTS) | | |
| -247 | 211-0507-00 | | | 1 | | SCREW,MACHINE:6-32 X 0.312 INCH,PNH STL | 83385 | OBD |
| | | | | | | - - - * - - - | | |
| | 386-4225-00 | | | 1 | | SUPPORT CLAMP:ALUMINUM | 80009 | 386-4225-00 |
| -248 | 407-1128-00 | | | 1 | | BRKT,CRT SHIELD:REAR,NYLON | 80009 | 407-1128-00 |
| | | | | | | (ATTACHING PARTS) | | |
| -249 | 211-0507-00 | | | 2 | | SCREW,MACHINE:6-32 X 0.312 INCH,PNH STL | 83385 | OBD |
| -250 | 220-0419-00 | | | 2 | | NUT,PLAIN,SQ:6-32 X 0.312 INCH,STL | 83385 | OBD |
| -251 | 210-0803-00 | | | 1 | | WASHER,FLAT:0.15 ID X 0.032 THK,STL CD PL | 12327 | OBD |
| -252 | 210-0202-00 | | | 1 | | TERMINAL,LUG:0.146 ID,LOCKING,BRZ TINNED | 78189 | 2104-06-00-2520N |
| -253 | 210-0457-00 | | | 1 | | NUT,PLAIN,EXT W:6-32 X 0.312 INCH,STL | 83385 | OBD |
| | | | | | | - - - * - - - | | |
| -254 | 343-0217-00 | | | 1 | | CLAMP,COIL:Y-AXIS | 80009 | 343-0217-00 |
| | | | | | | (ATTACHING PARTS) | | |
| -255 | 211-0147-00 | | | 2 | | SCREW,MACHINE:4-40 X 0.25 INCH,PNH STL | 83385 | OBD |
| -256 | 210-0994-00 | | | 2 | | WASHER,FLAT:0.125 ID X 0.25" OD,STL | 86928 | 5714-147-20N |
| | | | | | | - - - * - - - | | |

| Fig. & Index No. | Tektronix Part No. | Serial/Model No. Eff | Dscont | Qty | 1 2 3 4 5 Name & Description | Mfr Code | Mfr Part Number |
|---|---|---|---|---|---|---|---|
| 2-257 | ----- ----- | | | 1 | COIL,DEFLECTION:Y-AXIS(SEE L14165 EPL) | | |
| -258 | 348-0145-00 | | | 1 | GROMMET,PLASTIC:U-SHP,1.0 X 0.42 INCH | 80009 | 348-0145-00 |
| -259 | 200-1459-00 | | | 1 | COVER,CRT:REAR | 80009 | 200-1459-00 |
| | | | | | (ATTACHING PARTS) | | |
| -260 | 211-0244-00 | | | 2 | SCR,ASSEM WSHR:4-40 X 0.312 INCH,PNH STL | 78189 | OBD |
| | | | | | - - - * - - - | | |
| -261 | 386-2246-00 | | | 1 | SUPPORT,CRT:REAR | 80009 | 386-2246-00 |
| -262 | 337-1644-00 | | | 1 | SHLD,ELECTRICAL:CRT NECK | 80009 | 337-1644-00 |
| | 198-4146-00 | | | 1 | WIRE SET,ELEC: | 80009 | 198-4146-00 |
| -263 | 175-0825-00 | | | FT | . WIRE,ELECTRICAL:2 WIRE RIBBON | 80009 | 175-0825-00 |
| -264 | 175-0826-00 | | | FT | . WIRE,ELECTRICAL:3 WIRE RIBBON | 80009 | 175-0826-00 |
| -265 | 175-0827-00 | | | FT | . WIRE,ELECTRICAL:4 WIRE RIBBON | 08261 | SS-0426-710610C |
| -266 | 175-0828-00 | | | FT | . WIRE,ELECTRICAL:5 WIRE RIBBON | 08261 | OBD |
| -267 | 175-0829-00 | | | FT | . WIRE,ELECTRICAL:6 WIRE RIBBON | 08261 | SS-0626-710610C |
| -268 | 175-0830-00 | | | FT | . WIRE,ELECTRICAL:7 WIRE RIBBON | 08261 | SS-0726-710610C |
| -269 | 131-0707-00 | | | 111 | . CONNECTOR,TERM.:22-26 AWG,BRS& CU BE GOLD | 22526 | 47439 |
| | 131-0472-00 | | | 4 | . CONNECTOR,PIN:FEMALE | | |
| -270 | 352-0169-00 | | | 14 | . HLDR,TERM CONN:2 WIRE BLACK | 80009 | 352-0169-00 |
| -271 | 352-0161-00 | | | 8 | . HLDR,TERM CONN:3 WIRE BLACK | 80009 | 352-0161-00 |
| -272 | 352-0162-00 | B010100 | B010799 | 1 | . HLDR,TERM CONN:4 WIRE BLACK | 80009 | 352-0162-00 |
| | 352-0162-01 | B010800 | | 1 | . CONN BODY,PL,EL:4 WIRE BROWN | 80009 | 352-0162-01 |
| -273 | 352-0163-00 | | | 3 | . CONN BODY,PL,EL:5 WIRE BLACK | 80009 | 352-0163-00 |
| -274 | 352-0164-00 | | | 3 | . CONN BODY,PL,EL:6 WIRE BLACK | 80009 | 352-0164-00 |
| -275 | 352-0165-00 | | | 3 | . CONN BODY,PL,EL:7 WIRE BLACK | 80009 | 352-0165-00 |
| -276 | 352-0166-00 | | | 1 | . CONN BODY,PL,EL:8 WIRE BLACK | 80009 | 352-0166-00 |
| | 195-0528-00 | XB010850 | | 1 | LEAD,ELECTRICAL:22 AWG,2.0 L | 80009 | 195-0528-00 |

For Service Manuals Contact
MAURITRON TECHNICAL SERVICES
8 Cherry Tree Rd, Chinnor
Oxon OX9 4QY
Tel:- 01844-351694 Fax:- 01844-352554
Email:- enquiries@mauritron.co.uk

## MANUAL CHANGE INFORMATION

At Tektronix, we continually strive to keep up with latest electronic developments by adding circuit and component improvements to our instruments as soon as they are developed and tested.

Sometimes, due to printing and shipping requirements, we can't get these changes immediately into printed manuals. Hence, your manual may contain new change information on following pages.

A single change may affect several sections. Since the change information sheets are carried in the manual until all changes are permanently entered, some duplication may occur. If no such change pages appear following this page, your manual is correct as printed.

## SERVICE NOTE

Because of the universal parts procurement problem, some electrical parts in your instrument may be different from those described in the Replaceable Electrical Parts List. The parts used will in no way alter or compromise the performance or reliability of this instrument. They are installed when necessary to ensure prompt delivery to the customer. Order replacement parts from the Replaceable Electrical Parts List.

# CALIBRATION TEST EQUIPMENT REPLACEMENT

## Calibration Test Equipment Chart

This chart compares TM 500 product performance to that of older Tektronix equipment. Only those characteristics where significant specification differences occur, are listed. In some cases the new instrument may not be a total functional replacement. Additional support instrumentation may be needed or a change in calibration procedure may be necessary.

**Comparison of Main Characteristics**

| | | |
|---|---|---|
| DM 501 replaces 7D13 | | |
| PG 501 replaces 107 | PG 501 - Risetime less than 3.5 ns into 50 Ω. | 107 - Risetime less than 3.0 ns into 50 Ω. |
| 108 | PG 501 - 5 V output pulse; 3.5 ns Risetime | 108 - 10 V output pulse 1 ns Risetime |
| PG 502 replaces 107 | | |
| 108 | PG 502 - 5 V output | 108 - 10 V output |
| 111 | PG 502 - Risetime less than 1 ns; 10 ns Pretrigger pulse delay | 111 - Risetime 0.5 ns; 30 to 250 ns Pretrigger pulse delay |
| PG 508 replaces 114 | Performance of replacement equipment is the same or better than equipment being replaced. | |
| 115 | | |
| 2101 | | |
| PG 506 replaces 106 | PG 506 - Positive-going trigger output signal at least 1 V: High Amplitude output, 60 V. | 106 - Positive and Negative-going trigger output signal, 50 ns and 1 V; High Amplitude output, 100 V. |
| 067-0502-01 | PG 506 - Does not have chopped feature. | 0502-01 - Comparator output can be alternately chopped to a reference voltage. |
| SG 503 replaces 190, 190A, 190B | SG 503 - Amplitude range 5 mV to 5.5 V p-p. | 190B - Amplitude range 40 mV to 10 V p-p. |
| 191 | | |
| 067-0532-01 | SG 503 - Frequency range 250 kHz to 250 MHz. | 0532-01 - Frequency range 65 MHz to 500 MHz. |
| SG 504 replaces 067-0532-01 | SG 504 - Frequency range 245 MHz to 1050 MHz. | 0532-01 - Frequency range 65 MHz to 500 MHz. |
| 067-0650-00 | | |
| TG 501 replaces 180, 180A | TG 501 - Trigger output-slaved to marker output from 5 sec through 100 ns. One time-mark can be generated at a time. | 180A - Trigger pulses 1, 10, 100 Hz; 1, 10, and 100 kHz. Multiple time-marks can be generated simultaneously. |
| 181 | | 181 - Multiple time-marks |
| 184 | TG 501 - Trigger output-slaved to market output from 5 sec through 100 ns. One time-mark can be generated at a time. | 184 - Separate trigger pulses of 1 and 0.1 sec; 10, 1, and 0.1 ms; 10 and 1 μs. |
| 2901 | TG 501 - Trigger output-slaved to marker output from 5 sec through 100 ns. One time-mark can be generated at a time. | 2901 - Separate trigger pulses, from 5 sec to 0.1 μs. Multiple time-marks can be generated simultaneously. |

**NOTE: All TM 500 generator outputs are short-proof. All TM 500 plug-in instruments require TM 500-Series Power Module.**

# IMPORTANT NOTE

This instrument is fitted with a power cord which complies with B. S. 4743/I. E. C. 348 specifications.

The connections are as follows:-

| | |
|---|---|
| Green/Yellow | EARTH |
| Brown | LIVE |
| Blue | NEUTRAL |

Ensure that the correctly rated fuse is selected for your operating range. (Refer to OPERATING INSTRUCTIONS section at front of manual).

Unless otherwise stated your instrument is shipped ready for operation from a 240V nominal line-voltage source and fitted with the appropriate fuse.

Please amend your manual to reflect the above changes, the new power cord part number is 161-0086-02, except in the type 7704A instrument where it is 161-0086-01.

If a separate power cord retainer is required order part number 343-0170-00.

G5/773

Addendum to G5/773

In the type 7704A instrument from serial number 100180 upwards the part number of the detached power cord is 161-0100-00.

GUERNSEY TYPE 465B - TENTATIVE S/N 100001

ELECTRICAL PARTS LIST CHANGE

CHANGE TO -

| | | |
|---|---|---|
| F14500 | 159-0042-00 | Fuse, .75 amps 250 V |

Day 1/879

---

GUERNSEY TYPE 465B - TENTATIVE S/N 100001

ELECTRICAL PARTS LIST AND SCHEMATIC CHANGE

ADD -

| | | |
|---|---|---|
| A1L1038 | 276-0507-00 | Bead, Shielding 0.6 uH |

3685/879

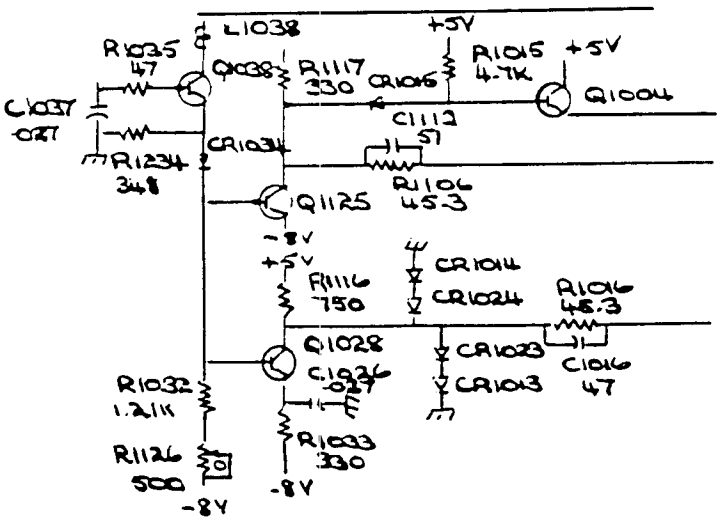


1

GUERNSEY TYPE 465B TENTATIVE S/N 100361

ELECTRICAL PARTS LIST AND SCHEMATIC CHANGE

ADD -

A1L1118 276-0507-00 Shielding Bead 0.6 uH

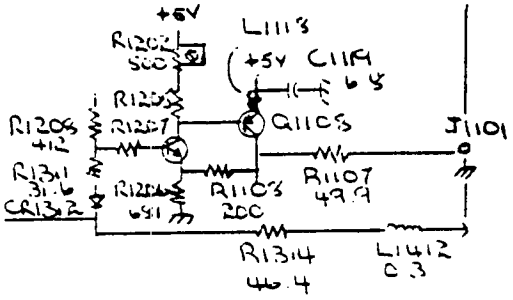


3

3710/1079

GUERNSEY TYPE 465B - TENTATIVE S/N 100561

ELECTRICAL PARTS LIST CHANGE

CHANGE TO -

U4269 156-0048-00 Microcircuit Li = 5

3700/979

GUERNSEY TYPE 465B - TENTATIVE S/N 100311

ELECTRICAL PARTS LIST CHANGE

ADD -

| | | |
|---|---|---|
| A7L7514 | 276-0507-00 | Bead, Shielding 0.6 uH |

Note: Add shielding bead to base of Q7514

3716/1079

---

GUERNSEY TYPE 465B - TENTATIVE S/N 100561

ELECTRICAL PARTS LIST CHANGE

REMOVE -

| | | | | |
|---|---|---|---|---|
| A1C1016 | 281-0763-00 | Cap., Fxd., Cer., Di: | 47 pF | 100 V |

CHANGE TO -

| | | |
|---|---|---|
| Q1028 | 151-0221-00 | Transistor, Silicon |

3720/1079

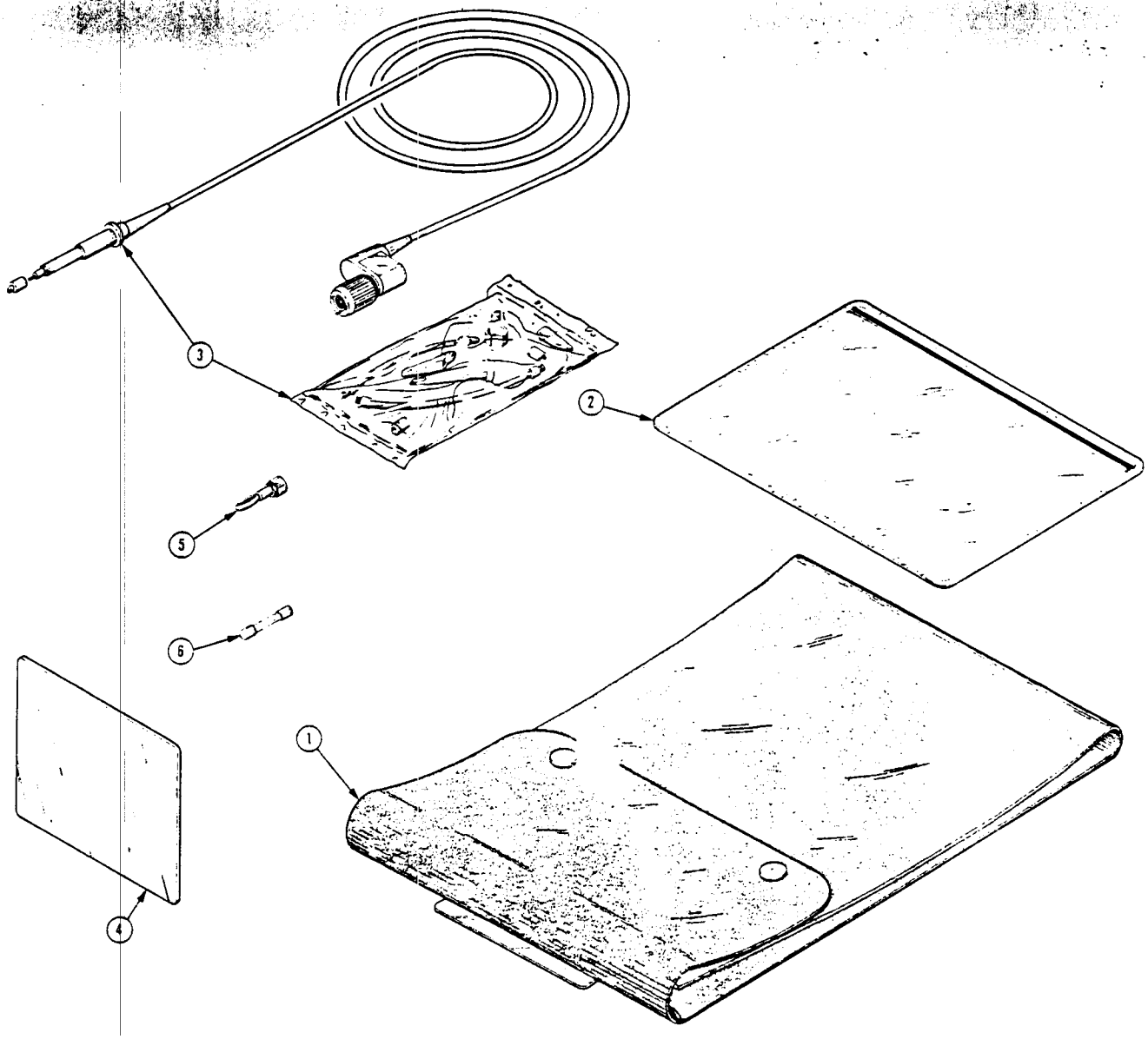


| Fig. & Index No. | Tektronix Part No. | Serial/Model No. Eff | Dscont | Qty 1 2 3 4 5 | Name & Description | Mfr Code | Mfr Part Number |
|---|---|---|---|---|---|---|---|
| 5-1 | 016-0535-02 | | | 1 | POUCH,ACCESSORY:W/HARDWARE,STANDARD | 80009 | 016-0535-02 |
| | 016-0594-00 | | | 1 | POUCH,ACCESSORY:W/HARDWARE,(WITH DM) | 80009 | 016-0594-00 |
| -2 | 016-0537-00 | | | 1 | POUCH,ACCESSORY:VINYL,W/ZIPPER | 05006 | OBD |
| -3 | 010-6105-03 | | | 2 | PROBE,VOLTAGE:P6105,2 METER,10X,W/ACCESS | 80009 | 010-6105-03 |
| | 010-6430-00 | | | 1 | LEAD,TEST:1.5 METERS LONG,TEMP(WITH DM44) | 80009 | 010-6430-00 |
| -4 | 337-1674-01 | | | 1 | SHLD,IMPLOSION:CLEAR | 80009 | 337-1674-01 |
| -5 | 134-0016-01 | | | 1 | PLUG,TIP:W/BINDING POST | 80009 | 134-0016-01 |
| -6 | 159-0016-00 | | | 2 | FUSE,CARTRIDGE:3AG,1.5A,250V,FAST-BLOW | 71400 | AGC 1 1/2 |
| | ----- ----- | | | - | * FOR 115V OPERATION | | |
| | 159-0042-00 | | | 1 | FUSE,CARTRIDGE:3AG,0.75A,250V,FAST-BLOW | 71400 | AGC 3/4 |
| | ----- ----- | | | - | * FOR 230V OPERATION | | |
| | 161-0094-00 | | | 1 | CABLE ASSY,PWR:3 WIRE,36 INCHES LONG | 16428 | KH7667 |
| | ----- ----- | | | - | * OPTION 7 ONLY | | |
| | 003-0120-00 | | | 1 | LEAD,TEST:PAIR(WITH DM) | 80009 | 003-0120-00 |
| | 070-2756-00 | | | 1 | MANUAL,TECH:OPERATORS,465B W/DM44 | 80009 | 070-2756-00 |
| | 070-2757-00 | | | 1 | MANUAL,TECH:SERVICE,465B | 80009 | 070-2757-00 |
| | 070-2036-01 | | | 1 | MANUAL,TECH:SERVICE,DM44 | 80009 | 070-2036-01 |

# DIAGRAMS AND CIRCUIT BOARD ILLUSTRATIONS

## Symbols

Graphic symbols and class designation letters are based on ANSI Standard Y32.2-1975.

Logic symbology is based on ANSI Y32.14-1973 in terms of positive logic. Logic symbols depict the logic function performed and may differ from the manufacturer's data.

The overline on a signal name indicates that the signal performs its intended function when it is in the low state.

Abbreviations are based on ANSI Y1.1-1972.

Other ANSI standards that are used in the preparation of diagrams by Tektronix, Inc. are:

| | |
|---|---|
| Y14.15, 1966 | Drafting Practices. |
| Y14.2, 1973 | Line Conventions and Lettering. |
| Y10.5, 1968 | Letter Symbols for Quantities Used in Electrical Science and Electrical Engineering. |

American National Standard Institute
1430 Broadway
New York, New York 10018

## Component Values

Electrical components shown on the diagrams are in the following units unless noted otherwise:

Capacitors = Values one or greater are in picofarads (pF). Values less than one are in microfarads (μF).
Resistors = Ohms (Ω).

## Assembly Numbers and Grid Coordinates

Each assembly in the instrument is assigned an assembly number (e.g., A20). The assembly number appears on the circuit board outline on the diagram, in the title for the circuit board component location illustration, and in the lookup table for the schematic diagram and corresponding component locator illustration. The Replaceable Electrical Parts list is arranged by assemblies in numerical sequence; the components are listed by component number (see following illustration for constructing a component number).

COMPONENT NUMBER EXAMPLE

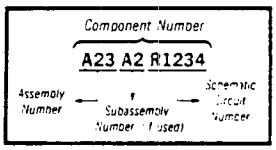


Chassis mounted components have no Assembly Number prefix—see end of Replaceable Electrical Parts List

The schematic diagram and circuit board component location illustration have grids. A lookup table with the grid coordinates is provided for ease of locating the component. Only the components illustrated on the facing diagram are listed in the lookup table. When more than one schematic diagram is used to illustrate the circuitry on a circuit board, the circuit board illustration may only appear opposite the first diagram on which it was illustrated; the lookup table will list the diagram number of other diagrams that the circuitry of the circuit board appears on.

**The following special symbols may appear on the diagrams:**

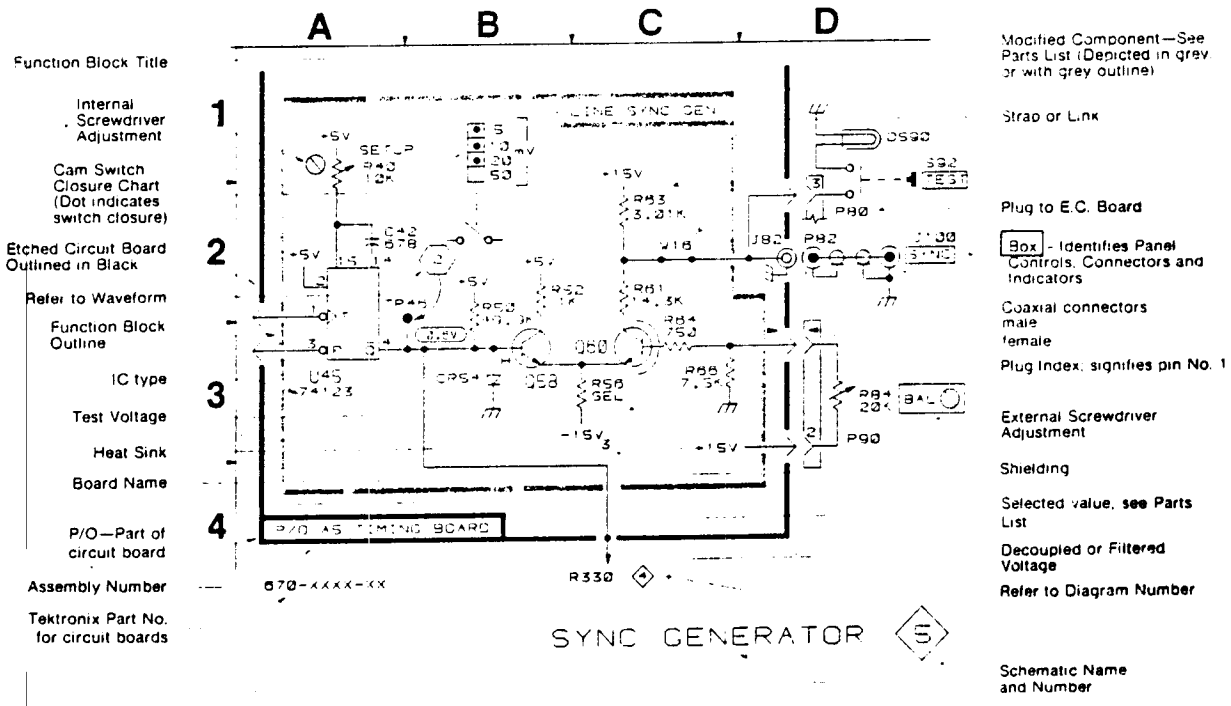


@

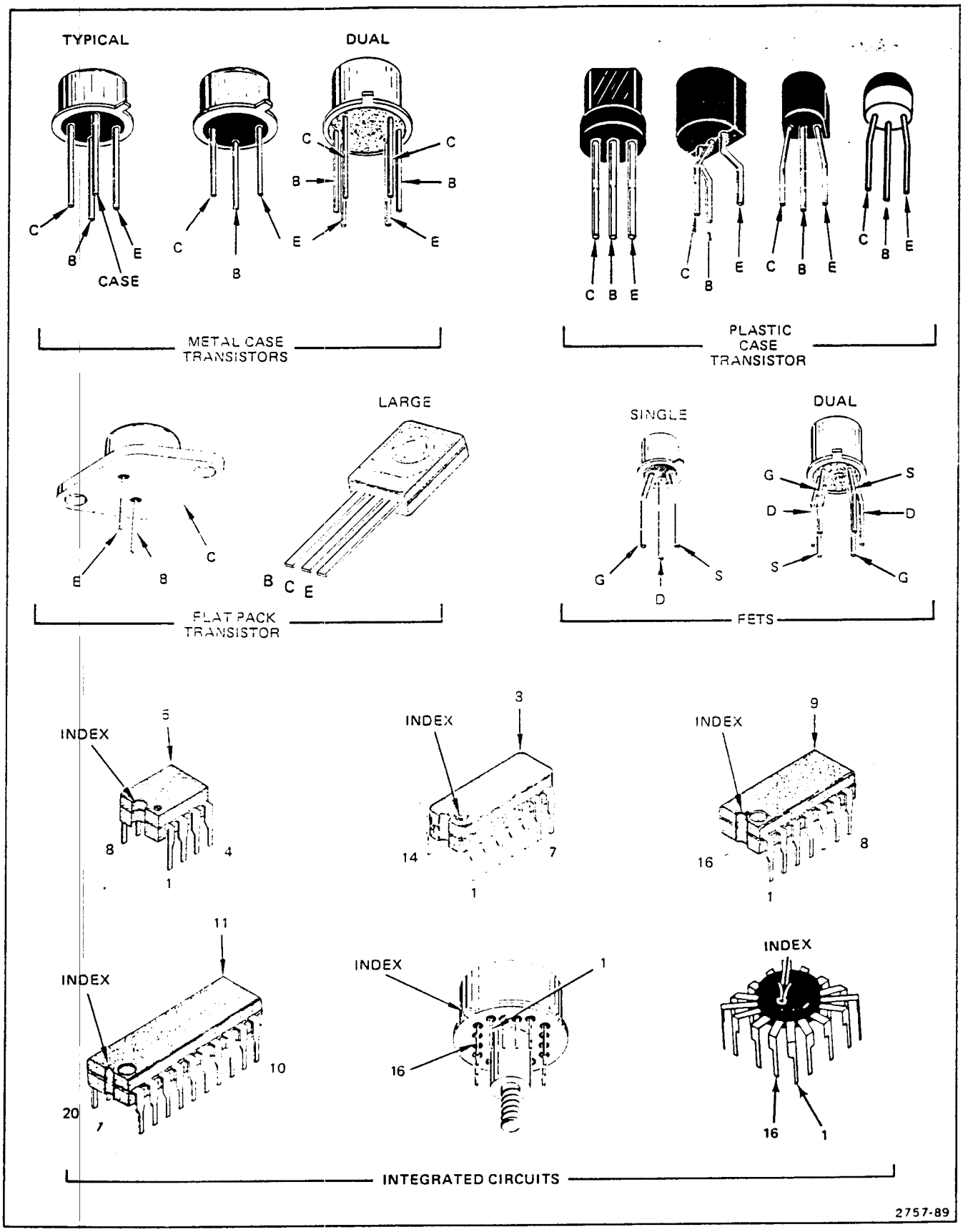


Figure 8-1. Semiconductor lead configurations.

# AC WAVEFORMS

The waveforms adjacent to the circuit diagrams were obtained using the recommended test equipment and setup given below unless otherwise noted.

### RECOMMENDED TEST EQUIPMENT

| Item | Specifications | Example |
|---|---|---|
| Test Oscilloscope | Frequency response: DC-100 MHz. Deflection factor: 5 mV/div to 5 V/div (to 50 V/div with 10X probe). Input impedance: 1 MΩ, 20 pf. Sweep rate: 5 ms to 0.5 μs/div. | TEKTRONIX 465B or equivalent. |
| Probe | Fast-rise 10X probe compatible with the vertical amplifier of the test oscilloscope. | TEKTRONIX P6065 or equivalent. |

## 465B CONTROL SETTINGS

### CRT Controls

| | |
|---|---|
| INTENSITY | As desired |
| FOCUS | As desired |
| SCALE ILLUM | As desired |

### Vertical Controls (both A and B if applicable)

| | |
|---|---|
| VOLTS/DIV | 5 mV |
| VAR | Calibrated detent |
| POSITION | Midrange |
| AC-GND-DC | DC |
| VERT MODE | CH 1 and CHOP |
| INVERT | Off (button out) |
| 20 MHz BW LIMIT | Full bandwidth (button out) |

### Sweep Controls

| | |
|---|---|
| TIME/DIV (both) | 1 ms |
| VAR | Calibrated detent |
| HORIZ DISPLAY | A |
| X10 MAG | Off (button out) |
| POSITION | Midrange |
| DELAY TIME POSITION | Fully counterclockwise |

### Trigger Controls (both A and B unless otherwise noted)

| | |
|---|---|
| COUPLING | AC |
| SOURCE | NORM |
| TRIG MODE | AUTO |
| SLOPE | + |
| A TRIGGER LEVEL | As needed for a stable display (locked on positive transition of square-wave input). |
| A TRIGGER HOLDOFF | NORM |

# TEST OSCILLOSCOPE SETUP

Apply a 20 mV p-p, positive-going square wave from the Calibration Generator to the CH 1 or X input connector. Connect the 465B A +GATE (from the 465B rear panel) to the test oscilloscope external trigger input connector. Use no terminations.

465B Oscilloscope control settings required to obtain valid waveforms are given with each set of waveforms. Changes from the preliminary control settings for the other controls is not required.

### Test Oscilloscope Control Settings

All controls as needed for the best display except as noted below:

| | |
|---|---|
| Vert Mode | Ch 1 |
| Ac-Gnd-Dc | As required for the measurement to be made |
| Volts/Div | As needed for each waveform |
| Trigger Source | Ext (465B A +GATE) |
| Trigger Coupling | Ac |
| Trigger Mode | Auto |
| Time/Div | As needed for each waveform |

Connect a 10X probe to the Channel 1 input of the test oscilloscope. Apply the probe tip to the test point or component lead as indicated on the schematic and the component board layout Figure associated with that schematic.

# DC VOLTAGES

Typical voltage measurements were obtained with the instrument operating under the conditions noted in the control settings adjacent to each schematic diagram. Voltage measurements were taken with no signal applied to the vertical or trigger inputs. All voltages measured with reference to chassis ground. Voltages rounded to the nearest tenth of a volt.

RECOMMENDED TEST EQUIPMENT

| Item | Specifications | Example |
|---|---|---|
| Digital Multimeter (for voltages up to 1 kV | Range: 0 to 1 kV.<br>Input Impedance: 10 MΩ. | TEKTRONIX DM 501 Digital Multimeter.<br>TEKTRONIX Oscilloscope with DM 44 Option. |
| DC Voltmeter (for voltages above 1 kV) | Range: 0 to 3 kV.<br>Input Impedance: 20 kΩ/V. | Triplett Model 630NA. |

# CH 1 VERTICAL PREAMP

## DIAGRAM 1

### P/O A1 ASSY

| CIRCUIT NUMBER | SCHEM LOCATION | BOARD LOCATION | CIRCUIT NUMBER | SCHEM LOCATION | BOARD LOCATION | CIRCUIT NUMBER | SCHEM LOCATION | BOARD LOCATION |
|---|---|---|---|---|---|---|---|---|
| C1016* | 8J | 1C | Q1125 | 7H | 2C | R1188 | 5B | 1H |
| C1026 | 8H | 1C | Q1145 | 6H | 2E | R1190 | 5B | 1I |
| C1037 | 7G | 1D | Q1150 | 5G | 1E | R1234 | 7H | 2D |
| C1048 | 4H | 1E | Q1155 | 4F | 2F | R1242 | 5H | 2E |
| C1071 | 5A | 1G | Q1175 | 4D | 2G | R1243 | 4J | 2D |
| C1072 | 5A | 1G | Q1250 | 5G | 2E | R1244 | 6J | 2E |
| C1075 | 5B | 1H | Q1297A | 4A | 2J | R1246 | 6G | 2E |
| C1091 | 5A | 1I | Q1297D | 4A | 2J | R1247 | 6G | 2E |
| C1095 | 3A | 1J | Q1355 | 6F | 2F | R1252 | 5G | 2E |
| C1112 | 7I | 1B | Q1375 | 6D | 2G | R1253 | 5G | 2E |
| C1135 | 5J | 1D | | | | R1254 | 5G | 2F |
| C1142 | 6H | 1D | R1015 | 6I | 1B | R1256 | 4F | 2F |
| C1144 | 5H | 1E | R1016 | 8J | 1C | R1258 | 6F | 2F |
| C1152 | 4G | 2E | R1032 | 8H | 1D | R1274 | 4D | 2G |
| C1173 | 5A | 1G | R1033 | 8H | 1D | R1275 | 5D | 2G |
| C1192 | 5B | 1I | R1035 | 7H | 1D | R1276 | 5D | 2H |
| C1287 | 3C | 2I | R1042 | 4H | 1D | R1278 | 3C | 2H |
| C1335 | 2D | 2D | R1052 | 5G | 1E | R1285 | 7A | 2H |
| C1353 | 6G | 3F | R1055 | 5I | 1F | R1296 | 4A | 2I |
| C1384 | 7C | 2I | R1064 | 5I | 1G | R1299 | 4A | 2J |
| C1385 | 7B | 2I | R1072 | 5A | 1G | R1353 | 6G | 3F |
| C1396 | 4A | 3I | R1081 | 5A | 1H | R1358 | 6E | 3F |
| C1398 | 4A | 2J | R1082 | 5A | 1H | R1376 | 6E | 3G |
| | | | R1087 | 5B | 1I | R1382 | 6D | 2H |
| CR1013 | 8I | 1B | R1095 | 4A | 1J | R1384 | 7C | 2I |
| CR1014 | 8I | 1B | R1106 | 7I | 2B | R1385 | 7B | 2I |
| CR1023 | 8I | 1C | R1116 | 8H | 1C | R1391 | 6B | 3I |
| CR1024 | 8I | 1C | R1117 | 7H | 2C | R1392 | 6B | 3I |
| CR1034 | 7H | 1D | R1126 | 9G | 2C | R1482 | 5D | 3H |
| CR1193 | 4B | 1I | R1135 | 5J | 2D | R1484 | 6A | 3H |
| CR1263 | 4F | 2F | R1136 | 6H | 1D | R1486 | 7C | 3I |
| CR1264 | 6F | 2F | R1143 | 5H | 1D | R1487 | 7B | 3I |
| CR1298 | 3A | 2J | R1144 | 5H | 1E | R1488 | 7B | 3I |
| | | | R1147 | 4G | 1E | | | |
| J1001 | 8J | 1B | R1148 | 4G | 1E | RT1267 | 4E | 2G |
| J1002 | 7J | 1B | R1152 | 4G | 2E | | | |
| J1004 | 7J | 1B | R1159 | 4E | 2F | U1290 | 3D | 2I |
| | | | R1168 | 6F | 2G | | | |
| Q1004 | 7I | 1B | R1173 | 5A | 1G | VR1096 | 3A | 1J |
| Q1028 | 8H | 1C | R1176 | 5A | 1H | VR1356 | 5E | 3F |
| Q1038 | 6H | 1D | R1185 | 5B | 1H | | | |
| Q1045 | 4H | 1E | R1186 | 4D | 2H | | | |
| Q1062 | 5I | 1F | | | | | | |

*P/O A1 ASSY also shown on diagram(s) 2, and 3*

*See Parts List for serial number ranges.

### P/O A3 ASSY

| CIRCUIT NUMBER | SCHEM LOCATION | BOARD LOCATION | CIRCUIT NUMBER | SCHEM LOCATION | BOARD LOCATION | CIRCUIT NUMBER | SCHEM LOCATION | BOARD LOCATION |
|---|---|---|---|---|---|---|---|---|
| C30 | 2C | 1B | C37 | 2I | 2D | R3036 | 2H | 1D |
| C31 | 2C | 2B | | | | R3039 | 2I | 2E |
| C32 | 2E | 1C | R3014 | 1B | 1A | | | |
| C33 | 2E | 2C | R3015 | 2B | 1A | W3031 | 2D | 1C |
| C34 | 2G | 1C | R3030 | 2C | 1C | W3034 | 2F | 1C |
| C35 | 2G | 2C | R3032 | 2E | 1C | W3035 | 2G | 1D |
| C36 | 2H | 1D | R3033 | 2E | 1C | | | |

*P/O A3 ASSY also shown on diagram 2*

### CHASSIS MOUNTED PARTS

| CIRCUIT NUMBER | SCHEM LOCATION | BOARD LOCATION | CIRCUIT NUMBER | SCHEM LOCATION | BOARD LOCATION | CIRCUIT NUMBER | SCHEM LOCATION | BOARD LOCATION |
|---|---|---|---|---|---|---|---|---|
| C3042 | 2J | CHASSIS | J13010 | 2A | CHASSIS | R3045 | 2J | CHASSIS |
| C13010 | 2A | CHASSIS | | | | | | |
| C13012 | 2A | CHASSIS | R3042 | 2J | CHASSIS | | | |

# 465B CONTROL SETTINGS

## DC Voltages

| | |
|---|---|
| VERT MODE | CH 2 |
| AC-GND-DC (both) | GND |

## AC Waveforms

| | |
|---|---|
| VERT MODE | CH 2 |
| CH 2 AC-GND-DC | DC |
| VOLTS/DIV | 5 mV |
| Input | 20 mV positive-going square wave |

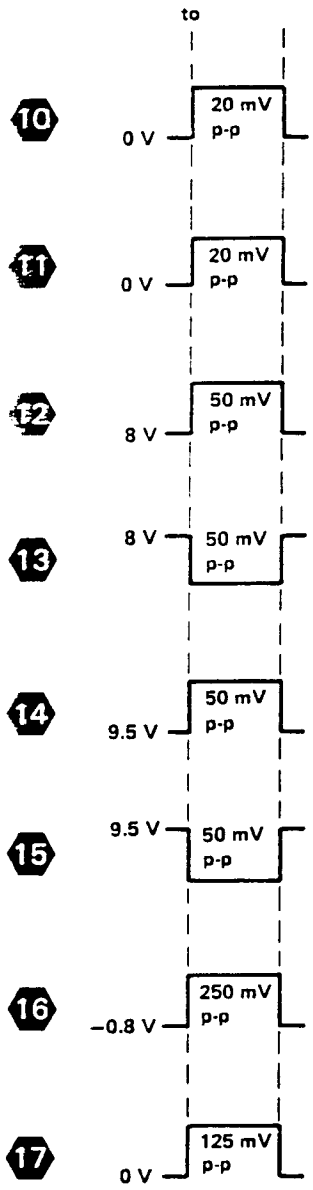


2757-97

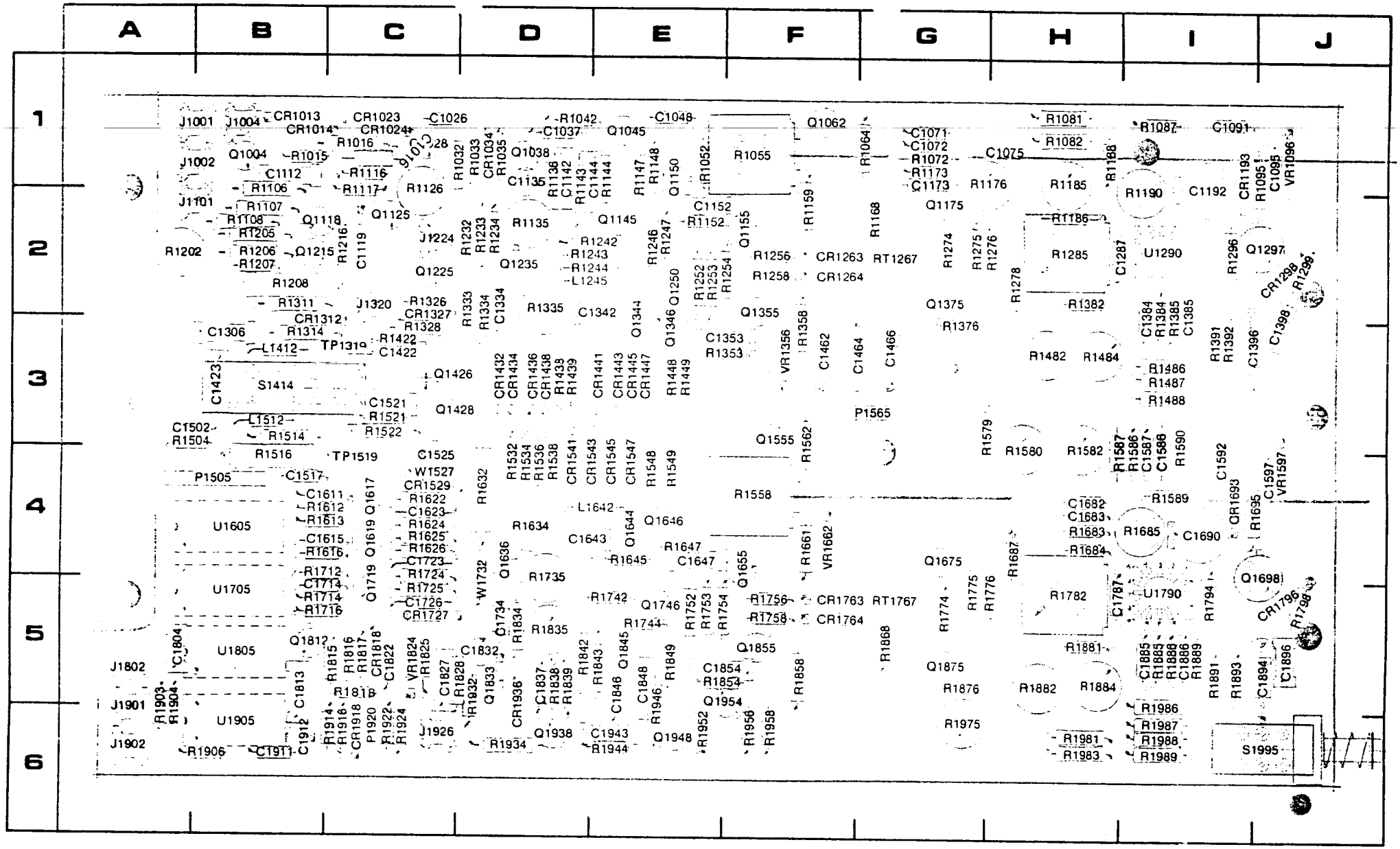


Figure 8-3. A1 Vertical Preamplifier circuit board.

2757-110

**COMPONENT NUMBER EXAMPLE**

Component Number

**A23 A2 R1234**

Assembly Number — Subassembly Number (if used) — Schematic Circuit Number

Static Sensitive Devices
*See Maintenance Section*

A3 & A1-BOARD
COMPONENT LOCATIONS

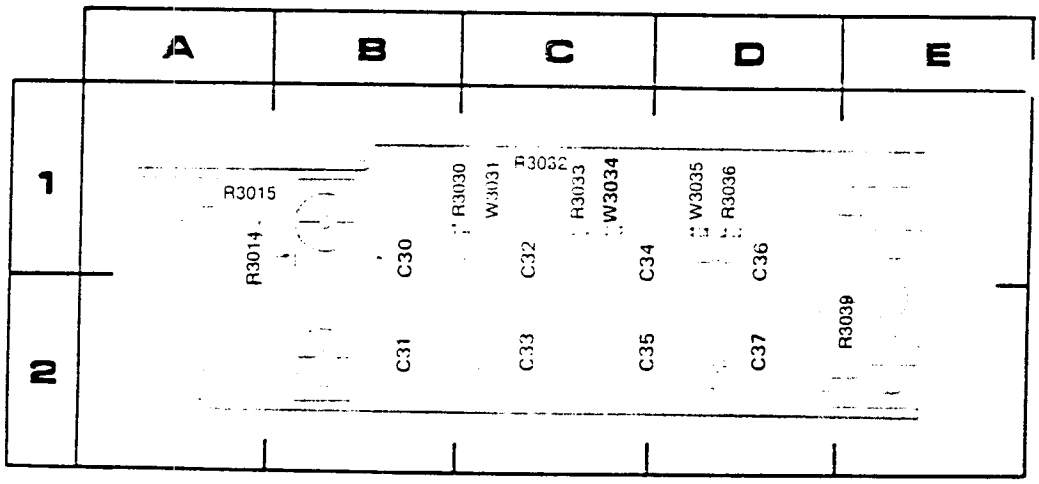


2757-38

Figure 8-2. A3-Attenuator circuit board.

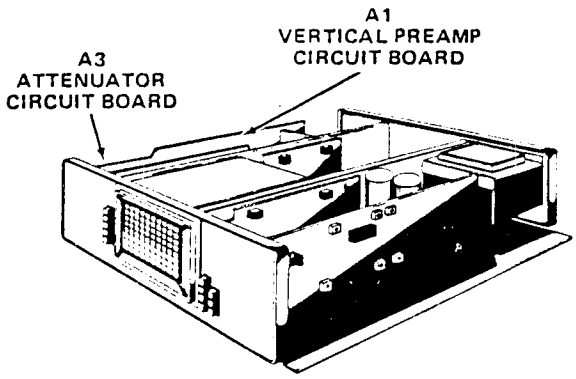

# 465B CONTROL SETTINGS

## DC Voltages

| | |
|---|---|
| VERT MODE | CH 1 |
| AC-GND-DC (both) | GND |

## AC Waveforms

| | |
|---|---|
| VERT MODE | CH 1 |
| CH 1 AC-GND-DC | DC |
| VOLTS/DIV | 5 mV |
| Input | 20 mV positive-going square wave |

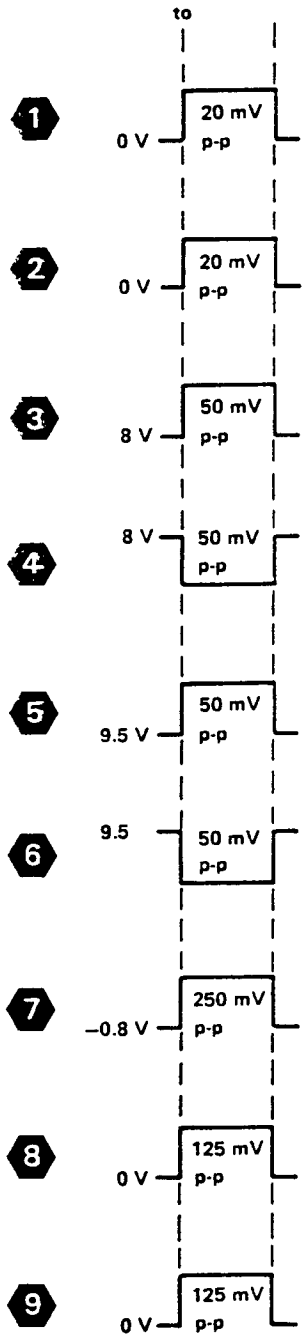


2757-96

For Service Manuals Contact
MAURITRON TECHNICAL SERVICES
8 Cherry Tree Rd, Chinnor
Oxon OX9 4QY
Tel:- 01844-351694 Fax:- 01844-352554
Email:- enquiries@mauritron.co.uk

# A & B TRIGGER GENERATOR DIAGRAM 6

**P/O A7 ASSY**

| CIRCUIT NUMBER | SCHEM LOCATION | BOARD LOCATION |
|---|---|---|
| C7006 | 2B | 1B |
| C7008 | 2A | 1B |
| C7018 | 1C | 1C |
| C7019 | 1D | 1D |
| C7025 | 1E | 1D |
| C7027 | 3E | 1D |
| C7028 | 2G | 1D |
| C7116 | 2C | 2C |
| C7128 | 2H | 2E |
| C7134 | 2L | 2E |
| C7227 | 6G | 3D |
| C7229 | 7E | 3D |
| C7244 | 5K | 3F |
| C7313 | 4C | 4C |
| C7317 | 5C | 3C |
| C7321 | 4E | 3D |
| C7329 | 5H | 4E |
| C7404 | 6A | 4B |
| C7406 | 6A | 4B |
| C7425 | 8K | 4D |
| C7435 | 8J | 4E |
| C7442 | 5I | 4F |
| C7443 | 5L | 4F |
| C7505 | 5A | 5B |
| C7506 | 6A | 5B |
| C7508 | 6B | 5B |
| C7517 | 4D | 5C |
| C7519 | 8J | 5D |
| C7529 | 8L | 5D |
| C7536 | 7J | 5E |
| C7565 | 5A | 5H |
| CR7046 | 2L | 1F |
| CR7120 | 2E | 2D |
| CR7146 | 2M | 2F |
| CR7147 | 3N | 1G |
| CR7148 | 1N | 2G |
| CR7322 | 6E | 3D |
| CR7349 | 6N | 3G |
| CR7350 | 5N | 4G |
| CR7521 | 9J | 5D |
| CR7536 | 7J | 5E |
| | | |
| J4541 | 5A | 5I |
| J7206 | 1A | 2B |
| J7212 | 2A | 2C |
| J7215 | 1A | 2C |
| J7524 | 8M | 5D |
| J7535 | 7M | 5E |
| | | |
| L7043 | 2K | 1E |
| L7137 | 2L | 2E |
| L7341 | 5K | 3F |
| L7441 | 5L | 4F |
| L7525 | 8K | 5D |
| | | |
| P7010 | 2F | 1B |
| P7305 | 5F | 4B |
| | | |
| Q7124A&B | 2E | 2D |
| Q7142 | 3L | 2F |
| Q7143 | 1L | 2F |
| Q7324A&B | 6E | 3D |
| Q7344 | 6L | 4F |
| Q7345 | 4L | 4F |
| Q7422 | 8J | 4D |
| Q7424 | 7J | 4D |
| | | |
| R7009 | 2A | 1B |
| R7014 | 2D | 1C |
| R7020 | 2D | 1D |
| R7024 | 1D | 1D |
| R7025 | 1E | 1D |
| R7026 | 2G | 1D |
| R7027 | 3E | 1D |
| R7028 | 2G | 1E |
| R7029 | 2H | 1E |
| R7032 | 2G | 1E |
| R7033 | 3G | 1E |
| R7034 | 1J | 1E |
| R7035 | 3H | 1E |
| R7036 | 3H | 1E |
| R7037 | 1J | 1E |
| R7038 | 2K | 1E |
| R7042 | 2K | 1E |
| R7043 | 2K | 1F |
| R7044 | 3L | 1F |
| R7045 | 2N | 1F |
| R7046 | 2M | 1F |
| R7047 | 3M | 1F |
| R7048 | 2N | 1F |
| R7106 | 2A | 1B |
| R7111 | 1C | 2C |
| R7119 | 2D | 2D |
| R7121 | 2E | 2D |
| R7125 | 1E | 2D |
| R7126 | 2H | 2D |
| R7128 | 2H | 2D |
| R7132 | 4J | 2E |
| R7133 | 2I | 2E |
| R7134 | 2L | 2E |
| R7135 | 2M | 2E |
| R7142 | 2K | 2F |
| R7143 | 1L | 2F |
| R7145 | 1M | 2F |
| R7147 | 2M | 2F |
| R7150 | 2L | 2G |
| R7208 | 5A | 3B |
| R7213 | 5A | 3C |
| R7218 | 4A | 3C |
| R7224 | 5G | 3D |
| R7226 | 5G | 3D |
| R7228 | 6G | 3D |
| R7229 | 6H | 3D |
| R7232 | 5H | 3E |
| R7233 | 6G | 3E |
| R7234 | 6H | 3E |
| R7235 | 4J | 3E |
| R7236 | 5H | 3E |
| R7237 | 4J | 3E |
| R7238 | 5K | 3E |
| R7242 | 5K | 3F |
| R7243 | 6L | 3F |
| R7246 | 8M | 3F |
| R7248 | 8M | 3G |
| R7305 | 6A | 4B |
| R7306 | 6B | 4B |
| R7308 | 6D | 4B |
| R7316 | 4C | 4C |
| R7319 | 6D | 4D |
| R7325 | 4E | 4D |
| R7326 | 4E | 4D |
| R7327 | 6E | 3D |
| R7328 | 8I | 4E |
| R7329 | 5H | 4E |
| R7342 | 5I | 4F |
| R7343 | 5K | 3F |
| R7346 | 6M | 3F |
| R7347 | 4M | 4F |
| R7349 | 5M | 4G |
| R7402 | 6A | 4B |
| R7404 | 6A | 4B |
| R7406 | 6A | 4B |
| R7407 | 6A | 4B |
| R7408 | 6B | 4B |
| R7417 | 5D | 4D |
| R7421 | 4D | 4D |
| R7423 | 8K | 4D |
| R7432 | 7I | 4E |
| R7434 | 8K | 4E |
| R7435 | 8K | 4E |
| R7436 | 6H | 4E |
| R7437 | 6J | 4E |
| R7439 | 8K | 4E |
| R7441 | 5K | 4F |
| R7444 | 5L | 4F |
| R7445 | 4L | 4F |
| R7506 | 6A | 5B |
| R7516 | 5D | 5C |
| R7519 | 8J | 5C |
| R7521 | 9J | 5D |
| R7522 | 9L | 5D |
| R7525 | 7I | 5D |
| R7526 | 8J | 5D |
| R7533 | 7J | 5E |
| R7534 | 7L | 5E |
| R7545 | 5L | 4F |
| R7565 | 5A | 5H |
| | | |
| RT7147 | 2N | 2F |
| RT7349 | 5N | 4G |
| | | |
| S7015 | 1D | 1C |
| S7112 | 1A | 2C |
| S7312A | 3B | 3C |
| S7415 | 3D | 4C |
| | | |
| U7131 | 1J | 2E |
| U7131 | 4J | 2E |
| U7331 | 4J | 4E |
| | | |
| VR7047 | 3L | 1F |
| VR7145 | 1L | 2F |
| VR7346 | 6L | 3F |
| VR7446 | 4L | 4F |
| VR7520 | 7I | 5D |

*P/O A7 ASSY also shown on diagrams 3, 7, and 12*

# 465B CONTROL SETTINGS

## DC Voltages

| | |
|---|---|
| A TRIG MODE | NORM (sweep not running) |
| AC-GND-DC (both) | GND |

## AC Waveforms

| | |
|---|---|
| A TRIG MODE | AUTO (no trigger signal) |
| B TRIGGER SOURCE | STARTS AFTER DELAY |
| DELAY TIME POSITION | 5.00 |
| HORIZ DISPLAY | A INTEN |
| A TIME/DIV | 1 ms |
| B TIME/DIV | 0.1 ms |
| AC-GND-DC (both) | GND |

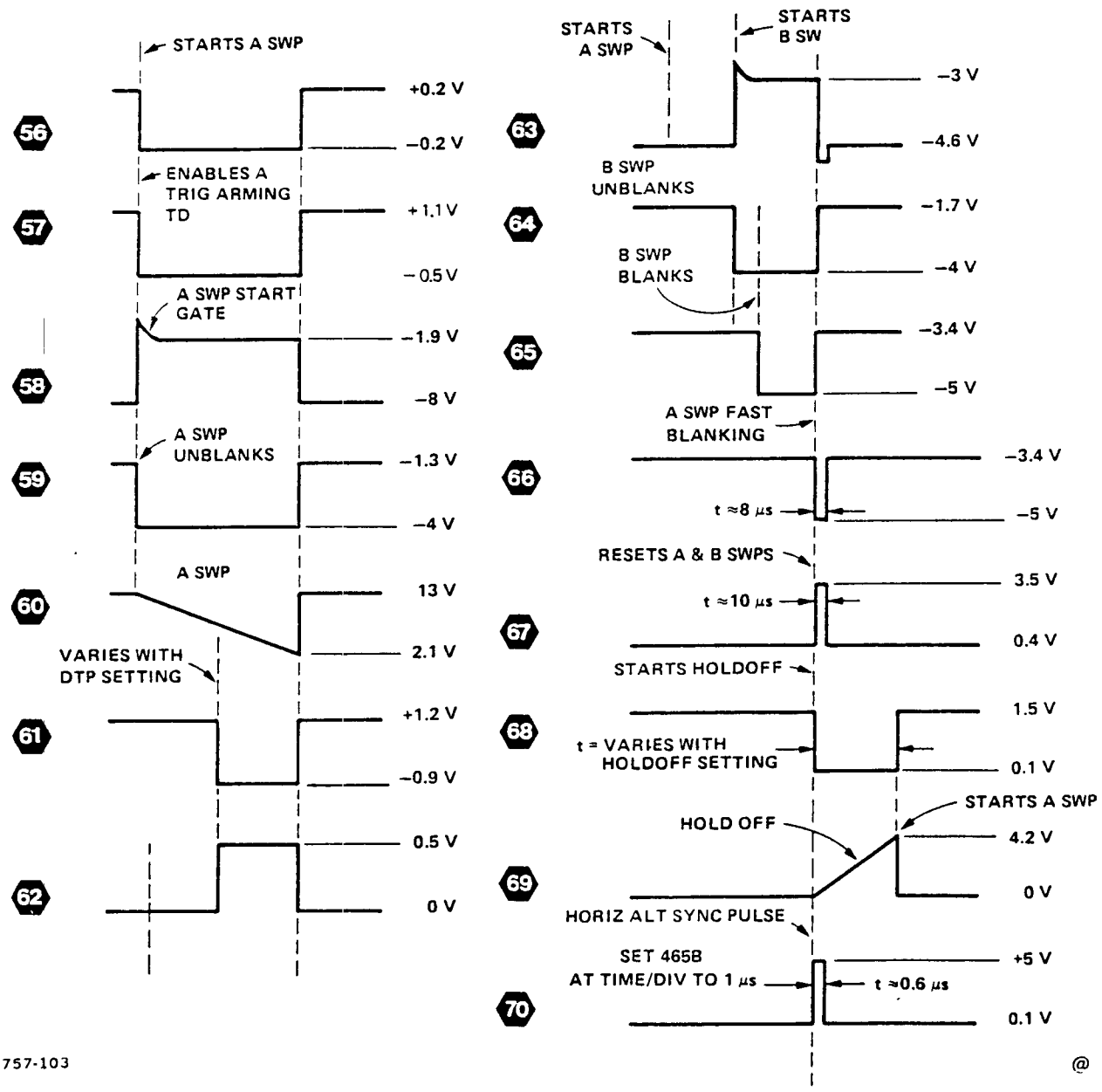




2757-103

@

# VERTICAL OUTPUT AMPLIFIER
## DIAGRAM 5
## (BELOW SN B030000)

**A2 ASSY**

| CIRCUIT NUMBER | SCHEM LOCATION | BOARD LOCATION | CIRCUIT NUMBER | SCHEM LOCATION | BOARD LOCATION | CIRCUIT NUMBER | SCHEM LOCATION | BOARD LOCATION |
|---|---|---|---|---|---|---|---|---|
| C2016 | 2E | 1B | R2063 | 4I | 1E | R2336 | 5G | 2D |
| C2112 | 6C | 1B | R2073 | 4K | 1F | R2352 | 5G | 2D |
| C2133 | 6C | 1C | R2073 | 4K | 1F | R2361 | 5I | 2E |
| C2174 | 6C | 1F | R2105 | 2E | 1B | R2363 | 5J | 2E |
| C2293 | 5C | 2H | R2106 | 2E | 1B | R2367 | 5M | 2E |
| C2308 | 4D | 3B | R2107 | 2E | 1B | R2385 | 5M | 2G |
| C2338 | 3G | 3D | R2113 | 6C | 1B | R2413 | 4C | 3B |
| C2350 | 4H | 2D | R2115 | 3F | 1B | R2414 | 4C | 3B |
| C2412 | 4C | 3B | R2134 | 3G | 1C | | | |
| C2415 | 4C | 3B | R2136 | 6F | 1C | R2422 | 4B | 3C |
| C2421 | 4C | 3C | R2138 | 3G | 1D | R2425 | 4C | 3C |
| C2428 | 5G | 3C | R2144 | 7G | 1D | R2445 | 3G | 3D |
| C2428 | 5G | 3C | R2146 | 7E | 1D | R2451 | 3F | 3D |
| C2436 | 4G | 3D | R2151 | 7G | 1D | R2461 | 5K | 3E |
| C2438 | 4F | 3D | R2153 | 4I | 1D | R2463 | 5G | 3E |
| C2439 | 3G | 3D | R2155 | 4I | 1D | R2467 | 5J | 3E |
| C2481 | 6C | 3G | R2164 | 3K | 1E | R2468 | 4K | 3E |
| C2483 | 6C | 3G | R2165 | 3K | 1E | R2475 | 4K | 3F |
| | | | R2166 | 3I | 1E | R2520 | 4C | 3B |
| L2393 | 5C | 2H | R2168 | 4M | 2E | R2530 | 5G | 3C |
| L2419 | 5C | 3C | R2172 | 6C | 1F | R2535 | 4G | 3C |
| L2485 | 6C | 3G | R2173 | 3J | 1F | R2540 | 5G | 3D |
| L2487 | 6C | 3G | R2202 | 5D | 2A | R2550 | 4G | 3D |
| LR2268 | 3M | 2E | R2206 | 3D | 2A | | | |
| LR2366 | 5M | 2E | R2231 | 5G | 2C | RT2304 | 4D | 2A |
| | | | R2232 | 6G | 2C | | | |
| P2495 | 4B | 3H | R2242 | 3G | 2D | U2210 | 2D | 2B |
| | | | R2245 | 4H | 2D | U2260 | 2J | 2E |
| Q2130 | 7G | 1C | R2247 | 4H | 2D | U2480 | 4K | 3F |
| Q2140 | 7F | 1D | R2267 | 3M | 2E | | | |
| | | | R2285 | 3M | 2G | VR2211 | 3F | 2B |
| R2005 | 2E | 1B | R2306 | 4D | 2B | VR2212 | 6E | 2B |
| R2005 | 2F | 1B | R2308 | 3D | 2B | VR2215 | 5F | 2B |
| R2025 | 7E | 1C | R2311 | 5F | 2B | | | |
| R2029 | 6F | 1C | R2312 | 4D | 2B | W2472 | 4K | 3F |
| R2030 | 6G | 1C | R2331 | 5G | 2C | | | |
| R2035 | 6F | 1C | R2333 | 5G | 2C | | | |

**P/O A4 ASSY**

| CIRCUIT NUMBER | SCHEM LOCATION | BOARD LOCATION | CIRCUIT NUMBER | SCHEM LOCATION | BOARD LOCATION | CIRCUIT NUMBER | SCHEM LOCATION | BOARD LOCATION |
|---|---|---|---|---|---|---|---|---|
| P4058 | 5A | 2G | S4075 | 5A | 2J | | | |

*P/O A4 ASSY also shown on diagrams 3, 4, 7, 8, 9, 10, 11, 12, and 13*

# 465B CONTROL SETTINGS

## DC Voltages

| | |
|---|---|
| A TRIG MODE | NORM (sweep not running) |
| TRIGGER SOURCE (both) | EXT |
| TRIGGER LEVEL (both) | Midrange |
| TRIGGER SLOPE (both) | + |
| TRIGGER COUPLING (both) | AC |
| VERT MODE | A TRIG VIEW and CHOP |
| AC-GND-DC (both) | GND |

## AC Waveforms

| | |
|---|---|
| TIME/DIV | 0.2 ms |
| TRIGGER SOURCE (both) | EXT |
| TRIGGER LEVEL (both) | Midrange |
| TRIGGER SLOPE (both) | + |
| TRIGGER COUPLING (both) | AC |
| VERT MODE | A TRIG VIEW and CHOP |
| HORIZ DISPLAY | A INTEN |
| DELAY TIME POSITION | Fully counterclockwise |
| Trigger Input (both) | 0.5 V, 1 kHz square wave |

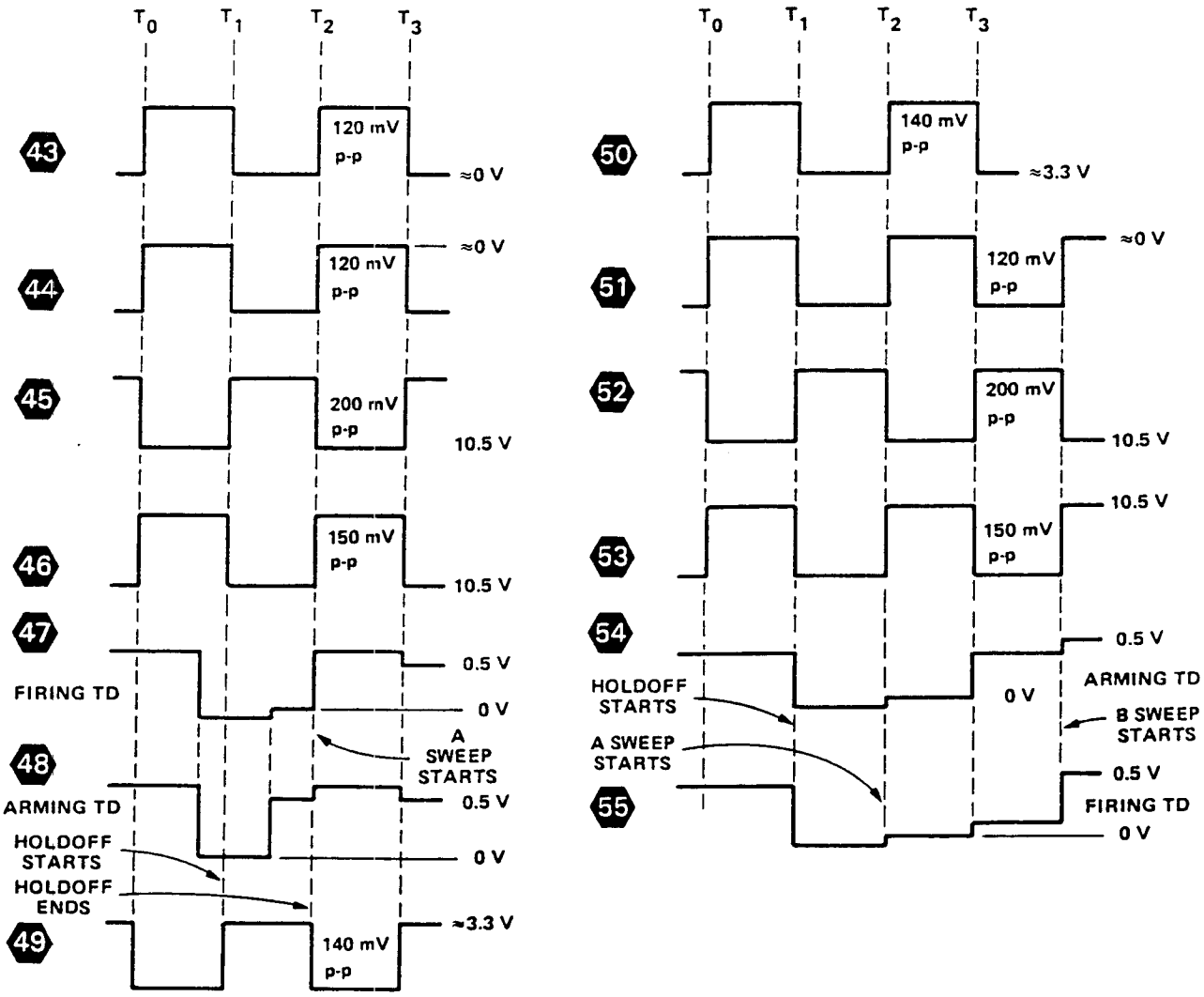


2757-102

## VERTICAL OUTPUT AMPLIFIER

## DIAGRAM 5

## (SN B030000 & UP)

### A2 ASSY

| CIRCUIT NUMBER | SCHEM LOCATION | BOARD LOCATION | CIRCUIT NUMBER | SCHEM LOCATION | BOARD LOCATION | CIRCUIT NUMBER | SCHEM LOCATION | BOARD LOCATION |
|---|---|---|---|---|---|---|---|---|
| C2038 | 3C | 1D | R2054 | 6E | 1E | R2318 | 2D | 3C |
| C2047 | 4G | 1D | R2055 | 6E | 1E | R2323 | 2E | 2C |
| C2126 | 3H | 1C | R2057 | 6E | 1E | R2325 | 3E | 2C |
| C2172 | 3H | 1F | R2058 | 5F | 1E | R2326 | 3D | 3C |
| C2196 | 2H | 2H | R2073 | 6F | 1F | R2328 | 2D | 3C |
| C2315 | 2E | 2C | R2074 | 2H | 1F | R2335 | 7C | 3D |
| C2334 | 5C | 3D | R2075 | 6F | 1F | R2337 | 7C | 3D |
| C2335 | 7C | 3D | R2103 | 3C | 1B | R2344 | 5C | 3D |
| C2336 | 6C | 3D | R2104 | 3B | 1B | R2354 | 6C | 2E |
| C2337 | 6C | 2D | R2108 | 3C | 1B | R2356 | 6E | 2E |
| C2339 | 6B | 3D | R2117 | 3A | 1B | R2357 | 6F | 2E |
| C2346 | 6D | 2E | R2119 | 3C | 2B | R2358 | 6F | 3E |
| C2417 | 4B | 3C | R2123 | 4G | 1C | R2426 | 2D | 3C |
| C2422 | 3D | 3C | R2124 | 4G | 1C | R2432 | 6C | 3C |
| C2424 | 3D | 3C | R2125 | 4F | 1C | R2436 | 6C | 3D |
| C2486 | 3H | 3G | R2127 | 3H | 1C | R2446 | 6C | 3D |
| C2488 | 2G | 3G | R2135 | 5B | 1C | R2447 | 6B | 3E |
| | | | R2137 | 7B | 1D | R2448 | 6B | 3E |
| L2296 | 2G | 2H | R2142 | 5C | 1D | R2455 | 6B | 3E |
| L2492 | 2G | 3H | R2143 | 5C | 1D | R2465 | 6F | 3F |
| L2494 | 3G | 3H | R2154 | 5F | 1E | R2466 | 6F | 3F |
| | | | R2156 | 5E | 2E | R2472 | 6G | 3F |
| LR2264 | 5H | 2F | R2168 | 5H | 2F | R2476 | 4C | 3F |
| LR2267 | 6H | 2F | R2185 | 5H | 2G | | | |
| | | | R2207 | 3B | 2B | RT2333 | 3E | 2C |
| P2495 | 4B | | R2208 | 3C | 2B | | | |
| P2498 | 3B | 3H | R2212 | 2C | 2B | U2005 | 3B | 1B |
| | | | R2214 | 3D | 2B | U2225 | 4F | 2C |
| Q2105 | 3C | 2B | R2218 | 2C | 2B | U2255 | 5G | 2E |
| Q2115 | 4B | 1B | R2243 | 6D | 2D | U2385 | 6F | 3G |
| Q2306 | 2B | 2B | R2244 | 5C | 2D | | | |
| Q2308 | 3C | 2B | R2246 | 7C | 2D | VR2232 | 5C | 2D |
| | | | R2247 | 6D | 2E | VR2234 | 4D | 2D |
| R2014 | 2B | 1B | R2262 | 5H | 2F | VR2238 | 7C | 2D |
| R2015 | 2B | 1B | R2268 | 7H | 2F | | | |
| R2016 | 2A | 1B | R2284 | 7H | 2G | | | |
| R2017 | 3A | 1B | R2304 | 2B | 2B | | | |
| R2025 | 5F | 1C | R2305 | 2C | 2B | | | |
| R2045 | 3C | 1D | | | | | | |

### P/O A4 ASSY

| CIRCUIT NUMBER | SCHEM LOCATION | BOARD LOCATION | CIRCUIT NUMBER | SCHEM LOCATION | BOARD LOCATION | CIRCUIT NUMBER | SCHEM LOCATION | BOARD LOCATION |
|---|---|---|---|---|---|---|---|---|
| P4058 | 2G | 2G | S4075 | 2J | 2F | | | |

*P/O A4 ASSY also shown on diagrams 3, 4, 7, 8, 9, 10, 11, 12, and 13*

# 465B CONTROL SETTINGS

## DC Voltages

| | |
|---|---|
| VERT MODE | CH 1 |
| Vertical POSITION | Midrange |
| AC-GND-DC (both) | GND |

## AC Waveforms

| | |
|---|---|
| VERT MODE | CH 1 |
| VOLTS/DIV | 5 mV |
| CH 1 AC-GND-DC | DC |
| Input | 20 mV positive-going square wave |

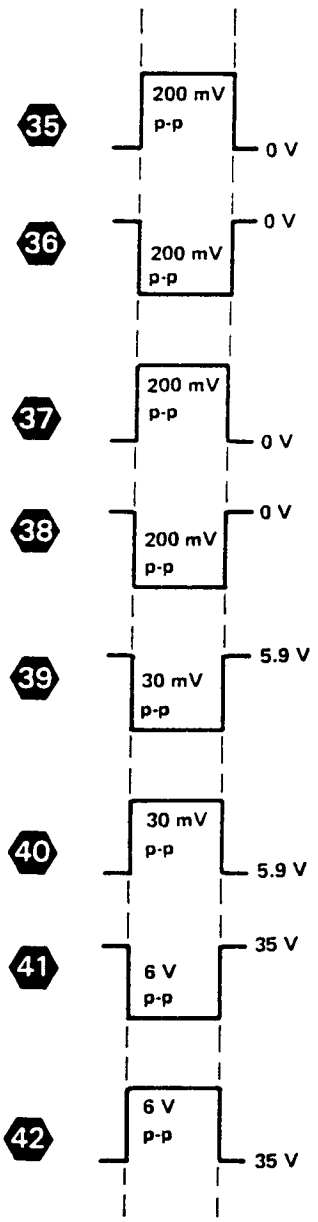


2757-101

# 465B CONTROL SETTINGS

## DC Voltages

| | |
|---|---|
| VERT MODE | CH 1 |
| Vertical POSITION | Midrange |
| AC-GND-DC (both) | GND |

## AC Waveforms

| | |
|---|---|
| VERT MODE | CH 1 |
| VOLTS/DIV | 5 mV |
| CH 1 AC-GND-DC | DC |
| Input | 20 mV positive-going square wave |

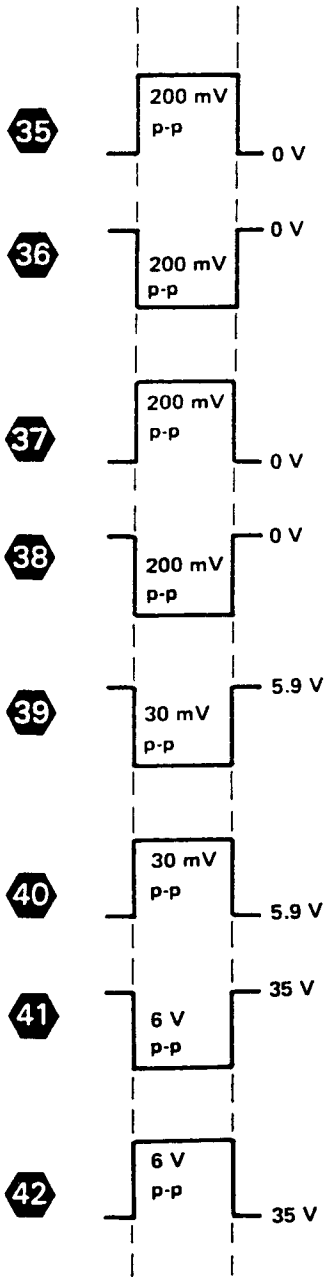


2757-101

# VERTICAL SWITCHING LOGIC

## DIAGRAM 3

**P/O A1 ASSY**

| CIRCUIT NUMBER | SCHEM LOCATION | BOARD LOCATION |
|---|---|---|
| C1119 | 1L | 2C |
| C1306 | 2L | 3B |
| C1342 | 1D | 2E |
| C1405 | 2L | 3B |
| C1422 | 1K | 3C |
| C1462 | 7A | 3F |
| C1464 | 7A | 3G |
| C1466 | 6A | 3G |
| C1502 | 4L | 3B |
| C1517 | 2D | 4B |
| C1521 | 3K | 3C |
| C1525 | 7B | 4C |
| C1611 | 6H | 4C |
| C1615 | 5H | 4C |
| C1623 | 6J | 4C |
| C1643 | 4D | 4E |
| C1714 | 5H | 5C |
| C1723 | 5J | 4C |
| C1726 | 5J | 5C |
| C1734 | 7B | 5D |
| C1804 | 8F | 5A |
| C1813 | 8H | 5B |
| C1822 | 5H | 5C |
| C1832 | 2K | 5D |
| C1911 | 8C | 6B |
| C1912 | 7I | 6B |
| CR1312 | 1K | 3B |
| CR1327 | 2D | 2C |
| CR1432 | 2F | 3D |
| CR1434 | 3F | 3D |
| CR1436 | 3G | 3D |
| CR1438 | 2G | 3D |
| CR1441 | 1G | 3E |
| CR1443 | 1F | 3E |
| CR1445 | 1G | 3E |
| CR1447 | 1F | 3E |
| CR1529 | 6K | 4C |
| CR1541 | 4G | 4D |
| CR1543 | 4F | 4E |
| CR1545 | 3G | 4E |
| CR1547 | 3G | 4E |
| CR1547 | 3F | 4E |
| CR1727 | 6K | 5C |
| CR1818 | 6K | 5C |
| CR1918 | 8I | 6C |
| J1101 | 1M | 2B |
| J1224 | 1B | 2C |
| J1224 | 1B | 2C |
| J1320 | 3C | 2C |
| J1802 | 6M | 5A |
| J1802 | 6M | 5A |
| J1901 | 8B | 6A |
| J1902 | 8M | 6A |
| L1245 | 1D | 2E |
| L1412 | 1M | 3B |
| L1512 | 3L | 3B |
| L1642 | 3D | 4E |
| P1505 | 2B | 4B |
| P1505 | 4A | 4B |
| P1505 | 4M | 4B |
| P1505 | 8A | 4B |
| P1565 | 6A | 3G |
| P1920 | 5M | 6C |
| P1920 | 8M | 6C |
| Q1118 | 1K | 2B |
| Q1215 | 1K | 2B |
| Q1225 | 3E | 2C |
| Q1235 | 2E | 2D |
| Q1344 | 1E | 2E |
| Q1346 | 1E | 3E |
| Q1426 | 2K | 3C |
| Q1428 | 3K | 3C |
| Q1617 | 6I | 4C |
| Q1619 | 5I | 4C |
| Q1636 | 4I | 4D |
| Q1644 | 4E | 4E |
| Q1646 | 3E | 4E |
| Q1719 | 5I | 5C |
| Q1812 | 8I | 5B |
| R1107 | 1L | 2B |
| R1108 | 1K | 2B |
| R1202 | 1K | 2A |
| R1205 | 1K | 2B |
| R1206 | 1K | 2B |
| R1207 | 1K | 2B |
| R1208 | 1K | 2B |
| R1216 | 1L | 2C |
| R1232 | 1D | 2D |
| R1233 | 2E | 2D |
| R1311 | 1K | 2B |
| R1314 | 1L | 3B |
| R1326 | 3D | 2C |
| R1328 | 1J | 3C |
| R1333 | 2E | 2D |
| R1334 | 2D | 2D |
| R1335 | 1D | 2D |
| R1422 | 1K | 3C |
| R1438 | 2F | 3D |
| R1439 | 3F | 3D |
| R1448 | 1E | 3E |
| R1449 | 1E | 3E |
| R1504 | 4M | 3B |
| R1514 | 3L | 3B |
| R1516 | 3K | 4B |
| R1521 | 3K | 3C |
| R1522 | 3J | 3C |
| R1532 | 2J | 4D |
| R1534 | 3J | 4D |
| R1536 | 2K | 4D |
| R1538 | 2K | 4D |
| R1548 | 3E | 4E |
| R1549 | 4E | 4E |
| R1612 | 6H | 4C |
| R1613 | 6I | 4C |
| R1616 | 5H | 4C |
| R1622 | 6I | 4C |
| R1624 | 6J | 4C |
| R1625 | 5I | 4C |
| R1626 | 5J | 4C |
| R1632 | 2K | 4D |
| R1634 | 4D | 4D |
| R1712 | 5H | 4C |
| R1714 | 5H | 5C |
| R1716 | 5I | 5C |
| R1724 | 5J | 4C |
| R1725 | 5I | 5C |
| R1815 | 8I | 5C |
| R1816 | 6L | 5C |
| R1817 | 6K | 5C |
| R1818* | 8J | 5C |
| R1825 | 4I | 5C |
| R1903 | 7E | 6A |
| R1904 | 7F | 6A |
| R1906 | 8I | 6B |
| R1914 | 8J | 6C |
| R1916 | 7H | 6C |
| R1922 | 4H | 6C |
| R1924 | 4H | 6C |
| S1414 | 1M | 3B |
| TP1319 | 1K | 3C |
| TP1519 | 3K | 4C |
| U1605 | 6C | 4B |
| U1705 | 4G | 5B |
| U1805A | 7F | 5B |
| U1805B | 7D | 5B |
| U1805C | 7F | 5B |
| U1805D | 4H | 5B |
| U1905A | 8D | 6B |
| U1905B | 8E | 6B |
| U1905C | 8G | 6B |
| U1905D | 8D | 6B |
| VR1824 | 4H | 5C |
| W1527 | 7A | 4C |
| W1732 | 7A | 4D |

*P/O A1 ASSY also shown on diagram(s) 1, and 2*

***See Parts List for serial number ranges.**

TABLE (cont)

# CH 2 VERTICAL PREAMP

## DIAGRAM 2

### P/O A1 ASSY

| CIRCUIT NUMBER | SCHEM LOCATION | BOARD LOCATION | CIRCUIT NUMBER | SCHEM LOCATION | BOARD LOCATION | CIRCUIT NUMBER | SCHEM LOCATION | BOARD LOCATION |
|---|---|---|---|---|---|---|---|---|
| C1586 | 5A | 3I | Q1948 | 6H | 6E | R1842 | 5H | 5D |
| C1587 | 5A | 3I | Q1954 | 6G | 5F | R1843 | 5H | 5E |
| C1592 | 5A | 4I | R1558 | 5I | 4F | R1849 | 4G | 5E |
| C1597 | 3A | 4J | R1562 | 5I | 3F | R1854 | 6G | 5F |
| C1647 | 3G | 4E | R1579 | 5A | 3H | R1858 | 6E | 5F |
| C1682 | 5B | 4H | R1580 | 5A | 3H | R1868 | 6F | 5G |
| C1683 | 5A | 4H | R1582 | 5B | 3H | R1876 | 6E | 5G |
| C1690 | 5B | 4I | R1586 | 5A | 3I | R1881 | 6D | 5H |
| C1787 | 3C | 5H | R1587 | 5A | 3H | R1882 | 5E | 5H |
| C1827 | 7I | 5C | R1589 | 5B | 4I | R1884 | 6A | 5H |
| C1837 | 7G | 5D | R1590 | 5A | 3I | R1885 | 7C | 5I |
| C1846 | 4H | 5E | R1645 | 4J | 4E | R1886 | 7B | 5I |
| C1848 | 5H | 5E | R1647 | 4G | 4E | R1889 | 6B | 5I |
| C1854 | 6G | 5F | R1661 | 4E | 4F | R1891 | 6B | 5I |
| C1885 | 7C | 5I | R1683 | 5B | 4H | R1893 | 6A | 5I |
| C1886 | 7B | 5I | R1684 | 4D | 4H | R1932 | 7H | 5D |
| C1894 | 4A | 5J | R1685 | 5B | 4I | R1934 | 7H | 6D |
| C1896 | 4A | 5J | R1687 | 3C | 4H | R1944 | 6H | 6E |
| C1943 | 6H | 6E | R1695 | 4A | 4J | R1946 | 5H | 5E |
| CR1693 | 4B | 4I | R1735 | 5J | 4D | R1952 | 5G | 6E |
| CR1763 | 4F | 5F | R1742 | 6J | 5E | R1956 | 6H | 6F |
| CR1764 | 6F | 5F | R1744 | 4H | 5E | R1958 | 6G | 6F |
| CR1796 | 3A | 5J | R1752 | 5G | 5E | R1975 | 6A | 6G |
| CR1936 | 7H | 5D | R1753 | 5G | 5E | R1981 | 7B | 6H |
| | | | R1754 | 5F | 5F | R1983 | 7C | 6H |
| J1926 | 7J | 6C | R1756 | 4F | 5F | R1986 | 7B | 5I |
| | | | R1758 | 6F | 5F | R1987 | 7B | 6I |
| Q1555 | 5I | 3F | R1774 | 4E | 5G | R1988 | 7B | 6I |
| Q1556 | 4F | 4F | R1775 | 5D | 5G | R1989 | 7A | 6I |
| Q1675 | 4D | 4G | R1776 | 5D | 5H | | | |
| Q1698A | 4A | 4J | R1782 | 7A | 5H | RT1767 | 4F | 5G |
| Q1698B | 4A | 4J | R1794 | 4A | 5I | | | |
| Q1746 | 4G | 5E | R1798 | 4A | 5J | S1995 | 6A | 6J |
| Q1833 | 8I | 5D | R1828 | 7I | 5D | | | |
| Q1845 | 4H | 5E | R1834 | 8H | 5D | U1790 | 3B | 5I |
| Q1855 | 6F | 5F | R1835 | 8H | 5D | | | |
| Q1875 | 6D | 5G | R1838 | 7H | 5D | VR1597 | 3A | 4J |
| Q1938 | 6H | 6D | R1839 | 4H | 5D | VR1662 | 5E | 4F |

*P/O A1 ASSY also shown on diagram(s) 1, and 3*

### P/O. A3 ASSY

| CIRCUIT NUMBER | SCHEM LOCATION | BOARD LOCATION | CIRCUIT NUMBER | SCHEM LOCATION | BOARD LOCATION | CIRCUIT NUMBER | SCHEM LOCATION | BOARD LOCATION |
|---|---|---|---|---|---|---|---|---|
| C30 | 2C | 1B | C37 | 2I | 2D | R3036 | 2H | 1D |
| C31 | 2C | 2B | | | | R3039 | 2I | 2E |
| C32 | 2E | 1C | R3014 | 1B | 1A | | | |
| C33 | 2E | 2C | R3015 | 2B | 1A | W3031 | 2D | 1C |
| C34 | 2G | 1C | R3030 | 2C | 1C | W3034 | 2F | 1C |
| C35 | 2G | 2C | R3032 | 2E | 1C | W3035 | 2G | 1D |
| C36 | 2H | 1D | R3033 | 2E | 1C | | | |

*P/O A3 ASSY also shown on diagram 1*

### CHASSIS MOUNTED PARTS

| CIRCUIT NUMBER | SCHEM LOCATION | BOARD LOCATION | CIRCUIT NUMBER | SCHEM LOCATION | BOARD LOCATION | CIRCUIT NUMBER | SCHEM LOCATION | BOARD LOCATION |
|---|---|---|---|---|---|---|---|---|
| C3042 | 2J | CHASSIS | J13010 | 2A | CHASSIS | R3045 | 2K | CHASSIS |
| C13010 | 2A | CHASSIS | | | | | | |
| C13012 | 2A | CHASSIS | R3042 | 2J | CHASSIS | | - | |

## VERTICAL SWITCHING LOGIC
## DIAGRAM 3

**P/O A4 ASSY**

| CIRCUIT NUMBER | SCHEM LOCATION | BOARD LOCATION | CIRCUIT NUMBER | SCHEM LOCATION | BOARD LOCATION | CIRCUIT NUMBER | SCHEM LOCATION | BOARD LOCATION |
|---|---|---|---|---|---|---|---|---|
| P4061 | 6A | 2H | | | | | | |

*P/O A4 ASSY also shown on diagram(s) 4, 5, 7, 8, 9, 10, 11, 12, and 13*

**P/O A5 ASSY**

| CIRCUIT NUMBER | SCHEM LOCATION | BOARD LOCATION | CIRCUIT NUMBER | SCHEM LOCATION | BOARD LOCATION | CIRCUIT NUMBER | SCHEM LOCATION | BOARD LOCATION |
|---|---|---|---|---|---|---|---|---|
| C5018 | 2B | 1B | P5001<br>P5005 | 2B<br>2A | 1A<br>1B | S5210 | 3B | 3A |

*P/O A5 ASSY also shown on diagram 4*

**P/O A7 ASSY**

| CIRCUIT NUMBER | SCHEM LOCATION | BOARD LOCATION | CIRCUIT NUMBER | SCHEM LOCATION | BOARD LOCATION | CIRCUIT NUMBER | SCHEM LOCATION | BOARD LOCATION |
|---|---|---|---|---|---|---|---|---|
| C7108 | 2A | 2B | P7052 | 3A | 1G | S7312B | 1A | 3C |

*P/O A7 ASSY also shown on diagram(s) 6, 7, and 12*

**CHASSIS MOUNTED PARTS**

| CIRCUIT NUMBER | SCHEM LOCATION | BOARD LOCATION | CIRCUIT NUMBER | SCHEM LOCATION | BOARD LOCATION | CIRCUIT NUMBER | SCHEM LOCATION | BOARD LOCATION |
|---|---|---|---|---|---|---|---|---|
| DL11405 | 1M | CHASSIS | | | | | | |

# SWEEP AND Z-AXIS LOGIC DIAGRAM 7

**P/O A4 ASSY**

| CIRCUIT NUMBER | SCHEM LOCATION | BOARD LOCATION | CIRCUIT NUMBER | SCHEM LOCATION | BOARD LOCATION | CIRCUIT NUMBER | SCHEM LOCATION | BOARD LOCATION |
|---|---|---|---|---|---|---|---|---|
| C4398 | 4B | 7L | P4398 | 3A | 7M | W4544 | 9N | 9G |
| | | | P4561 | 5A | 9H | | | |
| J4463 | 1A | 9H | P4571 | 7N | 10I | | | |
| J4487 | 6B | 9K | | | | | | |

*P/O A4 ASSY also shown on diagrams 3, 4, 5, 8, 9, 10, 11, 12, and 13*

**P/O A6 ASSY**

| CIRCUIT NUMBER | SCHEM LOCATION | BOARD LOCATION | CIRCUIT NUMBER | SCHEM LOCATION | BOARD LOCATION | CIRCUIT NUMBER | SCHEM LOCATION | BOARD LOCATION |
|---|---|---|---|---|---|---|---|---|
| CR6218 | 7B | 5D | P6010 | 8B | 1D | R6019 | 8A | 2D |
| CR6219 | 7B | 5D | P6010 | 9A | 1D | R6217 | 7B | 5D |
| | | | P6015 | 8B | 1D | | | |
| P4487 | 6B | 5D | P6015 | 9A | 1D | S6205 | 6A | 4B |
| P4487 | 6M | 5D | | | | S6260 | 1A | 4H |
| P6002 | 8A | 1B | R6012 | 9A | 1C | | | |

*P/O A6 ASSY also shown on diagrams 8, 9, and 10*

**P/O A7 ASSY**

| CIRCUIT NUMBER | SCHEM LOCATION | BOARD LOCATION | CIRCUIT NUMBER | SCHEM LOCATION | BOARD LOCATION | CIRCUIT NUMBER | SCHEM LOCATION | BOARD LOCATION |
|---|---|---|---|---|---|---|---|---|
| C7052 | 9C | 1G | CR7098 | 1G | 1L | Q7076 | 9E | 1I |
| C7127 | 5J | 2D | CR7099 | 1F | 1L | Q7083 | 2F | 1J |
| C7158 | 8J | 2H | CR7149 | 9K | 2G | Q7092 | 1F | 1K |
| C7165 | 8J | 2H | CR7154 | 1E | 1G | Q7093 | 2D | 1K |
| C7174 | 3H | 2I | CR7184 | 4F | 2J | Q7095 | 2D | 1K |
| C7182 | 3F | 2J | CR7272 | 6I | 3I | Q7155 | 8J | 2G |
| C7187 | 2D | 2K | CR7277 | 6L | 3I | Q7174 | 3H | 2I |
| C7188 | 8M | 2K | CR7281 | 3F | 2J | Q7181 | 4E | 1J |
| C7192 | 3D | 2K | CR7362 | 7I | 4H | Q7182 | 4F | 2J |
| C7196 | 7M | 2K | CR7381 | 2C | 3J | Q7195 | 3D | 1L |
| C7197 | 8M | 2K | CR7382 | 2E | 3J | Q7254 | 4H | 3G |
| C7247 | 7M | 3G | CR7383 | 2C | 3J | Q7256 | 4H | 3G |
| C7263 | 7I | 2H | CR7385 | 1D | 3J | Q7460 | 7J | 4H |
| C7265 | 6I | 2H | CR7386 | 2E | 4J | Q7465 | 7L | 4H |
| C7273 | 6I | 3I | CR7387 | 3F | 4J | | | |
| C7286 | 8L | 2K | CR7449 | 4I | 4G | R7049 | 1D | 1G |
| C7288 | 8M | 2K | CR7451 | 8K | 4G | R7052 | 1E | 1G |
| C7297 | 8M | 2L | CR7463 | 5C | 4H | R7056 | 1E | 1G |
| C7303 | 5J | 3A | CR7464 | 6C | 4H | R7057 | 1E | 1G |
| C7371 | 5I | 3I | | | | R7062 | 8E | 1H |
| C7376 | 6K | 3I | J4541 | 1C | 5I | R7063 | 8C | 1H |
| C7377 | 5H | 3J | J4571 | 4C | 5F | R7064 | 7C | 1H |
| C7447 | 5H | 4F | J7076 | 3L | 1I | R7065 | 8E | 1H |
| C7447 | 5I | 4F | J7077 | 2L | 1I | R7066 | 8C | 1H |
| C7449 | 5I | 4G | J7078 | 1L | 1J | R7068 | 8D | 1H |
| C7453* | 5I | 4G | | | | R7069 | 7D | 1H |
| C7458 | 7K | 5H | L7278 | 5H | 3J | R7070 | 8D | 1H |
| C7461 | 7J | 4H | | | | R7077 | 1G | 1J |
| C7471 | 7H | 4I | P7052 | 8C | 1G | R7078 | 2I | 1J |
| C7507 | 9M | 5B | | | | R7079 | 4E | 1J |
| | | | Q7053 | 1E | 1G | R7084 | 2F | 1K |
| CR7072 | 9D | 1I | Q7055 | 1E | 1G | R7085 | 1F | 1K |
| CR7073 | 9E | 1I | Q7067A | 8E | 1H | R7086 | 3F | 1K |
| CR7078 | 2F | 1J | Q7067B | 8C | 1H | R7087 | 2E | 1K |
| CR7084 | 2G | 1K | Q7074 | 8D | 1I | R7088 | 2D | 1K |
| CR7085 | 2G | 1K | Q7075 | 8D | 1I | | | |
| CR7097 | 1G | 1L | | | | | | |

TABLE (cont)

*See Parts List for serial number ranges.

## 465B CONTROL SETTINGS

### DC Voltages

| | |
|---|---|
| A TRIG MODE | NORM (sweep not running) |
| AC-GND-DC (both) | GND |

### AC Waveforms

| | |
|---|---|
| A TRIG MODE | AUTO (no trigger signal) |
| B TRIGGER SOURCE | STARTS AFTER DELAY |
| HORIZ DISPLAY | A INTEN |
| DELAY TIME POSITION | 5.00 |
| A TIME/DIV | 1 ms |
| B TIME/DIV | 0.1 ms |
| AC-GND-DC (both) | GND |

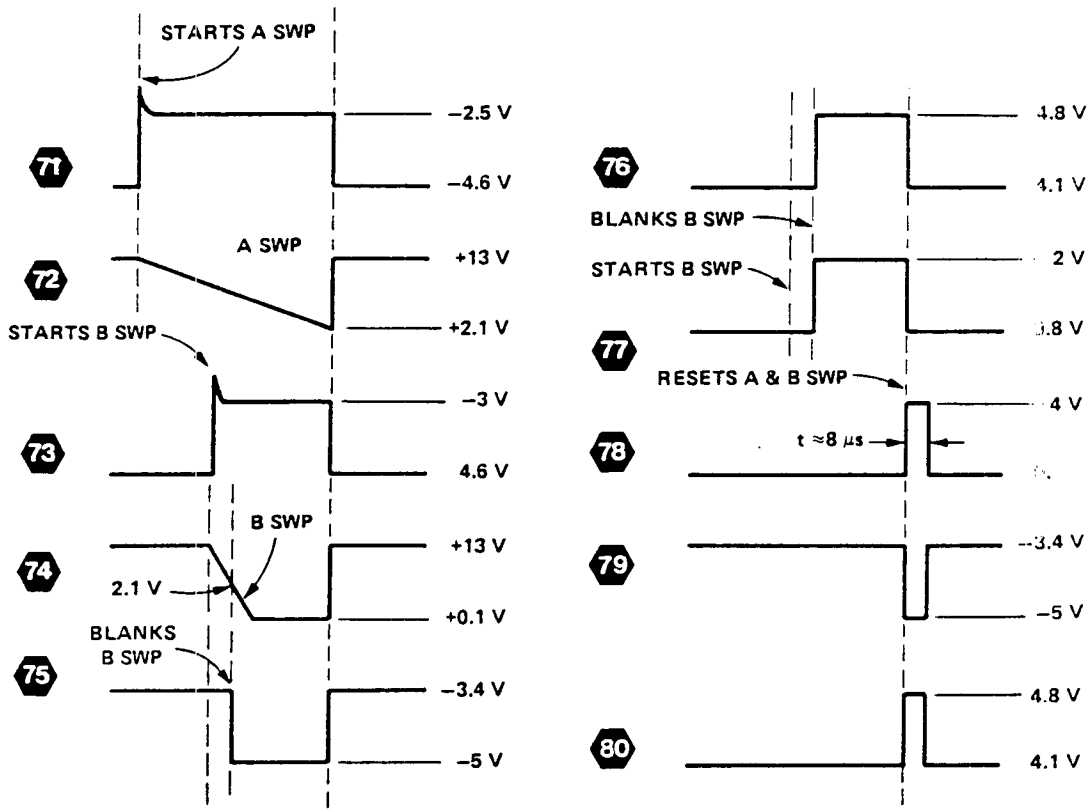


2757-42

Static Sensitive Devices
*See Maintenance Section*

COMPONENT NUMBER EXAMPLE

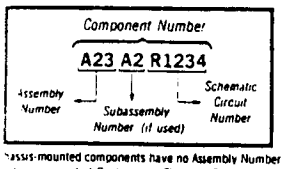


Chassis-mounted components have no Assembly Number prefix—see end of Replaceable Electrical Parts List

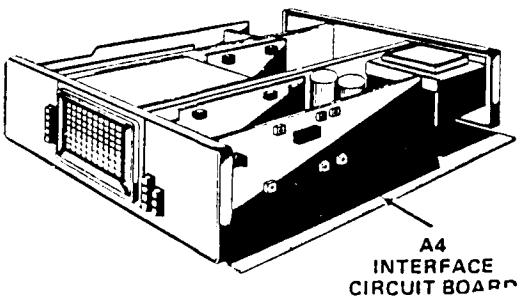

# HORIZONTAL DISPLAY LOGIC AND A & B SWEEP GENERATORS

## DIAGRAM 8

**P/O A4 ASSY**

| CIRCUIT NUMBER | SCHEM LOCATION | BOARD LOCATION |
|---|---|---|
| C4391 | 4D | 7L |
| C4441 | 4B | 8G |
| C4442 | 1C | 8G |
| C4442 | 1C | 8G |
| C4472 | 2F | 7I |
| C4473 | 5L | 8I |
| C4476 | 7K | 7J |
| C4477 | 7J | 8J |
| C4487 | 5J | 8K |
| C4497 | 8G | 8M |
| C4554 | 1E | 10H |
| C4563 | 1B | 9H |
| C4567 | 3D | 9I |
| C4568 | 2G | 9I |
| C4569 | 1E | 10I |
| C4571 | 1A | 9I |
| C4572 | 9C | 9J |
| C4575 | 6C | 9J |
| C4585 | 6E | 10K |
| C4592 | 7B | 9L |
| C4593 | 9A | 10L |
| C4594 | 1A | 10L |
| C4597 | 8D | 9M |
| C4598 | 8G | 9M |
| CR4396 | 3G | 7L |
| CR4465 | 4L | 8I |
| CR4466 | 4L | 8I |
| CR4467 | 5L | 8I |
| CR4471 | 5L | 8I |
| CR4472 | 5L | 8I |
| CR4546 | 1C | 9G |
| CR4551 | 1B | 9G |
| CR4552 | 1B | 9G |
| CR4563 | 3D | 9H |
| CR4567 | 2G | 9I |
| CR4577 | 6C | 9J |
| CR4581 | 6B | 9K |
| CR4582 | 6B | 9K |
| CR4592 | 9D | 9L |
| CR4597 | 8G | 9M |
| J4387 | 2J | 6L |
| J4388 | 3G | 7L |
| J4463 | 2D | 9H |
| J4463 | 2E | 9H |
| J4463 | 2E | 9H |
| J4463 | 4G | 9H |
| J4463 | 4M | 9H |
| J4463 | 5M | 9H |
| J4475 | 5M | 8J |
| J4487 | 3G | 9K |
| J4487 | 6E | 9K |
| J4487 | 7E | 9K |
| J4487 | 8D | 9K |
| J4541 | 1N | 10F |
| P4541 | 1M | 10F |
| P4541 | 3A | 10F |
| P4541 | 5L | 10F |
| P4561 | 1M | 9H |
| P4571 | 6M | 10I |
| P4571 | 9A | 10J |
| Q4398* | 3I | 6M |
| Q4465 | 2L | 8H |
| Q4475 | 7K | 8J |
| Q4481 | 5K | 8K |
| Q4482 | 5K | 8K |
| Q4491 | 6K | 7L |
| Q4492 | 5K | 7L |
| Q4497 | 9D | 9L |
| Q4498 | 8F | 9L |
| Q4545 | 1B | 9F |
| Q4554 | 1D | 10G |
| Q4562 | 1E | 10H |
| Q4563 | 1B | 10H |
| Q4564 | 1C | 10H |
| Q4565 | 3D | 9I |
| Q4566 | 2E | 9I |
| Q4570 | 3G | 10I |
| Q4581 | 6D | 10K |
| Q4582 | 6E | 10K |
| Q4588 | 7B | 10L |
| Q4588A | 7A | 10L |
| Q4588B | 7C | 10L |
| Q4598 | 8G | 10M |
| R4392 | 5G | 7L |
| R4393* | 3I | 6L |
| R4394 | 3I | 6L |
| R4395 | 2H | 6L |
| R4396 | 3G | 7L |
| R4397 | 4H | 7L |
| R4451 | 1B | 8G |
| R4461 | 1K | 8H |
| R4462 | 1I | 8H |
| R4466 | 4M | 8I |
| R4467 | 5L | 8I |
| R4469 | 2E | 8I |
| R4471 | 5M | 8I |
| R4472 | 4L | 8I |
| R4473 | 5M | 8J |
| R4474 | 7K | 8J |
| R4475 | 7J | 8J |
| R4476 | 7J | 8J |
| R4477 | 2F | 9I |
| R4479 | 7K | 8K |
| R4482 | 4G | 7K |
| R4483 | 5G | 7K |
| R4484 | 5G | 8K |
| R4485 | 4I | 8K |
| R4486 | 4I | 8K |
| R4487 | 5I | 8K |
| R4488 | 5H | 8K |
| R4491 | 6J | 7L |
| R4492 | 6J | 8L |
| R4493 | 5J | 8L |
| R4494 | 5J | 8L |
| R4495 | 5I | 8L |
| R4496 | 6I | 8L |
| R4497 | 8F | 8L |
| R4498 | 8F | 9M |
| R4545 | 1B | 9G |
| R4546 | 1E | 9G |
| R4547 | 1C | 10G |
| R4548 | 1D | 10G |
| R4551 | 1G | 9G |
| R4552 | 1B | 9G |
| R4553 | 1D | 10G |
| R4554 | 1D | 10G |
| R4561 | 1C | 9H |
| R4562 | 3E | 9H |
| R4563 | 3C | 9H |
| R4563 | 3C | 9H |
| R4563 | 3C | 9H |
| R4564 | 1B | 9H |
| R4565 | 2E | 9I |
| R4566 | 3E | 9I |
| R4568 | 1G | 10I |
| R4570 | 1A | 9I |
| R4571 | 2F | 9I |
| R4571 | 2F | 9I |
| R4572 | 3E | 9J |
| R4573 | 1A | 9J |
| R4574 | 1A | 9J |
| R4575 | 6B | 9J |
| R4576 | 6B | 9J |
| R4577 | 6C | 9J |
| R4578 | 6E | 9J |
| R4579 | 6D | 10K |
| R4581 | 7G | 9K |
| R4583 | 6B | 9K |
| R4584 | 6D | 9K |
| R4585 | 6D | 10K |
| R4586 | 9E | 9L |
| R4587 | 9C | 9L |
| R4592 | 6C | 9L |
| R4593 | 7B | 9L |
| R4595 | 9F | 9M |
| R4596 | 8F | 9M |
| R4597 | 9E | 9M |
| R4598 | 9A | 10M |
| R4599 | 8G | 9M |
| U4269 | 2L | 5I |
| U4391 | 5D | 6L |
| U4391B | 4G | 6L |
| U4391C | 6I | 6L |
| U4391D | 2H | 6L |
| U4491 | 4D | 8L |
| U4491A | 5H | 8L |
| U4491B | 6I | 8L |
| VR4394 | 3I | 6L |
| VR4495 | 5I | 8L |
| VR4496 | 6I | 8L |
| W4348 | 4B | 7G |
| W4440 | 4B | 7G |
| W4544 | 5B | 9G |

*P/O A4 ASSY also shown on diagrams 3, 4, 5, 7, 9, 10, 11, 12, and 13*

*See Parts List for serial number ranges.

**P/O A6 ASSY**

| CIRCUIT NUMBER | SCHEM LOCATION | BOARD LOCATION |
|---|---|---|
| P4463 | 4G | 5G |
| S6111A | 7D | 3C |
| S6260 | 4F | 4H |

*P/O A6 ASSY also shown on diagrams 7, 9, and 10*

# 465B CONTROL SETTINGS

## DC Voltages

| | |
|---|---|
| A TIME/DIV | X-Y |
| AC-GND-DC (both) | GND |

## AC Waveforms

| | |
|---|---|
| A TRIG MODE | AUTO (no trigger signal) |
| B TRIGGER SOURCE | STARTS AFTER DELAY |
| HORIZ DISPLAY | A INTEN |
| DELAY TIME POSITION | 5.00 |
| A TIME/DIV | 1 ms |
| B TIME/DIV | 0.1 ms |
| AC-GND-DC (both) | GND |

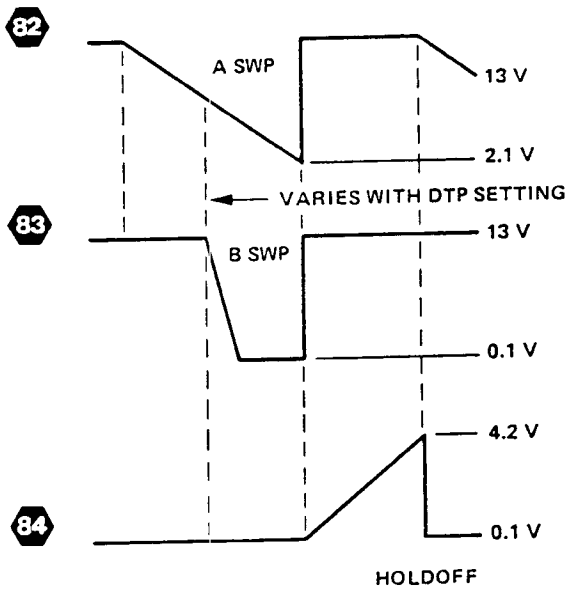


2757-105

# A & B TIMING SWITCH
## DIAGRAM 9

**P/O A4 ASSY**

| CIRCUIT NUMBER | SCHEM LOCATION | BOARD LOCATION | CIRCUIT NUMBER | SCHEM LOCATION | BOARD LOCATION | CIRCUIT NUMBER | SCHEM LOCATION | BOARD LOCATION |
|---|---|---|---|---|---|---|---|---|
| P4498 | 2G | 8M | W4468 | 1A | 8I | W4544 | 1A | 9G |
| | | | W4481 | 1A | 8K | | | |
| VR4497 | 3G | 8M | W4483 | 1A | 8K | | | |

*P/O A4 ASSY also shown on diagrams 3, 4, 5, 7, 8, 10, 11, 12, and 13*

**P/O A6 ASSY**

| CIRCUIT NUMBER | SCHEM LOCATION | BOARD LOCATION | CIRCUIT NUMBER | SCHEM LOCATION | BOARD LOCATION | CIRCUIT NUMBER | SCHEM LOCATION | BOARD LOCATION |
|---|---|---|---|---|---|---|---|---|
| C6001 | 5B | 2B | Q6034 | 1F | 1F | R6035 | 2J | 2F |
| C6002 | 3C | 1C | Q6036 | 1I | 1F | R6036 | 2I | 2F |
| C6015 | 5B | 2C | Q6215 | 6B | 5C | R6037 | 3I | 2F |
| C6016 | 5B | 2C | | | | R6038 | 3I | 2F |
| C6020 | 4B | 2D | R6001 | 5B | 2B | R6044 | 3I | 2G |
| C6033 | 2E | 1F | R6002 | 4D | 2B | R6045 | 6M | 2G |
| C6042 | 2L | 2G | R6004 | 4D | 2B | R6046 | 6M | 2G |
| C6043 | 2L | 2G | R6006 | 4D | 2C | R6047 | 6M | 2G |
| C6105 | 4B | 4C | R6008 | 5D | 2C | R6052 | 1H | 1H |
| C6110 | 4C | 4C | R6010 | 5D | 2C | R6053 | 1G | 1H |
| C6112 | 4F | 4D | R6011 | 2D | 1C | R6054 | 7M | 2H |
| C6121 | 5F | 4D | R6013 | 5E | 2C | R6056 | 2H | 2H |
| C6122 | 5F | 4D | R6014 | 6E | 2C | R6060 | 1F | 2H |
| C6135 | 2L | 4F | R6017 | 6E | 2D | R6114 | 3F | 4D |
| C6140 | 1K | 4F | R6018 | 6E | 2D | R6115 | 3F | 3H |
| C6225 | 2L | 5F | R6020 | 3C | 2D | R6123 | 2C | 4E |
| | | | R6021 | 2D | 2D | R6152 | 5M | 2H |
| CR6113 | 3F | 4D | R6022 | 2D | 2D | R6155 | 2F | 3H |
| | | | R6023 | 4I | 2E | R6212 | 7B | 5C |
| P4463 | 1B | 5G | R6024 | 4I | 2E | R6213 | 7B | 5C |
| P448 | 1B | 5D | R6025 | 3I | 2E | | | |
| P6001 | 1E | 1B | R6026 | 2J | 2E | S6111B | 7G | 3C |
| P6010 | 5M | 1D | R6027 | 1I | 2E | S6155 | 1F | 3H |
| P6025 | 3M | 1E | R6032 | 2J | 2E | | | |
| | | | R6033 | 2J | 2F | VR6057 | 1H | 2H |
| Q6032 | 2E | 1F | R6034 | 2J | 2F | VR6058 | 1H | 2H |

*P/O A6 ASSY also shown on diagrams 7, 8, and 10*

**CHASSIS MOUNTED PARTS**

| CIRCUIT NUMBER | SCHEM LOCATION | BOARD LOCATION | CIRCUIT NUMBER | SCHEM LOCATION | BOARD LOCATION | CIRCUIT NUMBER | SCHEM LOCATION | BOARD LOCATION |
|---|---|---|---|---|---|---|---|---|
| CR14498 | 3H | CHASSIS | R14498 | 2H | CHASSIS | | | |
| DS16002 | 1E | CHASSIS | S14498 | 3H | CHASSIS | | | |

# POWER SUPPLY DIAGRAM 12

## P/O A4 ASSY

| CIRCUIT NUMBER | SCHEM LOCATION | BOARD LOCATION | CIRCUIT NUMBER | SCHEM LOCATION | BOARD LOCATION | CIRCUIT NUMBER | SCHEM LOCATION | BOARD LOCATION |
|---|---|---|---|---|---|---|---|---|
| C4203 | 7H | 5A | F4508 | 3H | 9B | R4317 | 5F | 6C |
| C4203 | 7H | 5A | | | | R4318 | 2F | 7B |
| C4204 | 5F | 5A | P4086 | 7C | 2K | R4319 | 1D | 7B |
| C4303 | 2H | 7A | P4541 | 3J | 10F | R4325 | 5H | 7D |
| C4305 | 2F | 6B | | | | R4326 | 1F | 7D |
| C4306 | 1E | 7B | Q4102 | 6G | 4A | R4403 | 4H | 8A |
| C4307 | 1D | 7B | Q4105 | 6G | 4A | R4404 | 4G | 8A |
| C4326 | 6H | 7D | Q4106 | 7F | 4A | R4405 | 4G | 8A |
| C4331 | 4H | 7E | Q4190 | 8D | 3L | R4406 | 3F | 7B |
| C4407 | 3F | 7B | Q4301 | 1G | 6A | R4407 | 4E | 8B |
| C4419 | 6E | 8D | Q4302 | 1G | 6A | R4411 | 3E | 8B |
| C4429 | 1E | 8E | Q4303 | 2F | 6B | R4412 | 2I | 8B |
| C4439 | 1E | 8F | Q4311 | 6F | 6C | R4421 | 1D | 7D |
| C4521 | 3E | 9D | Q4312 | 5G | 7C | R4422 | 5H | 8D |
| C4531 | 5E | 9E | Q4401 | 4G | 7A | R4432 | 1I | 7F |
| C4532 | 2D | 9E | Q4403 | 3G | 8A | R4433 | 1I | 8F |
| C4533 | 3D | 10F | Q4404 | 4F | 8A | R4434 | 1I | 8E |
| | | | Q4425 | 1I | 8D | R4526 | 1H | 9E |
| CR4105 | 6G | 3A | Q4431 | 1I | 7F | R4527 | 3D | 9E |
| CR4302 | 1F | 6A | | | | R4531 | 3D | 10E |
| CR4303 | 1H | 7A | R4107 | 7G | 4A | | | |
| CR4304 | 1F | 6A | R4193 | 7E | 4K | TP4337 | 6I | 6F |
| CR4312 | 2F | 6B | R4195 | 8E | 4K | TP4338 | 2I | 7F |
| CR4318 | 5F | 7C | R4202 | 7H | 5A | TP4339 | 4I | 7F |
| CR4405 | 4H | 8A | R4204 | 7G | 4A | TP4340 | 1I | 6F |
| CR4406 | 1E | 7B | R4205 | 7F | 5A | TP4439 | 7I | 7F |
| CR4411 | 6D | 8B | R4206 | 2G | 5A | | | |
| CR4423 | 1I | 9D | R4206 | 5E | 5A | U4206A | 5F | 5A |
| CR4425 | 6I | 7D | R4207 | 5E | 5A | U4206B | 6F | 5A |
| CR4426 | 2I | 7D | R4208 | 2G | 6A | U4411A | 1E | 7B |
| CR4431 | 1H | 8F | R4302 | 2G | 6A | U4411D | 4F | 7B |
| CR4515 | 7H | 9C | R4303 | 2H | 7A | | | |
| CR4516 | 3D | 9C | R4305 | 2F | 6B | VR4194 | 7E | 4K |
| CR4528 | 4D | 10E | R4306 | 1E | 7B | VR4304 | 1E | 7A |
| CR4531 | 1D | 9F | R4311 | 6E | 6B | VR4326 | 1H | 7D |
| | | | R4312 | 6E | 6B | VR4408 | 2I | 8B |
| F4501 | 6D | 9A | R4315 | 6F | 6B | VR4421 | 1D | 7D |
| F4507 | 4D | 10B | R4316 | 1F | 6B | VR4422 | 1I | 8D |

*P/O A4 ASSY also shown on diagrams 3, 4, 5, 7, 8, 9, 10, 11, and 13*

## P/O A7 ASSY

| CIRCUIT NUMBER | SCHEM LOCATION | BOARD LOCATION | CIRCUIT NUMBER | SCHEM LOCATION | BOARD LOCATION | CIRCUIT NUMBER | SCHEM LOCATION | BOARD LOCATION |
|---|---|---|---|---|---|---|---|---|
| P7005 | 7B | 1B | R7108 | 7B | 2B | | | |

*P/O A7 ASSY also shown on diagrams 3, 6, and 7*

## A10 ASSY

| CIRCUIT NUMBER | SCHEM LOCATION | BOARD LOCATION | CIRCUIT NUMBER | SCHEM LOCATION | BOARD LOCATION | CIRCUIT NUMBER | SCHEM LOCATION | BOARD LOCATION |
|---|---|---|---|---|---|---|---|---|
| DS14086 | 7C | NONE | | | | | | |
| DS14087 | 8C | NONE | | | | | | |

## CHASSIS MOUNTED PARTS

| CIRCUIT NUMBER | SCHEM LOCATION | BOARD LOCATION | CIRCUIT NUMBER | SCHEM LOCATION | BOARD LOCATION | CIRCUIT NUMBER | SCHEM LOCATION | BOARD LOCATION |
|---|---|---|---|---|---|---|---|---|
| DS17105 | 6B | CHASSIS | Q1490 | 8D | CHASSIS | S14500 | 4B | CHASSIS |
| | | | Q4102 | 6G | CHASSIS | S14510 | 6A | CHASSIS |
| F14500 | 6A | CHASSIS | Q4301 | 1G | CHASSIS | S14520 | 5A | CHASSIS |
| | | | Q4312 | 5G | CHASSIS | | | |
| P4086 | 7C | CHASSIS | Q4401 | 4G | CHASSIS | T14500 | CA | CHASSIS |
| P14500 | 6A | CHASSIS | | | | | | |
| | | | R4195 | 8E | CHASSIS | | | |

## POWER SUPPLY ISOLATION PROCEDURE

The following procedure is used as an aid in localizing the area in which loading of a power supply occurs. If the power supply comes up after isolating a circuit, it is very probable the problem is in that circuit. This can sometimes, however, lead to erroneous conclusions as a supply may pass through one circuit to another circuit. For instance, the +5 volt supply enters the Timing Board through P4463-4. It then passes through the timing switch (in the X-Y position only) and J4487-9 to CR4285 in the Horizontal Amplifier circuit. From J4487-9 it also passes through P4571-4 to the sweep control IC on the Trigger Board. Watch for these types of conditions when trying to localize a loading problem.

### +55 Volt Supply

1. Unsolder service jumper W4483 from the Interface board (see Figure 8-7). This isolates the Timing board and the Holdoff potentiometer.
2. To isolate the Trigger board from the +55 volt supply, is is necessary to remove the Trigger board from the instrument. The +55 volt supply connects to the Trigger board through P44751-9.
3. Unsolder one end of R4451 and R4575 on the Interface board (see Figure 8-7). This isolates the A & B Sweep Generator circuitry.
4. Unsolder one end of R4186 and R4191 from the Interface board (see Figure 8-7). This isolates the Calibrator circuitry.
5. If the +55 volt supply is still loaded, suspect the CRT circuitry, or the Horizontal Amplifier circuitry. Refer to Diagram 10 to locate +55 volt connections to the Horizontal Amplifier circuitry and to Diagram 11 to locate +55 volt connectons to the CRT circuitry.

For Service Manuals Contact
MAURITRON TECHNICAL SERVICES
8 Cherry Tree Rd, Chinnor
Oxon OX9 4QY
Tel:- 01844-351694 Fax:- 01844-352554
Email:- enquiries@mauritron.co.uk

@

## POWER SUPPLY ISOLATION PROCEDURE

The following procedure is used as an aid in localizing the area in which loading of a power supply occurs. If the power supply comes u after isolating a circuit, it is very probable the problem is in that circuit. This can sometimes, however, lead to erroneous conclusions as a suppl may pass through one circuit to another circuit. For instance, the +5 volt supply enters the Timing Board through P4463-4. It then passe through the timing switch (in the X-Y position only) and J4487-9 to CR4285 in the Horizontal Amplifier circuit. From J4487-9 it also passe through P4571-4 to the sweep control IC on the Trigger Board. Watch for these types of conditions when trying to localize a loading problem

### +15 Volt Supply

1. Pull P4061 from the Interface board. This isolates the Vertical Preamplifier board.
2. Pull P4060 from the Interface board. This isolates the Fan Motor circuit.
3. Pull P4057 from the Interface board. This isolates the Vertical Mode board.
4. Pull P4058 from the Interface board. This isolates the Vertical Output board.
5. Pull P4398 from the Interface board. This isolates the Horizontal POSITION potentiometers.
6. Unsolder service jumper W7292 on the Trigger board (see Figure 8-6). This isolates the Trigger board.
7. Unsolder service jumper W4481 from the Timing board (see Figure 8-8). This isolates the Timing board.
8. Unsolder service jumper W4440 on the Interface board (see Figure 8-8). This isolates the A & B Sweep Generator circuitry and th Horizontal Amplifier circuitry.
9. If the +15 volt supply is still losaded, suspect the CRT circuitry (Z-Axis Amplifier). Refer to Diagram 11 to locate +15 v connection to the CRT circuitry.

### +5 Volt Supply

1. Pull P4061 from the Interface board. This isolates the Vertical Preamplifier board.
2. Pull P4057 from the Interface board. This isolates the Vertical Mode board.
3. Pull P4058 from the Interface board. This isolates the Vertical Output board.
4. Pull P4498 from the Interface board. This isolates the HOLDOFF potentiometer.
5. Unsolder service jumper W4468 from the Interface board (see Figure 8-7). This isolates the Timing board.
6. Unsolder service jumper W7291 from the Trigger board (see Figure 8-6). This isolates the Trigger board.
7. Unsolder service jumper W4348 from the Interface board (see Figure 8-7). This isolates the A & B Sweep Generator circuitry and pa of the Horizontal Amplifier circuitry.
8. Unsolder one end of R4158 and R4263 from the Interface board (see Figure 8-7). This isolates the rest of the Horizontal Amplif circuitry.
9. Unsolder L4292 from the Interface board (see Figure 8-7). This isolates the Calibrator circuitry.
10. If the +5 volt supply is still loaded, the CRT circuitry should be suspected. Refer to Diagram 11 to locate +5 volt connections to th CRT circuitry.

### −8 Volt Supply

1. Pull P4061 from the Interface board. This isolates the Vertical Preamplifier board.
2. Pull P4057 from the Interface board. This isolates the Vertical Mode board.
3. Pull P4058 from the Interface board. This isolates the Vertical Output Amplifier board.
4. Pull P4398 from the Interface board. This isolates the Horizontal POSITION and B INTENSITY potentiometers.
5. Unsolder service jumper W7293 from the Trigger board to isolate part of the Trigger board. Unsolder one end of R7503 from th Trigger board to isolate the rest of the Trigger board (see Figure 8-6).
6. Unsolder service jumper W4544 from the Interface board (see Figure 8-7). This isolates the Timing board, A & B Sweep Generat circuitry, and part of the Horizontal Amplifier circuitry. It will also completely remove the −8 volts from the Trigger board if step is not done.
7. Check C4441 for a short or leakage.
8. If the −8 volts supply is still loaded, suspect the CRT circuitry (Z-Axis Amplifier), or the Horizontal Amplifier circuitry. Refer t Diagram 10 for the −8 volt connections to the Horizontal Amplifier circuitry and to Diagram 11 for the −8 volt contections to th CRT circuitry.

## POWER SUPPLY ISOLATION PROCEDURE

The following procedure is used as an aid in localizing the area in which loading of a power supply occurs. If the power supply comes up after isolating a circuit, it is very probable the problem is in that circuit. This can sometimes, however, lead to erroneous conclusions as a supply may pass through one circuit to another circuit. For instance, the +5 volt supply enters the Timing Board through P4463-4. It then passes through the timing switch (in the X-Y position only) and J4487-9 to CR4285 in the Horizontal Amplifier circuit. From J4487-9 it also passes through P4571-4 to the sweep control IC on the Trigger Board. Watch for these types of conditions when trying to localize a loading problem.

### +110 Volt Supply

1. Unsolder one end of VR4341, R4145, and R4346 (see Figure 8-7). This isolates the Horizontal Amplifier circuit.
2. Unsolder one end of CR4328 and R4332 (see Figure 8-7). If loading still exist, check adjustment of R4069 (Geometry) and R4178 (ASTIG). If either does not adjust and an internal short is suspected, it will be necessary to remove R4069 and R4178 to isolate the CRT circuitry (Z-Axis Amplifier).

@

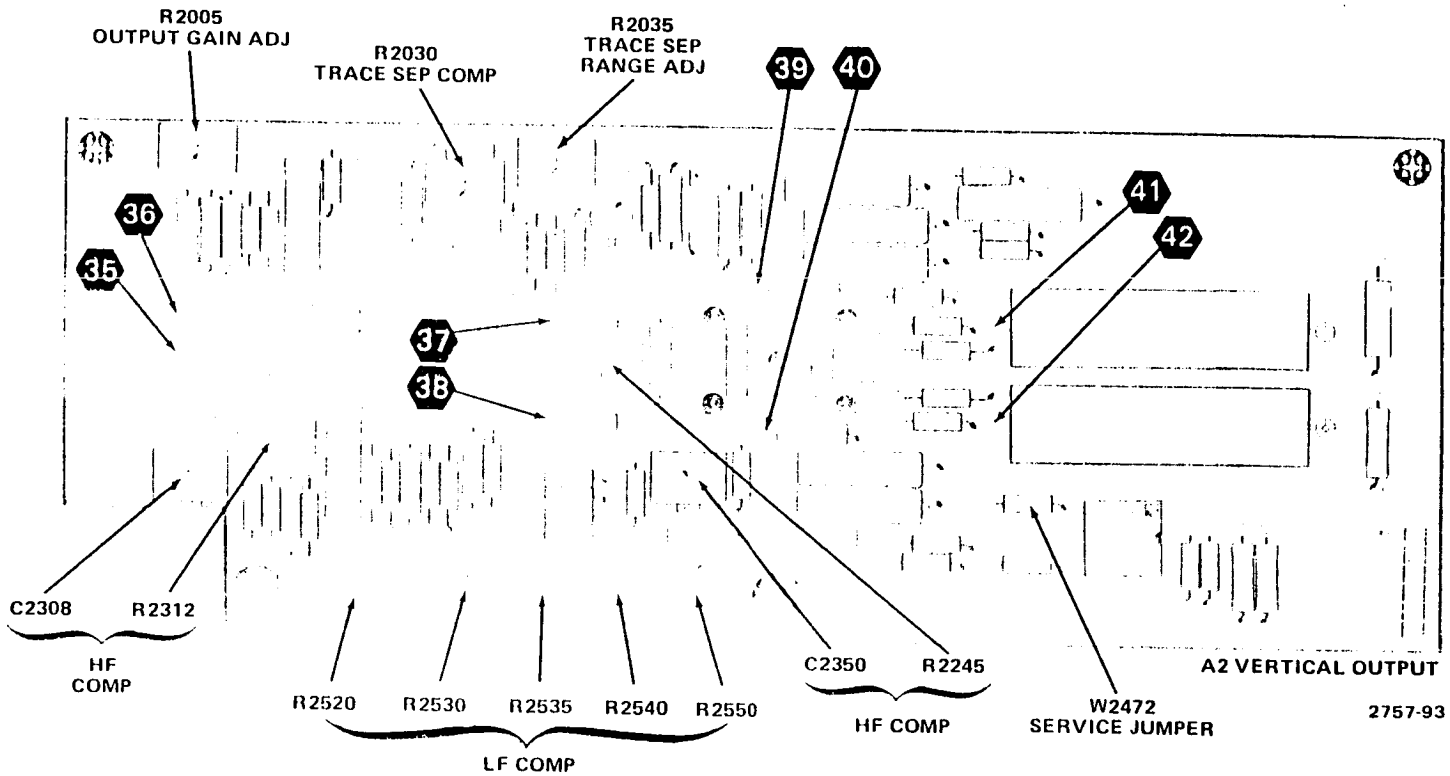


Figure 8-12. Vertical Output Amplifier circuit board adjustment locations.

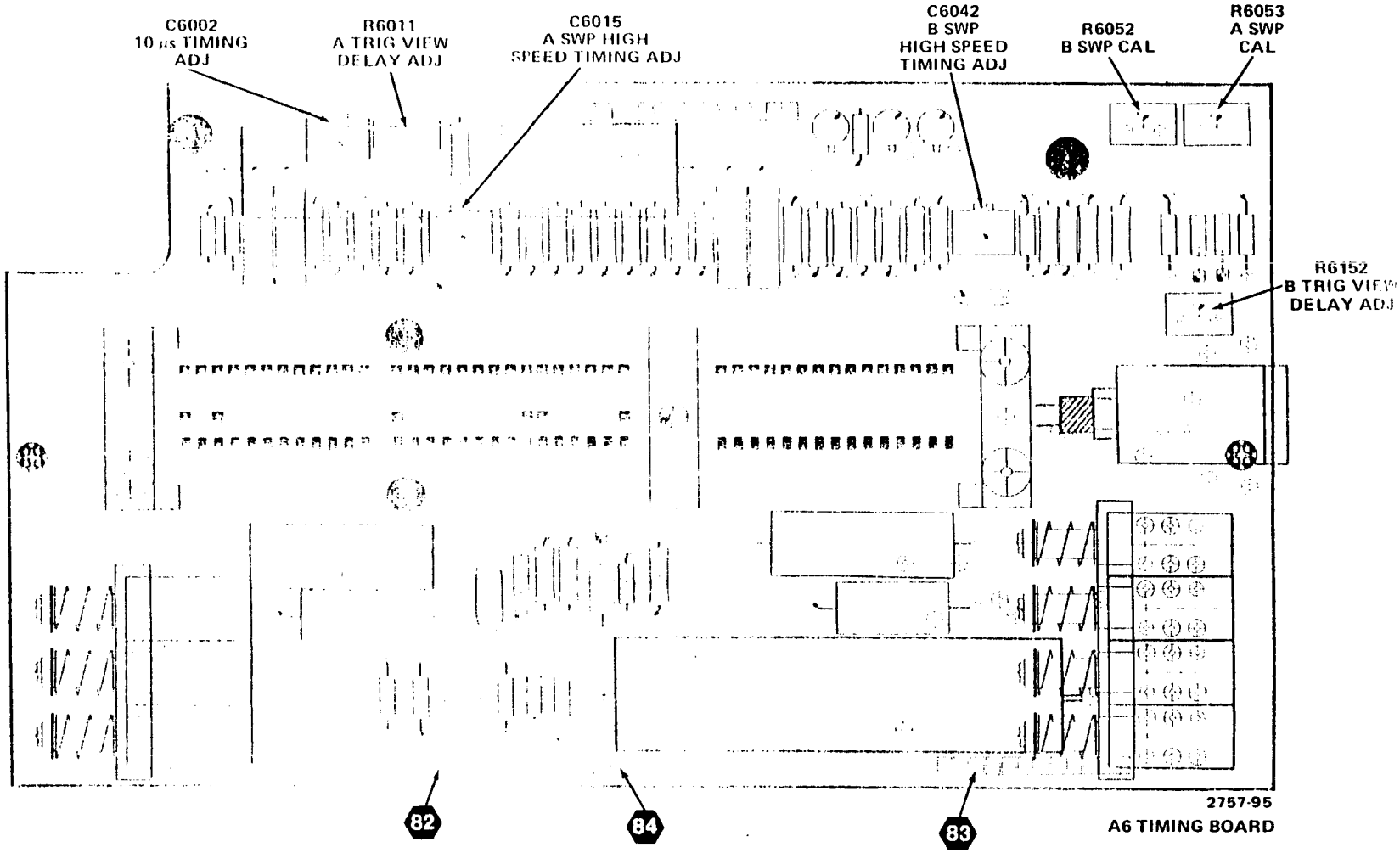


Figure 8-14. Timing circuit board adjustment locations.

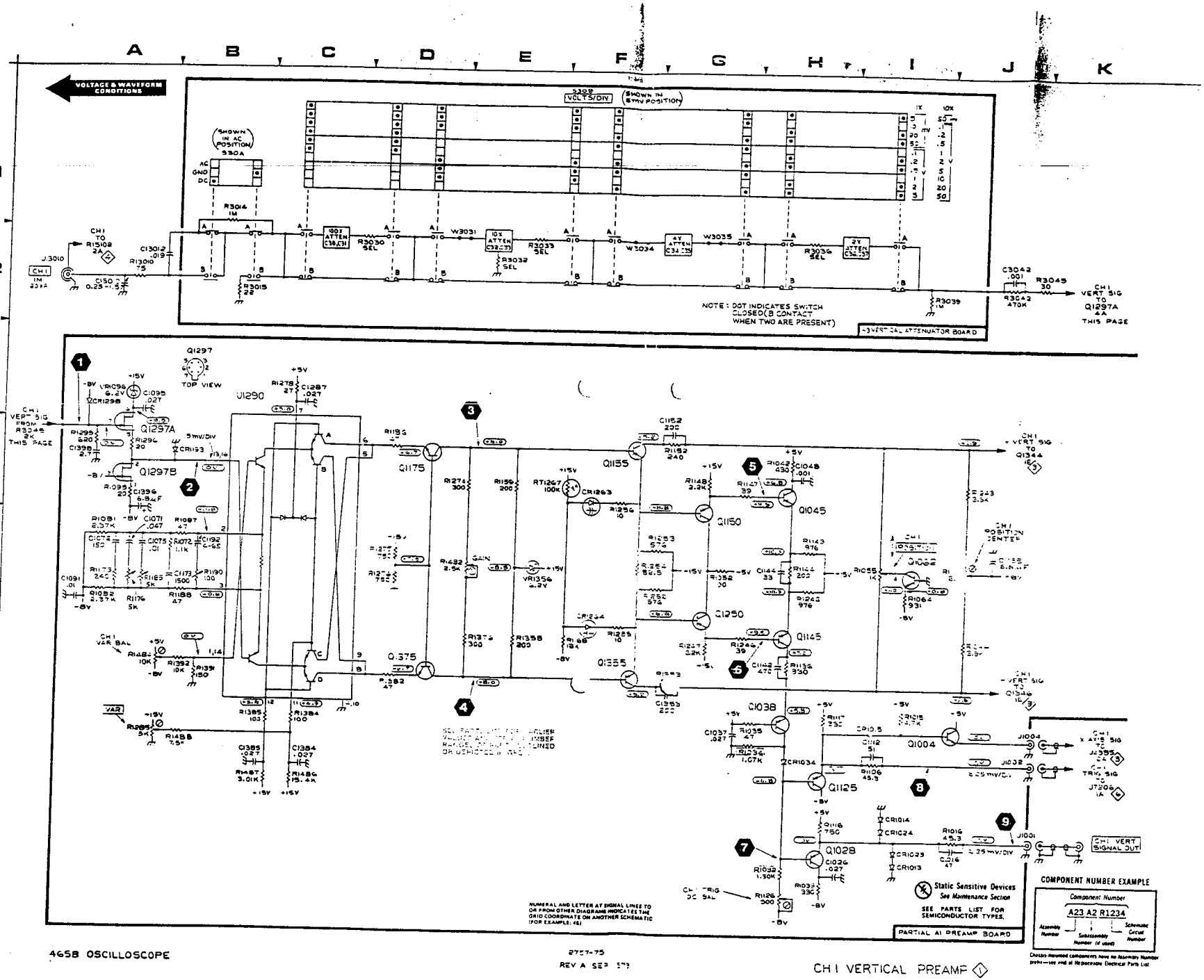


465B OSCILLOSCOPE

2757-75
REV A SEP 57?

CH I VERTICAL PREAMP

CH I VERTICAL PREAMP

7

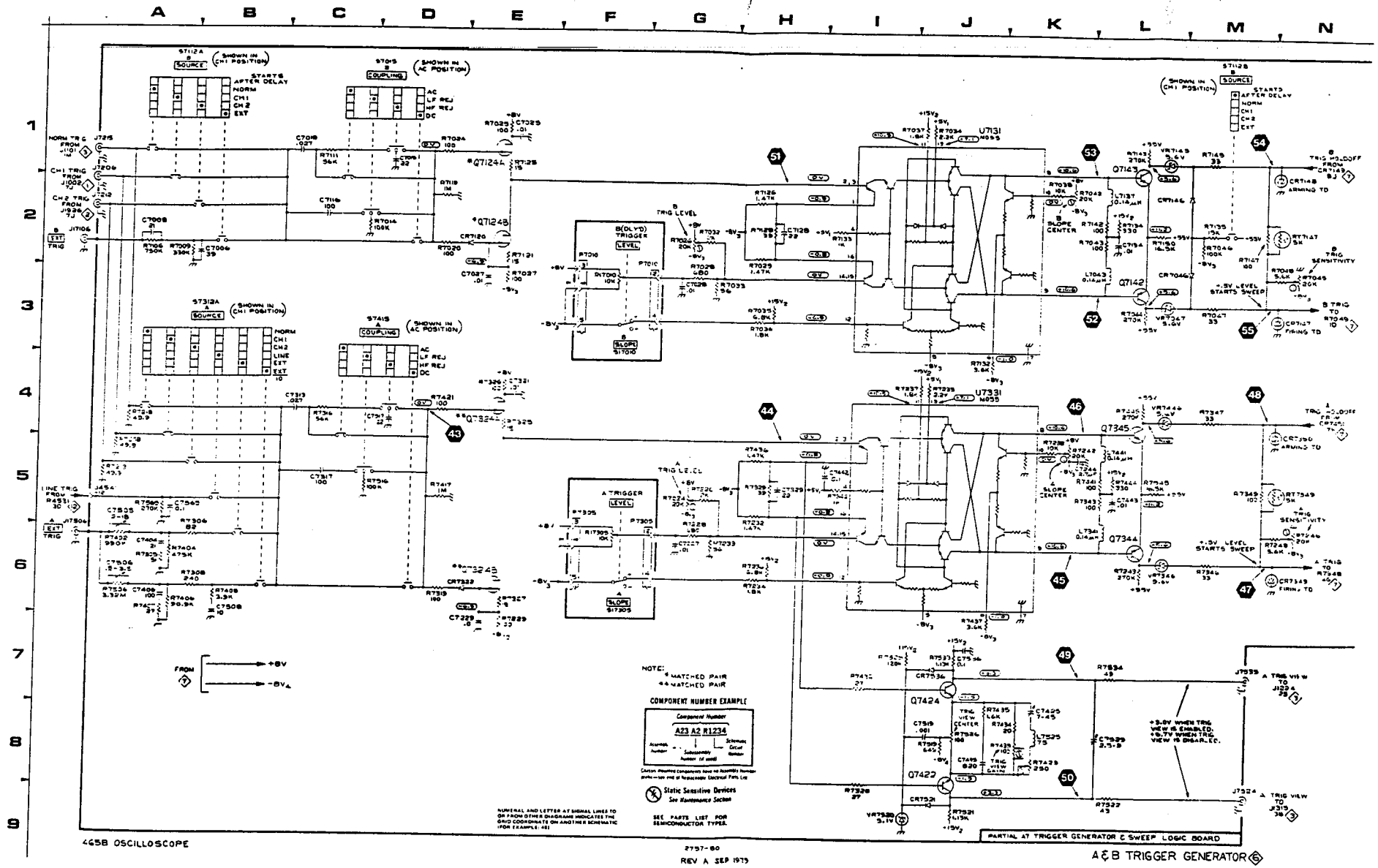
A B C D E F G H I J K L M N
1 2 3 4 5 6 7 8 9
S7112A B SOURCE (SHOWN IN CH1 POSITION)
STARTS AFTER DELAY
NORM
CH1
CH2
EXT
S7015 B COUPLING (SHOWN IN AC POSITION)
AC
LF REJ
HF REJ
DC
S7312A A SOURCE (SHOWN IN CH1 POSITION)
NORM
CH1
CH2
LINE
EXT
EXT 10
S7415 A COUPLING (SHOWN IN AC POSITION)
NORM TRIG FROM J1101 14
CH1 TRIG FROM J1002 72
CH2 TRIG FROM J1034 7J
B EXT TRIG J1106
LINE TRIG FROM R4531 30
A EXT TRIG J1504
B(DLYD) TRIGGER LEVEL
B SLOPE S1700
A TRIGGER LEVEL
A SLOPE S1705
B TRIG LEVEL
A TRIG LEVEL
U7131 N055
U7331 N055
Q7143
Q7142
Q7345
Q7344
Q7424
Q7422
B SLOPE CENTER
A SLOPE CENTER
TRIG VIEW CENTER
TRIG VIEW GAIN
B TRIG HOLDOFF FROM CR7143 8J
CR7148 ARMING TO
B TRIG SENSITIVITY
+.5V LEVEL STARTS SWEEP
B TRIG TO R7049 10
CR7147 FIRING TO
A TRIG HOLDOFF FROM CR7349 7J
CR7350 ARMING TO
A TRIG SENSITIVITY
A TRIG TO R7348 4J
CR7349 FIRING TO
A TRIG VIEW TO J1324 7J
A TRIG VIEW TO J1319 3J
+5.0V WHEN TRIG VIEW IS ENABLED. +0.7V WHEN TRIG VIEW IS DISABLED.
FROM +8V -8V
NOTE: * MATCHED PAIR ** MATCHED PAIR
COMPONENT NUMBER EXAMPLE
Component Number
A23 A2 R1234
Assembly Number
Subassembly Number (if used)
Schematic Circuit Number
Static Sensitive Devices See Maintenance Section
NUMERAL AND LETTER AT SIGNAL LINES TO OR FROM OTHER DIAGRAMS INDICATES THE GRID COORDINATE ON ANOTHER SCHEMATIC (FOR EXAMPLE: 4B)
SEE PARTS LIST FOR SEMICONDUCTOR TYPES.
PARTIAL A7 TRIGGER GENERATOR & SWEEP LOGIC BOARD
4G5B OSCILLOSCOPE
2757-80
REV A SEP 1979
A & B TRIGGER GENERATOR 6

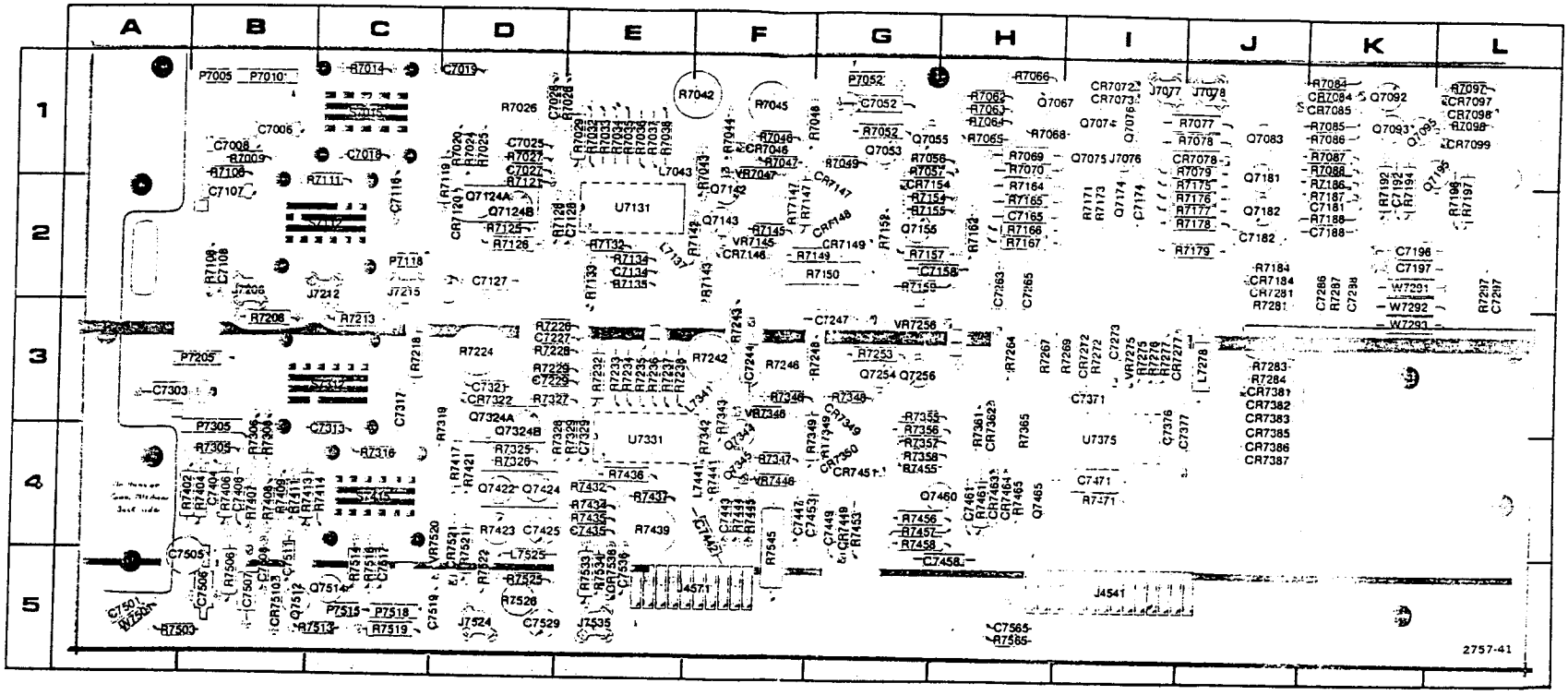


Figure 8-6. A7 Trigger Generator and Sweep Logic circuit board.

Static Sensitive Devices
*See Maintenance Section*

COMPONENT NUMBER EXAMPLE

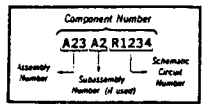


Chassis-mounted components have no Assembly Number prefix—see end of Replaceable Electrical Parts List.

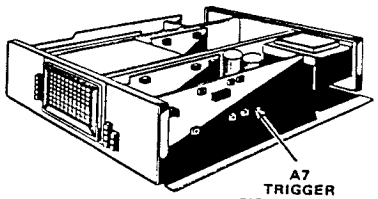

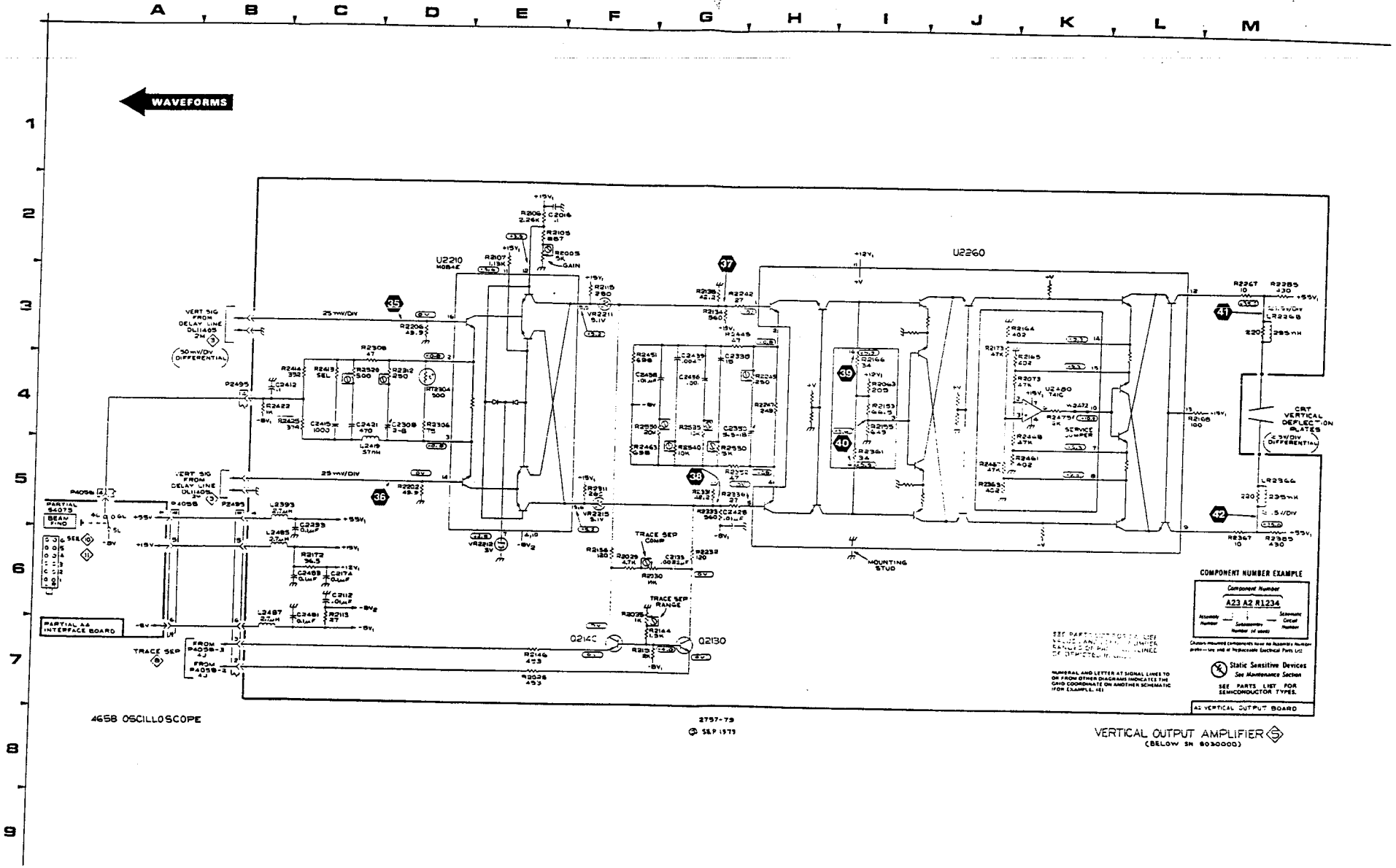


4658 OSCILLOSCOPE

2757-79

© S&P 1979

VERTICAL OUTPUT AMPLIFIER
(BELOW SN B030000)

VERT OUTPUT AMPL
(BELOW SN B030000)

5

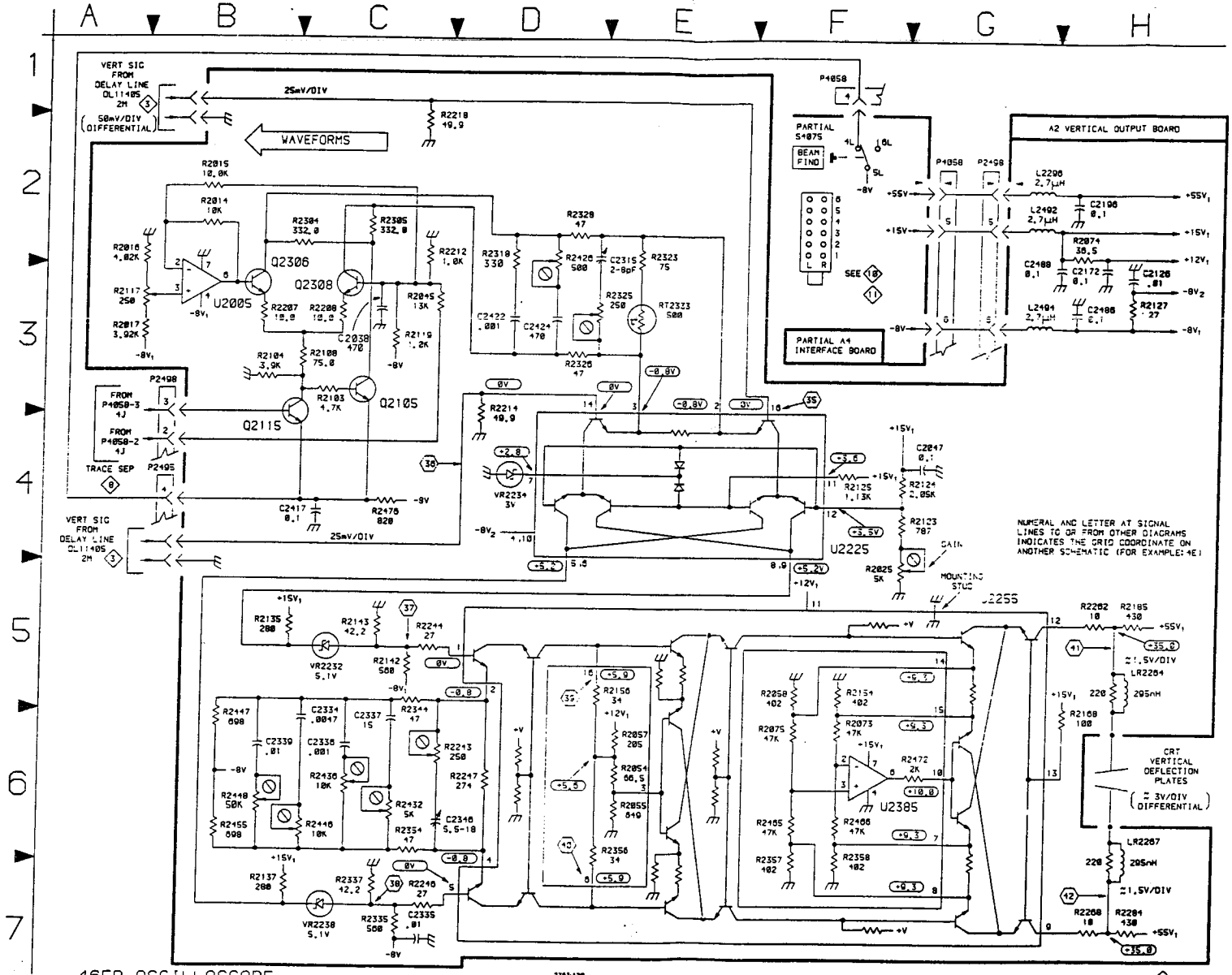


4658 OSCILLOSCOPE

2787-130 REV A SEP 1978

SN B030000 -UP VERTICAL OUTPUT AMPLIFIER 5

VERT OUTPUT AMPL (SN B030000 & UP)

5

A2 BOARD COMPONENT LOCATIONS
(BELOW SN B030000)

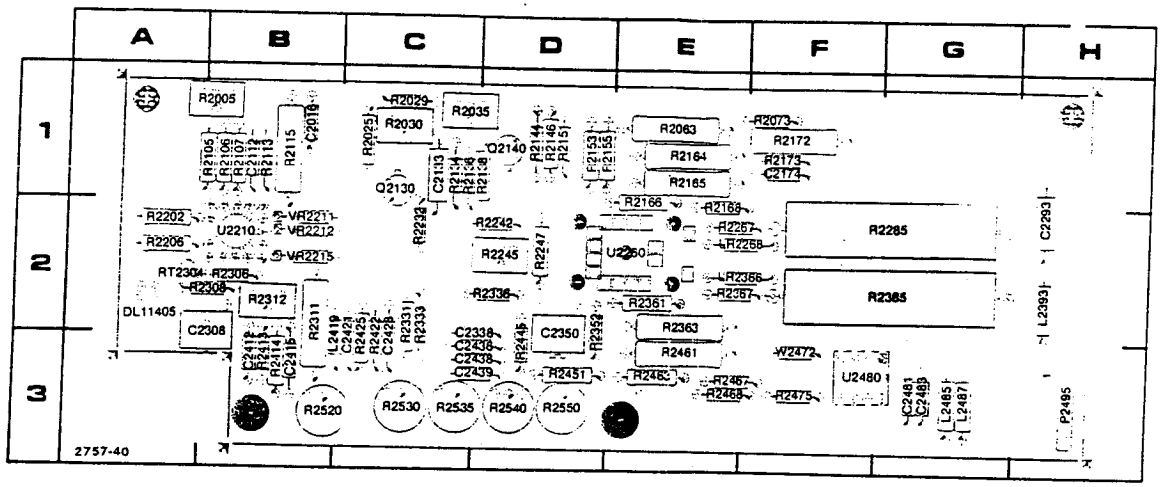


Figure 8-5B. A2 Vertical Output circuit board (below SN B030000).

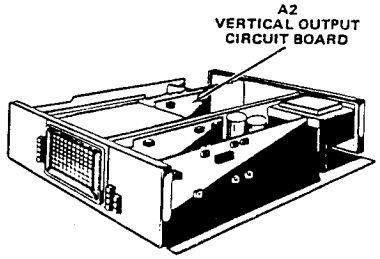


Static Sensitive Devices
*See Maintenance Section*

COMPONENT NUMBER EXAMPLE

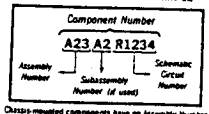


Chassis-mounted components have no Assembly Number prefix—see end of Replaceable Electrical Parts List.

## VERTICAL MODE SWITCH

## DIAGRAM 4

| P/O A4 ASSY | | | | | |
|---|---|---|---|---|---|
| CIRCUIT NUMBER | SCHEM LOCATION | BOARD LOCATION | CIRCUIT NUMBER | SCHEM LOCATION | BOARD LOCATION |
| P4057 | 6A | 2G | | | |
| *P/O A4 ASSY also shown on diagram(s) 3, 5, 7, 8, 9, 10, 11, 12, and 13* | | | | | |

| P/O A5 ASSY | | | | | |
|---|---|---|---|---|---|
| CIRCUIT NUMBER | SCHEM LOCATION | BOARD LOCATION | CIRCUIT NUMBER | SCHEM LOCATION | BOARD LOCATION |
| C5018 | 4D | 1B | R5015 | 2D | 2B |
| C5135 | 3C | 2D | R5018 | 7E | 1C |
| C5145 | 6C | 2E | R5041 | 2D | 1E |
| C5214 | 6D | 3C | R5042 | 1D | 1E |
| C5235 | 4C | 3D | R5051 | 1D | 1F |
| C5245 | 5C | 3E | R5052 | 2D | 1F |
| | | | R5053 | 2E | 1F |
| CR5115 | 3D | 2A | R5055 | 2C | 1F |
| CR5116 | 5D | 2A | R5111 | 3D | 2B |
| CR5118 | 6C | 3C | R5114 | 3D | 2A |
| CR5211 | 6B | 3C | R5117 | 1E | 2C |
| CR5214 | 6D | 3C | R5135 | 3B | 2D |
| P5001 | 3E | 1A | R5145 | 3B | 2E |
| P5001 | 8A | 1A | R5211 | 6C | 3C |
| P5005 | 3A | 1B | R5212 | 6C | 3C |
| P5025 | 9B | 1C | R5213 | 6B | 3C |
| P5026 | 1E | 1C | R5214 | 5D | 3C |
| P5046 | 1E | 1F | R5235 | 4B | 3D |
| P5222 | 3A | 3C | R5236 | 6D | 3E |
| P5226 | 1E | 3D | R5237 | 6D | 3E |
| P5250 | 6E | 3F | R5238 | 6E | 4E |
| P5250 | 6E | 3F | R5245 | 5B | 3E |
| | | | R5251 | 7D | 3F |
| Q5017 | 3D | 1B | R5252 | 7D | 3F |
| Q5056 | 2D | 1G | R5253 | 7D | 3F |
| Q5057 | 2C | 1G | R5254 | 7D | 3F |
| Q5241 | 6E | 3E | R5255 | 7C | 4F |
| Q5257 | 7D | 3F | S5210 | 2A | 3A |
| Q5258 | 7D | 3G | | | |
| | | | U5235A | 4C | 3E |
| R5005 | 5D | 1A | U5235B | 3C | 3E |
| R5006 | 6D | 2A | U5235B | 5C | 3E |
| R5007 | 4D | 2A | U5235C | 5C | 3E |
| *P/O A5 ASSY also shown on diagram 3* | | | | | |

| CHASSIS MOUNTED PARTS | | | | | |
|---|---|---|---|---|---|
| IRCUIT NUMBER | SCHEM LOCATION | BOARD LOCATION | CIRCUIT NUMBER | SCHEM LOCATION | BOARD LOCATION |
| C15101 | 2A | CHASSIS | DS15034 | 1F | CHASSIS |
| C15101 | 7A | CHASSIS | DS15036 | 9C | CHASSIS |
| C15103 | 2A | CHASSIS | DS15038 | 7F | CHASSIS |
| C15103 | 7A | CHASSIS | | | |
| | | | R15102 | 2A | CHASSIS |
| DS9040 | 2F | CHASSIS | R15102 | 7A | CHASSIS |
| DS9040 | 7F | CHASSIS | | | |
| DS9060 | 2G | CHASSIS | | | |
| DS9060 | 7G | CHASSIS | S1285 | 1F | CHASSIS |

REV A JUN 1979

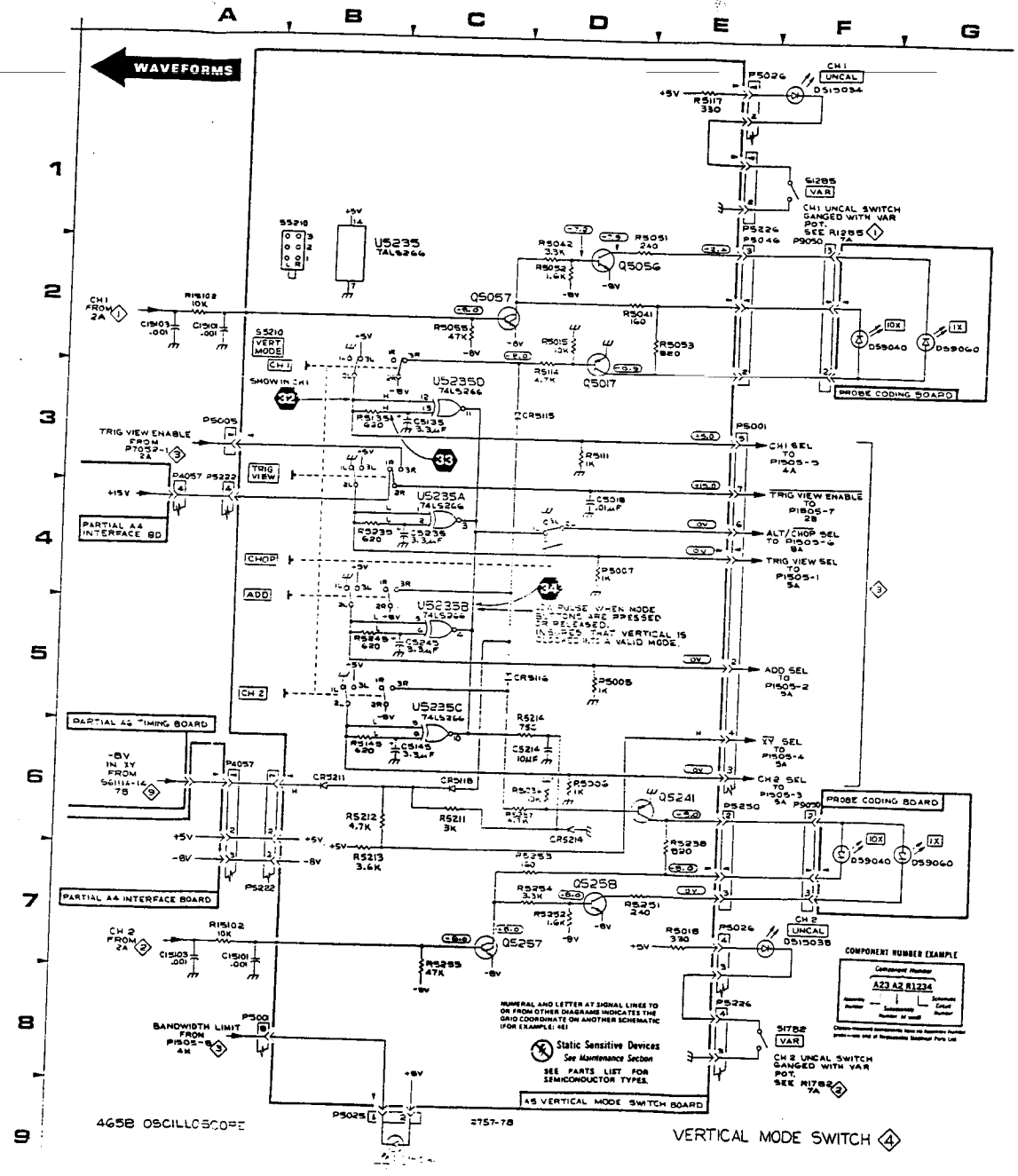

A2-BOARD COMPONENT LOCATIONS
(SN B030000 &UP)

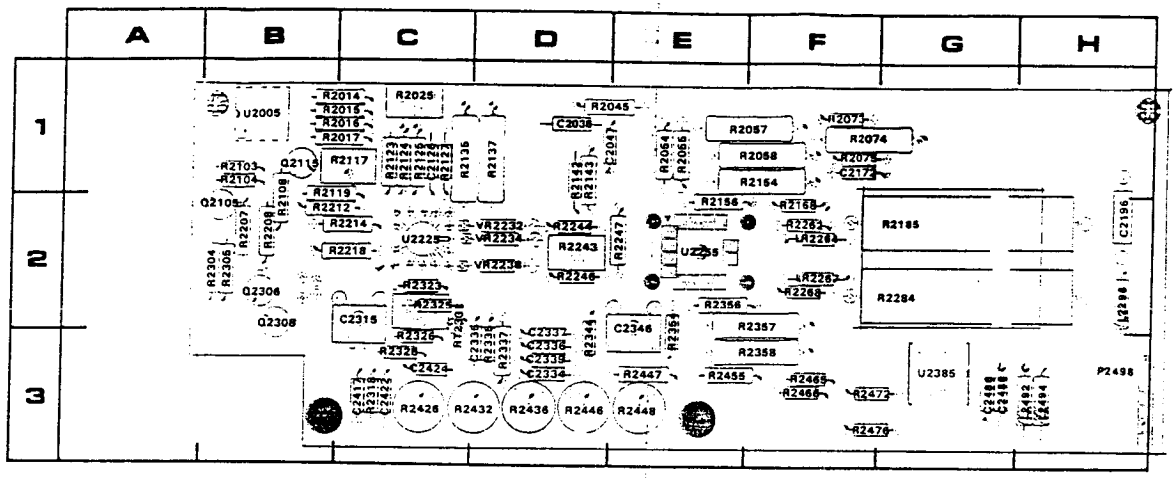


Figure 8-5A. A2 Vertical Output circuit board (SN B030000 & up).

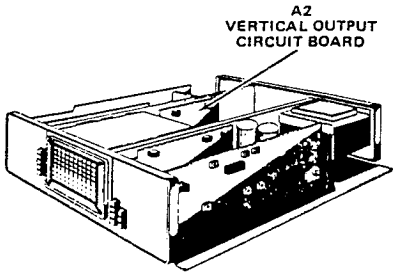


Static Sensitive Devices
*See Maintenance Section*

COMPONENT NUMBER EXAMPLE

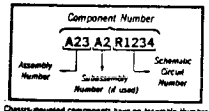


Chassis-mounted components have no Assembly Number prefix—see end of Replaceable Electrical Parts List.

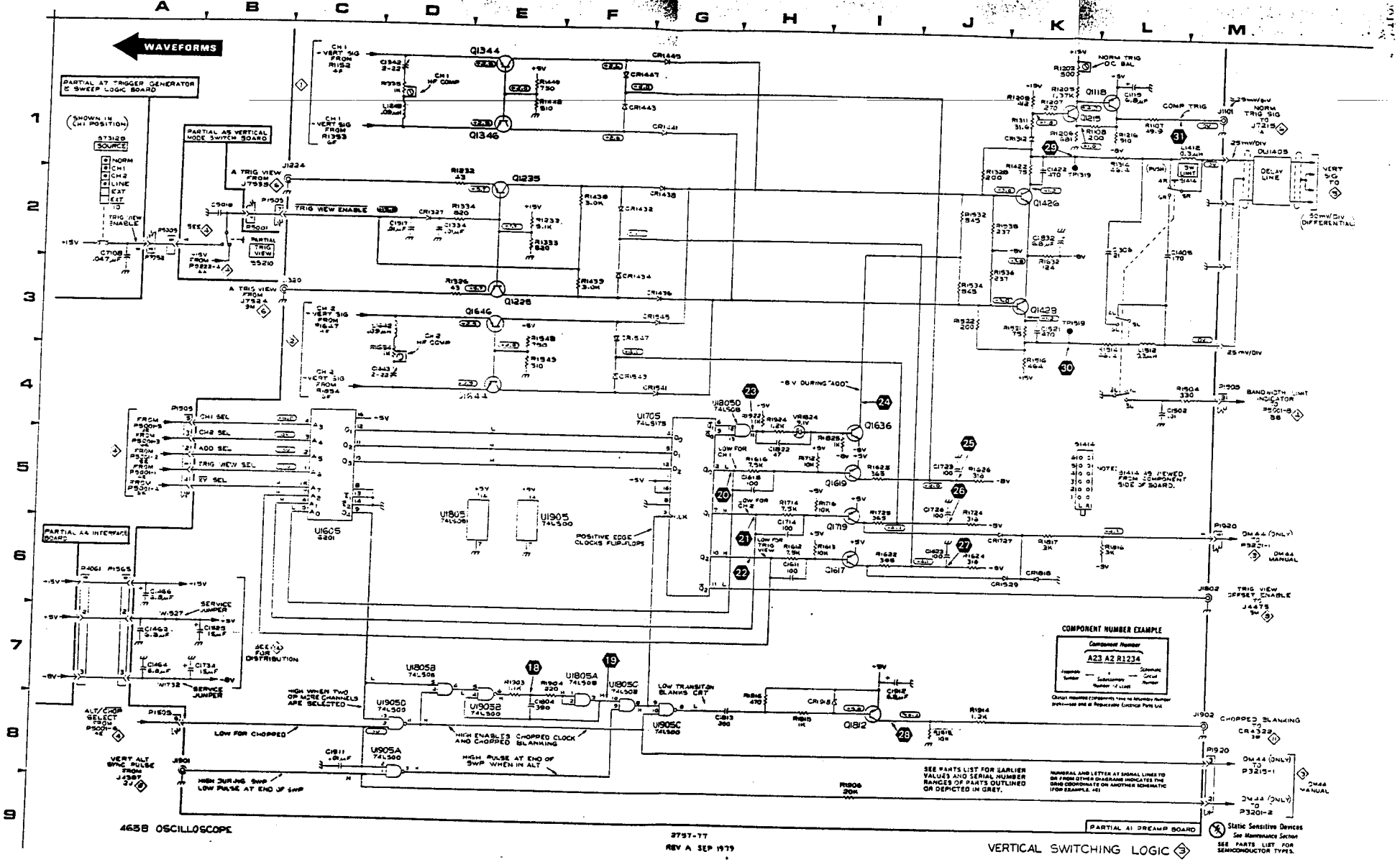


4658 OSCILLOSCOPE

2757-77
REV A SEP 1979

VERTICAL SWITCHING LOGIC 3

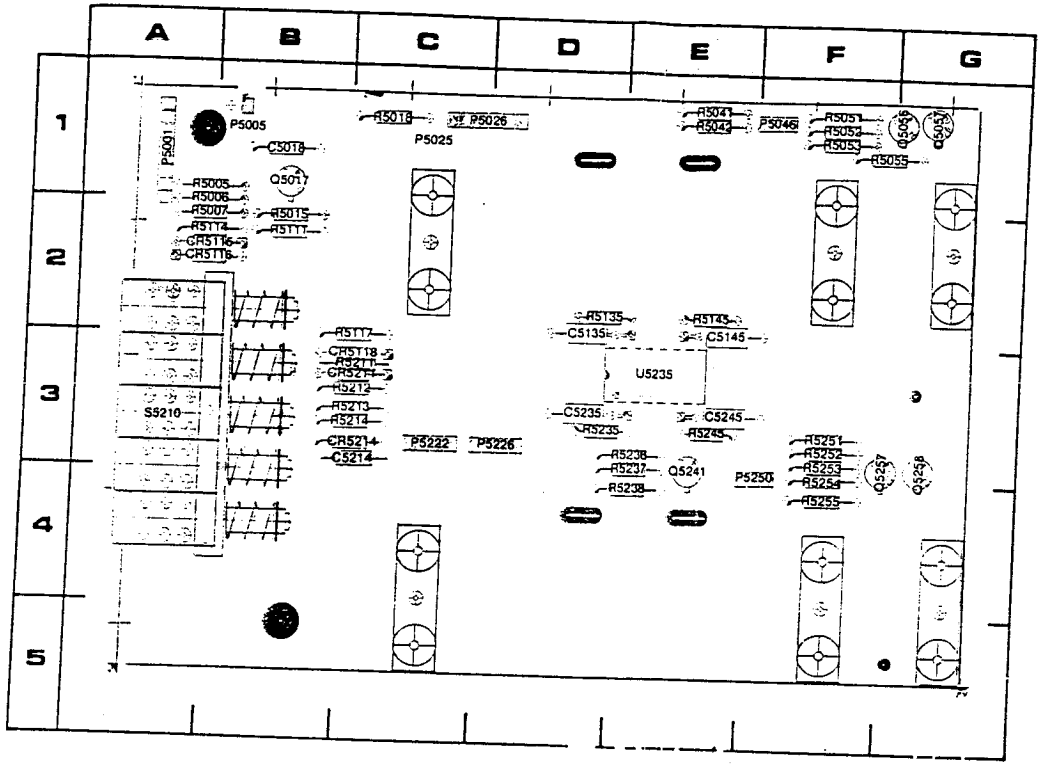


Figure 8-4. A5-Vertical Mode Switch circuit board.

2757-39

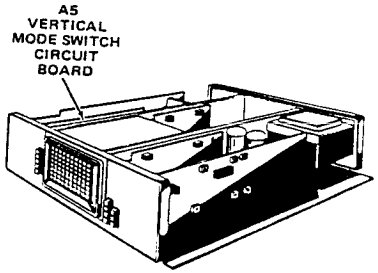


Static Sensitive Devices
*See Maintenance Section*

COMPONENT NUMBER EXAMPLE

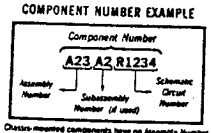


Chassis-mounted components have no Assembly Number prefix—see end of Replaceable Electrical Parts List.

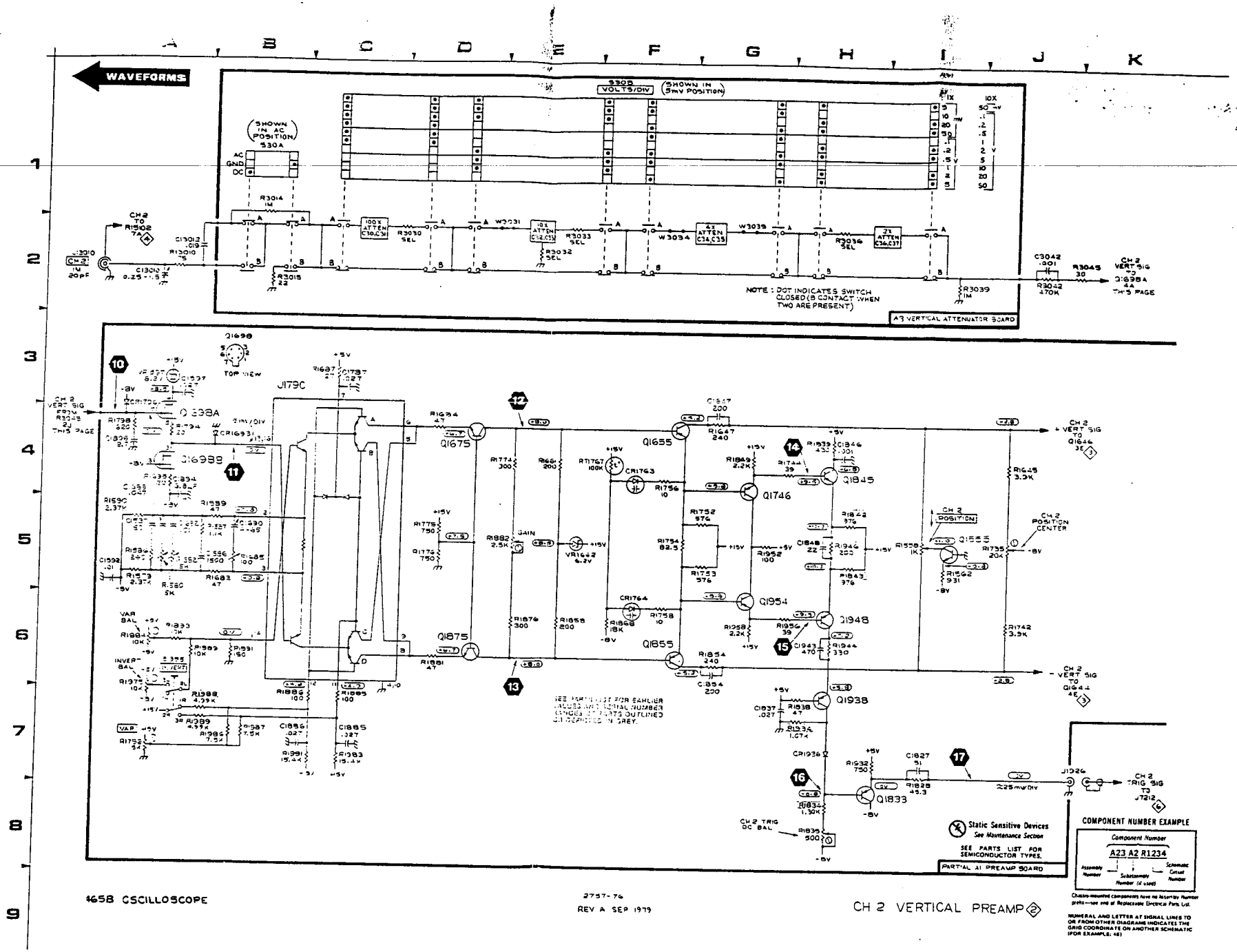


465B OSCILLOSCOPE

2757-74
REV A SEP 1979

## 465B CONTROL SETTINGS

AC Waveforms

| | |
|---|---|
| VERT MODE | CH 1 |
| VOLTS/DIV | 5 mV |
| CH 1 AC-GND-DC | DC |
| Vertical POSITION | Midrange |
| Input | 20 mV positive-going square wave |

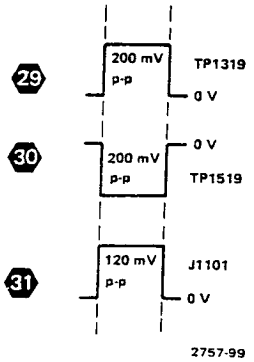


## VERTICAL SWITCHING LOGIC DIAGRAM 3

**P/O A4 ASSY**

| CIRCUIT NUMBER | SCHEM LOCATION | BOARD LOCATION | CIRCUIT NUMBER | SCHEM LOCATION | BOARD LOCATION | CIRCUIT NUMBER | SCHEM LOCATION | BOARD LOCATION |
|---|---|---|---|---|---|---|---|---|
| P4061 | 6A | 2H | | | | | | |

*P/O A4 ASSY also shown on diagram(s) 4, 5, 7, 8, 9, 10, 11, 12, and 13*

**P/O A5 ASSY**

| CIRCUIT NUMBER | SCHEM LOCATION | BOARD LOCATION | CIRCUIT NUMBER | SCHEM LOCATION | BOARD LOCATION | CIRCUIT NUMBER | SCHEM LOCATION | BOARD LOCATION |
|---|---|---|---|---|---|---|---|---|
| C5018 | 2B | 1B | P5001<br>P5005 | 2B<br>2A | 1A<br>1B | S5210 | 3B | 3A |

*P/O A5 ASSY also shown on diagram 4*

**P/O A7 ASSY**

| CIRCUIT NUMBER | SCHEM LOCATION | BOARD LOCATION | CIRCUIT NUMBER | SCHEM LOCATION | BOARD LOCATION | CIRCUIT NUMBER | SCHEM LOCATION | BOARD LOCATION |
|---|---|---|---|---|---|---|---|---|
| C7108 | 2A | 2B | P7052 | 3A | 1G | S7312B | 1A | 3C |

*P/O A7 ASSY also shown on diagram(s) 6, 7, and 12*

**CHASSIS MOUNTED PARTS**

| CIRCUIT NUMBER | SCHEM LOCATION | BOARD LOCATION | CIRCUIT NUMBER | SCHEM LOCATION | BOARD LOCATION | CIRCUIT NUMBER | SCHEM LOCATION | BOARD LOCATION |
|---|---|---|---|---|---|---|---|---|
| DL11405 | 1M | CHASSIS | | | | | | |

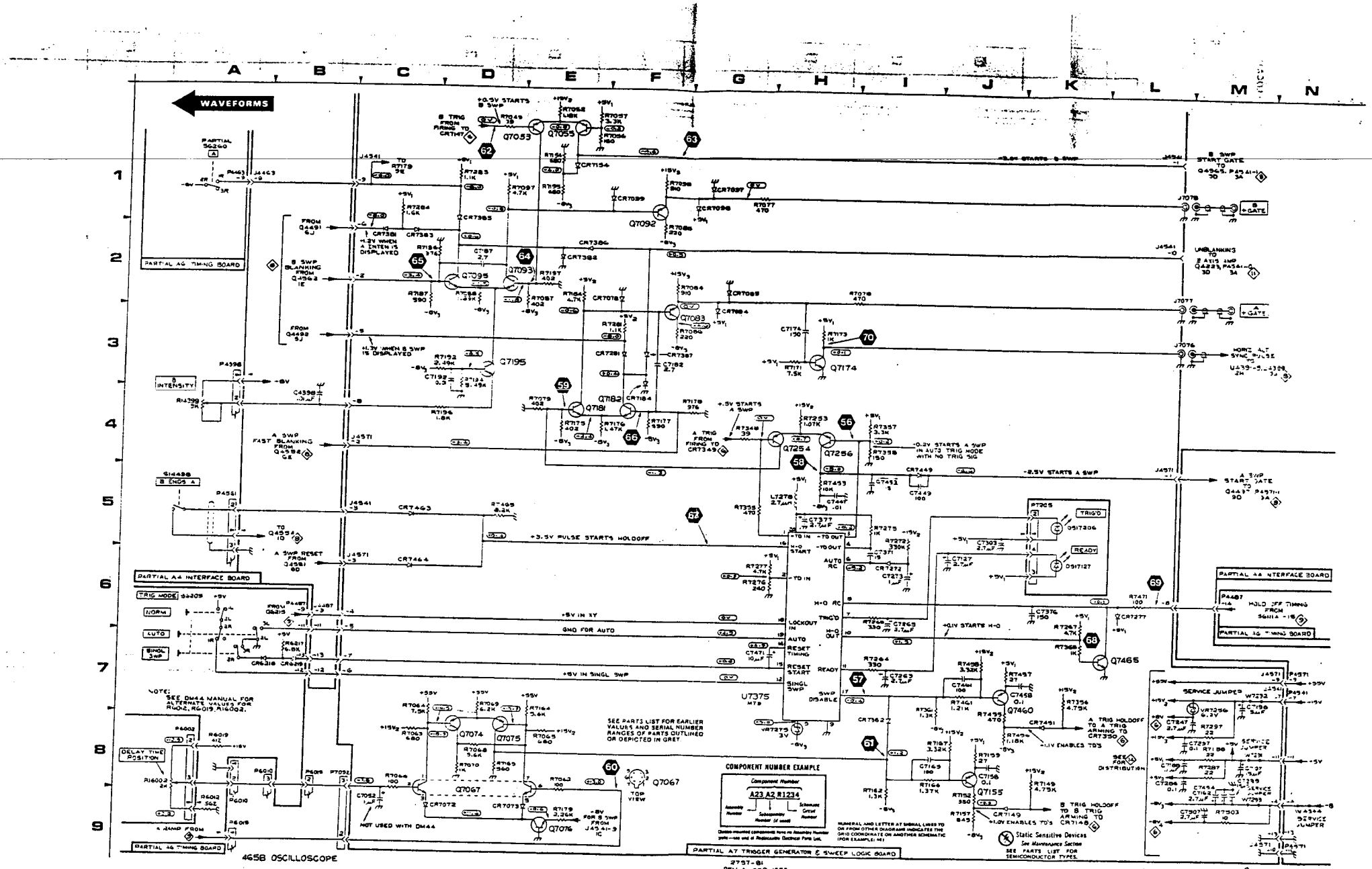
WAVEFORMS
PARTIAL A6 TIMING BOARD
PARTIAL A4 INTERFACE BOARD
PARTIAL A7 TRIGGER GENERATOR & SWEEP LOGIC BOARD
COMPONENT NUMBER EXAMPLE
Static Sensitive Devices
SEE PARTS LIST FOR SEMICONDUCTOR TYPES.
4658 OSCILLOSCOPE
2757-81
REV A SEP 1979
SWEEP & Z AXIS LOGIC 7

A4-BOARD COMPONENT LOCATIONS

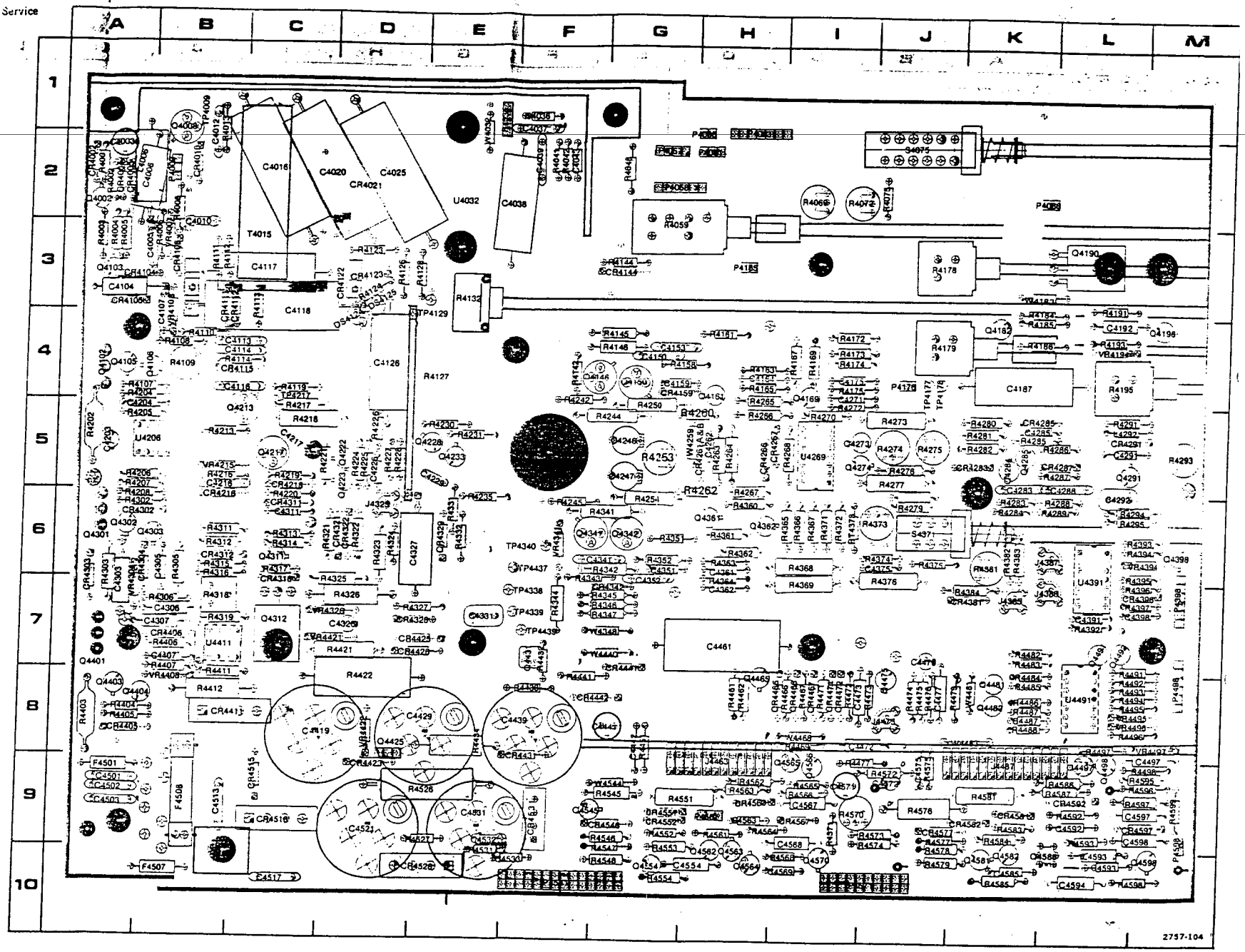


Figure 8-7. A4-Interface circuit board.

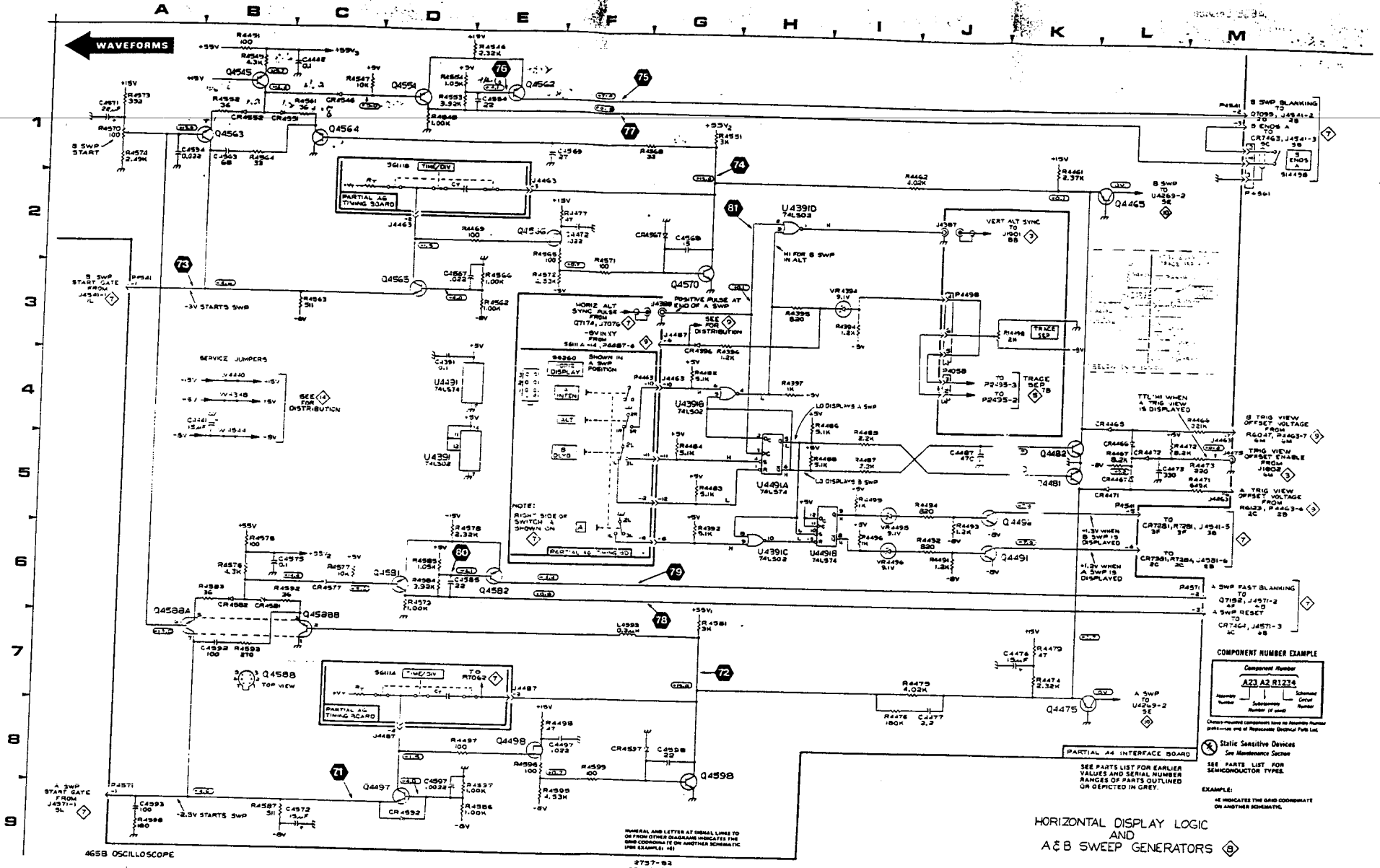


HORIZONTAL DISPLAY LOGIC AND A&B SWEEP GENERATORS 8

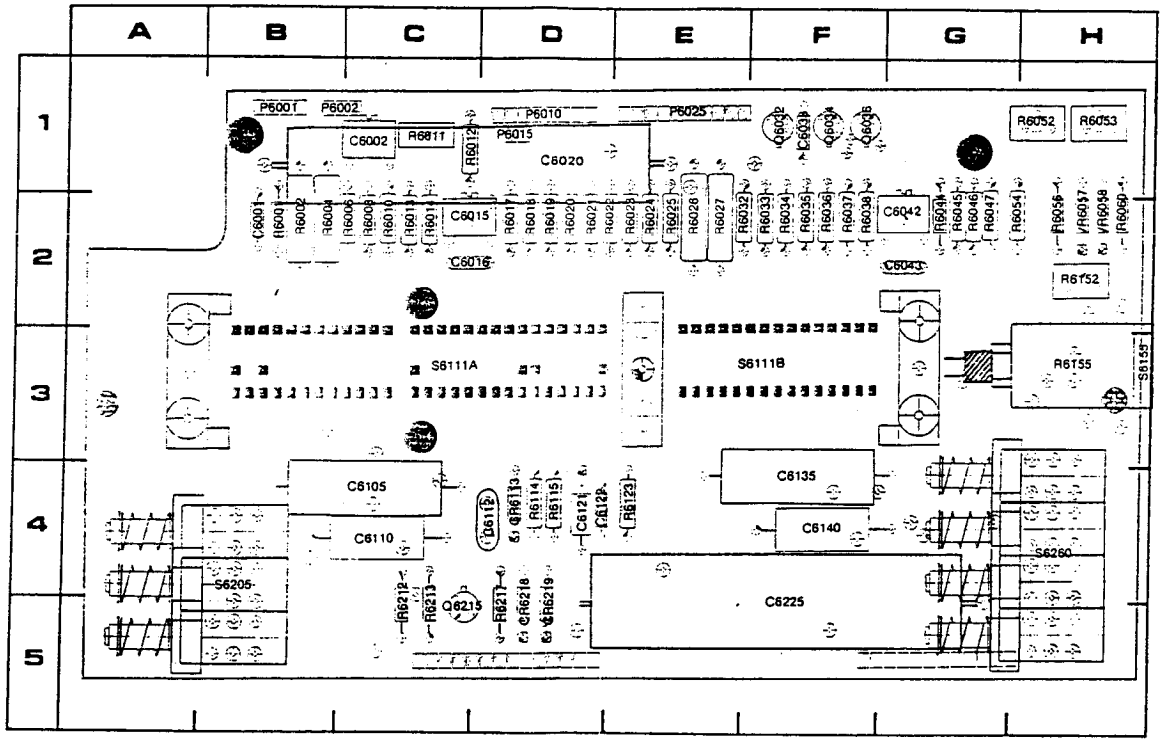


Figure 8-8. A6-Timing circuit board.

2757-44

Static Sensitive Devices
*See Maintenance Section*

COMPONENT NUMBER EXAMPLE

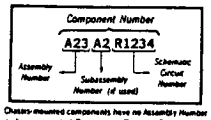


Chassis-mounted components have no Assembly Number prefix—see end of Replaceable Electrical Parts List.

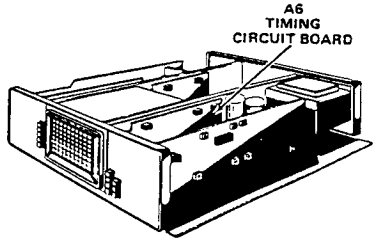

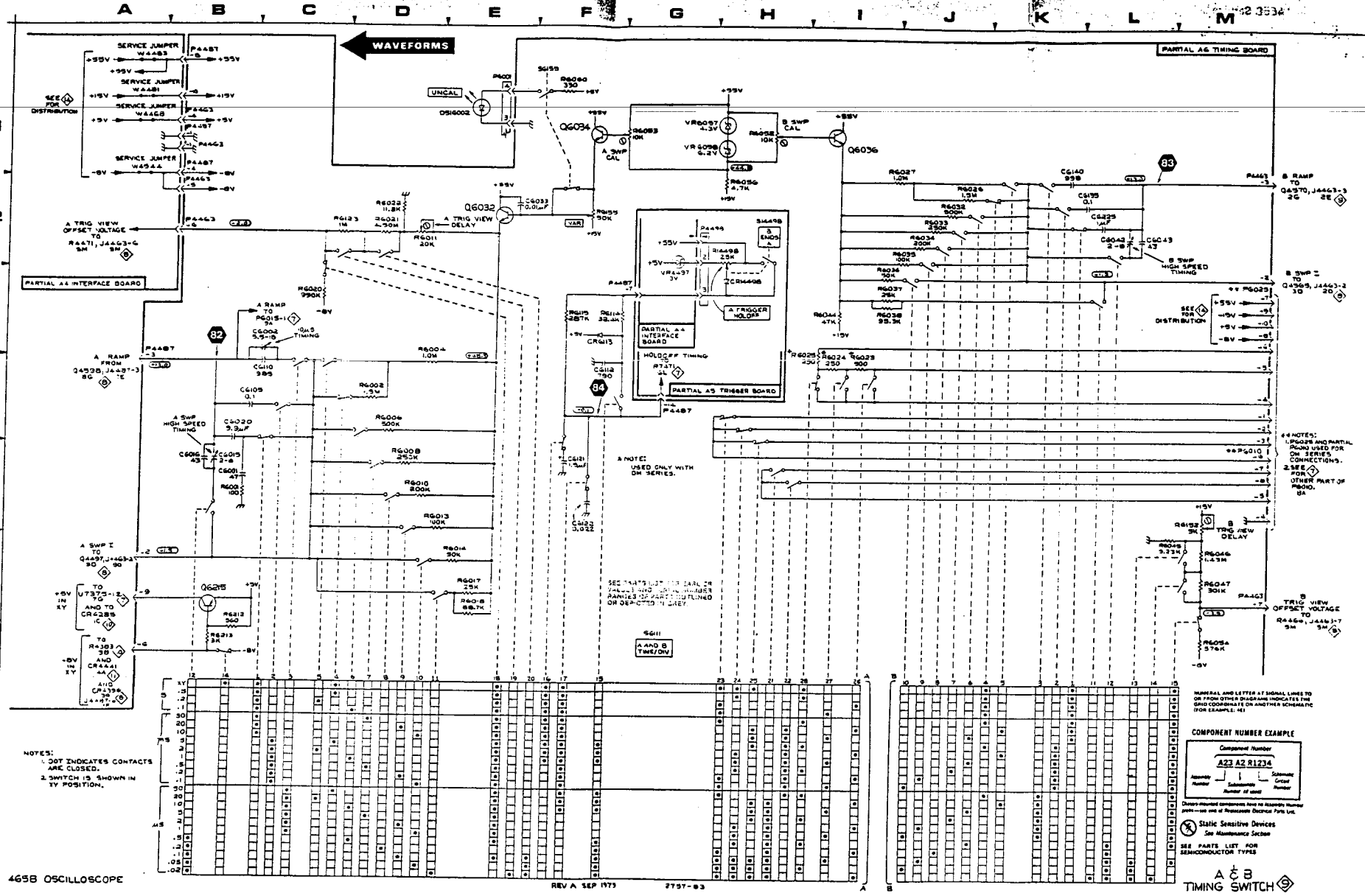
WAVEFORMS
PARTIAL A6 TIMING BOARD
PARTIAL A4 INTERFACE BOARD
PARTIAL A5 TRIGGER BOARD
A TRIGGER HOLDOFF
HOLDOFF TIMING
A AND B TIME/DIV
A TRIG VIEW DELAY
B TRIG VIEW DELAY
A TRIG VIEW OFFSET VOLTAGE TO R4471, J4463-6 5M
B TRIG VIEW OFFSET VOLTAGE TO R4469, J4463-7 5M
A RAMP FROM Q4598, J4487-3 8G
A RAMP TO P6015-1 9A
A SWP I TO Q4497, J4463-2 3D
B RAMP TO Q4570, J4463-3 2E
B SWP I TO Q4569, J4463-2 3D
A SWP CAL
B SWP CAL
A SWP HIGH SPEED TIMING
B SWP HIGH SPEED TIMING
SEE FOR DISTRIBUTION
SERVICE JUMPER W4483
SERVICE JUMPER W4481
SERVICE JUMPER W4468
SERVICE JUMPER W4444
UNCAL
DS16002
Q6034
Q6036
Q6032
Q6215
NOTES:
1. DOT INDICATES CONTACTS ARE CLOSED.
2. SWITCH IS SHOWN IN XY POSITION.
NUMERAL AND LETTER AT SIGNAL LINES TO OR FROM OTHER DIAGRAMS INDICATES THE GRID COORDINATE ON ANOTHER SCHEMATIC (FOR EXAMPLE: 4E)
COMPONENT NUMBER EXAMPLE
Component Number
A23 A2 R1234
Static Sensitive Devices
See Maintenance Section
SEE PARTS LIST FOR SEMICONDUCTOR TYPES
4658 OSCILLOSCOPE
REV A SEP 1973
2757-83
A & B TIMING SWITCH 9

# 465B CONTROL SETTINGS

## DC Voltages

| | |
|---|---|
| A TIME/DIV | X-Y |
| CH 2 POSITION | Beam centered |
| Horizontal POSITION | Beam centered |
| AC-GND-DC (both) | GND |

## AC Waveforms

| | |
|---|---|
| A TRIG MODE | AUTO (no trigger signal) |
| HORIZ DISPLAY | A |
| A TIME/DIV | 1 ms |
| Horizontal POSITION | Trace centered |
| AC-GND-DC (both) | GND |

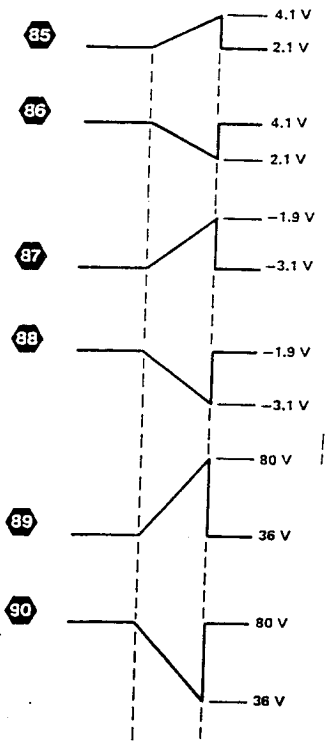


2757-106



## A & B TIMING SWITCH DIAGRAM 9

P/O A4 ASSY

| CIRCUIT NUMBER | SCHEM LOCATION | BOARD LOCATION | CIRCUIT NUMBER | SCHEM LOCATION | BOARD LOCATION | CIRCUIT NUMBER | SCHEM LOCATION | BOARD LOCATION |
|---|---|---|---|---|---|---|---|---|
| P4498 | 2G | 8M | W4468 | 1A | 8I | W4544 | 1A | 9G |
| | | | W4481 | 1A | 8K | | | |
| VR4497 | 3G | 8M | W4483 | 1A | 8K | | | |

*P/O A4 ASSY also shown on diagrams 3, 4, 5, 7, 8, 10, 11, 12, and 13*

P/O A6 ASSY

| CIRCUIT NUMBER | SCHEM LOCATION | BOARD LOCATION | CIRCUIT NUMBER | SCHEM LOCATION | BOARD LOCATION | CIRCUIT NUMBER | SCHEM LOCATION | BOARD LOCATION |
|---|---|---|---|---|---|---|---|---|
| C6001 | 5B | 2B | Q6034 | 1F | 1F | R6035 | 2J | 2F |
| C6002 | 3C | 1C | Q6036 | 1I | 1F | R6036 | 2I | 2F |
| C6015 | 5B | 2C | Q6215 | 6B | 5C | R6037 | 3I | 2F |
| C6016 | 5B | 2C | | | | R6038 | 3I | 2F |
| C6020 | 4B | 2D | R6001 | 5B | 2B | R6044 | 3I | 2G |
| C6033 | 2E | 1F | R6002 | 4D | 2B | R6045 | 6M | 2G |
| C6042 | 2L | 2G | R6004 | 4D | 2B | R6046 | 6M | 2G |
| C6043 | 2L | 2G | R6006 | 4D | 2C | R6047 | 6M | 2G |
| C6105 | 4B | 4C | R6008 | 5D | 2C | R6052 | 1H | 1H |
| C6110 | 4C | 4C | R6010 | 5D | 2C | R6053 | 1G | 1H |
| C6112 | 4F | 4D | R6011 | 2D | 1C | R6054 | 7M | 2H |
| C6121 | 5F | 4D | R6013 | 5E | 2C | R6056 | 2H | 2H |
| C6122 | 5F | 4D | R6014 | 6E | 2C | R6060 | 1F | 2H |
| C6135 | 2L | 4F | R6017 | 6E | 2D | R6114 | 3F | 4D |
| C6140 | 1K | 4F | R6018 | 6E | 2D | R6115 | 3F | 3H |
| C6225 | 2L | 5F | R6020 | 3C | 2D | R6123 | 2C | 4E |
| | | | R6021 | 2D | 2D | R6152 | 5M | 2H |
| CR6113 | 3F | 4D | R6022 | 2D | 2D | R6155 | 2F | 3H |
| | | | R6023 | 4I | 2E | R6212 | 7B | 5C |
| P4463 | 1B | 5G | R6024 | 4I | 2E | R6213 | 7B | 5C |
| P448 | 1B | 5D | R6025 | 3I | 2E | | | |
| P6001 | 1E | 1B | R6026 | 2J | 2E | S6111B | 7G | 3C |
| P6010 | 5M | 1D | R6027 | 1I | 2E | S6155 | 1F | 3H |
| P6025 | 3M | 1E | R6032 | 2J | 2E | | | |
| | | | R6033 | 2J | 2F | VR6057 | 1H | 2H |
| Q6032 | 2E | 1F | R6034 | 2J | 2F | VR6058 | 1H | 2H |

*P/O A6 ASSY also shown on diagrams 7, 8, and 10*

CHASSIS MOUNTED PARTS

| CIRCUIT NUMBER | SCHEM LOCATION | BOARD LOCATION | CIRCUIT NUMBER | SCHEM LOCATION | BOARD LOCATION | CIRCUIT NUMBER | SCHEM LOCATION | BOARD LOCATION |
|---|---|---|---|---|---|---|---|---|
| CR14498 | 3H | CHASSIS | R14498 | 2H | CHASSIS | | | |
| DS16002 | 1E | CHASSIS | S14498 | 3H | CHASSIS | | | |

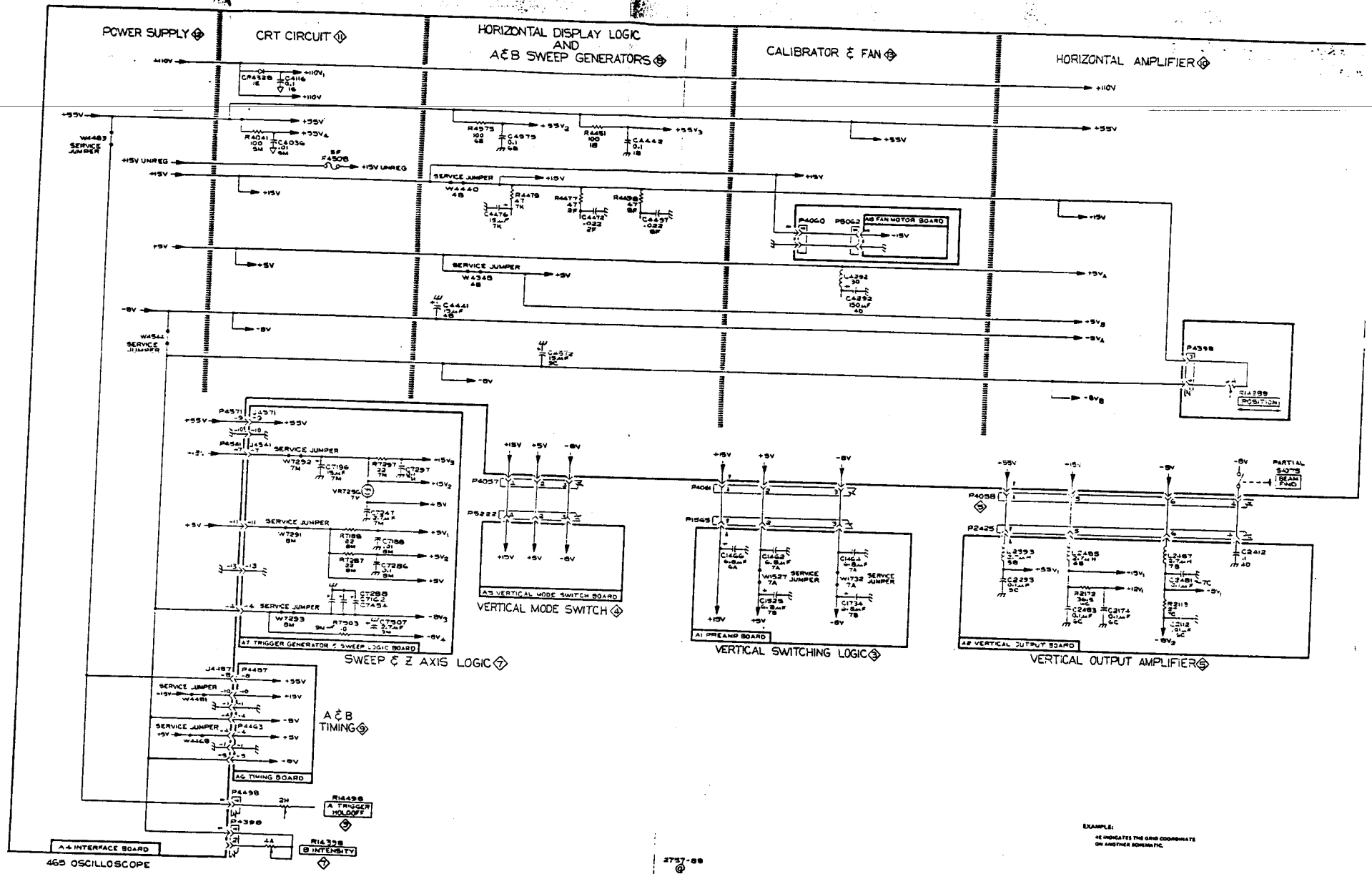


POWER DISTRIBUTION

POWER DISTRIBUTION

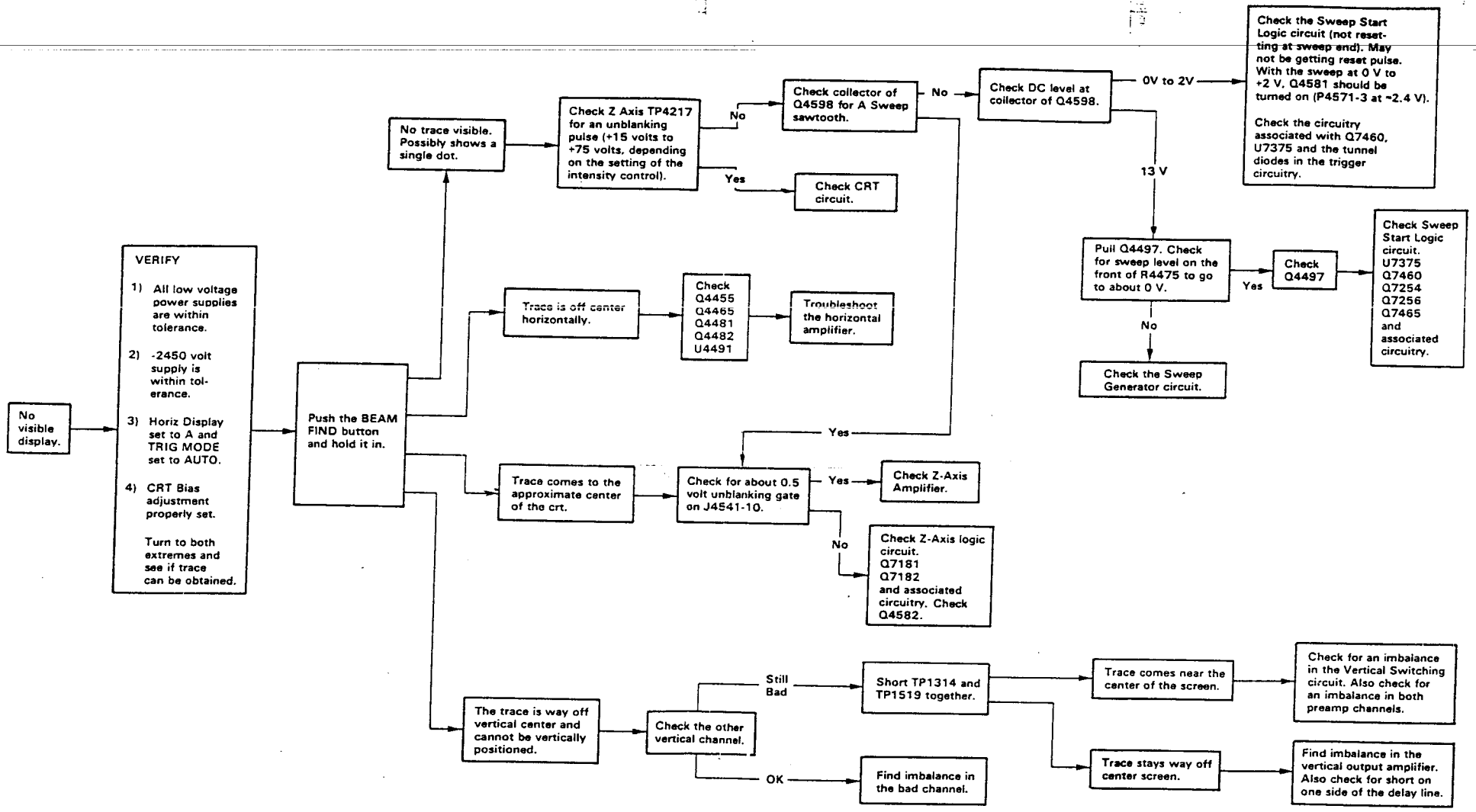


NO VISIBLE DISPLAY TROUBLESHOOTING

## CALIBRATOR AND FAN DIAGRAM 13

P/O A4 ASSY

| CIRCUIT NUMBER | SCHEM LOCATION | BOARD LOCATION | CIRCUIT NUMBER | SCHEM LOCATION | BOARD LOCATION |
|---|---|---|---|---|---|
| C4187 | 3B | 4K | R4184 | 4B | 3K |
| C4192 | 4B | 4L | R4185 | 3B | 4K |
| C4291 | 5C | 5L | R4186 | 3A | 4K |
| C4292 | 4D | 5L | R4191 | 3C | 3L |
| CR4291 | 4C | 5L | R4291 | 5C | 5L |
| L4292 | 3D | 5L | R4293 | 5D | 5M |
| P4060 | 2E | 1H | R4294 | 5D | 6L |
| Q4182 | 3B | 4K | R4295 | 6D | 6L |
| Q4196 | 4C | 4M | TP4177 | 4A | 4J |
| Q4291 | 5D | 5L | TP4178 | 3C | 4J |
| | | | W4183 | 4A | 3K |

*P/O A4 ASSY also shown on diagrams 3, 4, 5, 7, 8, 9, 10, 11, and 12*

P/O A8 ASSY

| CIRCUIT NUMBER | SCHEM LOCATION | BOARD LOCATION | CIRCUIT NUMBER | SCHEM LOCATION | BOARD LOCATION |
|---|---|---|---|---|---|
| B8045 | 3F | 1A | R8033 | 5J | 1A |
| C8064 | 2I | 2C | R8035 | 5J | 1A |
| CR8042 | 5I | 2A | R8036 | 6J | 1A |
| CR8044 | H | 2A | R8054 | 3I | 2B |
| CR8046 | 4I | 2B | R8056 | 3G | 2B |
| CR8048 | 5H | 2B | R8058 | 6H | 2C |
| CR8066 | 2I | 1C | R8065 | 4H | 1C |
| P8062 | 2F | 2C | RT8038 | 6J | 2A |
| Q8067 | 2H | 2C | U8061A | 5I | 1C |
| | | | U8061B | 5F | 1C |
| | | | U8061C | 5G | 1C |

## CHASSIS MOUNTED PARTS

| CIRCUIT NUMBER | SCHEM NUMBER | SCHEM LOCATION | CIRCUIT NUMBER | SCHEM NUMBER | SCHEM LOCATION |
|---|---|---|---|---|---|
| C3042 | 1 | 2J | Q4190 | 12 | 8D |
| C3042 | 2 | 2J | Q4102 | 12 | 6G |
| C13010 | 1 | 2A | Q4301 | 12 | 1G |
| C13010 | 2 | 2A | Q4312 | 12 | 5G |
| C13012 | 1 | 2A | Q4401 | 12 | 4G |
| C13012 | 2 | 2A | Q14009 | 11 | 8F |
| C15101 | 4 | 2A | R3042 | 1 | 2J |
| C15101 | 4 | 7A | R3042 | 2 | 2J |
| C15103 | 4 | 2A | R3045 | 1 | 2J |
| C15103 | 4 | 7A | R3045 | 2 | 2K |
| CR14498 | 9 | 3H | R4059A | 11 | 2B |
| DL11405 | 3 | 1M | R4059B | 11 | 4J |
| DS9040 | 4 | 2F | R4132 | 11 | 5J |
| DS9040 | 4 | 7F | R4178 | 11 | 4M |
| DS9060 | 4 | 2G | R4179 | 11 | 2M |
| DS9060 | 4 | 7G | R4195 | 12 | 8E |
| DS14086 | 12 | 7C | R13010 | 1 | 2A |
| DS14087 | 12 | 8C | R13010 | 2 | 2A |
| DS15034 | 4 | 1F | R14288A | 10 | 6A |
| DS15036 | 4 | 9C | R14288B | 10 | 6A |
| DS15038 | 4 | 7F | R14398 | 7 | 4A |
| DS16001 | 10 | 8C | R14498 | 8 | 3J |
| DS16002 | 9 | 1E | R14498 | 9 | 2H |
| DS17105 | 12 | 6B | R15102 | 4 | 2A |
| DS17127 | 7 | 5K | R15102 | 4 | 7A |
| DS17206 | 7 | 5K | R16002 | 7 | 8A |
| F14500 | 12 | 6A | S1285 | 4 | 1F |
| J4387 | 8 | 2J | S1782 | 4 | 8F |
| J13010 | 1 | 2A | S4075 | 11 | 1C |
| J13010 | 2 | 2A | S6111A | 11 | 4A |
| L14165 | 11 | 4L | S7112D | 6 | 1M |
| L14176 | 11 | 2L | S14498 | 7 | 5A |
| P4058 | 8 | 4J | S14498 | 8 | 1N |
| P4086 | 12 | 7C | S14498 | 9 | 2H |
| P4498 | 8 | 3J | S14500 | 12 | 4B |
| P14325 | 11 | 5A | S14510 | 12 | 6A |
| P14500 | 12 | 6A | S14520 | 12 | 5A |
| | | | S17010 | 6 | 3F |
| | | | T14500 | 12 | CA |

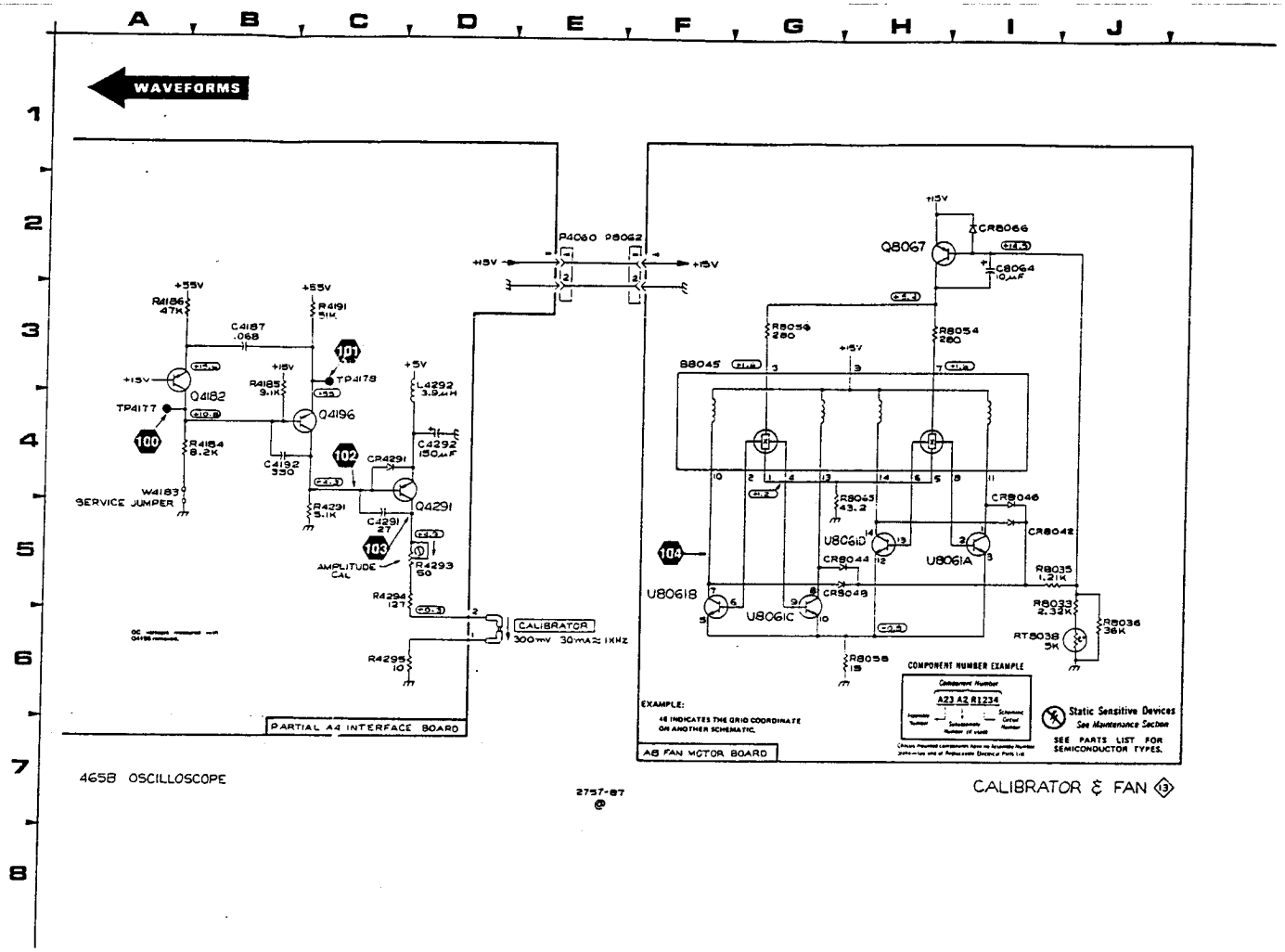
WAVEFORMS
A B C D E F G H I J
1 2 3 4 5 6 7 8
+55V
R4186 47K
C4187 .068
R4191 51K
+15V
Q4182
TP4177
100
R4184 8.2K
W4183
SERVICE JUMPER
R4185 9.1K
Q4196
101
TP4178
C4192 330
102
CR4291
Q4291
R4291 5.1K
C4291 27
103
AMPLITUDE CAL
+5V
L4292 3.9μH
C4292 150μF
R4293 50
R4294 127
R4295 10
CALIBRATOR
300mV 30mA≈1KHZ
PARTIAL A4 INTERFACE BOARD
P4060 P8062
+5V
+15V
Q8067
CR8066
C8064 10μF
R8059 280
R8054 280
88045
R8065 43.2
CR8046
CR8042
U8061D
U8061A
CR8044
CR8049
U8061C
U80618
R8035 1.21K
R8033 2.32K
R8036 36K
RT8038 5K
R8058 15
COMPONENT NUMBER EXAMPLE
A23 A2 R1234
EXAMPLE:
46 INDICATES THE GRID COORDINATE ON ANOTHER SCHEMATIC.
A8 FAN MOTOR BOARD
Static Sensitive Devices
See Maintenance Section
SEE PARTS LIST FOR SEMICONDUCTOR TYPES.
4658 OSCILLOSCOPE
2757-87
CALIBRATOR & FAN 13

A8-BOARD COMPONENT LOCATIONS

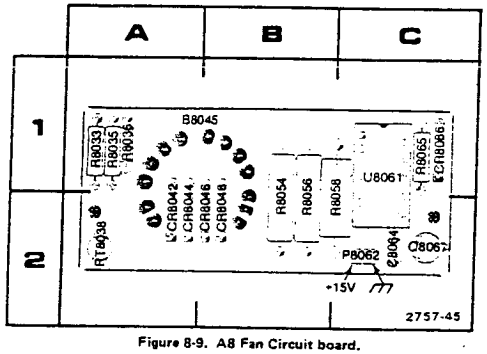


Figure 8-9. A8 Fan Circuit board.

Static Sensitive Devices
*See Maintenance Section*

COMPONENT NUMBER EXAMPLE

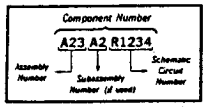


Chassis-mounted components have no Assembly Number prefix—see end of Replaceable Electrical Parts List.

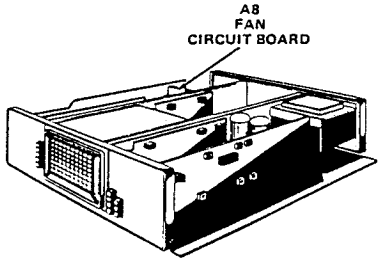


REV A JUN 1979

## 465B CONTROL SETTINGS

### DC Voltages

Remove Q1496 to make dc measurements in the Calibrator circuit.

### AC Waveforms

Fan circuit waveform taken at 25°C ambient temperature.

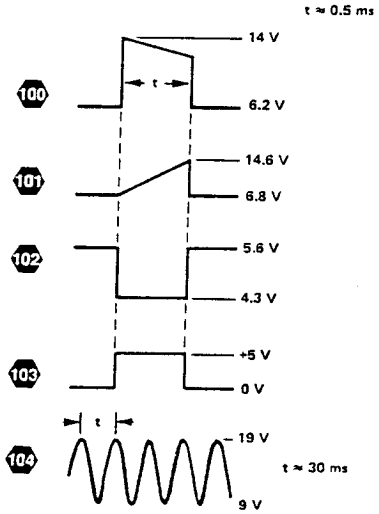


2757-109

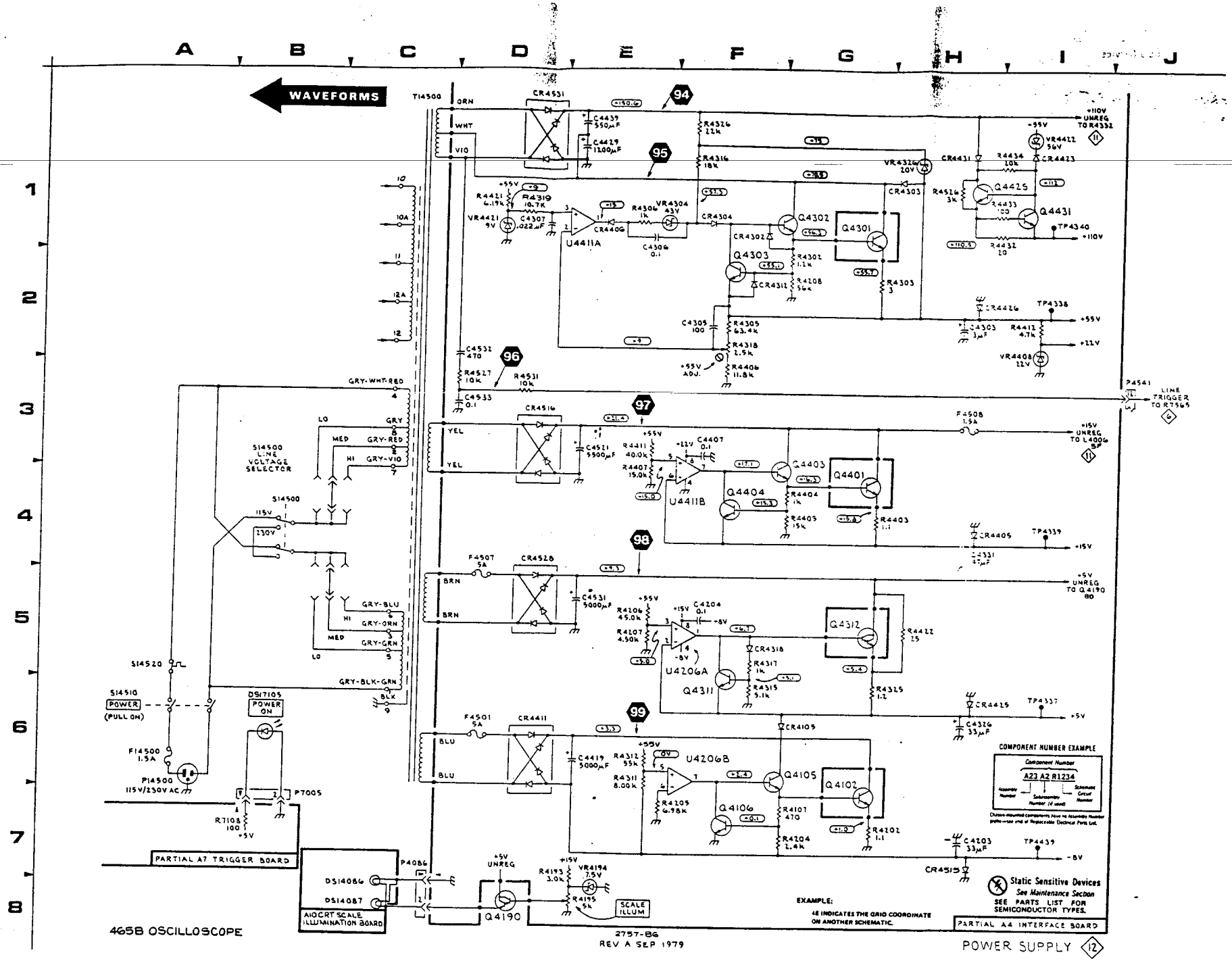
WAVEFORMS
COMPONENT NUMBER EXAMPLE
Component Number
A23 A2 R1234
Static Sensitive Devices
See Maintenance Section
SEE PARTS LIST FOR SEMICONDUCTOR TYPES.
EXAMPLE:
4E INDICATES THE GRID COORDINATE ON ANOTHER SCHEMATIC.
PARTIAL A4 INTERFACE BOARD
PARTIAL A7 TRIGGER BOARD
AIO CRT SCALE ILLUMINATION BOARD
S14500 LINE VOLTAGE SELECTOR
S14510 POWER (PULL ON)
DS17105 POWER ON
LINE TRIGGER TO R7569
+110V UNREG TO R4332
+15V UNREG TO L4006 5P
+5V UNREG TO Q4190 BD
SCALE ILLUM
465B OSCILLOSCOPE
2757-86
REV A SEP 1979
POWER SUPPLY

WAVEFORMS

## 465B CONTROL SETTINGS

### DC Voltages

Line voltage 115 vac

### AC Waveforms

Line voltage 115 vac

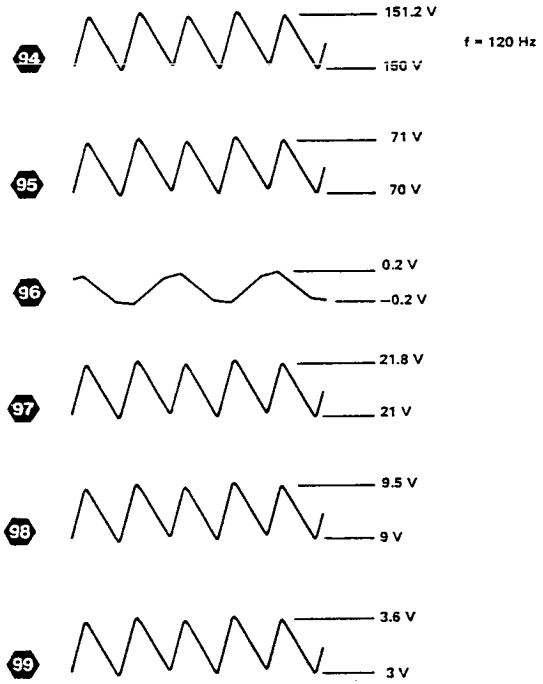


2757-108

@

## CRT CIRCUIT DIAGRAM 11

P/O A4 ASSY

| CIRCUIT NUMBER | SCHEM LOCATION | BOARD LOCATION |
|---|---|---|
| C4003 | 7D | 2A |
| C4005 | 4H | 3A |
| C4006 | 5F | 2A |
| C4010 | 4I | 2B |
| C4012 | 6F | 2B |
| C4016 | 6H | 2C |
| C4020 | 6H | 2C |
| C4025 | 6J | 2D |
| C4036 | 5M | 1F |
| C4037 | 3M | 1F |
| C4038 | 5J | 2E |
| C4039 | 5M | 2F |
| C4043 | 4M | 2F |
| C4104 | 3H | 3A |
| C4107 | 3H | 4B |
| C4113 | 2E | 4B |
| C4114 | 1F | 4B |
| C4116 | 1G | 4B |
| C4117 | 3I | 3C |
| C4118 | 2I | 3C |
| C4126 | 7J | 4D |
| C4216 | 2F | 5B |
| C4217 | 4F | 5C |
| C4226 | 6B | 5D |
| C4229 | 5C | 5E |
| C4311 | 3G | 6C |
| C4327 | 4C | 6D |
| CR4002 | 5D | 2A |
| CR4004 | 5F | 2A |
| CR4005 | 7E | 2A |
| CR4010 | 5E | 2B |
| CR4021 | 7G | 2D |
| CR4104 | 6E | 3A |
| CR4108 | 5H | 3B |
| CR4111 | 3I | 3B |
| CR4112 | 2I | 3B |
| CR4115 | 1F | 4B |
| CR4122 | 3J | 3D |
| CR4123 | 3J | 3D |
| CR4144 | 2C | 3G |
| CR4216 | 1G | 6B |
| CR4218 | 3F | 5C |
| CR4311 | 2H | 6C |
| CR4321 | 3E | 6D |
| CR4322 | 3B | 6D |
| CR4328 | 1E | 7D |
| CR4329 | 4C | 6E |
| CR4441 | 4B | 7G |
| CR4442 | 3B | 8G |

| CIRCUIT NUMBER | SCHEM LOCATION | BOARD LOCATION |
|---|---|---|
| DS4124 | 5J | 4D |
| DS4125 | 6J | 3D |
| F4508 | 5F | 9B |
| J4325 | 5A | 6D |
| L4006 | 5F | 2A |
| P4009 | 7F | 2B |
| P4035 | 5M | 1E |
| P4165 | 4M | 3H |
| P4176 | 2M | 4J |
| P4541 | 3A | 10F |
| Q4002 | 6D | 2A |
| Q4008 | 5E | 1B |
| Q4103 | 6E | 3A |
| Q4213 | 2F | 5B |
| Q4217 | 3F | 5C |
| Q4222 | 3E | 5D |
| Q4223 | 3D | 5D |
| Q4228 | 5C | 5E |
| Q4233 | 5D | 5E |
| R4001 | 5D | 2A |
| R4002 | 5E | 2A |
| R4003 | 6D | 3A |
| R4004 | 5D | 3A |
| R4005 | 6D | 3A |
| R4006 | 4H | 2B |
| R4008 | 5H | 2B |
| R4013 | 6E | 2B |
| R4041 | 5M | 2F |
| R4042 | 4N | 2F |
| R4048 | 4N | 2G |
| R4059A | 2B | 2G |
| R4059B | 4J | 2G |
| R4069 | 3M | 2I |
| R4072 | 4M | 2I |
| R4108 | 3H | 4B |
| R4109 | 3G | 4B |
| R4110 | 3H | 4B |
| R4111 | 3I | 3B |
| R4112 | 3I | 3B |
| R4113 | 2I | 3C |
| R4114 | 1G | 4B |
| R4119 | 2I | 4C |
| R4123 | 7H | 3D |
| R4124 | 3J | 3D |
| R4126 | 4I | 3D |

| CIRCUIT NUMBER | SCHEM LOCATION | BOARD LOCATION |
|---|---|---|
| R4127A | 5J | 4E |
| R4127B | 4J | 4F |
| R4127C | 5C | 4E |
| R4127D | 6C | 4F |
| R4128 | 6J | 3D |
| R4132 | 5J | 3E |
| R4144 | 2B | 3G |
| R4178 | 5M | 3J |
| R4179 | 2M | 4J |
| R4213 | 1E | 5B |
| R4216 | 2E | 5B |
| R4217 | 2G | 5C |
| R4218 | 4F | 3D |
| R4219 | 3F | 5C |
| R4220 | 3E | 6C |
| R4221 | 4E | 5C |
| R4224 | 2D | 5D |
| R4225 | 3E | 5D |
| R4226 | 8C | 5D |
| R4227 | 8B | 5D |
| R4228 | 5C | 5D |
| R4230 | 3C | 5E |
| R4231 | 4E | 5E |
| R4235 | 5D | 6E |
| R4313 | 3F | 6C |
| R4314 | 4D | 6C |
| R4321 | 3D | 6D |
| R4322 | 2D | 6D |
| R4323 | 5B | 6D |
| R4324 | 5E | 6D |
| R4327 | 3D | 7D |
| R4331 | 4E | 6E |
| R4331 | 5C | 6E |
| R4332 | 4C | 6E |
| R4441 | 4B | 8F |
| S4075 | 1D | 2J |
| T4015 | 6F | 3C |
| TP4009 | 6F | 1B |
| TP4129 | 6K | 3E |
| TP4217 | 2I | 4C |
| U4032 | 1I | 2E |
| VR4007 | 4I | 3B |
| VR4108 | 3H | 2B |
| VR4215 | 1E | 5B |
| W4032 | 1I | 1E |

*P/O A4 ASSY also shown on diagrams 3, 4, 5, 7, 8, 9, 10, 12, and 13*

CHASSIS MOUNTED PARTS

| CIRCUIT NUMBER | SCHEM LOCATION | BOARD LOCATION |
|---|---|---|
| L14165 | 4L | CHASSIS |
| L14176 | 2L | CHASSIS |
| P14325 | 5A | CHASSIS |
| Q14009 | 8F | CHASSIS |

| CIRCUIT NUMBER | SCHEM LOCATION | BOARD LOCATION |
|---|---|---|
| R4059A | 2B | CHASSIS |
| R4059B | 4J | CHASSIS |
| R4132 | 5J | CHASSIS |
| R4178 | 4M | CHASSIS |
| R4179 | 2M | CHASSIS |

| CIRCUIT NUMBER | SCHEM LOCATION | BOARD LOCATION |
|---|---|---|
| S4075 | 1C | CHASSIS |
| S6111A | 4A | CHASSIS |
| V14000 | 2L | CHASSIS |

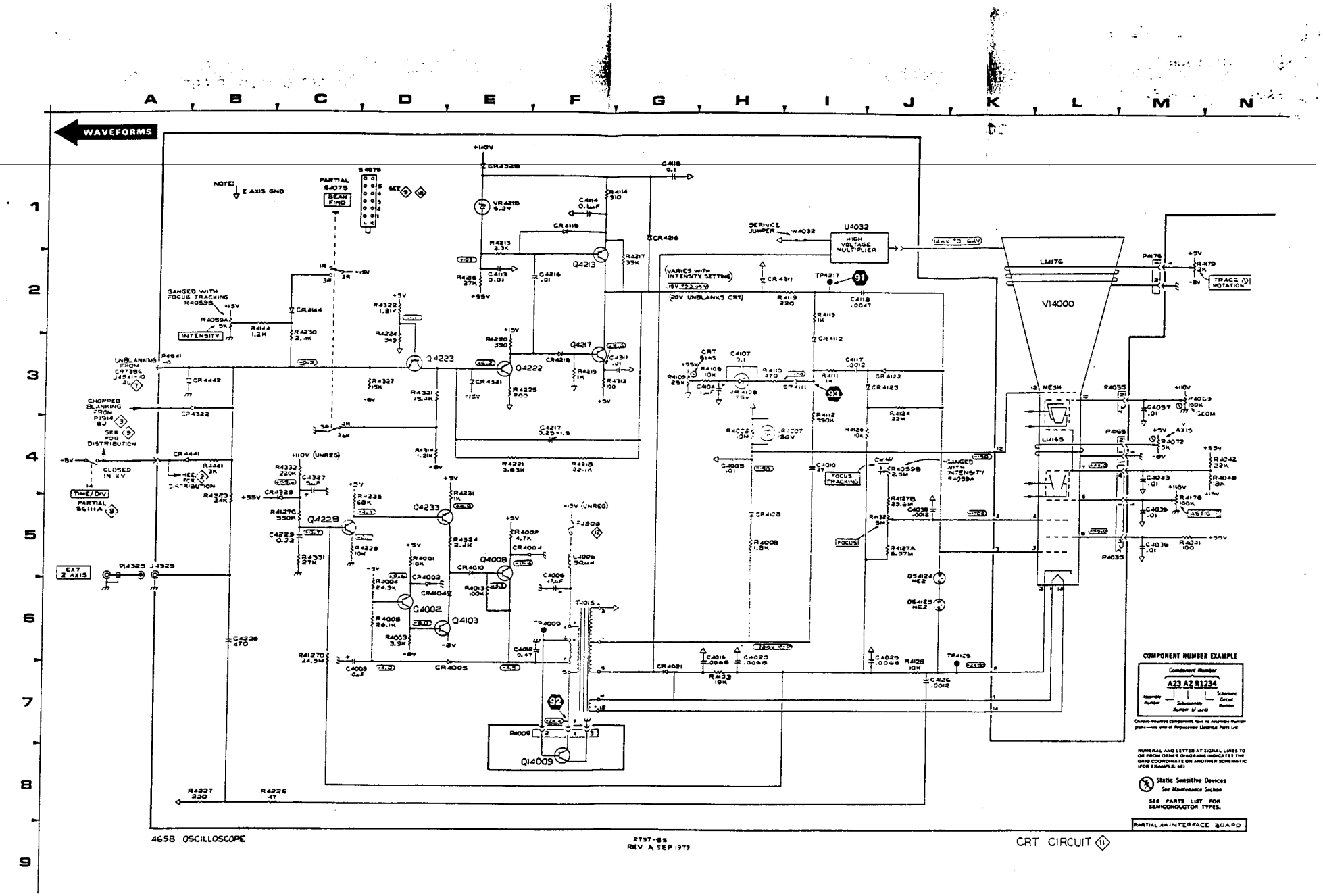
WAVEFORMS
NOTE: Z AXIS GND
PARTIAL S4075
BEAM FIND
S4075
SET
+110V
CR4328
C4116 0.1
VR4215 6.2V
C4114 0.1µF
R4214 510
CR4115
CR4216
R4213 3.3K
Q4213
R4217 39K
R4218 27K
C4113 0.01
C4216 .01
+55V
SERVICE JUMPER
W4032
U4032
HIGH VOLTAGE MULTIPLIER
(VARIES WITH INTENSITY SETTING)
(20V UNBLANKS CRT)
CR4311
TP4217
R4119 220
C4118 .0047
L14176
V14000
P4175
R4179 2K
TRACE ROTATION
GANGED WITH FOCUS TRACKING R4059B
R4059A 5K
INTENSITY
R4144 1.2K
R4230 2.4K
CR4144
R4322 1.31K
R4224 345
Q4223
R4220 390
Q4217
Q4222
CR4218
R4219 1K
R4313 100
R4327 15K
R4331 15.4K
R4225 900
C4217 0.25-1.5
R4221 3.83K
R4218 22.1K
UNBLANKING FROM CR7386 J4541-10
P4541
CR4442
CHOPPED BLANKING FROM P1914 8J
SEE FOR DISTRIBUTION
CR4322
CR4441
R4441 3K
CLOSED IN XY
TIME/DIV
PARTIAL S6111A
R4332 220K
C4327 .5µF
CR4329
R4323 2.2K
+110V (UNREG)
R4235 60K
Q4228
Q4233
R4231 1K
R4324 2.4K
R4127C 550K
C4232 0.22
R4229 10K
R4331 27K
EXT Z AXIS
P4325
J4325
R4001 10K
CR4002
CR4104
R4004 24.3K
Q4002
Q4103
R4005 28.1K
R4003 3.9K
CR4005
R4127D 24.3K
C4003 10µF
R4007 4.7K
CR4004
Q4008
R4013 100K
C4006 47µF
L4006 50µH
+15V (UNREG)
FJ503
T4015
P4009
C4012 0.47
Q14009
R4227 220
R4226 47
CR4311
CR4112
C4107 .01
CRT BIAS
R4109 25K
C4404 1µF
R4108 10K
VR4108 7.5V
R4110 470
C4117 .0012
R4111 1K
CR4122
CR4123
R4112 390K
R4124 22M
R4006 10M
R4007 80V
R4126 10K
C4005 .01
C4010 .01
FOCUS TRACKING
R4059B 2.5M
GANGED WITH INTENSITY R4059A
R4127B 23.5M
C4038 .0012
R4132 5M
FOCUS
R4127A 6.37M
R4008 1.3K
CR4108
DS4124 NE2
DS4125 NE2
C4016 .0068
C4020 .0068
CR4021
R4133 10K
C4025 .0068
R4128 10K
TP4129
C4126 .0012
MESH
P4035
C4037 .01
P4069 100K
GEOM
P4065
R4072 5K
AXIS
C4043 .01
R4042 22K
R4048 1.5K
C4039 .01
R4178 100K
ASTIG
C4036 .01
R4041 100
COMPONENT NUMBER EXAMPLE
Component Number
A23 A2 R1234
Assembly Number
Subassembly Number (if used)
Schematic Circuit Number
Chassis-mounted components have no Assembly Number prefix—see end of Replaceable Electrical Parts List
NUMERAL AND LETTER AT SIGNAL LINES TO OR FROM OTHER DIAGRAMS INDICATES THE GRID COORDINATE ON ANOTHER SCHEMATIC (FOR EXAMPLE: 4E)
Static Sensitive Devices
See Maintenance Section
SEE PARTS LIST FOR SEMICONDUCTOR TYPES.
PARTIAL A4 INTERFACE BOARD

## 465B CONTROL SETTINGS

### DC Voltages

| | |
|---|---|
| A TRIG MODE | NORM (sweep not running) |
| AC-GND-DC (both) | GND |

### AC Waveforms

| | |
|---|---|
| A TRIG MODE | AUTO (no trigger signal) |
| HORIZ DISPLAY | A |
| A TIME/DIV | 1 ms |
| AC-GND-DC (both) | GND |

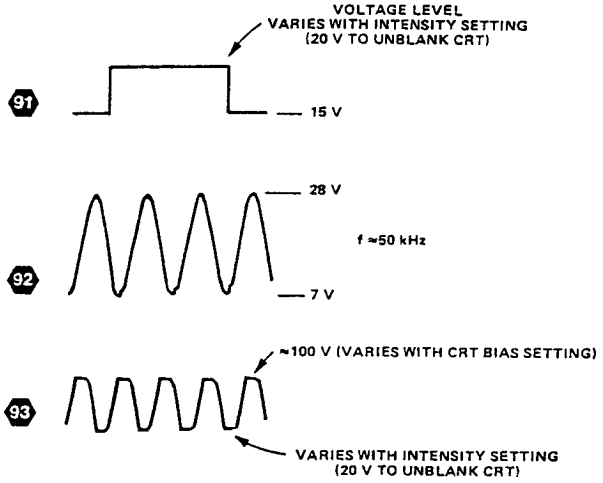


2757-107



## HORIZONTAL AMPLIFIER DIAGRAM 10

**P/O A4 ASSY**

| CIRCUIT NUMBER | SCHEM LOCATION | BOARD LOCATION | CIRCUIT NUMBER | SCHEM LOCATION | BOARD LOCATION | CIRCUIT NUMBER | SCHEM LOCATION | BOARD LOCATION |
|---|---|---|---|---|---|---|---|---|
| C4150 | 1L | 4G | Q4342 | 8L | 6G | R4288 | 6B | 5L |
| C4153 | 1L | 4G | Q4361 | 6K | 6H | R4289 | 6B | 6L |
| C4159 | 2L | 4G | Q4362 | 7J | 6H | R4341 | 7K | 6G |
| C4164 | 1J | 4H | | | | R4342 | 7L | 6G |
| C4175 | 2F | 4I | R4075 | 5H | 2J | R4343 | 7L | 6F |
| C4246 | 1K | 5G | R4142 | 1M | 4F | R4344 | 4L | 7F |
| C4247 | 7K | 5G | R4145 | 1L | 4G | R4345 | 8M | 7G |
| C4262 | 4K | 5H | R4146 | 1K | 4G | R4346 | 6L | 7G |
| C4271 | 6F | 4I | R4158 | 1L | 4G | R4347 | 4D | 7G |
| C4283 | 7B | 5K | R4161 | 1K | 4H | R4351 | 8K | 6G |
| C4285 | 1C | 5K | R4163 | 1J | 4H | R4352 | 8M | 6G |
| C4288 | 6B | 5L | R4165 | 2J | 4H | R4360 | 6I | 6H |
| C4341 | 7L | 6G | R4167 | 2I | 4I | R4361 | 5I | 6H |
| C4351 | 8L | 6G | R4169 | 1J | 4I | R4362 | 7J | 6H |
| C4352 | 7L | 6G | R4172 | 4H | 4I | R4363 | 6J | 6H |
| C4361 | 6J | 6H | R4173 | 1G | 4I | R4364 | 7J | 6H |
| C4362 | 4I | 7H | R4174 | 6G | 4I | R4365 | 3D | 6I |
| C4375 | 1D | 6J | R4175 | 2F | 4I | R4366 | 3D | 6I |
| C4461 | 3D | 7H | R4242 | 1M | 4F | R4367 | 6D | 6I |
| | | | R4244 | 1K | 5G | R4368 | 1E | 6I |
| CR4159 | 2L | 4G | R4245 | 7M | 6F | R4369 | 6E | 7I |
| CR4261A | 6L | 5H | R4250 | 1K | 5G | R4371 | 2B | 6I |
| CR4261B | 6L | 5H | R4253* | 4K | 5G | R4372 | 4D | 6I |
| CR4266 | 3G | 5H | R4254 | 6K | 6G | R4373 | 3F | 6J |
| CR4267 | 3H | 5H | R4260* | 2K | 5H | R4374 | 2D | 6J |
| CR4283 | 1C | 5K | R4262* | 5K | 5H | R4375 | 7G | 6J |
| CR4285 | 2C | 5K | R4263 | 6K | 5H | R4376 | 1E | 6J |
| CR4287 | 3B | 5L | R4265 | 2I | 4H | R4381 | 2B | 6K |
| CR4342 | 8M | 7G | R4266 | 2H | 5H | R4382 | 2B | 6K |
| CR4381 | 2A | 7K | R4267 | 6H | 5H | R4383 | 3B | 6K |
| | | | R4268 | 3H | 5I | R4384 | 2B | 7K |
| J4385 | 2A | 7K | R4270 | 4H | 5I | | | |
| J4487 | 3A | 9K | R4272 | 6F | 5I | RT4373 | 2D | 6J |
| | | | R4273 | 3E | 5J | S4075 | 5H | 2J |
| P4398 | 6A | 7M | R4274 | 3F | 5J | S4371 | 8F | 6J |
| P4571 | 1D | 10I | R4275 | 4E | 5J | | | |
| | | | R4276 | 4F | 5J | U4269A | 5D | 5I |
| Q4146 | 1L | 4F | R4277 | 5E | 5J | U4269B | 2D | 5I |
| Q4150 | 1L | 4G | R4279 | 4F | 6J | U4269C | 6G | 5I |
| Q4161 | 2K | 4H | R4280 | 2C | 5K | U4269D | 2G | 5I |
| Q4169 | 1J | 4I | R4281 | 2C | 5K | U4269E | 4H | 5I |
| Q4273 | 2E | 5I | R4282 | 1D | 5K | | | |
| Q4274 | 6E | 5I | R4283 | 6C | 6K | VR4341 | 3L | 6F |
| Q4284 | 2C | 5K | R4284 | 6C | 6K | | | |
| Q4285 | 3C | 5K | R4285 | 2B | 5K | W4259 | 2K | 5G |
| Q4341 | 7L | 6F | R4286 | 1C | 5L | W4348 | 4B | 7G |
| | | | R4287 | 3B | 5L | W4440 | 4B | 7G |
| | | | | | | W4544 | 5B | 9G |

*P/O A4 ASSY also shown on diagrams 3, 4, 5, 7, 8, 9, 11, 12, and 13* ***See Parts List for serial number ranges.**

**P/O A6 ASSY**

| CIRCUIT NUMBER | SCHEM LOCATION | BOARD LOCATION | CIRCUIT NUMBER | SCHEM LOCATION | BOARD LOCATION | CIRCUIT NUMBER | SCHEM LOCATION | BOARD LOCATION |
|---|---|---|---|---|---|---|---|---|
| P4487 | 7D | 5D | P6001 | 7C | 1B | | | |

*P/O A6 ASSY also shown on diagrams 7, 8, and 9*

**CHASSIS MOUNTED PARTS**

| CIRCUIT NUMBER | SCHEM LOCATION | BOARD LOCATION | CIRCUIT NUMBER | SCHEM LOCATION | BOARD LOCATION | CIRCUIT NUMBER | SCHEM LOCATION | BOARD LOCATION |
|---|---|---|---|---|---|---|---|---|
| DS16001 | 8C | CHASSIS | R14288A | 6A | CHASSIS | R14288B | 6A | CHASSIS |

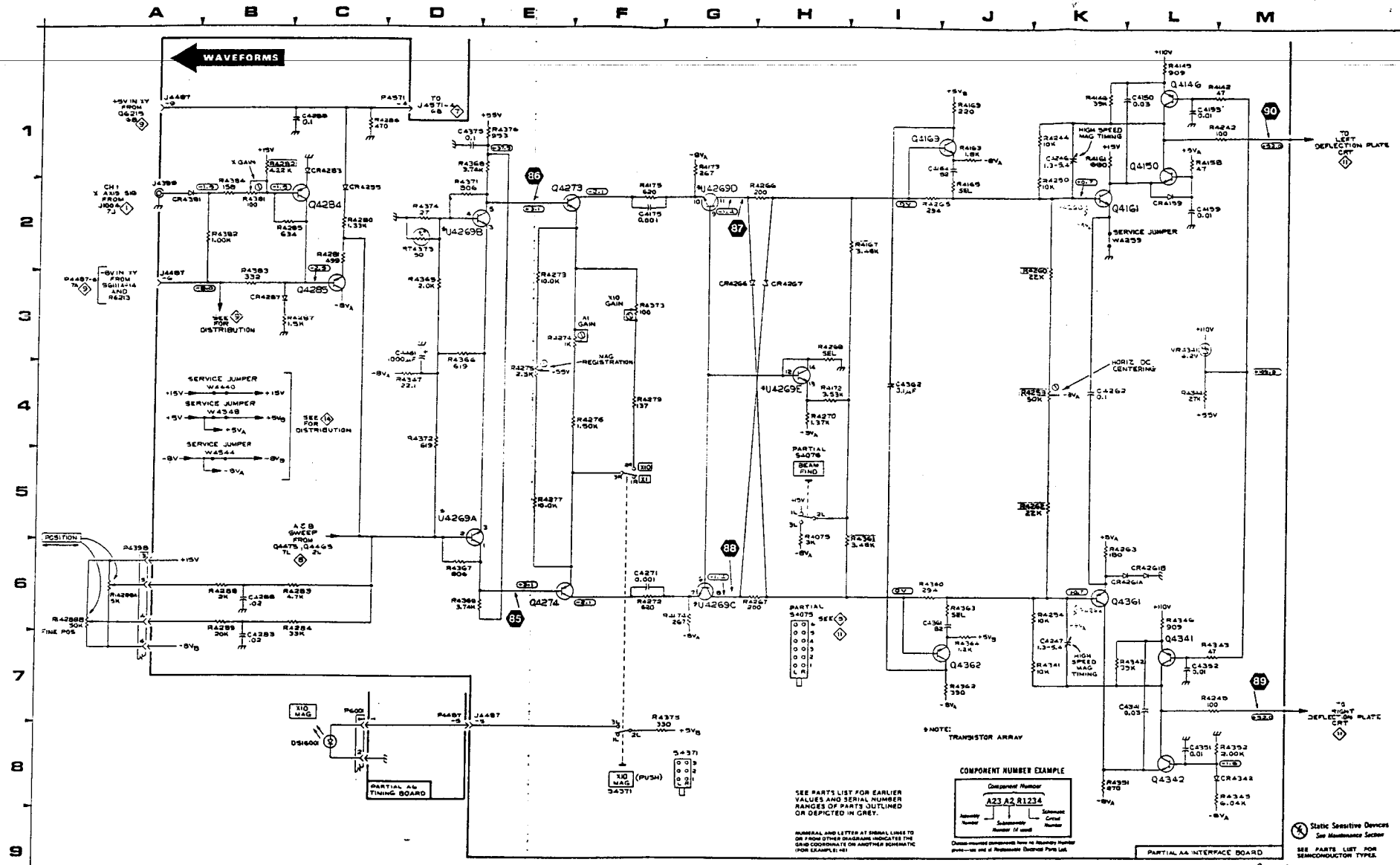
WAVEFORMS
POSITION
FINE POS
X10 MAG
DS1600
P600
PARTIAL A6 TIMING BOARD
ACB SWEEP FROM Q4475, Q4465
SEE FOR DISTRIBUTION
SERVICE JUMPER W4440
SERVICE JUMPER W4548
SERVICE JUMPER W4544
CH1 X AXIS SIG FROM J100A
-8V IN 1Y FROM Sg11A14 AND R6213
+5V IN 1Y FROM Q6215
X GAIN
X10 GAIN
A1 GAIN
MAG REGISTRATION
X10 MAG (PUSH)
BEAM FIND
PARTIAL S4075
TRANSISTOR ARRAY
HIGH SPEED MAG TIMING
SERVICE JUMPER W4259
HORIZ DC CENTERING
TO LEFT DEFLECTION PLATE CRT
TO RIGHT DEFLECTION PLATE CRT
PARTIAL A4 INTERFACE BOARD
COMPONENT NUMBER EXAMPLE
A23 A2 R1234
Static Sensitive Devices
See Maintenance Section
SEE PARTS LIST FOR SEMICONDUCTOR TYPES.
SEE PARTS LIST FOR EARLIER VALUES AND SERIAL NUMBER RANGES OF PARTS OUTLINED OR DEPICTED IN GREY.
NUMERAL AND LETTER AT SIGNAL LINES TO OR FROM OTHER DIAGRAMS INDICATE THE GRID COORDINATE ON ANOTHER SCHEMATIC (FOR EXAMPLE: H1)
4658 OSCILLOSCOPE
2757-84
REV A SEP 1979
HORIZONTAL AMPLIFIER

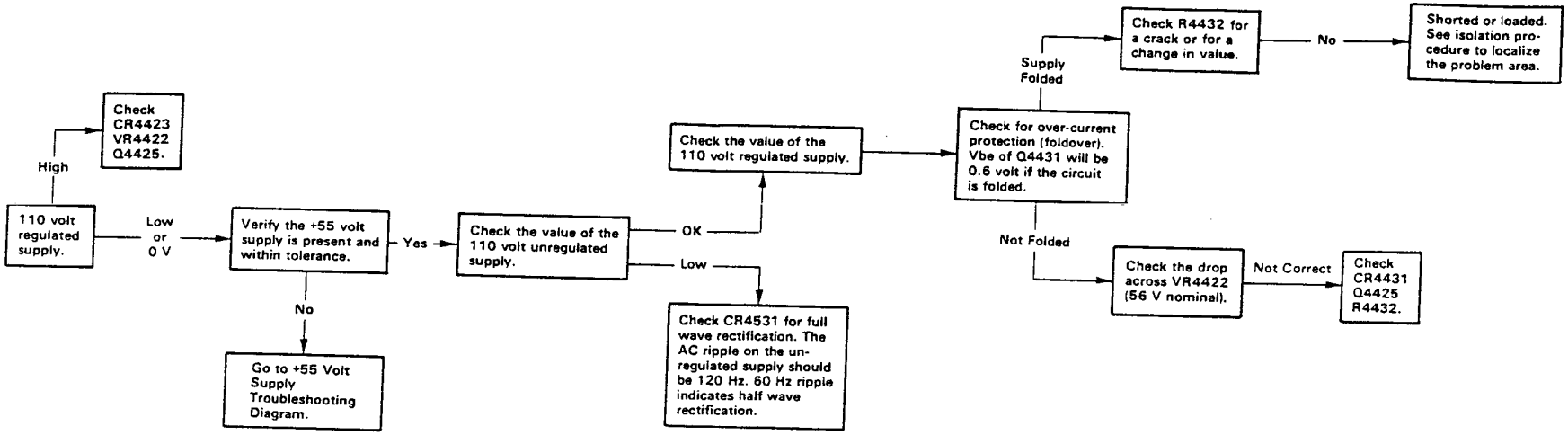


2757-54

+110 V SUPPLY TROUBLESHOOTING

@

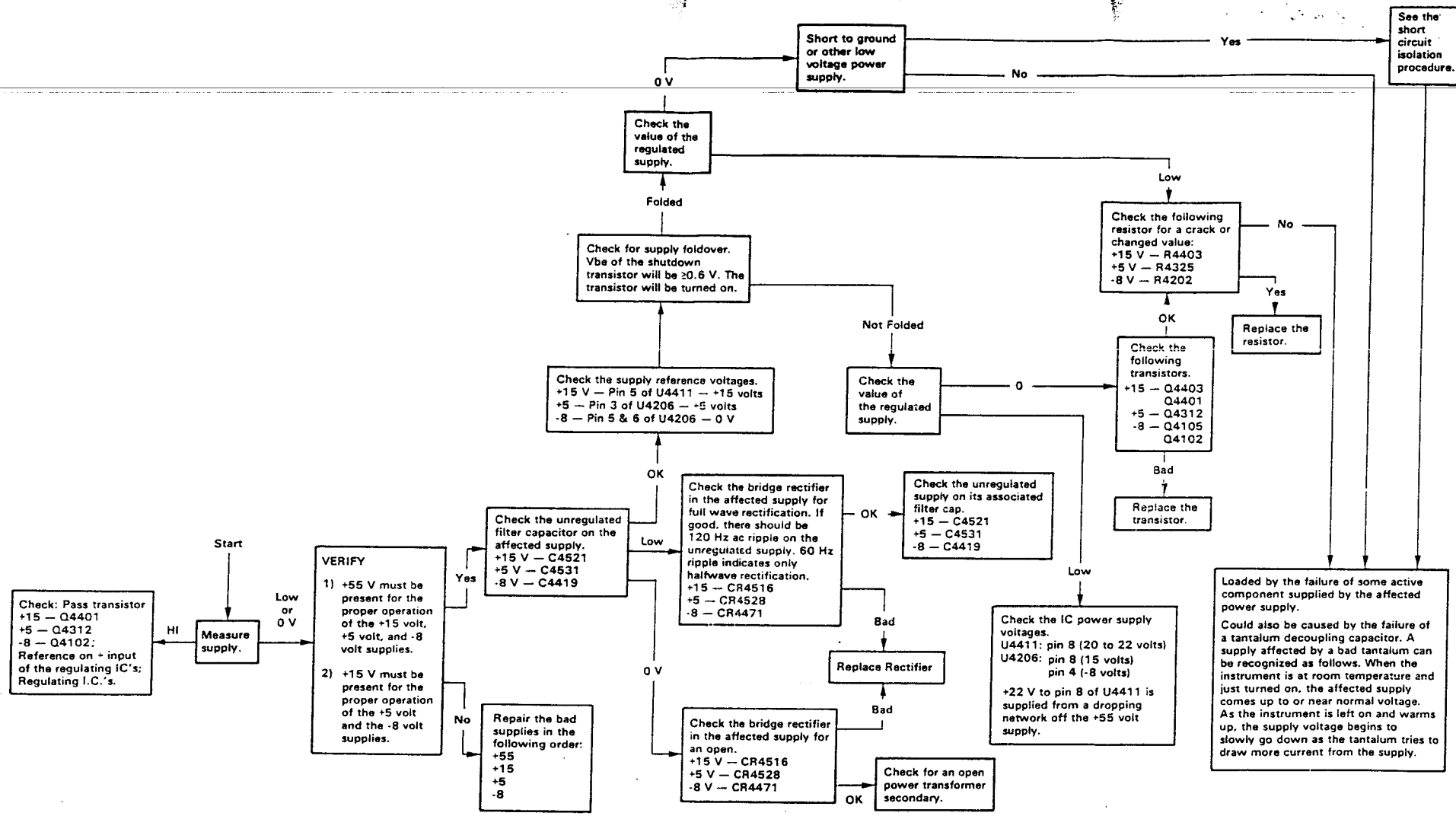
Start
Measure supply.
Hi
Check: Pass transistor
+15 — Q4401
+5 — Q4312
-8 — Q4102;
Reference on + input of the regulating IC's; Regulating I.C.'s.
Low or 0 V
VERIFY
1) +55 V must be present for the proper operation of the +15 volt, +5 volt, and -8 volt supplies.
2) +15 V must be present for the proper operation of the +5 volt and the -8 volt supplies.
Yes
No
Repair the bad supplies in the following order:
+55
+15
+5
-8
Check the unregulated filter capacitor on the affected supply.
+15 V — C4521
+5 V — C4531
-8 V — C4419
Low
0 V
OK
Check the bridge rectifier in the affected supply for full wave rectification. If good, there should be 120 Hz ac ripple on the unregulated supply. 60 Hz ripple indicates only halfwave rectification.
+15 — CR4516
+5 — CR4528
-8 — CR4471
OK
Check the unregulated supply on its associated filter cap.
+15 — C4521
+5 — C4531
-8 — C4419
Bad
Replace Rectifier
Bad
Check the bridge rectifier in the affected supply for an open.
+15 V — CR4516
+5 V — CR4528
-8 V — CR4471
OK
Check for an open power transformer secondary.
Check the supply reference voltages.
+15 V — Pin 5 of U4411 — +15 volts
+5 — Pin 3 of U4206 — +5 volts
-8 — Pin 5 & 6 of U4206 — 0 V
Check for supply foldover. Vbe of the shutdown transistor will be ≥0.6 V. The transistor will be turned on.
Folded
Not Folded
Check the value of the regulated supply.
0 V
Low
Check the IC power supply voltages.
U4411: pin 8 (20 to 22 volts)
U4206: pin 8 (15 volts)
pin 4 (-8 volts)
+22 V to pin 8 of U4411 is supplied from a dropping network off the +55 volt supply.
Check the value of the regulated supply.
Low
Check the following resistor for a crack or changed value:
+15 V — R4403
+5 V — R4325
-8 V — R4202
No
Yes
Replace the resistor.
OK
Check the following transistors.
+15 — Q4403
Q4401
+5 — Q4312
-8 — Q4105
Q4102
Bad
Replace the transistor.
Loaded by the failure of some active component supplied by the affected power supply.
Could also be caused by the failure of a tantalum decoupling capacitor. A supply affected by a bad tantalum can be recognized as follows. When the instrument is at room temperature and just turned on, the affected supply comes up to or near normal voltage. As the instrument is left on and warms up, the supply voltage begins to slowly go down as the tantalum tries to draw more current from the supply.
Short to ground or other low voltage power supply.
Yes
No
See the short circuit isolation procedure.
2757-52

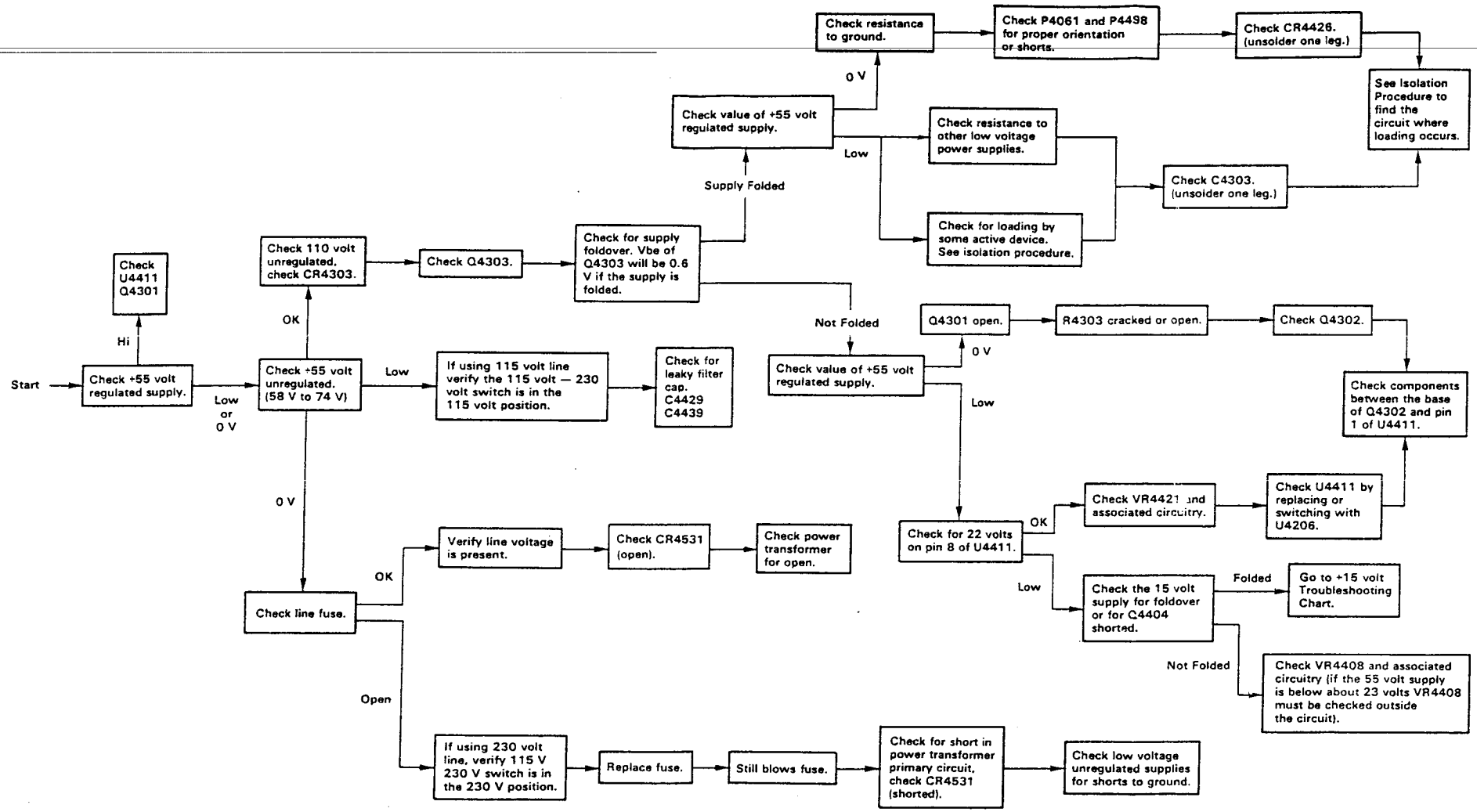


2757-67



+55 V SUPPLY TROUBLESHOOTING

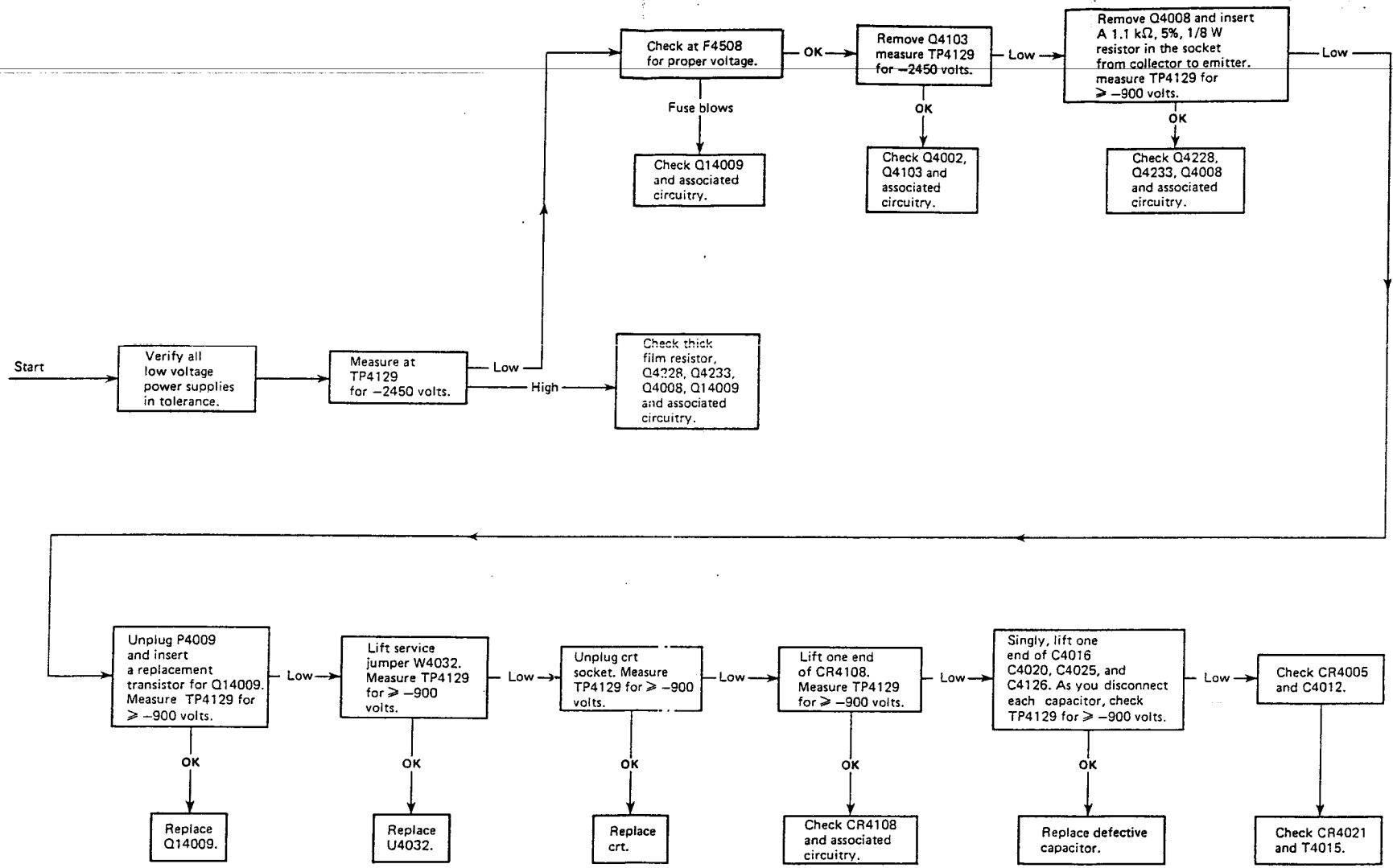
Start
Verify all low voltage power supplies in tolerance.
Measure at TP4129 for −2450 volts.
Low
High
Check thick film resistor, Q4228, Q4233, Q4008, Q14009 and associated circuitry.
Check at F4508 for proper voltage.
OK
Fuse blows
Check Q14009 and associated circuitry.
Remove Q4103 measure TP4129 for −2450 volts.
OK
Check Q4002, Q4103 and associated circuitry.
Low
Remove Q4008 and insert A 1.1 kΩ, 5%, 1/8 W resistor in the socket from collector to emitter. measure TP4129 for ≥ −900 volts.
OK
Check Q4228, Q4233, Q4008 and associated circuitry.
Low
Unplug P4009 and insert a replacement transistor for Q14009. Measure TP4129 for ≥ −900 volts.
OK
Replace Q14009.
Low
Lift service jumper W4032. Measure TP4129 for ≥ −900 volts.
OK
Replace U4032.
Low
Unplug crt socket. Measure TP4129 for ≥ −900 volts.
OK
Replace crt.
Low
Lift one end of CR4108. Measure TP4129 for ≥ −900 volts.
OK
Check CR4108 and associated circuitry.
Low
Singly, lift one end of C4016 C4020, C4025, and C4126. As you disconnect each capacitor, check TP4129 for ≥ −900 volts.
OK
Replace defective capacitor.
Low
Check CR4005 and C4012.
Check CR4021 and T4015.
2757-71

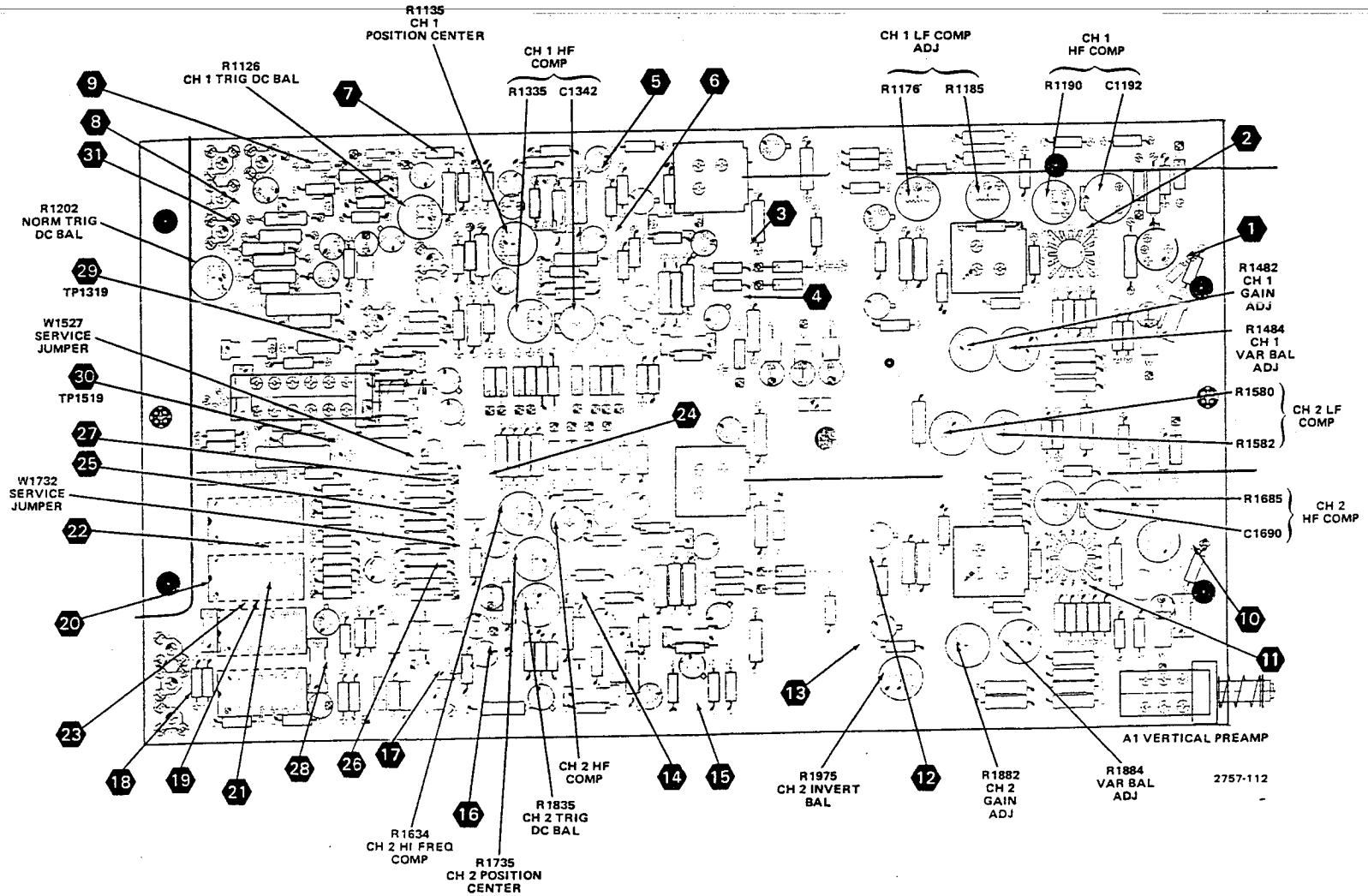


Figure 8-11. Vertical Preamplifier circuit board adjustment locations.

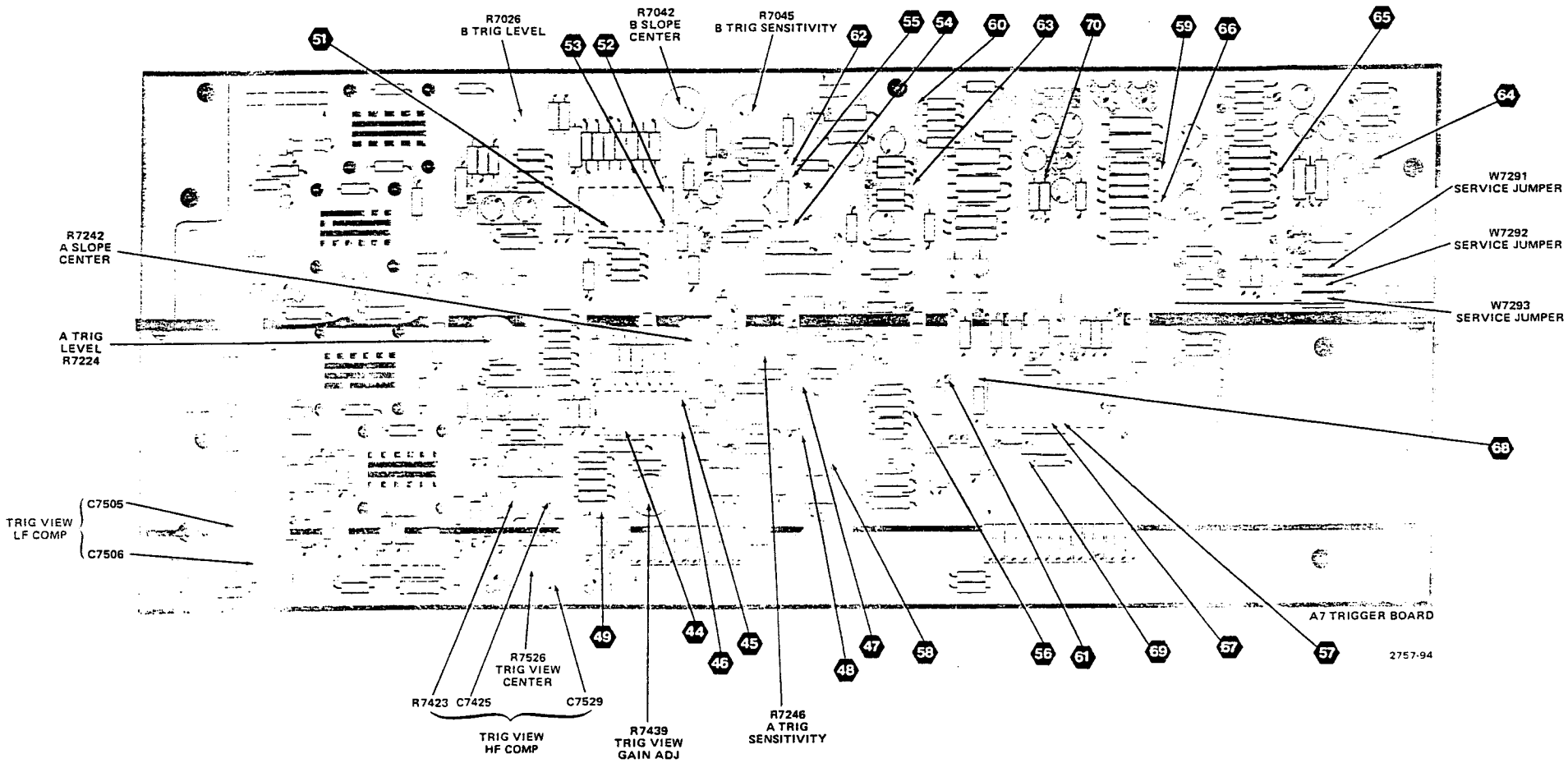


Figure 8-13. Trigger Generator and Sweep Logic circuit board adjustment locations.

FIG. 1 FRONT & REAR

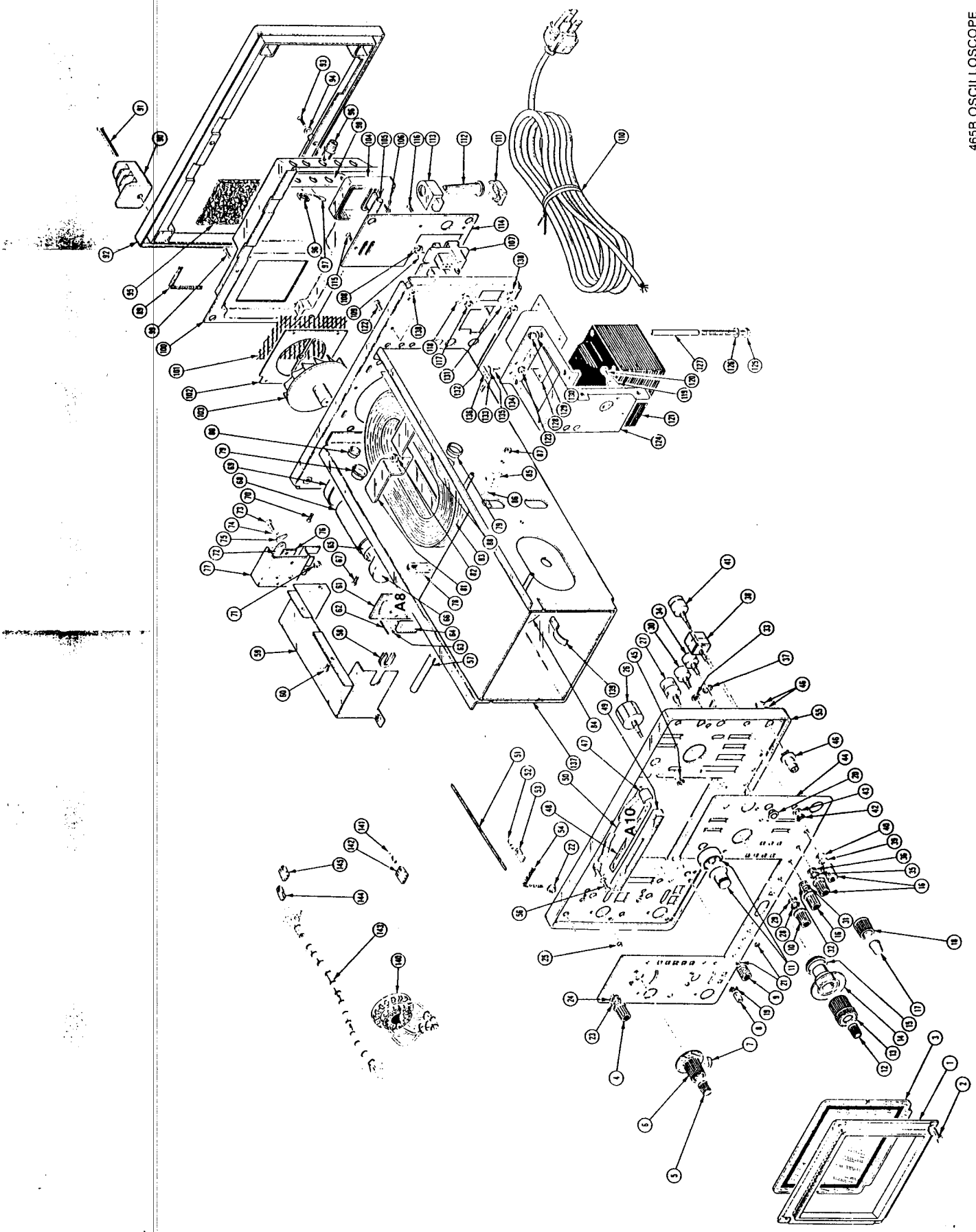

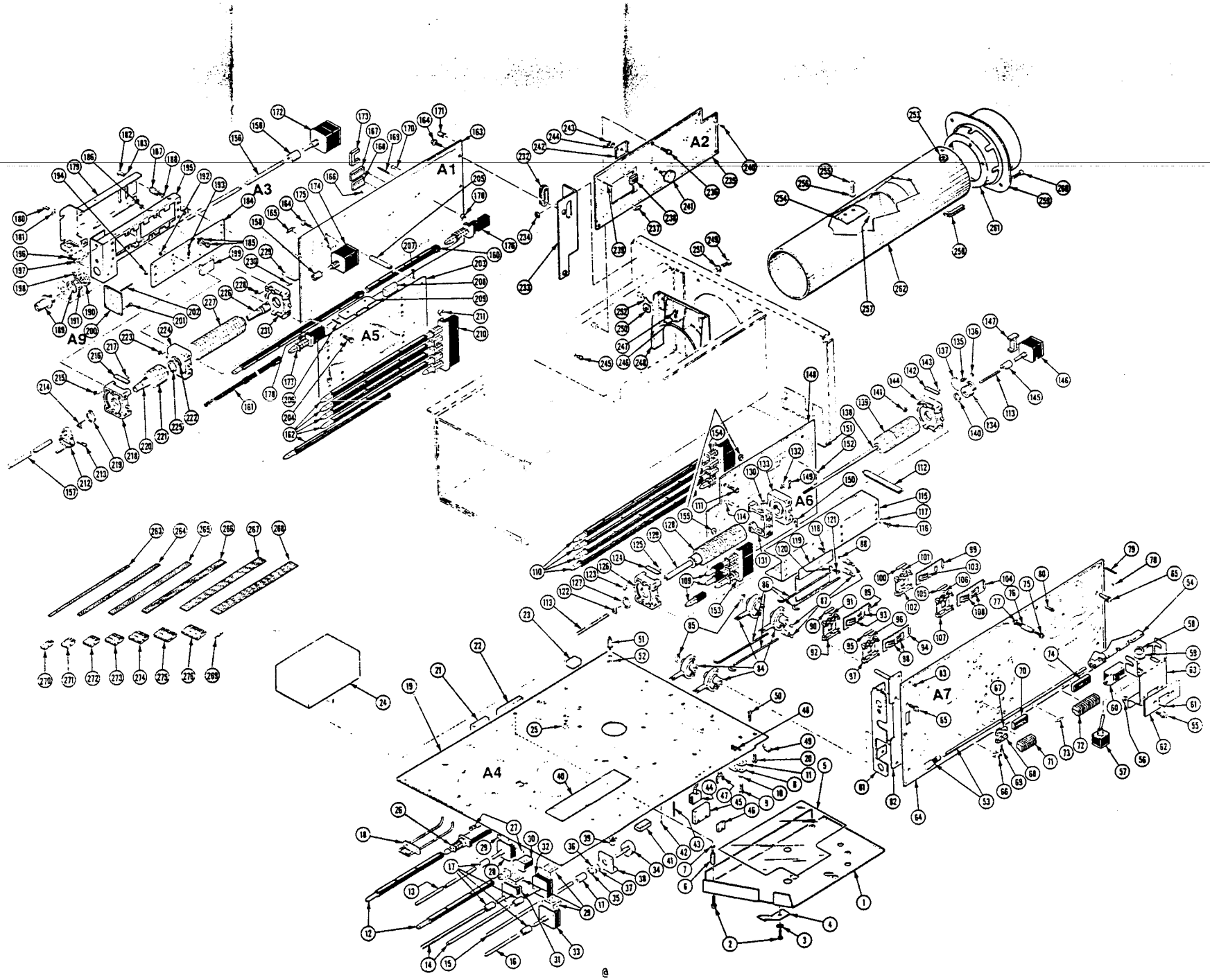
A1
A2
A3
A4
A5
A6
A7
A9

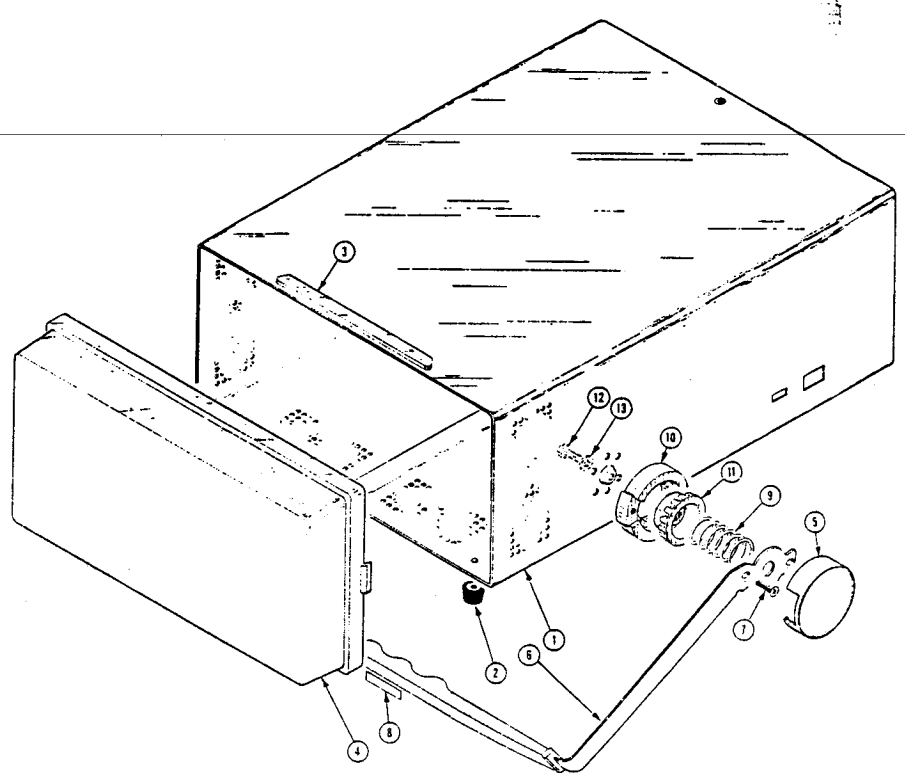

| Fig. & Index No. | Tektronix Part No. | Serial/Model No. Eff | Dscont | Qty 1 2 3 4 5 | Name & Description | Mfr Code | Mfr Part Number |
|---|---|---|---|---|---|---|---|
| 3-1 | 437-0141-02 | | | 1 | CAB,ELEC EQUIP:STANDARD | 80009 | 437-0141-02 |
| | 437-0174-00 | | | 1 | CAB,ELEC EQUIP:WITH DM43/DM40 | 80009 | 437-0174-00 |
| -2 | 348-0080-01 | | | 4 | . FOOT,CABINET:BOTTOM | 80009 | 348-0080-01 |
| -3 | 352-0263-00 | | | 1 | . HLDR,POUCH ASSY:5.5 INCH LONG,PLASTIC | 80009 | 352-0263-0 |
| -4 | 200-1412-00 | | | 1 | COVER,SCOPE:FRONT | 80009 | 200-1412-00 |
| | 200-1723-00 | | | 1 | COVER,SCOPE:FRONT,W/DM43/DM40 | 80009 | 200-1723-00 |
| -5 | 200-0602-00 | | | 2 | COVER,HINGE: | 80009 | 200-0602-00 |
| -6 | 367-0195-00 | | | 1 | HANDLE,CARRYING: | 80009 | 367-0195-00 |
| | | | | | (ATTACHING PARTS) | | |
| -7 | 213-0227-00 | | | 4 | SCR,TPG,THD FOR:6-32 X 0.50 DEG,FLH ST | 83385 | OBD |
| | | | | | - - - * - - - | | |
| -8 | 334-3508-00 | | | 1 | PLATE,IDENT: | 80009 | 334-3508-00 |
| -9 | 214-0516-00 | | | 2 | SPRING,HLCPS:0.959 DIA X 1.250 INCH LONG | 80009 | 214-0516-00 |
| -10 | 214-1987-00 | | | 2 | INDEX,HDL RING: | 80009 | 214-1987-00 |
| -11 | 214-0515-02 | | | 2 | GEAR,HDL INDEX: | 80009 | 214-0515-02 |
| | | | | | (ATTACHING PARTS FOR EACH) | | |
| -12 | 213-0139-00 | | | 1 | SCR,CAP,HEX HD:10-24 X 0.375 INCH LONG | 14438 | OBD |
| -13 | 210-1182-00 | | | 1 | WSHR,SPR TNSN:0.218 ID X 0.69 INCH OD | 80009 | 210-1182-00 |

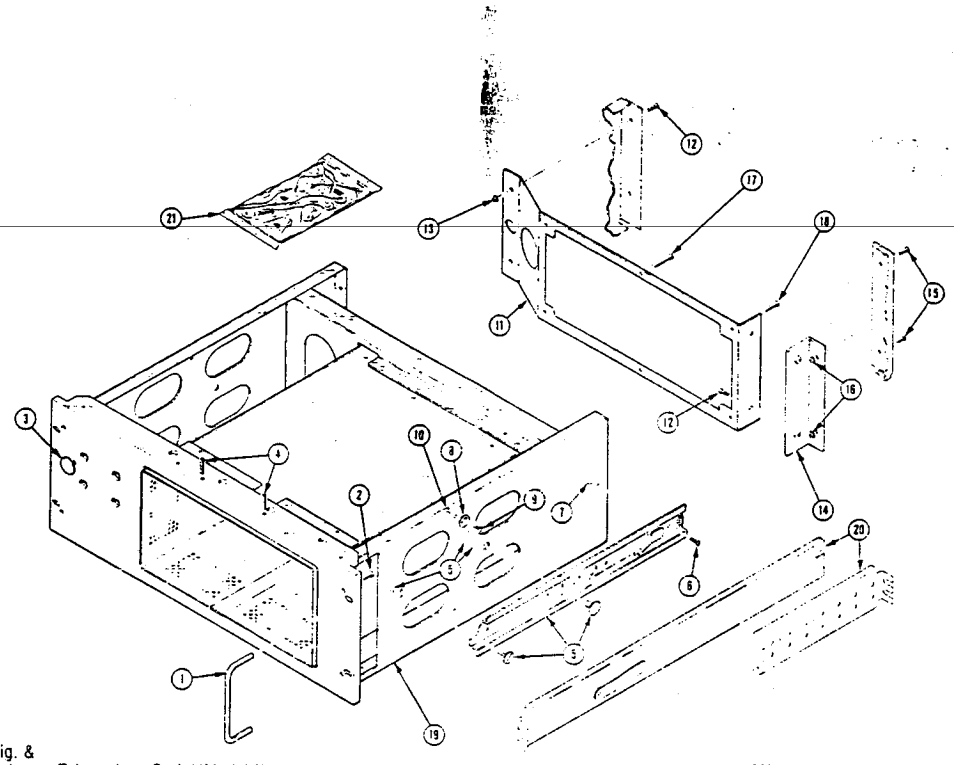

| Fig. & Index No. | Tektronix Part No. | Serial/Model No. Eff | Dscont | Qty 1 2 3 4 5 | Name & Description | Mfr Code | Mfr Part Number |
|---|---|---|---|---|---|---|---|
| 4- | 016-0556-00 | | | 1 | ADPTR,RACK MTG:KIT | 80009 | 016-0556-00 |
| -1 | 367-0022-00 | | | 2 | . HANDLE,BOW:1.5 X 4.5 INCH | 06540 | 10353-B-1032-25A |
| | | | | | (ATTACHING PARTS FOR EACH) | | |
| -2 | 213-0090-00 | | | 2 | . SCREW,MACHINE:10-32 X 0.50 INCH,HEX | 83385 | OBD |
| | | | | | - - - * - - - | | |
| -3 | 134-0067-00 | | | 4 | . BUTTON,PLUG:GRAY PLASTIC | 80009 | 134-0067-00 |
| -4 | 213-0334-00 | | | 2 | . SETSCREW:0.250-28 X 0.750 INCH,SOC STL | 56878 | OBD |
| -5 | 351-0104-00 | | | 1 | . SLIDE SECT.,DWR:PAIR | 06666 | C-720-2 |
| | | | | | (ATTACHING PARTS) | | |
| -6 | 212-0023-00 | | | 2 | . SCREW,MACHINE:8-32 X 0.375 INCH,PNH STL | 83385 | OBD |
| -7 | 210-0458-00 | | | 2 | . NUT,PLAIN,EXT W:8-32 X 0.344 INCH,STL | 83385 | OBD |
| | | | | | - - - * - - - | | |
| -8 | 210-0808-00 | | | 2 | . EYELET,METALLIC:CENTERING | 63743 | 2515113-3TP-909 |
| | | | | | (ATTACHING PARTS FOR EACH) | | |
| -9 | 211-0507-00 | | | 1 | . SCREW,MACHINE:6-32 X 0.312 INCH,PNH STL | 83385 | OBD |
| -10 | 210-0457-00 | | | 1 | . NUT,PLAIN,EXT W:6-32 X 0.312 INCH,STL | 83385 | OBD |
| | | | | | - - - * - - - | | |
| -11 | 386-2669-00 | | | 1 | . SUPPORT,CABINET:REAR | 80009 | 386-2669-00 |
| | | | | | (ATTACHING PARTS) | | |
| -12 | 212-0023-00 | | | 4 | . SCREW,MACHINE:8-32 X 0.375 INCH,PNH STL | 83385 | OBD |
| -13 | 210-0458-00 | | | 2 | . NUT,PLAIN,EXT W:8-32 X 0.344 INCH,STL | 83385 | OBD |
| | | | | | - - - * - - - | | |
| -14 | 407-1350-00 | | | 1 | . BRACKET,ANGLE:REAR | 80009 | 407-1350-00 |
| | | | | | (ATTACHING PARTS) | | |
| -15 | 212-0023-00 | | | 2 | . SCREW,MACHINE:8-32 X 0.375 INCH,PNH STL | 83385 | OBD |
| -16 | 210-0458-00 | | | 2 | . NUT,PLAIN,EXT W:8-32 X 0.344 INCH,STL | 83385 | OBD |
| | | | | | - - - * - - - | | |
| -17 | 211-0517-00 | | | 2 | . SCREW,MACHINE:6-32 X 1 INCH,PNH,STL | 83385 | OBD |
| -18 | 212-0033-00 | | | 4 | . SCREW,MACHINE:8-32 X 0.750 INCH,PNH STL | 83385 | OBD |
| -19 | 437-0154-01 | | | 1 | . CABINET,SCOPE: | 80009 | 437-0154-01 |
| -20 | 351-0101-00 | | | 1 | . SLIDE,DWR,EXT:PAIR | 80009 | 351-0101-00 |
| -21 | 016-0099-00 | | | 1 | . HDW KIT,ELEK EQ: | 80009 | 016-0099-00 |

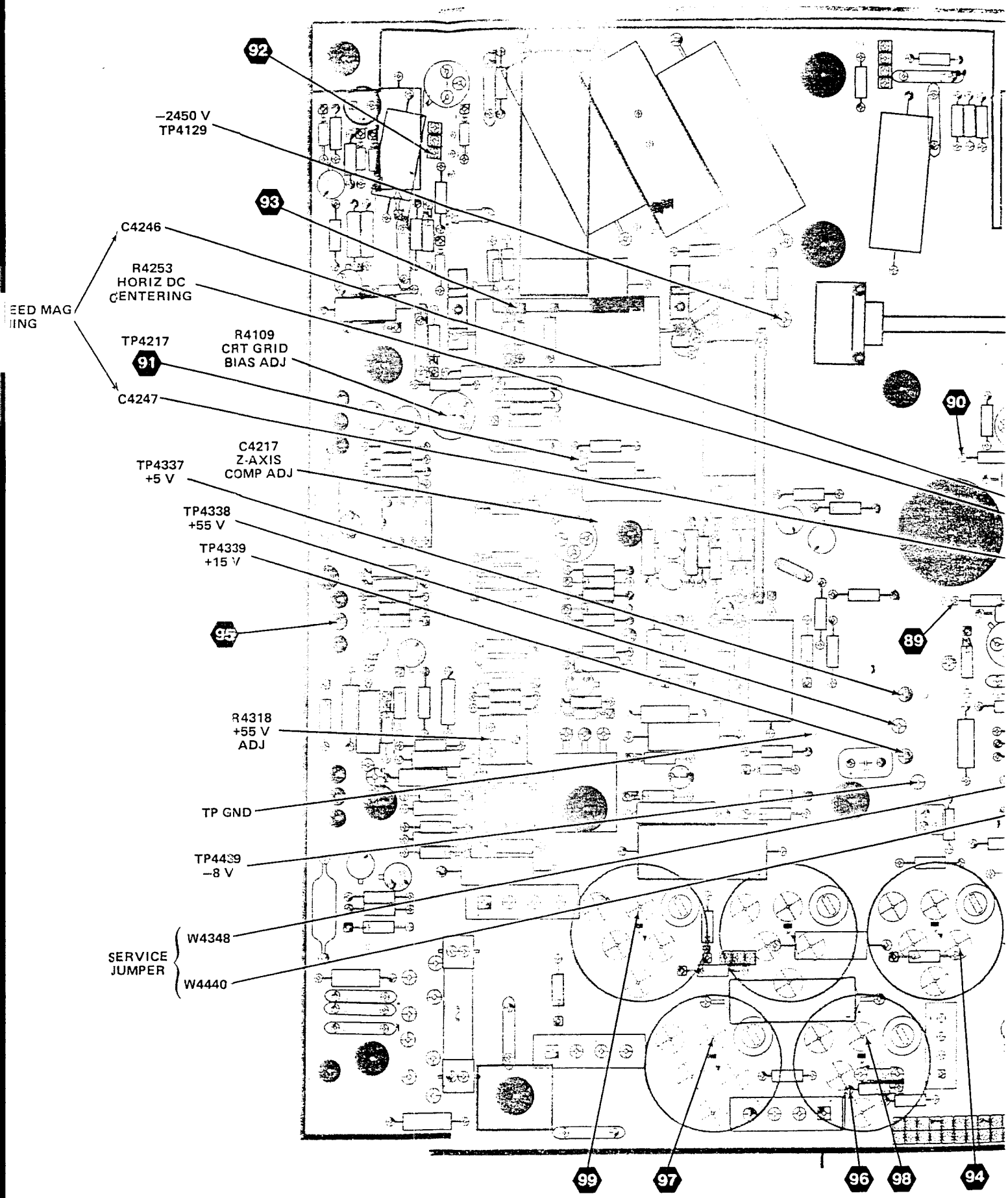


REV A SEP 1979

Figure 8-

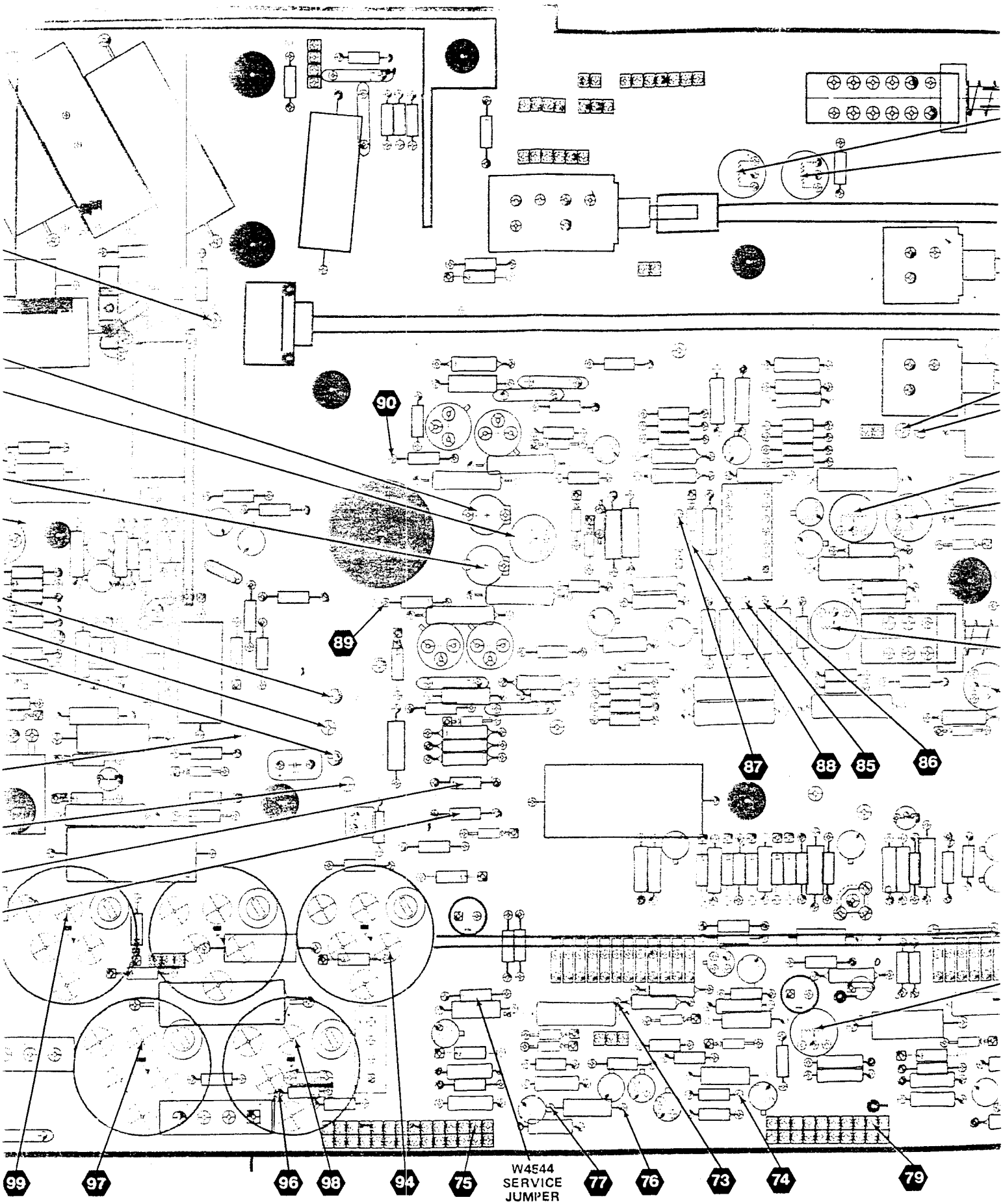


Figure 8-10. Interface circuit board adjustment locations.

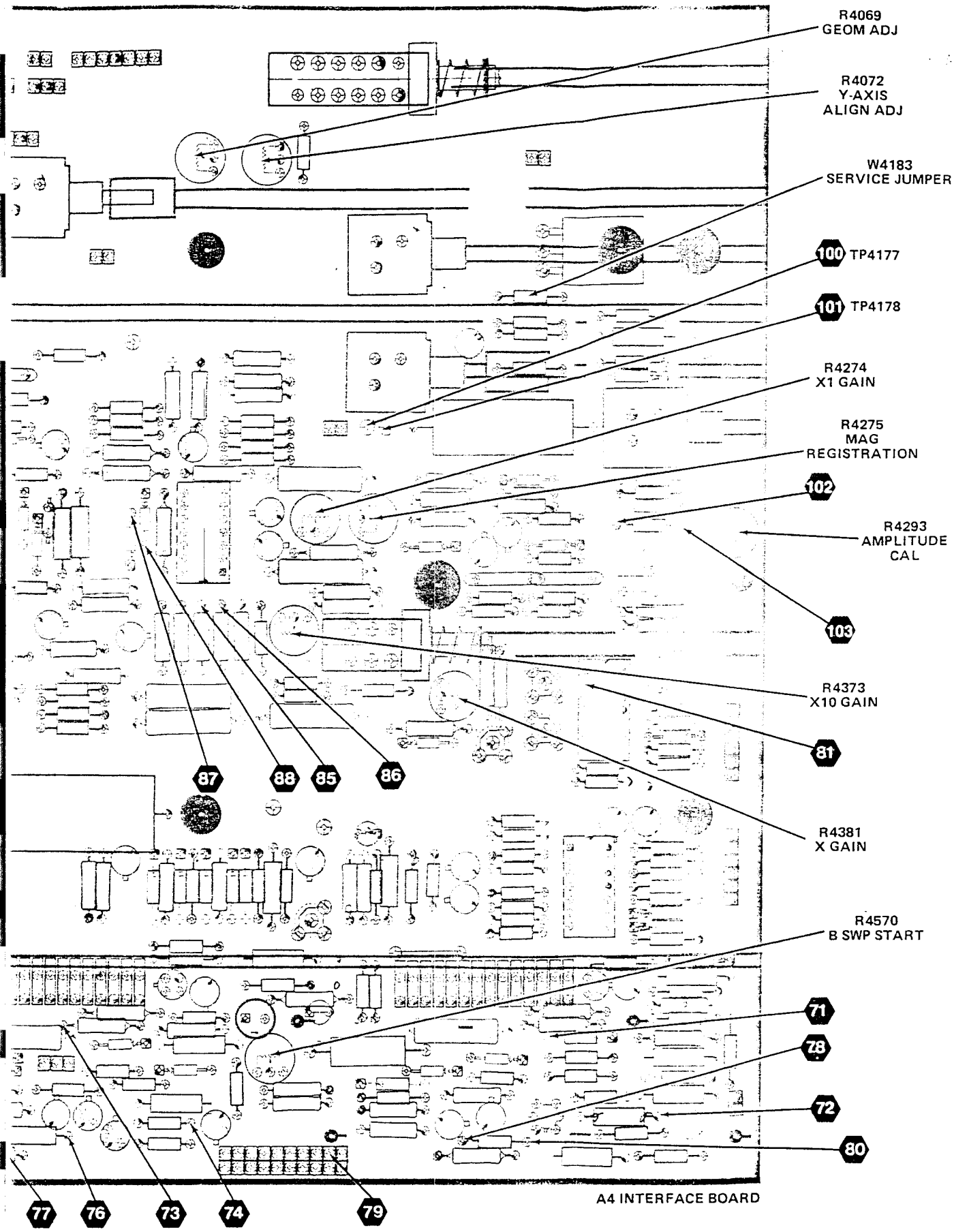


oard adjustment locations.

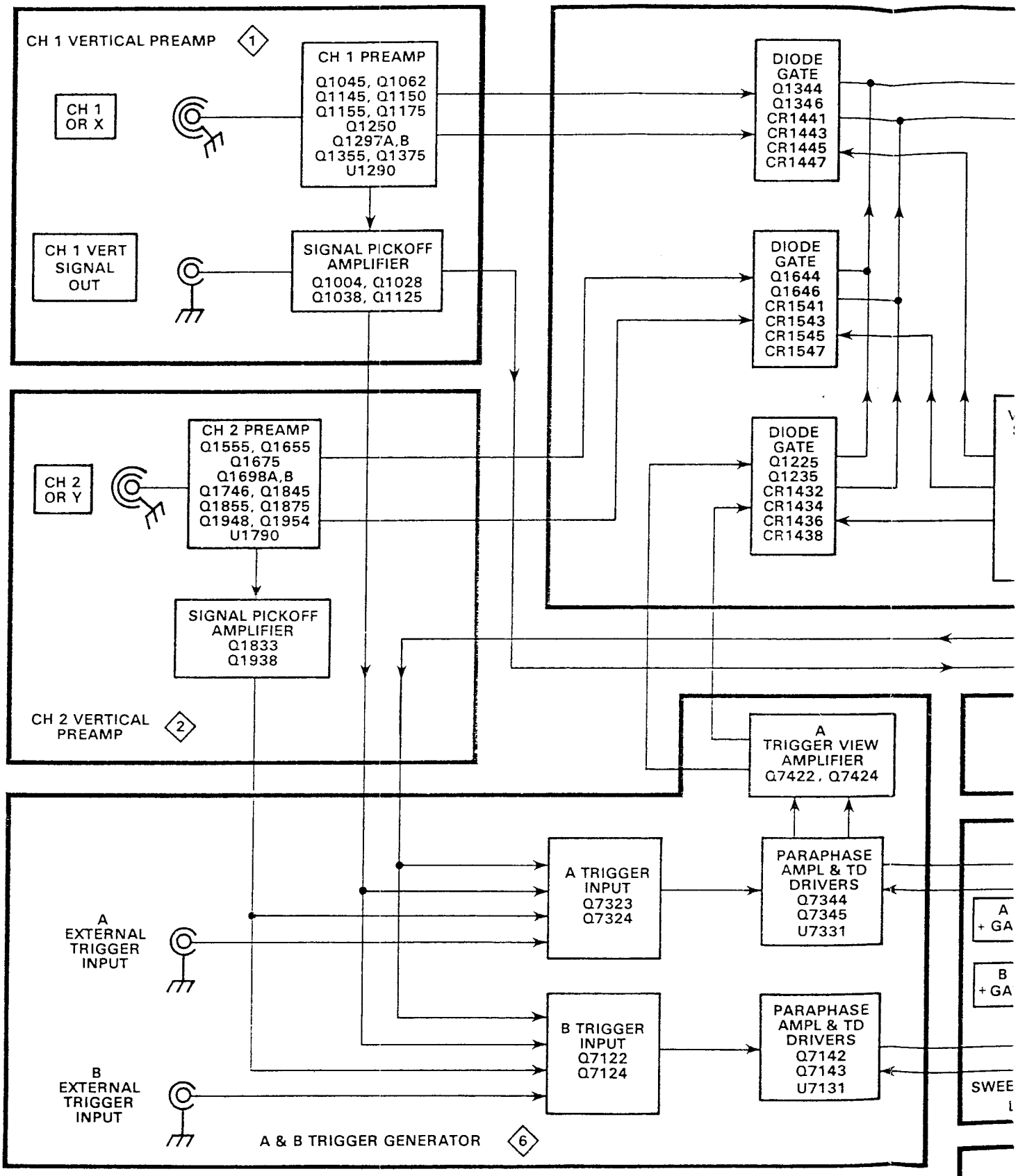
CH 1 VERTICAL PREAMP
1
CH 1 OR X
CH 1 PREAMP
Q1045, Q1062
Q1145, Q1150
Q1155, Q1175
Q1250
Q1297A,B
Q1355, Q1375
U1290
CH 1 VERT SIGNAL OUT
SIGNAL PICKOFF AMPLIFIER
Q1004, Q1028
Q1038, Q1125
DIODE GATE
Q1344
Q1346
CR1441
CR1443
CR1445
CR1447
DIODE GATE
Q1644
Q1646
CR1541
CR1543
CR1545
CR1547
DIODE GATE
Q1225
Q1235
CR1432
CR1434
CR1436
CR1438
CH 2 OR Y
CH 2 PREAMP
Q1555, Q1655
Q1675
Q1698A,B
Q1746, Q1845
Q1855, Q1875
Q1948, Q1954
U1790
SIGNAL PICKOFF AMPLIFIER
Q1833
Q1938
CH 2 VERTICAL PREAMP
2
A TRIGGER VIEW AMPLIFIER
Q7422, Q7424
A TRIGGER INPUT
Q7323
Q7324
PARAPHASE AMPL & TD DRIVERS
Q7344
Q7345
U7331
A EXTERNAL TRIGGER INPUT
B TRIGGER INPUT
Q7122
Q7124
PARAPHASE AMPL & TD DRIVERS
Q7142
Q7143
U7131
B EXTERNAL TRIGGER INPUT
A & B TRIGGER GENERATOR
6

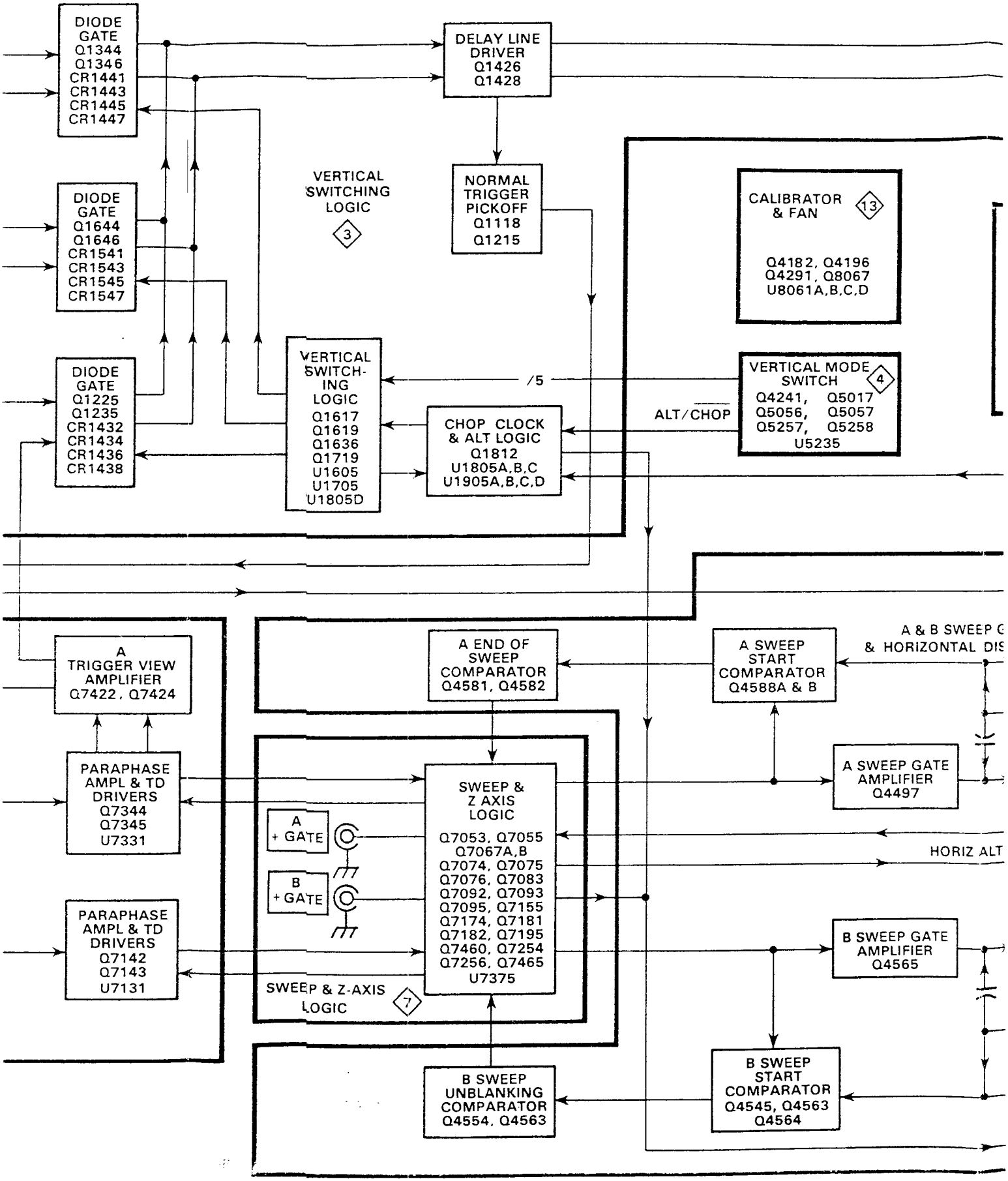
DIODE GATE Q1344 Q1346 CR1441 CR1443 CR1445 CR1447
DIODE GATE Q1644 Q1646 CR1541 CR1543 CR1545 CR1547
DIODE GATE Q1225 Q1235 CR1432 CR1434 CR1436 CR1438
DELAY LINE DRIVER Q1426 Q1428
VERTICAL SWITCHING LOGIC 3
NORMAL TRIGGER PICKOFF Q1118 Q1215
CALIBRATOR & FAN 13
Q4182, Q4196 Q4291, Q8067 U8061A,B,C,D
VERTICAL SWITCHING LOGIC Q1617 Q1619 Q1636 Q1719 U1605 U1705 U1805D
/5
CHOP CLOCK & ALT LOGIC Q1812 U1805A,B,C U1905A,B,C,D
ALT/CHOP
VERTICAL MODE SWITCH 4
Q4241, Q5017 Q5056, Q5057 Q5257, Q5258 U5235
A TRIGGER VIEW AMPLIFIER Q7422, Q7424
PARAPHASE AMPL & TD DRIVERS Q7344 Q7345 U7331
PARAPHASE AMPL & TD DRIVERS Q7142 Q7143 U7131
A END OF SWEEP COMPARATOR Q4581, Q4582
A SWEEP START COMPARATOR Q4588A & B
A & B SWEEP G
& HORIZONTAL DIS
A SWEEP GATE AMPLIFIER Q4497
SWEEP & Z AXIS LOGIC Q7053, Q7055 Q7067A,B Q7074, Q7075 Q7076, Q7083 Q7092, Q7093 Q7095, Q7155 Q7174, Q7181 Q7182, Q7195 Q7460, Q7254 Q7256, Q7465 U7375
A + GATE
B + GATE
HORIZ ALT
SWEEP & Z-AXIS LOGIC 7
B SWEEP GATE AMPLIFIER Q4565
B SWEEP UNBLANKING COMPARATOR Q4554, Q4563
B SWEEP START COMPARATOR Q4545, Q4563 Q4564

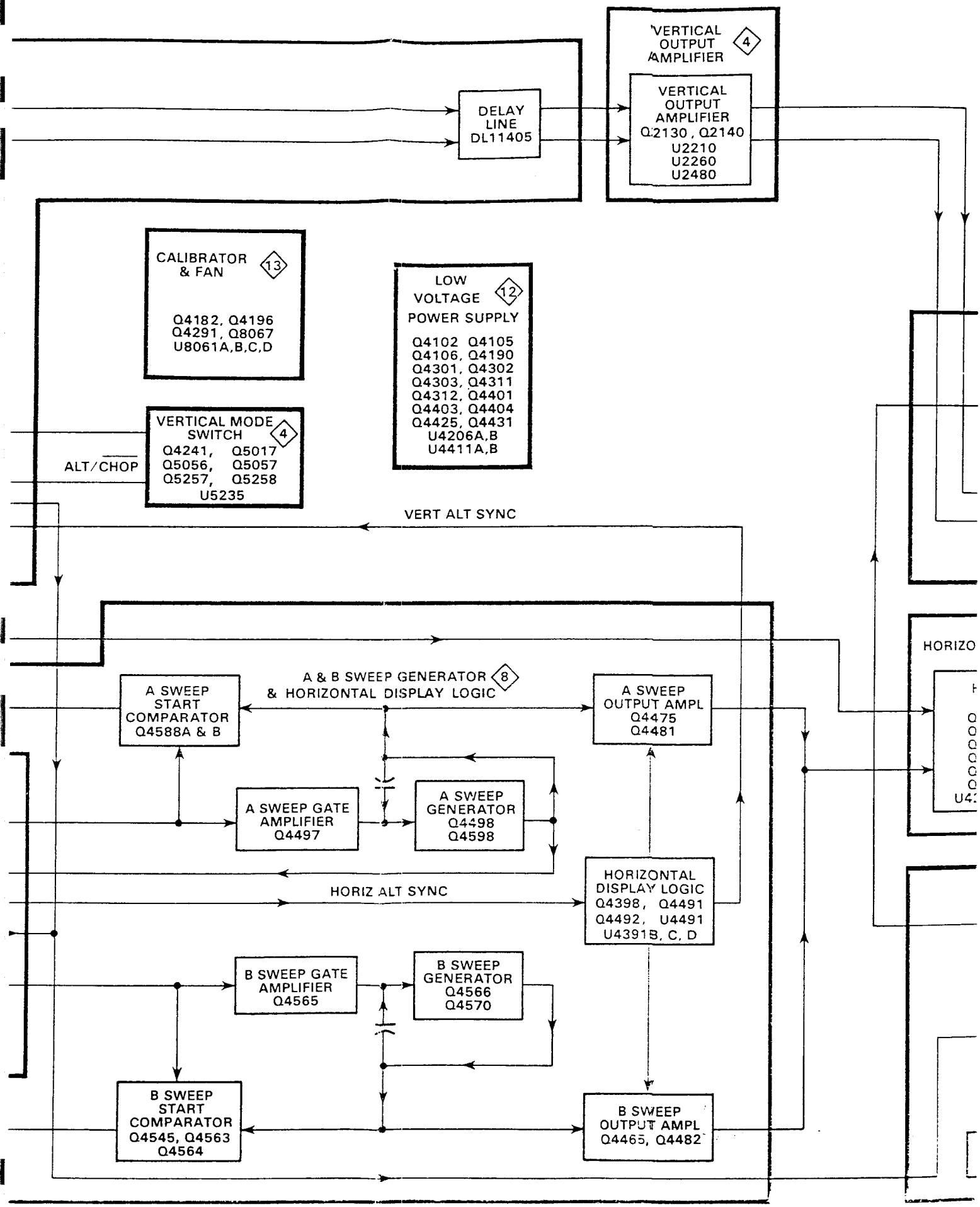
VERTICAL OUTPUT AMPLIFIER 4
VERTICAL OUTPUT AMPLIFIER Q2130, Q2140 U2210 U2260 U2480
DELAY LINE DL11405
CALIBRATOR & FAN 13
Q4182, Q4196 Q4291, Q8067 U8061A,B,C,D
LOW VOLTAGE POWER SUPPLY 12
Q4102 Q4105 Q4106, Q4190 Q4301, Q4302 Q4303, Q4311 Q4312, Q4401 Q4403, Q4404 Q4425, Q4431 U4206A,B U4411A,B
VERTICAL MODE SWITCH 4
Q4241, Q5017 Q5056, Q5057 Q5257, Q5258 U5235
ALT/CHOP
VERT ALT SYNC
A & B SWEEP GENERATOR & HORIZONTAL DISPLAY LOGIC 8
A SWEEP START COMPARATOR Q4588A & B
A SWEEP OUTPUT AMPL Q4475 Q4481
A SWEEP GATE AMPLIFIER Q4497
A SWEEP GENERATOR Q4498 Q4598
HORIZ ALT SYNC
HORIZONTAL DISPLAY LOGIC Q4398, Q4491 Q4492, U4491 U4391B, C, D
B SWEEP GATE AMPLIFIER Q4565
B SWEEP GENERATOR Q4566 Q4570
B SWEEP START COMPARATOR Q4545, Q4563 Q4564
B SWEEP OUTPUT AMPL Q4465, Q4482

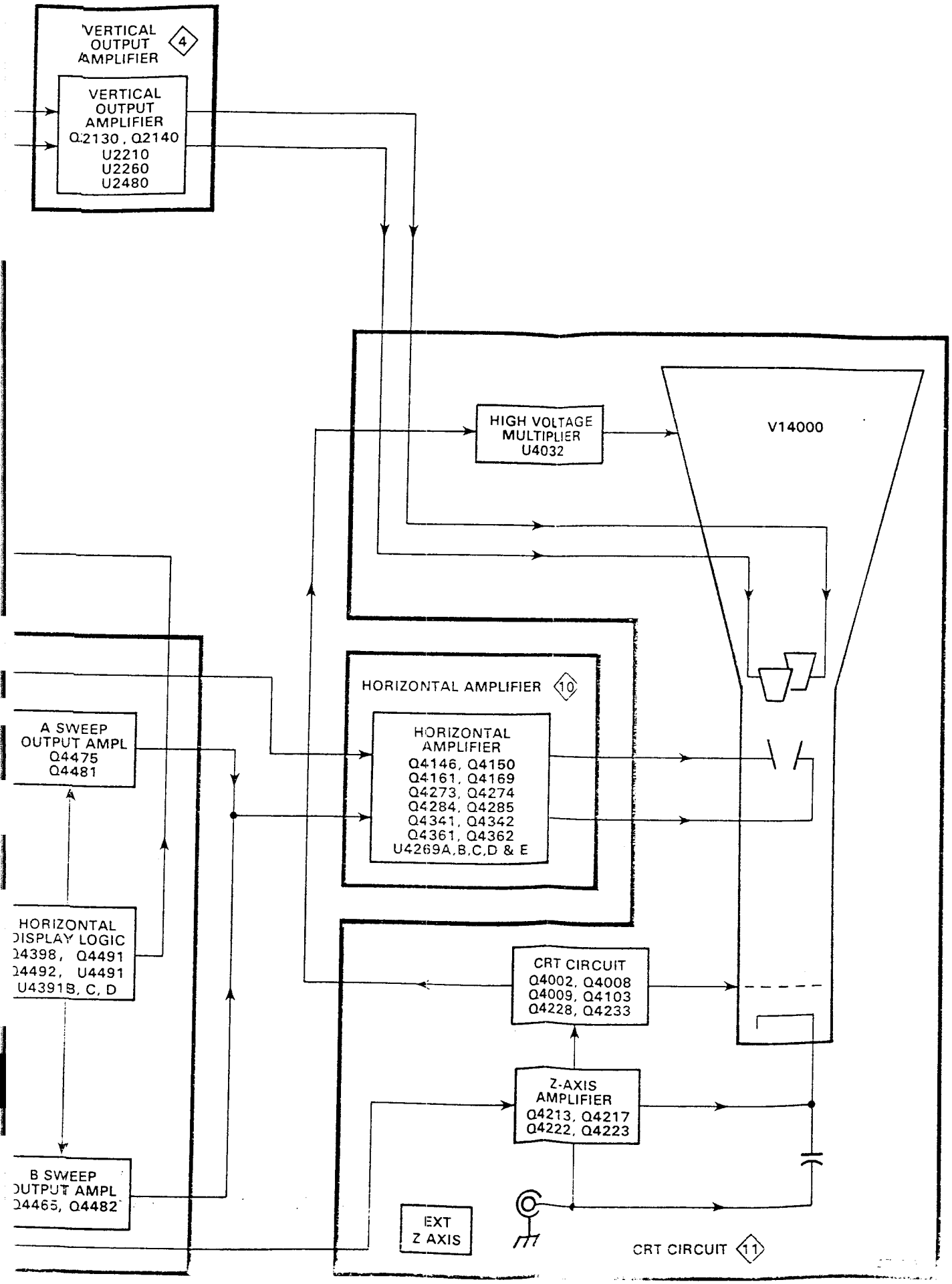


4658 BLOCK DIAGRAM