TEKTRONIX®

465 OSCILLOSCOPE

SERVICE

INSTRUCTION MANUAL

Tektronix, Inc.
P.O. Box 500
Beaverton, Oregon 97005

Serial Number _____

070-1330-00

1272

WARRANTY

All TEKTRONIX instruments are warranted against defective materials and workmanship for one year. Any questions with respect to the warranty should be taken up with your TEKTRONIX Field Engineer or representative.

All requests for repairs and replacement parts should be directed to the TEKTRONIX Field Office or representative in your area. This will assure you the fastest possible service. Please include the instrument Type Number or Part Number and Serial Number with all requests for parts or service.

Specifications and price change privileges reserved.

Copyright © 1972 by Tektronix, Inc., Beaverton, Oregon. Printed in the United States of America. All rights reserved. Contents of this publication may not be reproduced in any form without permission of Tektronix, Inc.

U.S.A. and foreign TEKTRONIX products covered by U.S. and foreign patents and/or patents pending.

TEKTRONIX is a registered trademark of Tektronix, Inc.

TABLE OF CONTENTS

		Page
SECTION 1	465 SPECIFICATIONS	
	Introduction	1-1
	Vertical Deflection System	1-1
	Triggering	1-1
	Horizontal Deflection System	1-2
	X-Y Operation	1-3
	Calibrator	1-3
	Z Axis Input	1-3
	Signal Outputs	1-3
	Power Source	1-3
	Cathode-Ray Tube	1-3
	Supplemental Information	
	General	1-3
	Vertical Deflection System	1-3
	Triggering	1-4
	Horizontal Deflection System	1-4
	Calibrator	1-4
	External Z Axis Input	1-4
	Output Signals	1-4
	Cathode-Ray Tube	1-4
SECTION 2	OPERATING INFORMATION	
	Introduction	2-1
	Instrument Repackaging	2-1
	Operating Voltage	2-1
	Controls And Connectors	
	General	2-2
	Cathode-Ray Tube (CRT) and Display	2-2
	Vertical Deflection System	2-2
	A and B Triggering	2-4
	A and B Sweep	2-5
	Calibrator and Power	2-6
	Rear Panel	2-6
	Obtaining Basic Displays	
	Introduction	2-6
	Normal Sweep Display	2-6
	Magnified Sweep Display	2-7
	Delayed Sweep Display	2-7
	Mixed Sweep Display	2-7
	X-Y Display	2-7
SECTION 3	CIRCUIT DESCRIPTION	
	Introduction	3-1
	Digital Logic	3-1
	Block Diagram	
	General	3-1
	Channel 1 Preamp	
	General	3-3
	Input Coupling	3-3
	Input Attenuator	3-4
	Scale-Factor Switching Circuit	3-4
	Source Follower Stage	3-4
	First Cascode Amplifier Stage	3-4
	Second Cascode Amplifier Stage	3-4

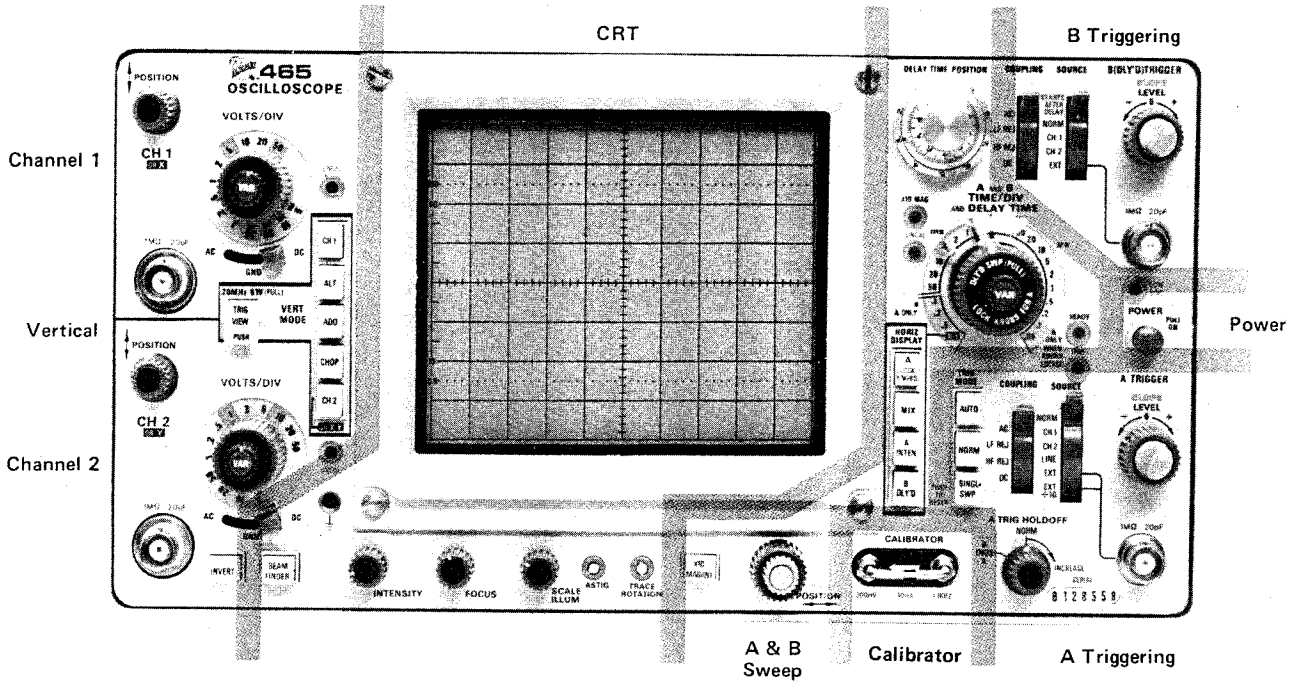

A. Front panel.

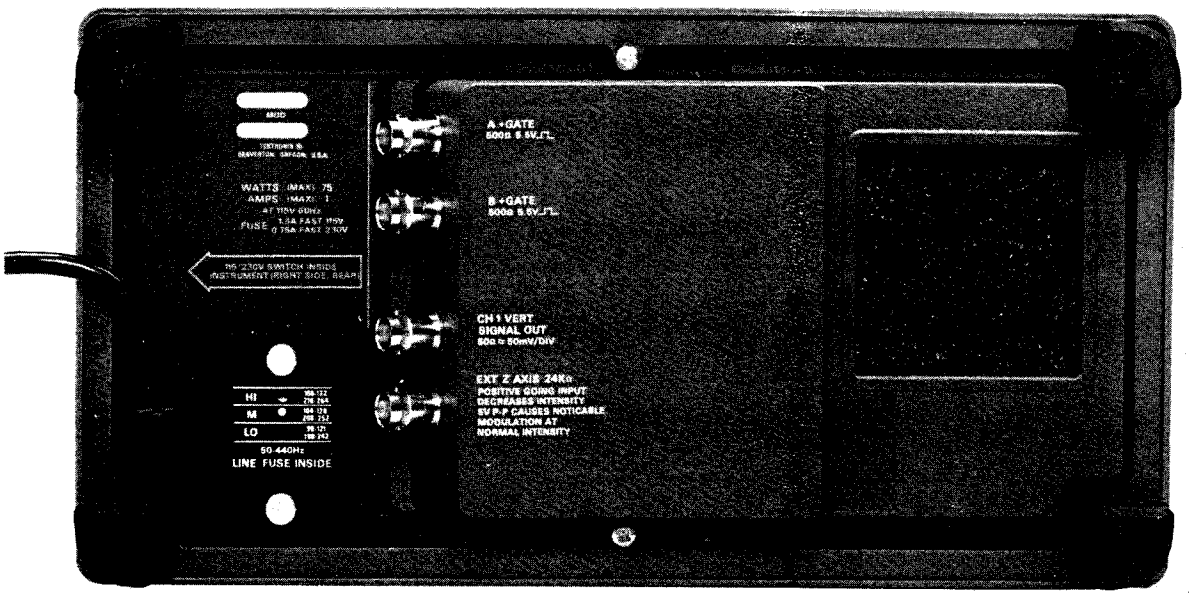

B. Rear panel.

Fig. 2-2. Front- and rear-panel controls and connectors.

DC: All components of the input signal are passed to the Vertical Amplifier.

20 MHz BW/TRIG VIEW — Dual-purpose switch that, when pulled out, limits the bandwidth of the complete Vertical Deflection System to approximately 20 MHz, or when pressed causes signal present in A Trigger Generator circuit to be displayed on the CRT.

INVERT — Pushbutton switch that inverts the Channel 2 display.

VERT MODE — Selects the vertical mode of operation.

CH 1: Displays Channel 1 only.

ALT: Dual-trace display of signals on both channels. Display is switched between channels at the end of each sweep.

ADD: Signals applied to the CH 1 OR X and CH 2 OR Y connectors are algebraically added and the sum is displayed on the CRT. The INVERT switch in Channel 2 allows the display to be CH 1 + CH 2 or CH 1 – CH 2.

CHOP: Dual-trace display of signals on both channels. Display is switched between channels at an approximate repetition rate of 250 kHz.

CH 2 OR X-Y: Displays Channel 2 only. Must be pushed when operating in X-Y mode.

A and B Triggering (both where applicable)

COUPLING — Determines the method used to couple signal to input of trigger circuits.

AC: Rejects DC and attenuates signals below about 60 Hz. Accepts signals above about 60 Hz.

LF REJ: Rejects DC and attenuates signals below about 50 kHz. Accepts signals above about 50 kHz.

HF REJ: Accepts signals between 60 Hz and 50 kHz. Rejects DC and attenuates all signals outside the above range.

DC: Accepts all trigger signals from DC to 100 MHz or greater.

SOURCE — Selects source of trigger signal.

NORM: Internal trigger signal obtained from Vertical Deflection System. Actual source is signal(s) displayed on CRT.

CH 1: A sample of the signal connected to the CH 1 OR X input connector is used as a trigger signal.

CH 2: A sample of the signal connected to the CH 2 OR Y input connector is used as a trigger signal.

EXT: Trigger signal is obtained from signal connected to the External Trigger Input connector.

EXT ÷10 (A trigger circuit only): External trigger signal is attenuated by a factor of 10.

STARTS AFTER DELAY (B trigger circuit only): B sweep starts immediately after the delay time selected by the DELAY-TIME POSITION dial and the DELAY-TIME switch.

LINE (A trigger circuit only): Trigger signal is obtained from a sample of the line voltage applied to the instrument.

SLOPE — Selects the slope of the trigger signal which starts the sweep.

+: Sweep can be triggered from the positive-going portion of the trigger signal.

–: Sweep can be triggered from the negative-going portion of the trigger signal.

LEVEL — Selects the amplitude point on the trigger signal at which the sweep is triggered.

A TRIG MODE

Determines the operating mode for the A Trigger Circuit.

AUTO: With the proper trigger control settings, A Sweep can be initiated by signals that have repetition rates above about 20 hertz and are within the frequency range selected by the COUPLING switch. In the absence of an adequate trigger signal or when the trigger controls are misadjusted, the sweep free-runs to produce a reference trace.

NORM: With the proper trigger control settings, A Sweep can be initiated by signals that are within the frequency range selected by the COUPLING switch. In the absence of an adequate trigger signal or when the trigger controls are misadjusted, there is no trace.

SING SWP: After a sweep is displayed, further sweeps cannot be presented until the SING SWP pushbutton is pressed again. The display is triggered the same as for NORM operation using the A Triggering controls.

A TRIG HOLDOFF

Provides control of holdoff time between sweeps to obtain stable displays when triggering on aperiodic signals (such as complex digital words). Variable can increase holdoff time up to at least 10 times the holdoff time of the NORM position. In the B ENDS A position (fully clockwise), the A sweep is reset at the end of the B sweep to provide the fastest possible sweep repetition rate for delayed sweep presentations.

External Trigger Input (not labeled)

Input connectors for external trigger signals.

A and B Sweep

DELAY-TIME POSITION

Provides variable sweep delay between 0.20 and 10.20 times the delay time indicated by the DELAY TIME switch.

A AND B TIME/DIV AND DELAY TIME

A TIME/DIV switch (clear plastic outer flange) selects the sweep rate of the A sweep circuit and selects the basic delay time (to be multiplied by DELAY-TIME POSITION dial setting) for delayed-sweep operation. B TIME/DIV switch (inner dark knob) selects sweep rate of the B sweep circuit for delayed sweep operation only. VAR control must be in calibrated detent for calibrated A sweep rates.

VAR

Provides continuously variable A sweep rates between the calibrated settings of the A TIME/DIV switch. The A sweep rate is calibrated when the VAR control is fully clockwise into the calibrated detent.

UNCAL

Light that indicates when the VAR TIME/DIV control is out of the calibrated detent and the horizontal sweep rate is uncalibrated.

X10 MAG Indicator

Light that indicates when the X10 MAG is turned on.

READY

Light that indicates that A Sweep has been prepared to present a single sweep upon receipt of an adequate trigger signal.

HORIZ DISPLAY

Selects the horizontal mode of operation.

A: Horizontal deflection provided by A Sweep. B Sweep inoperative.

MIX: The first part of the horizontal sweep is displayed at a rate set by the A TIME/DIV switch and the latter part of the sweep at a rate set by the B TIME/DIV switch. Relative amounts of the display allocated to each of the two rates are determined by the setting of the DELAY-TIME POSITION dial.

A INT: Displayed sweep rate determined by the A TIME/DIV switch. An intensified portion appears on the display during the B sweep time. This switch position provides a check of the duration and position of the B sweep (delayed sweep) with respect to the delaying sweep (A).

	B DLYD: Sweep rate determined by the B TIME/DIV switch with the delay time determined by the setting of the DELAY TIME (A TIME/DIV) switch and the DELAY-TIME POSITION dial.
Horizontal POSITION	Positions the display horizontally.
X10 MAG	Increases the displayed sweep rate by a factor of 10.

Calibrator and Power

CALIBRATOR	A combination current loop and square-wave voltage output device. Provides a 30 mA square-wave current, 300 mV square-wave voltage signal with a repetition rate of approximately 1 kHz.
POWER	Turns instrument power on and off.
LOW LINE	Light that indicates the applied line voltage is below the lower limit of the regulating range selected by the Regulating Range Selector assembly.

Rear Panel

A +GATE	Output connector providing a positive-going rectangular pulse coincident with the A sweep time.
B +GATE	Output connector providing a positive-going rectangular pulse coincident with the B sweep time.
CH 1 VERT SIGNAL OUT	Output connector providing a sample of the signal applied to the CH 1 input connector.
EXT Z AXIS INPUT	Input connector for intensity modulation of the CRT display.
Regulating Range Selector	Selects the regulating range of the internal power supplies (low, medium, high; determined by specific line voltage applied to instrument).

OBTAINING BASIC DISPLAYS

Introduction

The following instructions will allow the operator who is unfamiliar with the operation of the 465 to obtain the basic displays commonly used. Before proceeding with these instructions, preset the instrument controls as follows:

Vertical Controls

VERT MODE Switch	CH 1
VOLTS/DIV Switches	Proper position determined by amplitude of signal to be applied.
VOLTS/DIV VAR Controls	Calibrated detent
Input Coupling Switches	AC
Vertical POSITION Controls	Midrange
20 MHz BW Switch	Not limited
INVERT Switch	Button out
INTENSITY Control	Fully counterclockwise
FOCUS Control	Midrange
SCALE ILLUM Control	Midrange

Trigger Controls (both A and B if applicable)

SLOPE Switch	+
LEVEL Control	0
SOURCE Switch	NORM
COUPLING Switch	AC
TRIG MODE Switch	AUTO
A TRIG HOLDOFF Control	NORM

Horizontal Sweep Controls

TIME/DIV Switches	Locked together at 1 ms
A TIME/DIV VAR	Calibrated detent
HORIZ DISPLAY Switch	A
X10 MAG Switch	Off (button out)
POSITION Control	Midrange

Normal Sweep Display

1. Set the POWER switch to on (button out). Allow several minutes for instrument warmup.

2. Connect the external signal to the CH 1 input connector.

3. Advance the INTENSITY control until the display is visible. If the display is not visible with the INTENSITY control at midrange, press the BEAM FIND pushbutton and adjust the CH 1 VOLTS/DIV switch until the display is reduced in size vertically. Then, center the compressed display with the vertical and horizontal POSITION controls, and release the BEAM FIND pushbutton. Adjust the FOCUS control for a well-defined display.

4. Set the CH 1 VOLTS/DIV switch and CH 1 POSITION control for a display which remains in the display area vertically.

5. Adjust the A Trigger LEVEL control for a stable display.

6. Set the A TIME/DIV switch and the horizontal POSITION control for a display which remains in the display area horizontally.

Magnified Sweep Display

1. Preset the instrument controls and follow steps 1 through 6 for obtaining a Normal Sweep Display.

2. Adjust the horizontal POSITION control to move the area to be magnified to within the center graticule division of the CRT. If necessary, change the TIME/DIV switch setting so the complete area to be magnified is within the center division.

3. Set the X10 MAG switch to the on position (button in) and adjust the horizontal POSITION control for precise positioning of the magnified display.

Delayed Sweep Displays

1. Preset the instrument controls and follow steps 1 through 6 for obtaining a Normal Sweep Display.

2. Set the HORIZ DISPLAY switch to A INT and the B Trigger SOURCE switch to STARTS AFTER DELAY.

3. Pull out the B TIME/DIV switch knob and turn clockwise so the intensified zone on the display is the desired length. Adjust the INTENSITY control to achieve the desired display brightness.

4. Adjust the DELAY-TIME POSITION dial to position the intensified zone to the portion of the display to be delayed.

5. Set the HORIZ DISPLAY switch to B DLYD. The intensified zone on the display noted in step 3 is now being displayed in delay form. The delayed sweep rate is indicated by the dot on the B TIME/DIV switch knob.

6. For a delayed sweep display that will exhibit less jitter, set the B Trigger SOURCE switch to the same position as the A Trigger SOURCE switch and adjust the B Trigger LEVEL control for a stable display. If the A Trigger SOURCE switch is in the LINE position, a sample of the line voltage will have to be supplied to the B Trigger circuit externally.

Mixed Sweep Display

1. Preset the instrument controls and follow steps 1 through 6 for obtaining a Normal Sweep Display.

2. Pull out on the B TIME/DIV switch knob and turn clockwise to the desired sweep rate. Adjust the INTENSITY control to achieve the desired display brightness.

3. Set the HORIZ DISPLAY switch to MIX. The CRT display now contains more than one time factor on the horizontal axis. The first portion of the display is at the A Time Base sweep rate and the latter part is at the B Time Base sweep rate. The start of the B Time Base portion of the display can be changed by adjusting the DELAY-TIME POSITION control.

X-Y Display

1. Preset the instrument controls and turn the instrument power on. Allow several minutes for instrument warm-up.

2. Set the TIME/DIV switch to X-Y and the VERT MODE to CH 2. Apply the vertical signal to the CH 2 or Y input connector and the horizontal signal to the CH 1 or X input connector. The CH 2 POSITION control will provide vertical positioning and the Horizontal POSITION control will provide horizontal positioning.

3. Advance the INTENSITY control until the display is visible. If the display is not visible with the INTENSITY control at midrange, press the BEAM FIND pushbutton and adjust the CH 1 and CH 2 VOLTS/DIV switches until the display is reduced in size both vertically and horizontally. Then, center the compressed display with the vertical POSITION controls, and release the BEAM FIND pushbutton. Adjust the FOCUS control for a well-defined display.

CIRCUIT DESCRIPTION

Introduction

This section of the manual contains a description of the circuitry used in the 465 Oscilloscope. The description begins with a discussion of the instrument, using the basic block diagram shown in Fig. 3-1. Then, each circuit is described in detail using detailed block diagrams to show the interconnections between the stages in each major circuit and the relationship of the front panel controls to the individual stages.

A complete block diagram is located in the Diagrams Section at the back of this manual. This block diagram shows the overall relationship between all of the circuits. Complete schematics of each circuit are also given in the Diagrams Section. Refer to these diagrams throughout the following circuit description for electrical values and relationships.

Digital Logic

Digital logic techniques are used to perform many functions within this instrument. The function and operation of the logic circuits are described using logic symbology and terminology. All logic functions are described using the positive logic convention. Positive logic is a system of notation where the more positive of two levels (HI) is called the true or 1 state; the more negative level (LO) is called the false or 0 state. The HI-LO method of notation is used in this logic description. The specific voltages which constitute a HI or LO state vary between individual devices. Typical HI and LO logic levels are shown on the diagrams at the rear of this manual.

It should be noted that not all of the integrated circuit devices in this instrument are digital logic devices. The function of non-digital devices will be described individually using operating waveforms or other techniques to illustrate their function.

BLOCK DIAGRAM

General

The following discussion is provided to aid in understanding the overall concept of the 465 Oscilloscope before the individual circuits are discussed in detail. A basic block diagram of the 465 Oscilloscope is shown in Fig. 3-1. Only the basic interconnections between the individual blocks are shown on this diagram. Each block represents a major circuit within the instrument. The number on each block refers to the complete circuit diagram which is located at the rear of this manual.

Signals to be displayed on the CRT are applied to the CH 1 OR X and/or CH 2 OR Y connectors. The input signals are then amplified by the Preamp circuits. Each Preamp circuit includes separate vertical deflection factor, input coupling, balance, gain, and variable attenuation controls. A trigger pickoff stage in each Vertical Preamp circuit supplies a sample of the channel signals to the Trigger Generator circuit. A sample of the Channel 1 signal is also supplied to the CH 1 VERT SIGNAL OUT BNC connector on the instrument rear panel. In the X-Y mode of operation the Channel 1 signal is connected to the input of the Horizontal Amplifier circuit to provide the X-Axis deflection. The Channel 2 Vertical Preamp circuit contains an invert feature to invert the Channel 2 signal as displayed on the CRT. The output of both Vertical Preamp circuits is connected to the Vertical Switching circuit. This circuit selects the channel(s) to be displayed. An output signal from this circuit is connected to the Z Axis Amplifier circuit to blank out the switching transients between channels when in the chopped mode of operation. A trigger pickoff stage at the output of the Vertical Switching circuit provides a sample of the displayed signal(s) to the Trigger Generator circuit.

The output of the Vertical Switching circuit is connected to the Vertical Output Amplifier through the Delay Line. The Vertical Output Amplifier circuit provides the final amplification for the signal before it is connected to the vertical deflection plates of the CRT. This circuit includes the BEAM FIND switch which compresses the vertical and horizontal deflection to within the viewing area to aid in locating an off-screen display.

The A and B Trigger Generator circuits produce an output pulse which initiates the sweep signal produced by the A or B Sweep Generator circuits. The input signal to the A and B Trigger Generator circuits can be individually selected from the Channel 1 signal, Channel 2 signal, the signal(s) displayed on the CRT, a signal connected to the external trigger input connectors, or a sample of the line

voltage applied to the instrument. Each trigger circuit contains level, slope, coupling, and source controls.

The A Sweep Generator circuit, when initiated by the A Trigger Generator circuit, produces a linear sawtooth output signal, the slope of which is controlled by the A TIME/DIV switch. The TRIG MODE switch controls the operating mode of the A Sweep Generator circuit. In the AUTO position, the absence of an adequate trigger signal causes the sweep to free run. In the NORM position, a horizontal sweep is presented only when correctly triggered by an adequate trigger signal. Pushing the SING SWP pushbutton allows one (and only one) sweep to be initiated. The Z Axis Logic circuit produces an unblanking gate signal to unblank the CRT so that the display can be presented. This gate signal is coincident with the sawtooth produced by the A Sweep Generator circuit. A gate signal, which is also coincident with the sawtooth, is available at the A + GATE connector on the instrument rear panel. The Z Axis Logic circuit also produces an alternate sync pulse which is connected to the Vertical Switching circuit. This pulse switches the display between channels at the end of each sweep when the VERT MODE switch is in the ALT position.

The B Sweep Generator circuit is basically the same as the A Sweep Generator circuit. However, this circuit only produces a sawtooth output signal after a delay time determined by the A TIME/DIV switch and the DELAY TIME POSITION dial. If the B Triggering SOURCE switch is set to the STARTS AFTER DELAY position, the B Sweep Generator begins to produce the sweep immediately following the selected delay time. If this switch is in one of the remaining positions, the B Sweep Generator circuit does not produce a sweep until it receives a trigger pulse occurring after the selected delay time.

The output of either the A or B Sweep Generator is amplified by the Horizontal Amplifier circuit to produce horizontal deflection for the CRT except in the fully counterclockwise (X-Y) position of the TIME/DIV switch. This circuit contains a 10X magnifier to increase the sweep rate 10 times in any A or B TIME/DIV switch position. Other horizontal deflection signals can be connected to the horizontal amplifier by using the X-Y mode of operation. When the TIME/DIV switch is set to X-Y, the X signal is connected to the Horizontal Amplifier circuit through the Channel 1 Vertical Preamp circuit.

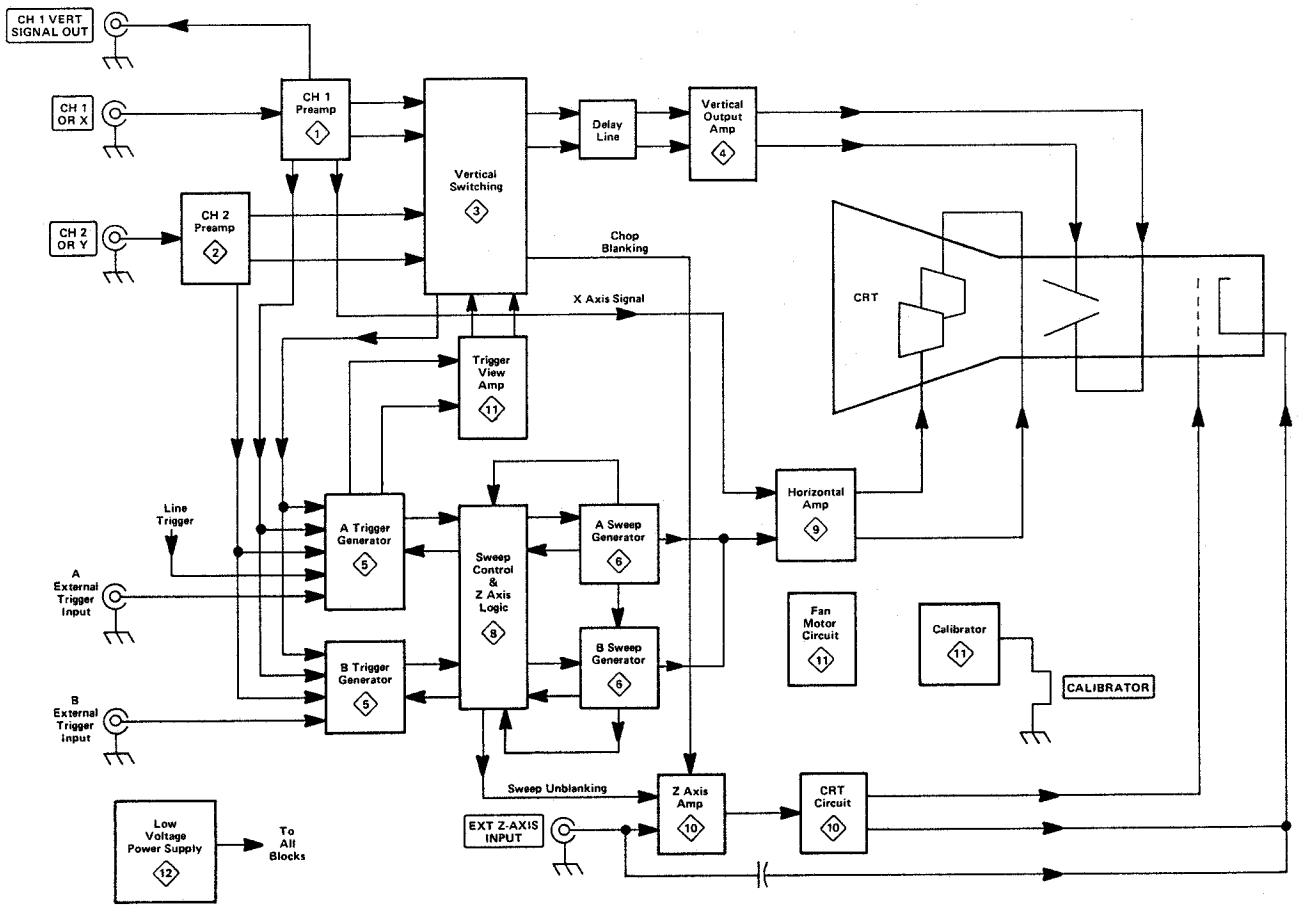

Fig. 3-1. Basic block diagram of the 465.

The Z Axis Amplifier circuit determines the CRT intensity and blanking. The Z Axis Amplifier circuit sums the current inputs from the INTENSITY control, Vertical Switching circuit (chopped blanking), Z Axis Logic circuit (unblanking), and the external Z AXIS INPUT connector. The output level of the Z Axis Amplifier circuit controls the trace intensity through the CRT Circuit. The CRT circuit provides the voltages and contains the controls necessary for operation of the cathode-ray tube.

The Power Supply circuit provides the low voltage power necessary for operation of this instrument. This voltage is distributed to all of the circuits in the instrument as shown by the Power Distribution Diagram. The Calibrator circuit produces a square-wave output with accurate voltage and current amplitudes which can be used to check the calibration of the instrument and the compensation of probes. The CALIBRATOR current loop provides an accurate current source for calibration of current measuring probe systems.

CHANNEL 1 PREAMP

General

Input signals for vertical deflection on the CRT can be connected to the CH 1 OR X input connector. In the X-Y mode of operation the input signal connected to the CH 1 OR X connector provides the horizontal (X axis) deflection (TIME/DIV switch set to X-Y, VERT MODE switch set to CH 2 OR X-Y). The Channel 1 Preamp circuit provides control of input coupling, vertical deflection factor, gain, and DC balance. Fig. 3-2 shows a detailed block diagram of the Channel 1 Preamp circuit. A schematic of this circuit is shown on Diagram 1 at the rear of the manual.

Input Coupling

Signals applied to the input connector can be AC coupled, DC coupled, or internally disconnected from the input to the Vertical Input Amplifier circuits. When the Input Coupling switch S5 is set for DC coupling, the input signal is coupled directly to the Input Attenuator stage. When AC coupled, the input signal passes through capacitor C3. This capacitor prevents the DC component of the signal

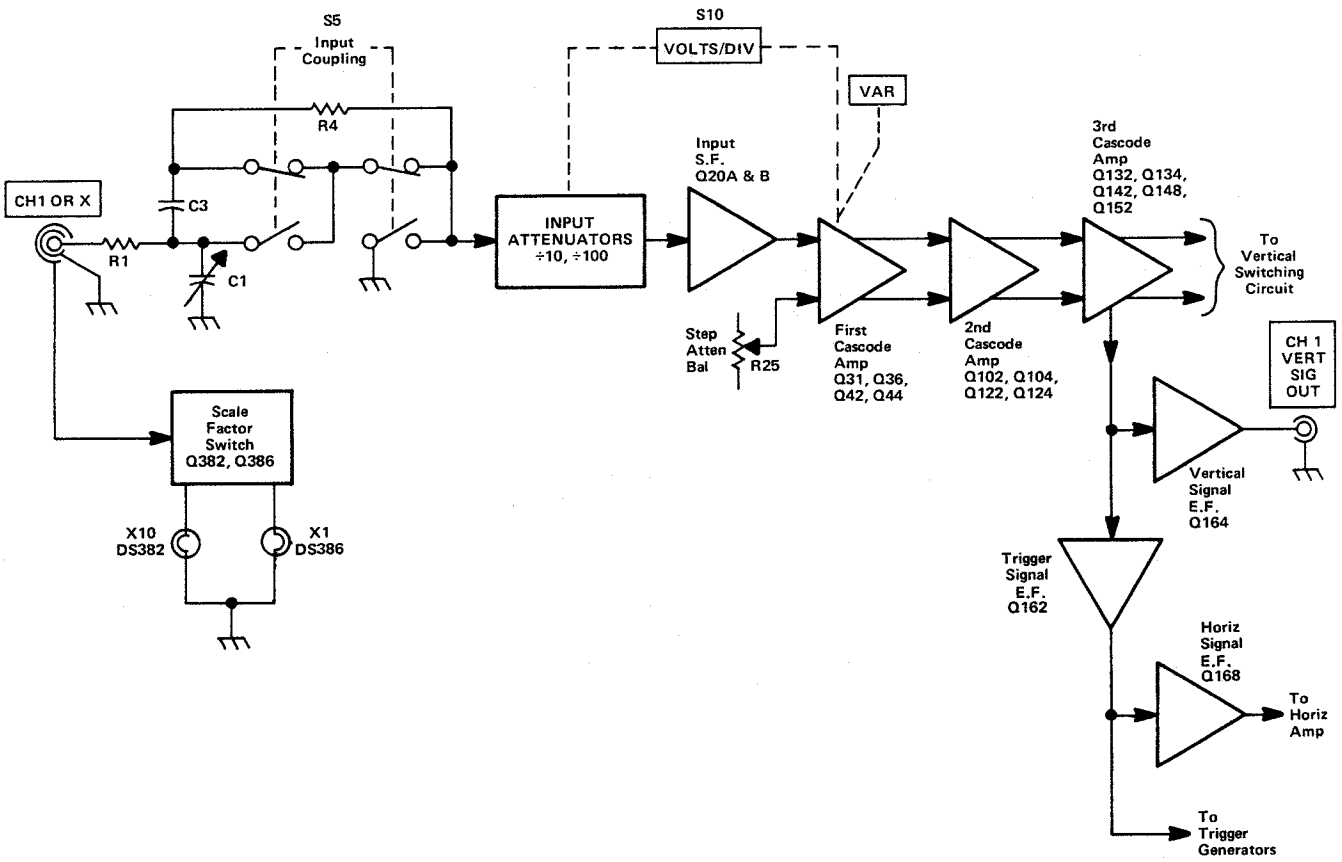

Fig. 3-2. Detailed block diagram of the Channel 1 Preamplifier.

from passing to the amplifier. In the GND position, S5 opens the signal path and connects the input of the amplifier to ground. This provides a ground reference without the need to disconnect the applied signal from the input connector. Resistor R4, connected across the input coupling switch, allows C3 to be pre-charged in the ground position so that the trace remains on screen when switched to the AC position.

Input Attenuator

The effective overall deflection factor of each channel of the 465 is determined by the appropriate VOLT/DIV switch. The basic deflection factor of the Vertical Deflection System is 5 mV/division of CRT deflection. To achieve the deflection factor values indicated on the front panel, precision attenuators are switched in to the circuit and the gain of the First Cascode Amplifier stage is changed.

For the VOLT/DIV switch positions above 5 mV, attenuators are switched in to the circuit, singly or in pairs, to help produce the vertical deflection factors indicated on the front panel. These attenuators are frequency-compensated voltage dividers. In addition to providing constant attenuation at all frequencies within the bandwidth of the instrument, the Input Attenuators are designed to maintain the same input RC characteristics (1 MΩ times approximately 20 pF) for each setting of the VOLT/DIV switch. Each attenuator contains an adjustable series capacitor to provide correct attenuation at high frequencies and an adjustable shunt capacitor to provide correct input capacitance.

NOTE

Each attenuator is a hybrid encapsulated plug-in assembly; therefore, replacement of individual components within the attenuator is not possible. Should defects occur, the attenuator must be replaced as a unit.

Scale-Factor Switching Circuit

The vertical deflection factor for each channel is indicated by back-lighting the appropriate figures imprinted on the flange of the VOLTS/DIV knob. When a X1 probe is connected to the CH 1 OR X input connector, the base level of transistor Q386 is determined by the voltage divider composed of R384, R383 and X10 display factor bulb DS382. Q386 is biased into saturation and conducts current through the X1 indicator DS386. When Q386 conducts, the voltage level at its collector is very close to +5 volts. Therefore, there is insufficient bias at the base of Q382 to cause Q382 to conduct, and the X10 indicator DS382 remains dark.

When a X10 probe with a scale factor switching connector is attached to the CH 1 OR X input connector, the base of Q382 is returned to ground through R381. Q382 is now biased into saturation and conducts current through X10 indicator DS382. The collector level of Q382 is very close to +5 volts; therefore, there is insufficient bias at the base of Q386 to cause it to conduct and X1 indicator DS386 remains dark.

Source Follower Stage

The Channel 1 signal from the Input Attenuator is connected to the Source Follower Stage through R16 and C16. R15 provides the input resistance for this stage. R16 limits the current drive to the gate of Q20A. Diode CR18 protects the circuit by clamping the gate of Q20A at about −8.7 volts if a high amplitude negative-going signal is applied to the CH 1 OR X input connector. Q20B is a relatively constant current source for Q20A.

First Cascode Amplifier Stage

The Paraphase Amplifier Stage composed of Q32 and Q36 converts the single-ended input signal into a push-pull output signal. C33, C34 and CR34 optimize high frequency response through the amplifier stage. R37 and R38 provide thermal balance for the amplifier. C37 and C38 minimize Miller effect through Q32 and Q36. Step Atten Bal adjustment R25 adjusts for no baseline shift of a CRT display when switching between adjacent positions of the VOLTS/DIV switch.

The Common Base Amplifier stage composed of Q42 & Q44 converts the input signal currents into output voltage signals across load resistors R44 and R45. Correct vertical deflection factors are obtained by using a combination of attenuation in the Input Attenuator Stage and changing the gain of the first Cascode Amplifier Stage. For example, when switching from 50 mV/division to 100 mV/division, the input attenuator remains the same but R46 is switched in parallel with R44 and R45. This divides the output load resistance of the Common Base Amplifier Stage by two, thereby reducing the gain of the stage by two. C46, C47, C48, C49, R47 and R48 provide optimum high frequency response through the channel amplifier when operating with reduced gain.

Second Cascode Amplifier

Transistors Q102-Q122 and Q104-Q124 constitute the Second Cascode Amplifier stage of the Channel 1 vertical preamplifier. Gain adjust R118 sets the overall gain of the Channel 1 vertical preamplifier by adjusting the signal current into the emitters of Q122 and Q124. The VAR control R112, when rotated out of the calibrated detent

position, also adjusts the signal currents into Q122 and Q124 to provide uncalibrated deflection factors between the calibrated settings of the VOLTS/DIV switch. Variable balance adjustment R120 adjusts for no baseline shift of a CRT display when rotating the VAR control. Position Centering adjustment R115 centers the range of control of the Channel 1 POSITION control.

Third Cascode Amplifier

Q132 and Q134, in conjunction with Q304 and Q308 in the Vertical Switching Circuit, form the Third Cascode Amplifier stage. Thermistor RT131 (between the emitters of Q132 and Q134) changes in value with changes in temperature. This varies the gain of the Third Cascode Amplifier stage to compensate for changes in total amplifier gain that occur with variations in operating temperature. The push-pull signals picked off in the emitters of Q132 and Q134 are converted to a single-ended signal by Q142 and Q148. This signal is amplified by common-base amplifier stage Q152 and applied to the bases of emitter followers Q162 and Q164. Q164 provides the output signal to the CH 1 VERT SIGNAL OUT connector located on the instrument rear panel. The output signal at the emitter of Q162 is used as the trigger signal source in the CH 1 positions of the Trigger SOURCE switches and as the signal source for emitter follower Q168. Q168 provides the X-axis signal from the Channel 1 Preamplifier to the Horizontal Amplifier in the X-Y mode of operation. CR164, CR165, CR166, and CR167 protect the emitter circuit of Q164 in the event large voltage levels are accidentally connected to the CH 1 VERT SIGNAL OUT connector. R155 adjusts the DC level of the CH 1 trigger source signal.

CHANNEL 2 PREAMP

General

The Channel 2 Preamp circuit is basically the same as the Channel 1 Preamp. Only the specific differences between the two circuits are described here. Portions of this circuit not described in the following description operate in the same manner as for the Channel 1 Preamp. Fig. 3-3 shows a detailed block diagram of the Channel 2 Preamp circuit. A schematic of this circuit is shown on diagram 2 at the rear of this manual.

Second Cascode Amplifier

The Second Cascode Amplifier in Channel 2 is basically the same as the Second Cascode Amplifier in Channel 1 except that the Channel 2 INVERT switching takes place here. For a normal (non-inverted) display, +5 volts is connected to the bases of transistors Q222 and Q224 by INVERT switch S225. The voltage divider comprised or R225 and R226 applies approximately +2.5 volts to the base of Q226 and Q228. Q222 and Q224 are biased on and Q226 and Q228 are biased off, and the signal passes on to the output cascode amplifier stage normally. With the INVERT switch in the INVERT (button in) position, +5 volts is applied to the bases of Q226 and Q228. The voltage divider composed of R225 and R224 applies approximately +2.5 volts to the bases of Q222 and Q224. Q226 and Q228 are now biased on and Q222 and Q224 are biased off. The signal that was normally applied to the base of Q232 is now applied to the base of Q234 through transistor Q228 and the signal that was normally applied to the base of Q234 is now applied to the base of Q232 through transistor Q226.

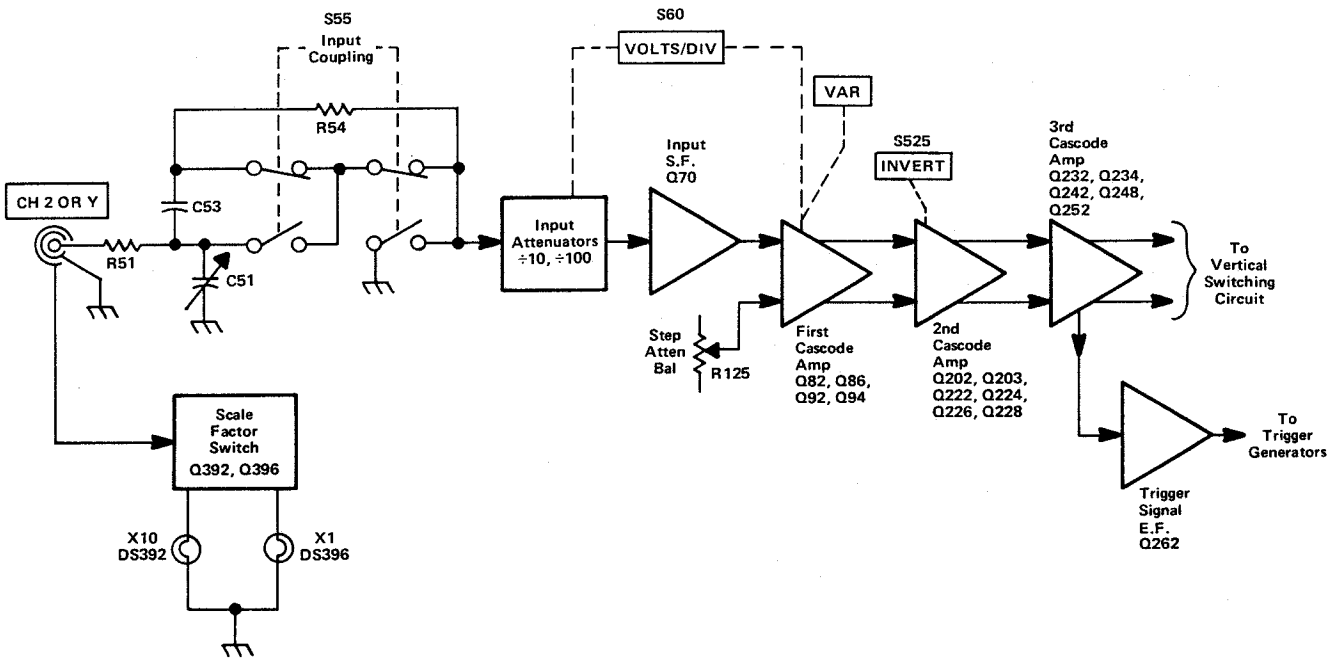

Fig. 3-3. Detailed block diagram of the Channel 2 Preamplifier.

Third Cascode Amplifier

The trigger pickoff circuit only provides a signal to one emitter follower. This emitter follower (Q262) in turn provides the trigger signal to the Trigger Generator circuits in the CH 2 positions of the SOURCE switches.

VERTICAL SWITCHING CIRCUIT

General

The Vertical Switching Circuit determines whether the Channel 1 or Channel 2 or both signals are connected to the Vertical Output Amplifier Circuit. In the alternate and chopped modes of operation both channels are alternately displayed on a shared time basis. Fig. 3-4 shows a detailed block diagram of the Vertical Switching Circuit. A schematic of this circuit is shown on diagram 3 at the rear of this manual.

Diode Gates

The Diode Gates, consisting of four diodes each, can be thought of as switches which allow either of the Vertical Preamp output signals to be coupled to the Vertical Output Amplifier. CR304, CR305, CR307 and CR308 control the Channel 1 output and CR314, CR315, CR317 and CR318 control the Channel 2 output. These diodes are in turn controlled by the Switching Multivibrator for dual trace displays, or by the VERT MODE switch for single trace displays.

Channel 1 Only Display. When the CH 1 pushbutton is pressed, −8 volts is applied to the junction of CR315-CR317 in the Channel 2 Diode Gate through R367 (see simplified diagram in Fig. 3-5). This forward biases CR315 and CR317 and reverse biases CR314 and CR318. CR314 and CR318 block the Channel 2 signal so it cannot pass to the Delay Line Driver stage. At the same time in the Channel 1 Diode Gate, CR305 and CR307 are connected to +5 volts through R371. CR305 and CR307 are held reverse-biased while CR304 and CR308 are forward biased. Therefore, the Channel 1 signal passes to the Delay Line Driver stage.

Channel 2 Display Only. When the CH 2 pushbutton is pressed, the above conditions are reversed. The junction of CR305-CR307 is connected to −8 volts through R376 and

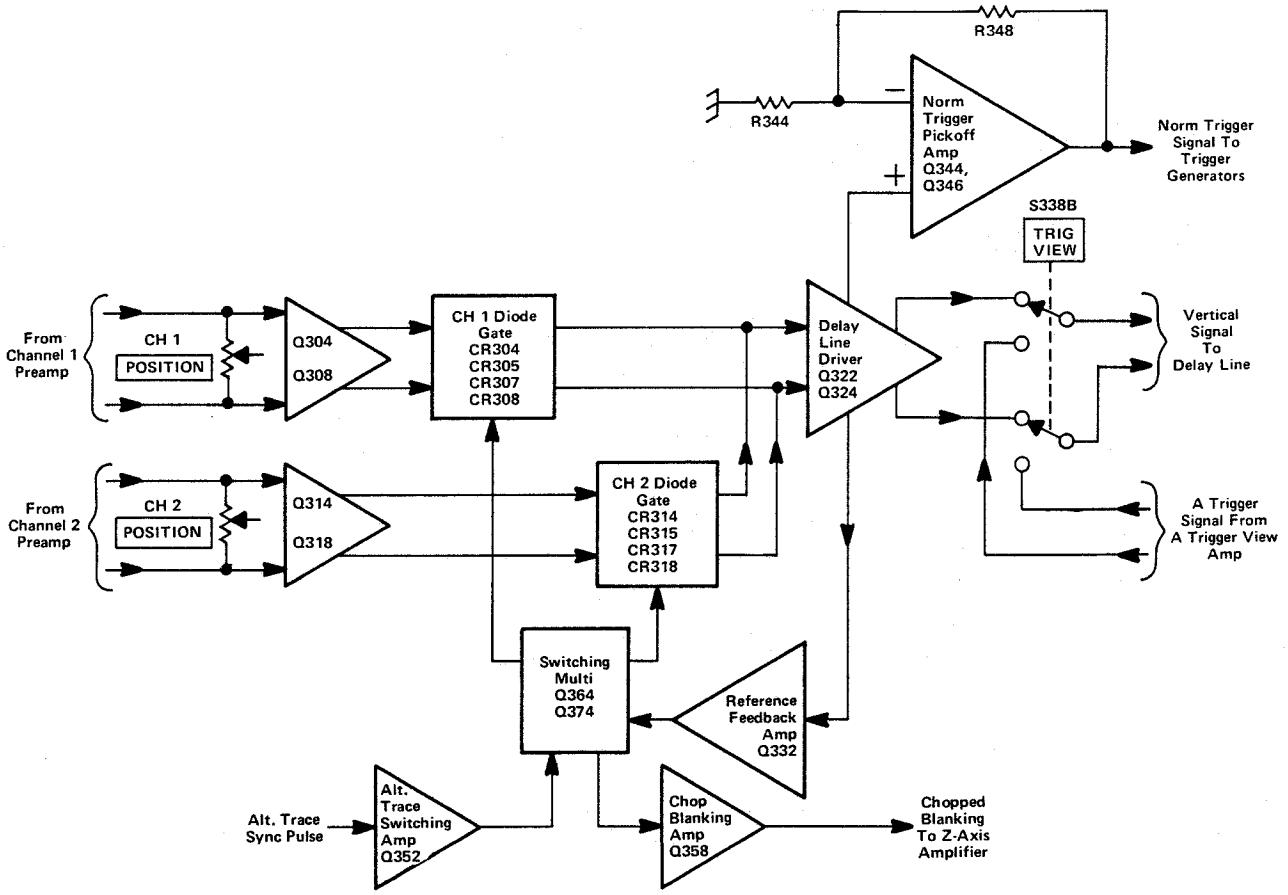

Fig. 3-4. Detailed block diagram of the Vertical Switching Circuit.

the junction of CR315-CR317 is connected to +5 volts through R361. The Channel 1 Diode Gate blocks the Channel 1 signal and the Channel 2 Diode Gate allows the Channel 2 signal to pass to the Delay Line Driver stage.

Switching Multivibrator

Alternate Trace Display. In this mode of operation, the Switching Multivibrator operates as a bistable multivibrator. When the ALT pushbutton is pressed, –8 volts is applied to the emitter of Alternate Trace Switching Amplifier stage Q352 by the VERT MODE switch. Q352 is forward biased to supply current to the "on" Switching-Multivibrator transistor through R352 and CR368 or CR378. For example, if Q374 is conducting, current is supplied to Q374 through R352 and CR378. The current flow through collector resistor R371 drops the CR305-CR307 cathode level negative so that the Channel 1 Diode Gate is blocked as for Channel 2 Only Operation. The signal passes through the Channel 2 Diode Gate to the Delay-Line Driver stage.

The alternate trace sync pulse is applied to the base of Q352 through C351 at the end of each sweep. This negative-going sync pulse momentarily interrupts the current through Q352 and both Q364 and Q374 are turned off. When Q352 turns on again after the alternate trace sync pulse, the charge on C368 determines whether Q364 or Q374 conducts. For example, when Q374 was conducting, C368 was charged positive on the CR378 side to the emitter level of Q374 and negatively on the CR368 side toward the negative level at the junction of CR368 and CR378. This charge is stored while Q352 is off and holds the emitter of Q364 more negative than the emitter of Q374. During the time Q364 and Q374 are turned off, the voltages at their bases become approximately equal. Now, when Q352 comes back on, the transistor with the most negative emitter conducts first, the resulting negative movement at its collector holds the other transistor off. The conditions described previously are now reversed: now, the Channel 2 Diode Gate is reverse-biased and the Channel 1 signal passes through the Channel 1 Diode Gate.

Chopped Mode Operation. When the CHOP pushbutton is pressed, the Switching Multivibrator stage free-runs at about a 250 kHz rate. The emitters of Q364 and Q374 are connected to –8 volts through R368, R378, and the primary of transformer T354. At the time of turn-on, one

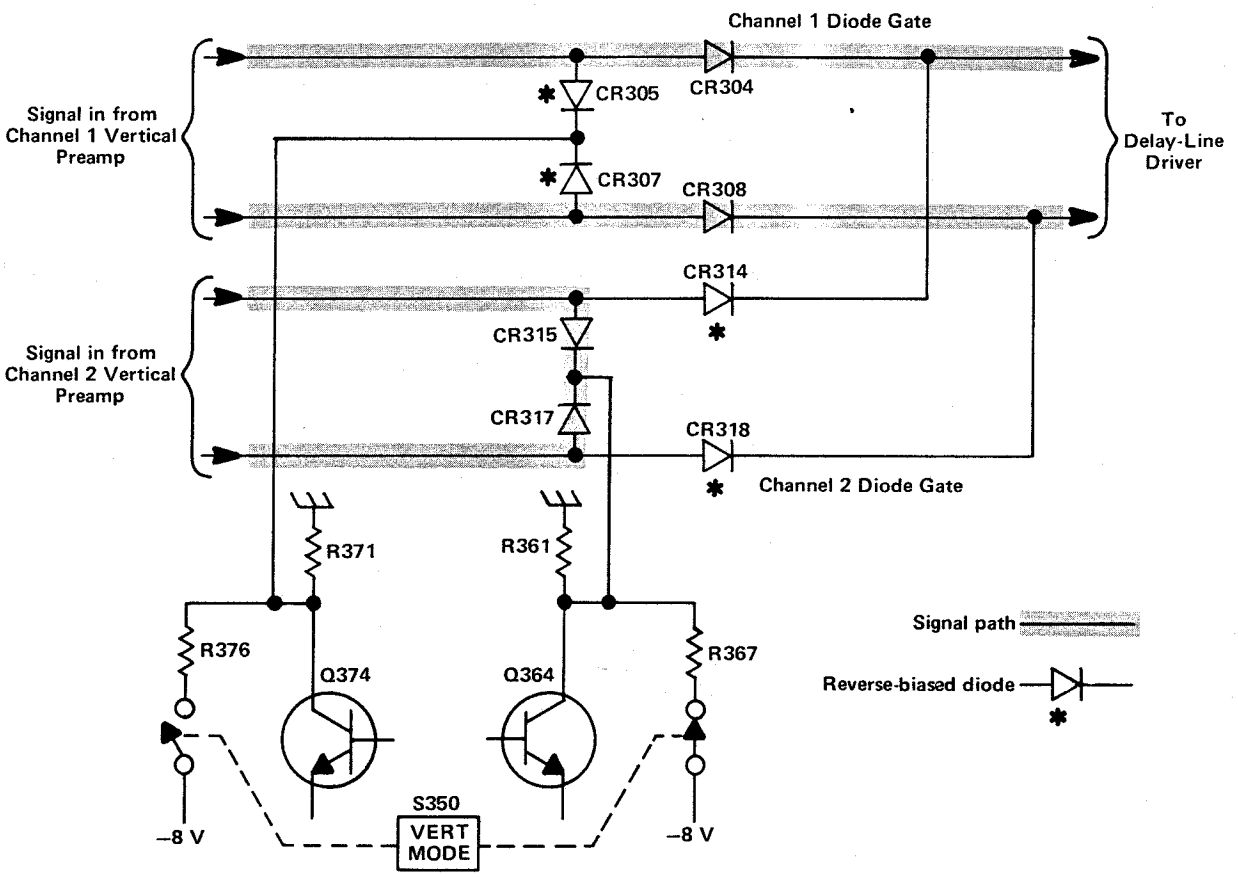

Fig. 3-5. Effect of Diode Gates on signal path (simplified Vertical Switching diagram). Conditions shown for CH 1 position of VERT MODE switch.

of the transistors begins to conduct; for example, Q374. The negative level at the collector of Q374 forward-biases CR305 and CR307 and back-biases CR304 and CR308 preventing the Channel 1 signal from reaching the Delay-Line Driver stage. Meanwhile, the Channel 2 Diode Gate passes the Channel 2 signal to the Delay-Line Driver stage.

The frequency-determining components in the CHOP mode are C368, R368, R370, and R378. The switching action occurs as follows: when Q374 is on, C368 attempts to charge to −8 volts through R368. The emitter of Q364 slowly goes toward −8 volts as C368 charges. The base of Q364 is held at a point determined by the voltage divider R365 and R374 between −8 volts and the collector level of Q374. When the emitter voltage of Q364 reaches a level slightly more negative than its base, Q364 conducts. Its collector level goes negative and pulls the base of Q374 negative through divider R364-R375 to cut Q374 off. This switches the Diode Gate stages to connect the opposite channel to the Delay-Line Driver stage. Again, C368 begins to charge towards −8 volts but this time through R378. The emitter of Q374 slowly goes negative as C368 charges until Q374 turns on. Q364 is shut off and the cycle begins again.

The Chop Blanking Amplifier stage, Q358, provides an output pulse to the Z Axis Amplifier circuit which blanks out the transition between the Channel 1 and the Channel 2 traces. When the Switching Multivibrator stage changes states, the voltage across T354 momentarily increases. A negative pulse is applied to the base of Q358 to turn it off. The width of the pulse at the base of Q358 is determined by R356 and C356. Q358 is quickly driven in to cutoff and the positive going output pulse, which is coincident with trace switching, is connected to the Z Axis Amplifier circuit through R359.

Added Mode Operation. When the ADD pushbutton is pressed, the following occurs:

1. +5 volts is applied to the cathodes of CR305 and CR307 through R371.

2. +5 volts is applied to the cathodes of CR315 and CR317 through R361.

3. −8 volts is applied to the junction of R321 and R322.

The first two actions enable both of the Channel Diode Gates so that the signal applied to the Delay Line Driver stage is the algebraic sum of the Channel 1 and Channel 2 signals. The −8 volts applied to R321 and R322 provides sufficient current to keep both diode gates turned on without altering the DC levels associated with the Delay Line Driver stage.

Delay-Line Driver

The outputs from the Diode Gate stages are applied to the Delay-Line Driver stage composed of Q322 and Q324. Q322 and Q324 are connected as feedback amplifiers with R325 and R327 providing feedback from the collector to the base of their respective transistors. A sample of the signal in the collector circuit of Q322 is used for triggering in the NORM mode of trigger operation. The BW LIMIT switch S338A connects a pi filter composed of C338, C339, L338, and L339 between the output signal lines of the Delay-Line Driver stage to reduce the upper −3 dB bandwidth limit of the Vertical Amplifier system to approximately 20 MHz. R335 and R336 provide reverse termination for the delay line. The TRIG VIEW switch S338B connects the output of the Trigger View Amplifier to the input of the Delay Line in place of the Delay Driver Stage. This allows viewing the trigger signal present in the A Trigger Generator Circuit.

Reference Feedback Amplifier

Reference Feedback stage Q332 provides common mode voltage feedback from the Delay-Line Driver stage to allow the diode gates to be switched with a minimum amplitude switching signal. The emitter level of Q332 is connected to the junction of the Switching Multivibrator collector resistors, R371 and R361 through CR372 or CR362. The collector level of the "on" Switching Multivibrator transistor is negative and either CR362 or CR372 is forward biased. This clamps the cathode level of the forward biased shunt diodes in the applicable Diode Gate about 0.5 volt more negative than the emitter level of Q332. The level at the emitter of Q332 follows the average voltage level at the emitters of the Delay-Line Driver stage. The shunt diodes are clamped near their switching level and therefore, can be switched very fast with a minimum amplitude switching signal. This maintains about the same current through the Diode Gate shunt diodes so they can be switched with a minimum amplitude switching signal regardless of the deflection signal at the anodes of the shunt diodes.

Normal Trigger Pickoff Amplifier

The trigger signal for NORM trigger operation is obtained from the collector of Q322. Normal Trigger DC Adjustment R340 sets the DC level of the normal trigger output signal so the sweep is triggered at the 0 level of the displayed signal when the Triggering LEVEL control is set to 0. Q344 and Q346 are connected as a feedback amplifier with the signal applied to the non-inverting input and the feedback connected between the output and the inverting input. Gain of the stage is approximately:

$$\frac{R348 + R344}{R344}$$

VERTICAL OUTPUT AMPLIFIER

General

The Vertical Output Amplifier circuit provides the final amplification for the vertical deflection signal. This circuit includes the Delay Line and the BEAM FIND pushbutton. The BEAM FIND pushbutton compresses an overscan

display to within the viewing area when pressed. A schematic of the Vertical Output Amplifier circuit is shown on diagram 4 at the rear of this manual.

Delay Line

Delay Line DL400 provides approximately 120 ns delay for the vertical signal to allow the Sweep Generator circuits time to initiate a sweep before the vertical signal reaches the vertical deflection plates of the CRT. This allows the instrument to display the leading edge of the signal originating the trigger pulse when using internal triggering.

Output Amplifier

U440 is an integrated circuit amplifier stage that provides the final amplification for the vertical signal. R401 and R411 provide forward termination for the delay line. The components connected between pins 2 and 4 of U440 provide delay-line compensation. Components connected between pins 14 and 15 and pins 7 and 8 of U440 provide thermal compensation for the stage. The BEAM FIND switch, when pressed, reduces the dynamic swing capabilities of the stage, thereby limiting the display to within the display area of the CRT.

A AND B TRIGGER GENERATORS

General

The Trigger Generator circuits produce trigger pulses to start the Sweep Generator circuits. These trigger pulses are derived either from the internal trigger signal from the vertical deflection system, an external signal connected to the external trigger input connectors, or a sample of the line voltage applied to the instrument. Controls are provided in each circuit to select trigger level, slope, coupling, and source. Since the A and B Trigger Generator circuits are virtually the same, only the A Trigger Generator circuit action and the differences between the A and B Trigger Generator circuits are explained. A schematic of these circuits is shown on diagram 5 at the back of this manual.

Trigger Source

The Trigger SOURCE switch S610 selects the source of the trigger signal. The sources available to the A Trigger Generator circuit are the signal(s) being displayed (NORM), Channel 1 (CH 1), Channel 2 (CH 2), LINE, and EXT. The EXT ÷ 10 (A trigger circuit only) position provides 10 times attenuation for the external trigger signal. The B Trigger SOURCE switch does not have a LINE or an EXT ÷ 10 position, but has a STARTS AFTER DELAY position.

In the LINE mode of triggering, a sample of the power line frequency is obtained from the secondary of power transformer T1501 in the Low Voltage Power Supply circuit. To prevent unwanted attenuation of the trigger signal by the LF REJ circuit, the Trigger COUPLING switches should not be in the LF REJ mode when using line voltage as a trigger source.

Trigger Coupling

The Trigger COUPLING switches offer a means of accepting or rejecting certain components of the trigger signal. In the AC, LF REJ, and HF REJ mode of trigger coupling, the DC component of the trigger signal is blocked by coupling capacitors C612 or C611. Frequency components below about 60 Hz are attenuated when using AC or HF REJ coupling and below about 15 kHz when using LF REJ coupling. The higher frequency components of the trigger signal are passed without attenuation. In the HF REJ mode of trigger coupling, the high frequency components of the trigger signal (above about 50 kHz) are attenuated, while the lower frequency components are passed without attenuation. The DC mode of trigger coupling passes unattenuated all signals from DC to 100 MHz and above.

Input Source Follower

Transistor Q622 is an FET source follower. It provides a high input impedance (set primarily by R616) for the trigger signal and also provides isolation between the Trigger Generator circuit and the trigger signal source. Diode CR617 provides input protection for Q622 if excessively high amplitude negative-going input signals are present. Q624 is a high-impedance, relatively constant, current source for Q622, and provides a measure of temperature compensation for Q622.

Paraphase Amplifier

U640 is a paraphase amplifier stage that converts the single-ended input from Source Follower Q622 into a push-pull output applied to the tunnel diode driver stage. Trigger Level Centering adjustment R635 sets the level at pins 14 and 15 of U640 so that the display is correctly triggered when the LEVEL control is centered. The LEVEL control varies the level at pins 14 and 15 of U640 to select the point on a trigger signal where triggering occurs.

The slope of the input signal that triggers the Sweep Generator circuit is determined by the setting of the SLOPE switch S630. When the SLOPE switch is set to the + position, the output signal present at pin 8 of U640 is in phase with the input signal and the output signal at pin 9 is

inverted with respect to the input signal. When the SLOPE switch is set to the – position, the output signal at pin 8 is inverted with respect to the input signal and the output signal at pin 9 is in phase with the input signal.

Tunnel Diode Driver

Q650 and Q652 are common-emitter amplifier stages that provide the signal currents necessary to switch the triggering tunnel diodes. CR650 and CR652 are 4.7 mA tunnel diodes. Quiescently (i.e., after the sweep holdoff period has passed, but before triggering), CR650 and CR652 are biased into their low voltage states. Q650 cannot provide sufficient current to switch CR650 to its high voltage state. Q652, however, can provide sufficient current to bias CR652 into its high voltage state; when Q652 next conducts triggering signal current, the anode of CR652 steps positive to an approximate +0.5 volt level. Since only approximately 1 mA of current is required to maintain CR652 in its high voltage state, this makes approximately 3 mA of current additionally available with which to switch CR650 to its high voltage state. Thus, the next time Q650 conducts signal current, CR650 steps to its high voltage state, sending a positive pulse to the logic circuit to initiate sweep action. A Trigger Sensitivity adjustment R655 adjusts the tunnel diode bias to the proper level that will not allow CR650 to be switched to its high voltage state until CR652 has been switched to its high voltage state. At the end of the sweep time and during holdoff, a negative level is applied to the anode of CR652, thereby resetting both CR650 and CR652 to their low voltage states. The reset level remains during holdoff time to ensure that a sweep gating signal will not be generated until the sweep circuit has returned to its quiescent state.

A AND B SWEEP GENERATORS

General

The A and B Sweep Generators produce sawtooth voltages which are amplified by the Horizontal Amplifier circuit to provide horizontal deflection on the CRT. These sawtooth voltages are produced on command (trigger pulses) from the Trigger Generator circuits. The Sweep Generator circuits also produce gate waveforms that are used by the Z Axis Logic circuit to unblank the CRT during sweep time, and by the Sweep Logic circuit to terminate sweep generation. Fig. 3-6 shows a detailed block diagram of the A Sweep Generator circuit. The B Sweep Generator circuit is very similar to the A Sweep Generator; therefore only the differences in operation associated with the B Sweep Generator will be discussed. A schematic of both circuits is shown on diagram 6 at the rear of this manual.

Disconnect Amplifier

After holdoff but before the next sweep, Disconnect Amplifier Q1024 conducts current through R1024 and the timing resistor R_t. This prevents timing current from

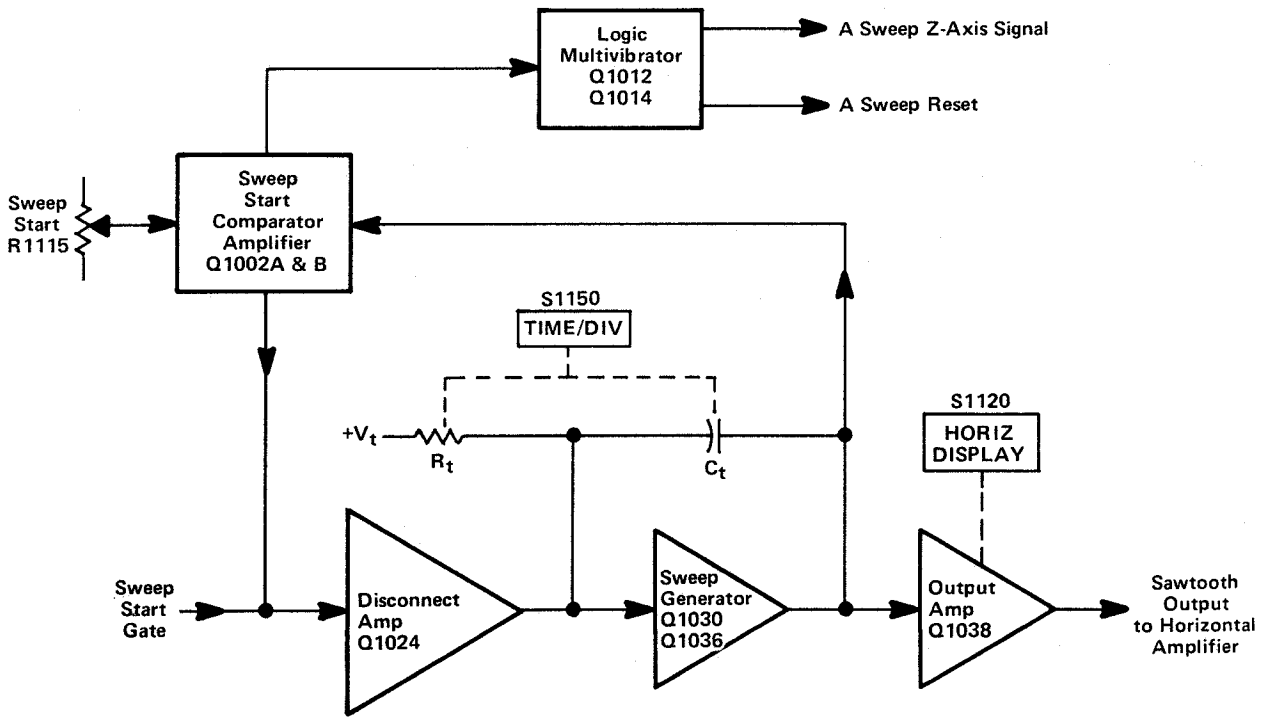

Fig. 3-6. Detailed block diagram of the A Sweep Generator.

charging the timing capacitance C_t. The positive-going sweep start gate from Q864 turns off Q1024 and the timing current now begins to charge the timing capacitance.

Sawtooth Sweep Generator

Q1030 and Q1036 compose a Miller Integrator circuit. When the current flow through the Disconnect Amplifier is interrupted, the timing capacitance begins to charge through the timing resistor. The timing resistor and capacitance are selected by the A TIME/DIV switch to provide the various sweep rates listed on the instrument front panel. The output signal at the collector of Q1036 is a negative-going sawtooth waveform.

Output Buffer Amplifier

The Output Buffer Amplifier stage is a common-base amplifier with the signal current-driven into the emitter. It provides the output sawtooth current signal to the Horizontal Amplifier and provides a measure of isolation between the Sawtooth Generator and the Horizontal Amplifier. The HORIZ DISPLAY switch connects to this stage to control the A sawtooth output in the various horizontal modes of operation. In the A and A INTEN modes of operation, the A sweep signal passes through Q1038 to the Horizontal Amplifier. However, in the MIX and B DLY'D modes, −8 volts is connected to zener diode VR1039 which sets the emitter of Q1038 at about −1.8 volts. This biases Q1038 off, preventing the A sawtooth signal from passing to the Horizontal Amplifier.

Sweep Start Amplifier

Just before the sweep starts to run down, the levels at the bases of Q1002 A and B are approximately equal. When the sweep starts to run down, the base of Q1002B goes negative, which increases the forward bias on CR1004. This in turn decreases the forward bias on CR1001, which, very shortly after the start of the sweep, becomes reverse biased to interrupt the current through Q1002A. The circuit remains in this condition until after the sweep retrace is complete. When the circuit returns to quiescence, Q1002A again begins to conduct through R1024. This sets the current through Q1024, which establishes the starting point for the sweep. The Sweep Start adjustment sets the base level of Q1002A. This level is also connected to the base of Q1062A in the B Sweep Generator except in the MIX mode of operation. This ensures that B Sweep starts at the same level as A Sweep.

Logic Multivibrator

Q1012 and Q1014 compose a multivibrator. At quiescence, Q1014 is conducting and Q1012 is turned off. When the sweep starts to run, the negative-going ramp is coupled through the base of Q1002B and CR1004 to the cathode of CR1011. CR1011 becomes forward biased and when the level at the anode of CR1011 falls to about +4 volts Q1012 conducts and Q1014 turns off. The multivibrator remains in this state until the sweep starts to retrace and the voltage level at the anode of CR1011 rises above about +4.5 volts. The resultant pulse at the collector of Q1012 is applied to Sweep Control IC U870 to terminate the sweep. The pulse at the collector of Q1014 is applied to the A Sweep Z Axis Logic Gate to blank the CRT at the end of the sweep.

B Sweep Generator Differences

There are three prime differences between the A and B Sweep Generators. The B Sweep Output Buffer Amplifier is prevented from passing the B Sweep signal to the Horizontal Amplifier in the A and A INTEN positions of the HORIZ DISPLAY switch. There is a transistor stage connected as a constant current source in the emitter circuit of Q1062A and B (corrects for current imbalances side-to-side in Q1062 during MIX mode operation). The Sweep Start Level connected to the base of Q1062A is not always a fixed DC level. During MIX mode operation the A Sweep Sawtooth signal is applied to the base of the amplifier. Now, the DC level at which the B Sweep Generator will start generating its sawtooth waveform is constantly being changed by the A Sweep sawtooth. The output waveform from the B Sweep Generator takes the form of a composite sawtooth waveform, with the first and last parts occurring at a rate determined by the A Sweep Generator and the middle part occurring at a rate determined by the B Sweep Generator.

SWEEP AND Z AXIS LOGIC CIRCUIT

General

The Sweep And Z Axis Logic Circuit derives the logic levels necessary to control the sequence of events associated with sweep generation and CRT unblanking. The +A and +B GATE signals are also generated in this circuit. Positive logic terminologies and symbologies will be used in the following explanation of circuit operation. A schematic of this circuit is shown on diagram 8 at the rear of this manual.

A Sweep Gate

Q862 and Q864 compose the A Sweep Gate Circuit. They form an emitter coupled stage where only one transistor can be conducting at any time. The input signal to the stage is the positive-going trigger signal from the A Fire Trigger TD in the A Trigger Generator Circuit. The

For Service Manuals
MAURITRON SERVICES
8 Cherry Tree Road, Chinnor
Oxfordshire, OX9 4QY.
Tel (01844) 351694
Fax (01844) 352554
email:- mauritron@dial.pipex.com

signal at the collector of Q862 is connected to the A Z Axis Gate Circuit to control CRT blanking and to generate the + A GATE signal. The signal at the collector of Q864 is connected to the emitter of the Sweep Disconnect Amplifier stage (Q1024) in the A Sweep Generator Circuit to initiate A Sweep generation.

B Sweep Gate

Q812 and Q814 compose the B Sweep Gate Circuit. They also form an emitter-coupled stage where only one transistor can be conducting at any time. The input signal to the stage is the positive-going trigger signal from the B Fire Trigger TD in the B Trigger Generator Circuit. The signal at the collector of Q812 is connected to the B Z Axis Gate Circuit to control CRT blanking and to generate the + B GATE signal. The signal at the collector of Q814 is connected to the emitter of the Sweep Disconnect Amplifier stage (Q1084) in the B Sweep Generator Circuit to initiate B Sweep generation.

Sweep Control Integrated Circuit

U870 is the Sweep Control Integrated Circuit. Several functions are performed in this stage, depending on the mode of operation of the instrument sweep generators. The following is a brief explanation of the function associated with each pin of the IC.

Pin 1. This is the positive Auto Sense input. The signal connected here comes from the A Fire Trigger TD.

Pin 2. This is the negative Auto Sense input. A fixed DC level established by R871 and R872 is connected here.

Pin 3. This is the + auto gate terminal. In the AUTO mode of operation, if no trigger signals are applied to pin 1 of U870 during the ≈100 ms following the end of holdoff the gate level at pin 3 steps LO to turn Q864 on which initiates a sweep.

Pin 4. Not used in this application.

Pin 5. Input terminal for negative voltage supply.

Pin 6. This is the auto gate timing terminal. R879 and C879 determine the amount of time between the end of holdoff and the generation of the auto gate.

Pin 7. This terminal lights the TRIG'D light when a triggered gate has occurred.

Pin 8. This is the holdoff timing terminal. The R/C connected to this terminal (selected by the TIME/DIV switch) determines the length of holdoff time.

Pin 9. Ground terminal.

Pin 10. This is the Holdoff output terminal. The gate level present here is LO during sweep holdoff time and HI otherwise.

Pin 11. This terminal lights the READY light when operating in the single sweep mode.

Pin 12. This is the single sweep mode terminal. When +5 volts is applied to this terminal the sweep operates in the single sweep mode; when the terminal is left open or grounded the sweep operates in the repetitive mode.

Pin 13. Not used in this application.

Pins 14 & 15. Single sweep reset terminals. Pushing the PUSH TO RESET button prepares the single sweep circuitry to respond to the next one triggering event. Also causes the READY light to be lit.

Pin 16. This is the holdoff start input terminal. The HI sweep reset gate pulse from the sweep generators is applied here to initiate sweep holdoff.

Pin 17. This is the sweep disable output terminal. The gate level at this terminal is HI during holdoff and LO otherwise.

Pin 18. Sweep lockout input. +5 volts applied to this terminal disables all sweep action.

Pin 19. Auto mode terminal. Grounding this terminal enables auto sweep operation.

Pin 20. Input terminal for positive voltage supply.

A Sweep Holdoff Amplifier

Q854 is the A Sweep Holdoff Amplifier. The holdoff gate waveform is applied to the base of Q854 through R858 and C858 from pin 17 of U870. When Q854 is turned off (during holdoff time), its collector is LO and CR851 is forward biased, which resets both the Arm and Fire trigger TD's in the A Trigger Generator. When Q854 is turned on (any time other than holdoff time), its collector level is HI and CR851 is reversed biased. This allows the trigger TD's in the A Trigger Generator to respond to the next adequate triggering signal.

B Sweep Holdoff Amplifier

Q804 is the B Sweep Holdoff Amplifier. Its circuit action is identical to that described for the A Sweep Holdoff Amplifier except that there are three gate signal sources that control the state of the stage. The three sources are the holdoff gate from pin 17 of U870 (through CR859), the collector of Q1052 in the Delay Pickoff Comparator, and the collector of Q822 in the B Latch Multivibrator (through CR809). All three gate sources must be in their LO state for B Sweep to be triggerable; any one of the sources in its HI state will disable the B Trigger Generator TD's.

A Sweep Z-Axis Gate

Q1304 and Q1306 comprise the A Sweep Z-Axis Gate. They form an emitter-coupled stage where only one transistor can be conducting at any time. The controlling signal inputs come from the collector of Q862 in the A Sweep Gate, the blanking signal from Q1014 in the A Sweep Generator, and Q824 in the B Latch Multivibrator (only in the MIX mode of operation). The blanking signal for use in the Z-Axis Amplifier is taken from the collector of Q1306 (through CR1342). The collector signal of Q1304 is applied to the +A GATE Emitter Follower.

In all positions of the HORIZ DISPLAY switch except for B DLY'D, –8 volts is connected to the cathode of CR1341. This pulls the anode of CR1306 down very close to –8 volts, causing CR1306 to be reverse biased, which in turn allows the gate signal at the collector of Q1306 to pass through CR1342. In the B DLY'D position of the HORIZ DISPLAY switch, –8 volts is no longer connected to CR1341. This allows CR1306 to be forward biased, which pulls up on the cathode of CR1342. This reverse-biases CR1342, which blocks the A blanking signal from reaching the Z-Axis Amplifier.

In all positions of the HORIZ DISPLAY switch except MIX, –8 volts is connected to the cathode of CR832. This keeps CR831 reverse biased and prevents the collector signal of Q824 from affecting the A Z-Axis Gate. However, in the MIX position of the HORIZ DISPLAY switch, –8 volts is no longer connected to CR832. Now, when the B Sweep ends and sets the B Sweep Latch circuit, the collector signal of Q824 (through CR831) switches the A Sweep Z-Axis Gate causing the CRT display to be completely blanked. This prevents any further display of A Sweep in the MIX mode even though A Sweep may still be running.

B Sweep Z-Axis Gate

Q1324 and Q1326 compose the B Sweep Z-Axis Gate. They form an emitter-coupled stage where normally one transistor is on and the other is off. The controlling signal inputs come from the collector of Q812 in the B Sweep Gate and the blanking signal from Q1074 in the B Sweep Generator. The blanking signal for use in the Z-Axis Amplifier is taken from the collector of Q1326 (through CR1344). The collector signal of Q1324 is applied to the +B GATE Emitter Follower.

In the A position of the HORIZ DISPLAY switch, –8 volts is applied to the cathode of CR1347, which causes CR1345 to be back biased. The collector of Q1326 is pulled positive through R1326 and CR1326, which in turn back biases CR1344, preventing the B Sweep Z-Axis Gate from affecting CRT unblanking. In the MIX and A INTEN positions of the HORIZ DISPLAY switch, –8 volts is removed from the cathode of CR1347 and applied to the cathode of CR1327. This forward biases CR1345 and reverse biases CR1326. CR1344 is still reverse biased, but when B Sweep starts, the collector of Q1326 steps negative enough to forward bias CR1344 and add a slight amount of unblanking to the A Sweep unblanking already present. This provides a measure of intensification for the B Sweep portion of an A INTEN or MIX display. In the B DLY'D position of the HORIZ DISPLAY switch, –8 volts is applied to the cathodes of CR1327 and CR1347. This reverse biases both CR1345 and CR1326, which allows the full B Sweep unblanking signal to pass through CR1344. Since the A Sweep Z-Axis Gate output diode CR1342 is held reverse biased, the only unblanking signal present at the input to the Z-Axis Amplifier will be the B Sweep signal.

+A GATE And +B GATE Emitter Followers

Q1314 and Q1334 are emitter followers providing the +A GATE and +B GATE output signals available at the instrument rear panel. The output signals are positive-going rectangular waveforms, approximately 5.5 volts in amplitude. The amplitude is set in the collectors of Q1304 and Q1324. For example, when Q1304 is conducting the base of Q1314 can go no more negative than approximately –0.7 volt (limited by CR1304). When Q1304 is not conducting, the base of Q1314 rises to the decoupled +5 volts power supply level through R1304. CR1315, CR1316,

CR1335, and CR1336 provide protection against accidental application of damaging voltage levels to the +A GATE and +B GATE output connectors.

B Sweep Latch

Q822 and Q828 compose the B Sweep Latch. Quiescently, (before either the A or B Sweeps have reached their maximum amplitudes) both transistors are off. Then, the sweep reset pulse from whichever sweep terminates first will be applied to the base of Q828 (A Sweep reset through CR826; B Sweep reset through CR825). The positive-going reset pulse turns on Q828 and the negative-going movement at its collector turns on Q822. The collector of Q822 in turn pulls up on the base of Q828, holding Q828 on, which causes the circuit to stay in its on or latched state. The HI at the collector of Q822 is applied to the base of the B Sweep Holdoff Amplifier (through CR809) to disable the B Trigger Tunnel Diodes. In the B ENDS A position of the A TRIG HOLDOFF control the HI is also applied to the holdoff start input terminal of the Sweep Control IC through C286. Thus, when B Sweep ends A Sweep ends also.

The B Latch Multivibrator is reset to its quiescent state by the LO Holdoff level Present at pin 10 of the Sweep Control IC during A Sweep holdoff.

HORIZONTAL AMPLIFIER

General

The Horizontal Amplifier circuit provides the output signals to the CRT horizontal deflection plates. The signal applied to the input of the Horizontal Amplifier is determined by the TIME/DIV switch. The signal can be a sawtooth waveform generated within the instrument, or some external signal applied to the CH 1 OR X input connector (X-Y mode of operation). The Horizontal Amplifier also contains the X10 magnifier, horizontal positioning, and some beam finder circuitry. Fig. 3-7 shows a detailed block diagram of the Horizontal Amplifier circuit. A schematic of this circuit is shown on diagram 9 at the rear of this manual.

X-Axis Amplifier

In all positions of the TIME/DIV switches except X-Y, the input signal to the base of Q1224 will be the sawtooth waveforms from the sweep generators. In the X-Y mode however, the sweeps are disabled and the signal applied to Q1224 comes from the Channel 1 Preamp via the X-Axis Amplifier stage. This stage includes Q1214, Q1218, and their associated circuitry.

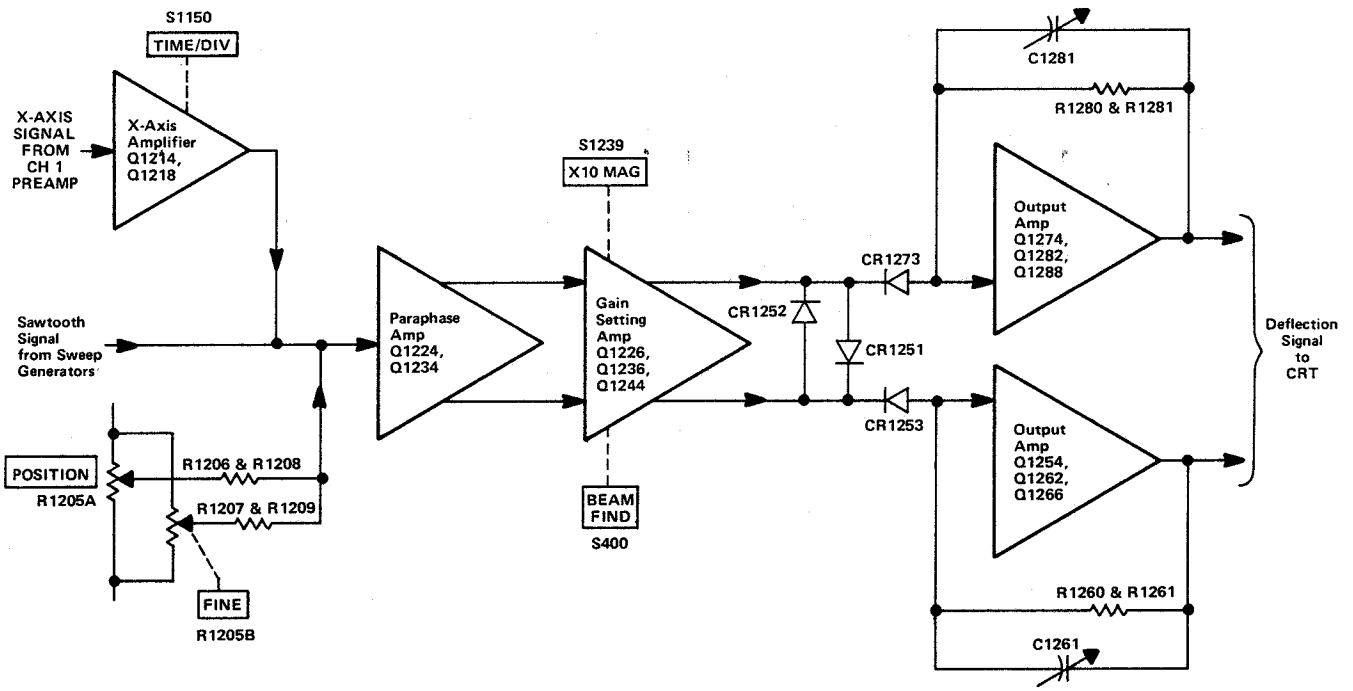

Fig. 3-7. Detailed block diagram of the Horizontal Amplifier.

Q1214 is connected as a feedback amplifier with R1214 as the feedback element. The input resistance is made up of R1211 and the gain-setting adjustment R1215. When not operating in the X-Y mode, the base of Q1214 rises toward the +15 volt supply but is clamped at approximately +5.7 volts by CR1216. This reverse biases the base-emitter junction of Q1214. The base of Q1218 also rises to approximately +5.7 volts. With the junction of R1202-R1219 sitting at approximately 0 volts, Q1218 is also biased off.

When the TIME/DIV switches are set to the X-Y position (fully counterclockwise), –8 volts is applied to the junction of R1212 and R1217. Also, +5 volts is applied to the emitter circuit of Q1218 through CR1202. This biases the Z-Axis Amplifier circuit into conduction. At the same time, +5 volts is applied to the Channel 1 Scale-Factor Switching Amplifier circuit (through CR1201) and to pin 18 of the Sweep Control Integrated Circuit U870. This enables both scale-factor indicating circuits at the same time and disables sweep generation.

Input Paraphase Amplifier

Q1224 and Q1234 compose the Input Paraphase Amplifier. This is an emitter-coupled amplifier stage that converts the single-ended input signal to a push-pull output signal. The signal at the collector of Q1224 is opposite in phase to the input signal. The signal at the collector of Q1234 is in phase with the input signal. Thermistor resistor RT1230 reduces in value with increases in ambient temperature to increase the gain of the stage. This compensates for changes in amplifier gain that occur as operating temperatures vary. R1205A and R1205B are the Horizontal POSITION and FINE controls, respectively. The FINE control has approximately one tenth the range of the POSITION control and provides fine adjustment of a magnified display.

Gain Setting Amplifier

Q1226 and Q1236 are an emitter coupled push-pull amplifier stage. Q1244 is a constant current supply for the stage. The gain of the Horizontal Amplifier is controlled by adjusting the resistance connected between the emitters of this stage. The X1 Gain adjustment R1237 adjusts unmagnified horizontal gain and the X10 Gain adjustment R1238 adjusts magnified horizontal gain. Magnifier Registration adjustment R1225 balances quiescent DC current in Q1226 and Q1236 so that a center screen display does not change position when the X10 Magnifier is turned on.

When the BEAM FIND pushbutton is pressed, R1249 is connected to ground. This reduces the current supplied through Q1244, which has the effect of shifting the operating level at the collector of Q1244 in the positive direction. This causes the Horizontal Amplifier to operate closer to the point where signal limiting occurs, thereby ensuring that an overscanned display will remain within the viewing area of the CRT.

Output Amplifier

The push-pull signal from the Gain Setting Amplifier is connected to the Output Amplifier through CR1253 and CR1273. Each half of the Output Amplifier can be considered as a single-ended feedback amplifier, which amplifies the signal current at the input to produce a voltage output to drive the horizontal deflection plates of the CRT. The amplifiers have a low input impedance and require very little voltage change at the input to produce the desired output change. The Output Amplifiers are limited from overdrive by CR1251, CR1252, CR1253, and CR1273. The input diodes CR1253 and CR1273 become back-biased when the signal level at either input becomes too positive, and the diodes connected back to back between the two signal paths ensure that the signal amplitude side to side will be limited to a maximum of about 0.7 volt.

Transistors Q1254 and Q1274 are inverting amplifier stages whose collector signals drive the emitters of complementary amplifiers Q1262-Q1266 and Q1282-Q1288 respectively. C1256, C1262, and C1282 provide a signal path for fast AC signal currents from one side of the amplifier to the other. R1260-R1261 and R1280-R1281 are the feedback elements in the amplifier with C1261 and C1281 providing high-frequency compensation. The output signal from Q1262-Q1266 drives the right CRT deflection plate, while the signal from Q1282-Q1288 drives the left.

CRT CIRCUIT

General

The CRT Circuit provides the voltage levels and control circuits necessary for operation of the cathode-ray tube (CRT). Fig. 3-8 shows a detailed block diagram of the CRT Circuit. A schematic of this circuit is shown on diagram 10 at the rear of this manual.

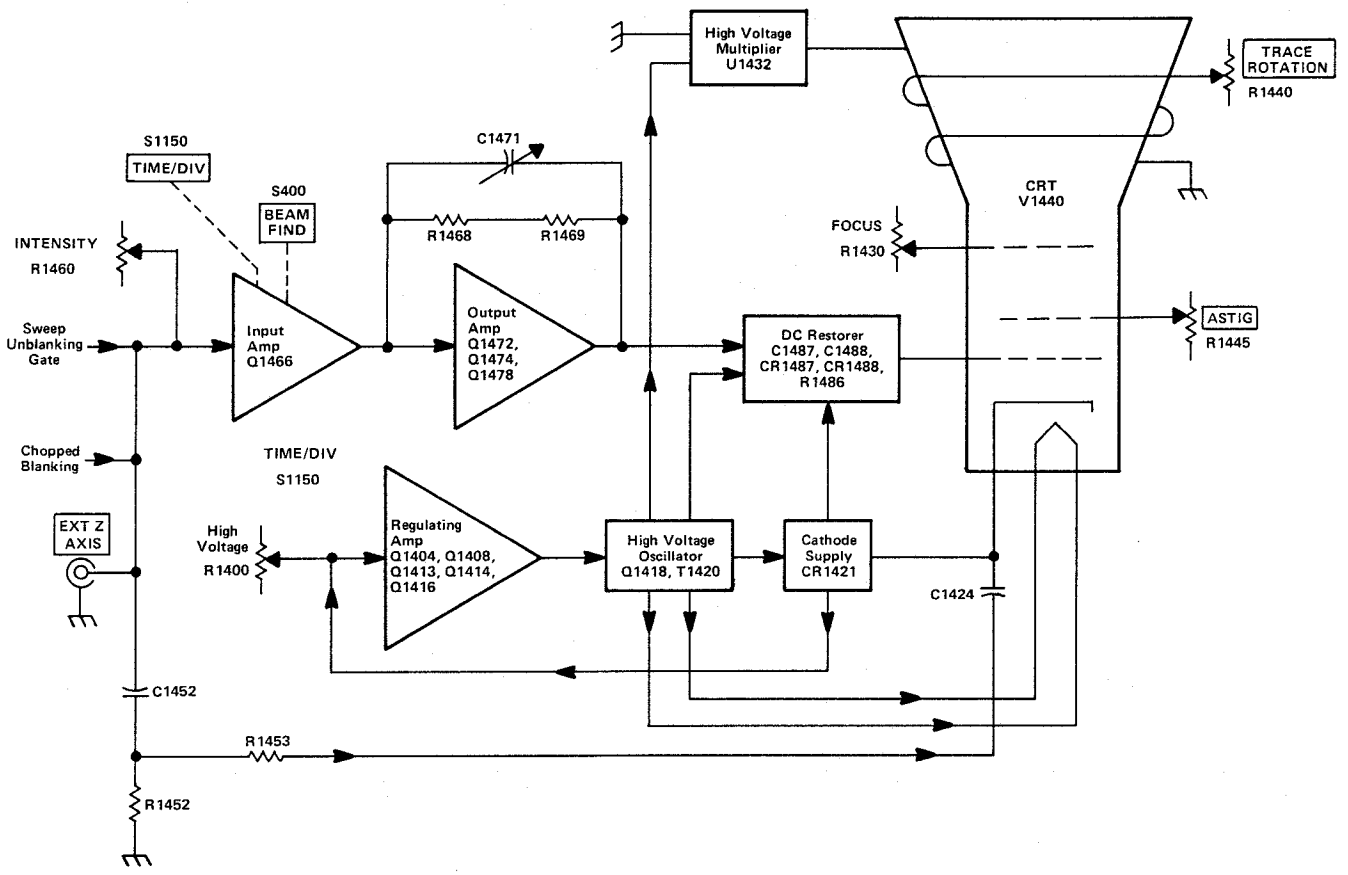

Fig. 3-8. Detailed block diagram of the CRT & Z-AXIS Circuits.

High-Voltage Oscillator

Q1418 and associated circuitry compose the high-voltage oscillator that produces the drive for high-voltage transformer T1420. When the instrument is turned on, current through Q1416 provides forward bias for Q1418. Q1418 conducts and the collector current increases, which develops a voltage across the collector winding of T1420. This produces a corresponding voltage increase in the feedback winding of T1420, which is connected to the base of Q1418, and Q1418 conducts even harder. Eventually the rate of collector current increase in Q1418 becomes less than that required to maintain the voltage across the collector winding, and the output voltage drops. This turns off Q1418 by way of the feedback voltage to the base. The voltage waveform at the collector of Q1418 is a sine wave at the resonant frequency of T1420. Q1418 remains off during the negative half cycle while the field collapses in the primary of T1420. When the field is collapsed sufficiently, the base of Q1418 becomes forward biased into conduction again and the cycle begins anew. The amplitude of sustained oscillation depends upon the average current delivered to the base of Q1418. The frequency of oscillation is approximately 50 kilohertz. Fuse F1419 protects the +15 volt supply in the event the High-Voltage Oscillator stage becomes shorted. C1419 and L1419 decouple the +15 volt supply line and prevent the current changes present in the circuit from affecting the +15 volt regulator.

High-Voltage Regulator

Feedback from the CRT cathode −2450 volt supply is applied to the base of Q1404 through R1431D. Any change in the level at the base of Q1404 produces an error signal at the collector of Q1404, which is amplified by Q1408 and Q1416 and applied to the base of Q1418 through the feedback winding of T1420. Regulation occurs as follows.

If the output voltage at the −2450 volt test point starts to go positive (less negative), this positive-going change is applied to the base of Q1404. Q1404 conducts harder, which in turn causes Q1408 and Q1416 to conduct harder. This results in greater bias current to the base of Q1418 through the feedback winding of T1420. Now, Q1418 is biased closer to its conduction level so that it comes into conduction sooner to produce a larger induced voltage in the secondary of T1420. This increased voltage appears as a more negative voltage at the −2450 volt test point to correct the original positive-going change. By sampling the

output from the CRT cathode supply in this manner, the total output of the High-Voltage Supply is held relatively constant.

The output voltage levels of the High-Voltage Supply are controlled by the High Voltage Adjustment R1400 in the base circuit of Q1404. This adjustment sets the conduction of Q1404 to a level that establishes a –2450 volt operating potential at the CRT cathode.

Q1413 and Q1414 compose an overvoltage protection circuit. In the event the regulating action of the circuit should cause the CRT cathode supply to approach approximately –3000 volts, the voltage level at the emitter of Q1416 will be very close to –6 volts. Normally Q1413 and Q1414 are biased off and do not conduct. When the voltage level at the emitter of Q1416 reaches approximately –6 volts, Q1413 is biased into conduction which in turn biases Q1414 on. Q1414 now starts to reduce the base drive applied to Q1418 and prevents the amplitude of oscillations from increasing. This prevents the CRT cathode supply from going more negative than approximately –3000 volts.

High-Voltage Rectifiers and Output

The high-voltage transformer T1420 has two output windings. One winding provides filament voltage for the cathode-ray tube. The filament voltage can be supplied from the High-Voltage Supply, since the cathode-ray tube has a very low filament current drain. The cathode and filament of the CRT are connected together to elevate the filament and prevent cathode-to-filament breakdown. One high-voltage winding provides both the negative cathode potential and the positive anode accelerating voltage. The CRT grid bias voltage is derived by a DC restorer circuit that uses a sample of the signal in the high-voltage winding in conjunction with DC levels supplied by the Z-Axis Amplifier and the negative cathode potential.

The positive accelerating potential is supplied by High Voltage Multiplier U1432. Regulated output voltage is approximately +15,500 volts. The negative cathode potential is supplied by half-wave rectifier CR1241. Voltage output is –2450 volts. Voltage variations in this supply are monitored by the High-Voltage Regulator circuit to provide a regulated high-voltage output.

CRT Control Circuits

Focus of the CRT display is controlled by FOCUS control R1430. ASTIG adjustment R1445, which is used in conjunction with the FOCUS control to provide a well-defined display, varies the positive level on the astigmatism grid. Geometry adjustment R1442 varies the positive level on the horizontal deflection plate shields to control the overall geometry of the display.

Two adjustments control the trace alignment by varying the magnetic field around the CRT. Y Axis adjustment R1446 controls the current through L1446, which affects the CRT beam after vertical deflection, but before horizontal deflection. Therefore, it affects only the vertical (Y) components of the display. TRACE ROTATION adjustment R1440 controls the current through L1440 and affects both vertical and horizontal rotation of the beam.

Z-Axis Amplifier

The Z-Axis Amplifier circuit controls the CRT intensity level from several inputs. The effect of these input signals is to either increase or decrease the trace intensity, or to completely blank portions of the display. The input transistor Q1466 is a current-driven, low input impedance amplifier. It provides termination for the input signals as well as isolation between the input signals and the following stages. The current signals from the various control sources are connected to the emitter of Q1466 and the algebraic sum of the signals determines the collector conduction level.

Q1472, Q1474, and Q1478 compose a feedback amplifier stage; R1468 and R1469 are the feedback elements. C1469 and C1471 provide high frequency compensation. Q1472 is an emitter follower providing drive to complementary amplifier Q1474-Q1478. CR1468, CR1472, and CR1476 provide protection in the event of high-voltage arcing.

In the .1 s, .2 s, .5 s, and X-Y positions of the TIME/DIV switch, +5 volts is connected to the anode of CR1463. This limits the effective range of the INTENSITY control to reduce the unblanking capabilities of the amplifier, thereby reducing the possibility of inadvertently burning the CRT phosphor. When the BEAM FIND pushbutton is pressed, two things occur: First, +15 volts is applied to the anode of CR1465 which lifts the emitter of Q1466 sufficiently positive to ensure there will be no conduction through Q1466. Secondly, R1470 becomes connected to –8 volts through R1477 which establishes a fixed predetermined unblanking level at the output of the amplifier. Thus, the INTENSITY control and all of the input unblanking signals have no control over the intensity level of the CRT display when the BEAM FIND pushbutton is pressed.

DC Restorer Circuit

C1488, C1487, CR1487, CR1488, and R1486 form a DC restorer circuit. All DC levels in this circuit are

referenced to the negative potential of the CRT cathode. The voltage difference across R1486 approximately equals the voltage swing present at the junction of CR1482 and CR1483. The control grid end of R1486 is more negative than the end connected to CR1488. The amplitude of the voltage swings present at the junction of CR1482 and CR1483 is determined by the voltage levels established by the Z-Axis Amplifier and the CRT Bias adjust circuit. CR1483 sets the limit of the positive excursion and CR1482 sets the limit of the negative excursion.

CALIBRATOR

General

The Calibrator circuit produces a square-wave output signal with accurate voltage and current amplitudes. This output is available as a voltage or current at the CALIBRATOR current loop on the instrument front panel. Fig. 3-9 shows a detailed block diagram of the Calibrator circuit. A schematic of this circuit is shown on diagram 11 at the back of this manual.

Multivibrator

Q1590 and Q1594 along with their associated circuitry compose an astable multivibrator. The basic frequency of the multivibrator is approximately one kilohertz and is essentially determined by the RC combination of C1592, R1591, and R1593. Q1590 and Q1594 alternately conduct, producing a square-wave output signal, which is taken from the collector of Q1594. The amplitude of the square wave is limited in the negative direction by the base-emitter junction of Q1598 and in the positive direction by CR1596.

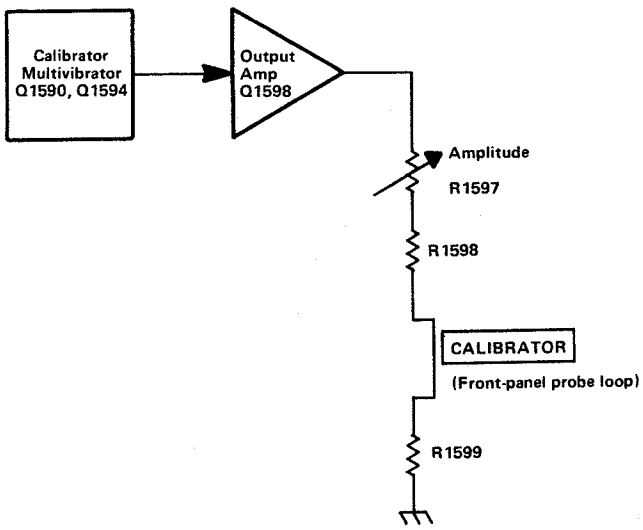

Fig. 3-9. Detailed block diagram of the Calibrator circuit.

Output Amplifier

The output signal from the Multivibrator overdrives Output Amplifier Q1598 to produce an accurate square wave at the output. When the base of Q1598 goes positive Q1598 is cut off and the collector level drops down to ground. When the base goes negative Q1598 is biased into saturation and the collector of Q1598 rises positive to about +5 volts. Amplitude adjustment R1597 adjusts the resistance between the collector of Q1598 and ground to determine the amount of current allowed to flow, which in turn determines the voltage developed across R1599.

A TRIGGER VIEW AMPLIFIER

General

The A Trigger View Amplifier circuit amplifies a sample of the signal present in the A Trigger Generator circuit and passes it on to the Vertical Output Amplifier for display on the CRT when the TRIG VIEW pushbutton is pressed. This provides a method of making a quick and convenient check of the signal being used to trigger the A Sweep Generator and is intended primarily to be used to check the signal applied to the A External Trigger Input connector. Fig. 3-10 shows a detailed block diagram of the A Trigger View Amplifier circuit. A schematic of this circuit is shown on diagram 11 at the back of this manual.

Amplifier

The amplifier consists of two emitter-coupled push-pull amplifier stages. The emitter source voltage for Q672 and Q682 is switched on and off by the TRIG VIEW pushbutton. With the TRIG VIEW pushbutton not pressed, the emitters of Q672 and Q682 are returned to −8 volts through R691. This reverse-biases the base-emitter junctions of the transistors, preventing any loading of the A Trigger Generator circuit. When the TRIG VIEW pushbutton is pressed, the emitters of Q672 and Q682 are returned to +15 volts through R690. This forward biases

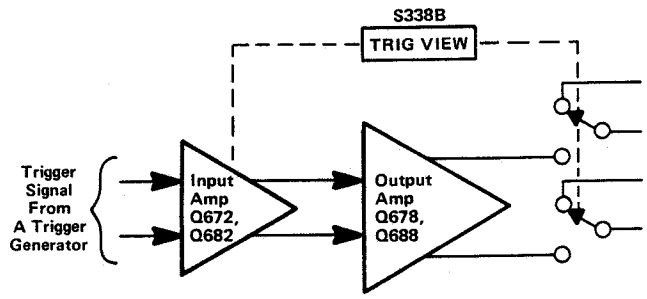

Fig. 3-10. Detailed block diagram of the Trigger View Amplifier.

Q672 and Q682 to allow signal amplification. R675 adjusts for correct DC balance in the circuit.

Normally, the output of the Vertical Switching Amplifier is applied to the input of the Delay Line. When the TRIG VIEW pushbutton is pressed, the signal from the Vertical Switching Amplifier is removed and the output from the A Trigger View Amplifier is applied in its place.

LOW-VOLTAGE POWER SUPPLY

General

The Low-Voltage Power Supply circuit provides the operating power for this instrument from four regulated supplies and one unregulated supply. Electronic regulation is used to provide stable, low-ripple output voltages. Fig. 3-11 shows a detailed block diagram of the Power Supply circuit. A schematic of this circuit is shown at the back of this manual.

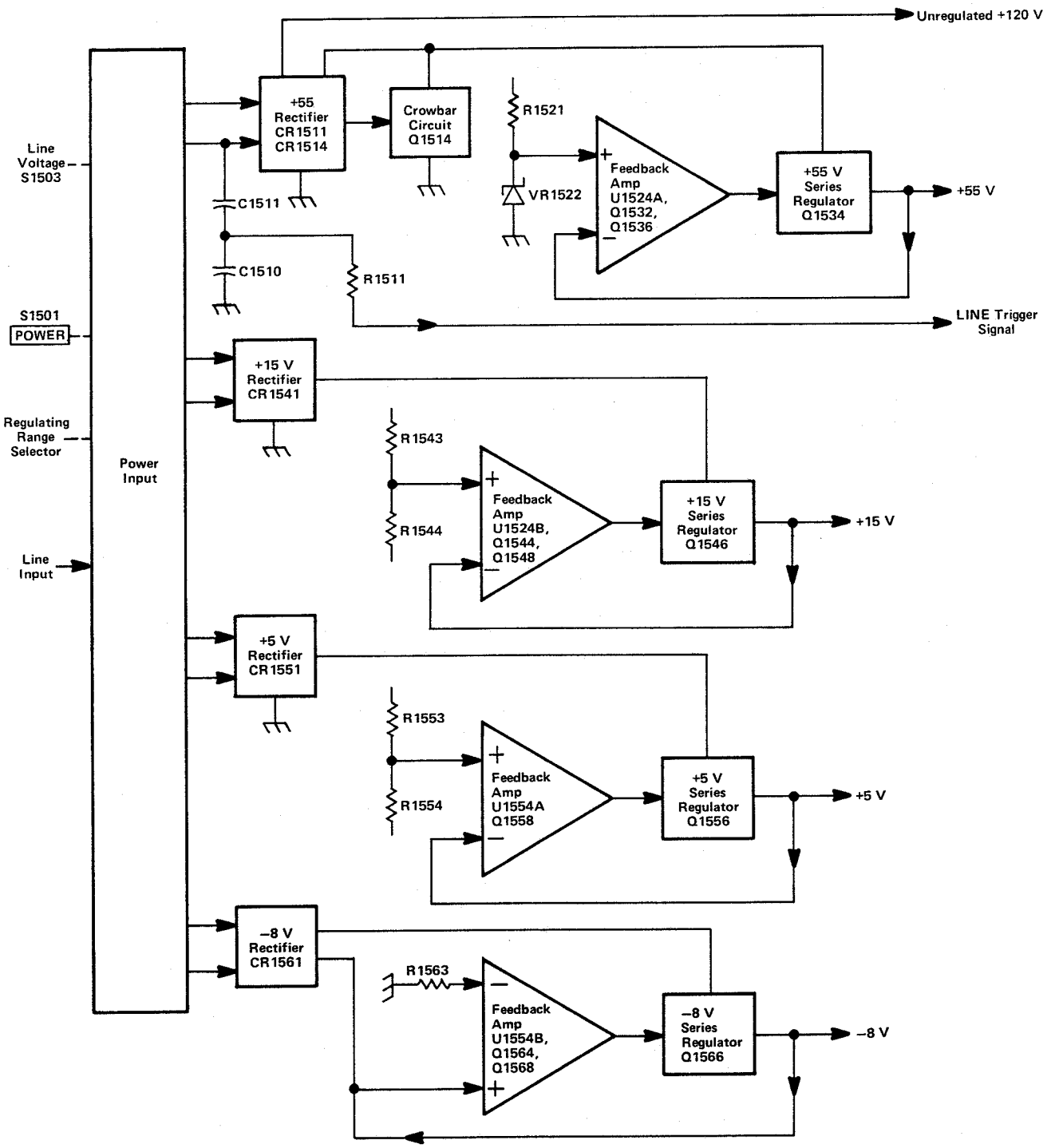

Fig. 3-11. Detailed block diagram of the Low Voltage Power Supply.

Power Input

Power is applied to the primary of transformer T1501 through Line Fuse F1501, POWER switch S1501, Thermal Cutout S1502, Line Voltage Selector switch S1503, and the Regulating Range Selector Assembly. Line Voltage Selector switch S1503 connects the split primaries of T1501 in parallel for 115-volt nominal operation, or in series for 230-volt nominal operation. Line Fuse F1501 should be changed to the correct value to provide the correct protection for each nominal line voltage (current rating of fuse for 230-volt operation is one-half the current rating of fuse for 115-volts).

The vacant windings between pins 10, 11, and 12 of T1501 are intended for use with the optional Inverter Circuit Board (Option 7). This allows the instrument to be operated from an external DC power source or an 1106 Power Supply.

Secondary Circuit

The −8 volt, +5 volt, +15 volt, and +55 volt supplies are series-regulated supplies. U1524A and B and U1554A and B are high-gain amplifier cells with differential inputs. These amplifiers monitor voltage variations in the output voltages.

For SN B080000 and up, a regulated +110 V supply is provided in addition to the unregulated +120 V supply. Both are derived from the terminal 14, 15, and 16 winding of T1501 and the full wave bridge rectifier CR1511. The +110 V regulated supply is referenced to the +55 V regulated supply via 56 V zener diode VR1515 and CR1514 to the base of series regulator transistor Q1516. Q1516 collector is fed from the +120 V supply through CR1516. R1516 shunts Q1516 to provide additional +110 V supply current. Q1518 provides short circuit protection by limiting the current through Q1516 during overload conditions.

Below SN B080000, the +120 V unregulated supply functions in place of the +110 V and +120 V supplies of later production. This +120 V supply includes SCR Q1514 to provide over-voltage protection for the various +120 V loads in the event of higher than specified line voltage levels. This Q1514 "Crowbar" circuit places a short across the T1501 secondary winding which will cause fuse F1501 to blow within 40 milliseconds if the line voltage exceeds the range selected on the T1501 primary taps. Fuse F1501 should always be replaced with the specified value to protect Q1514. If Q1514 is destroyed due to too high F1501 value, the +120 V supply can rise to about 160 V and possibly damage components in the +120 V load circuitry.

C1510, C1511, and R1511 compose a wave-shaping circuit that provides a sample of the AC voltage present in the secondary of T1501 to the trigger circuitry for use in the LINE positions of the Trigger SOURCE switches. CR1512 provides a relatively fast discharge path for C1542 when instrument power is turned off.

FAN MOTOR CIRCUIT

General

The fan motor used in the 465 is a brushless DC fan motor using Hall Effect devices. The fan motor circuitry varies the rotational speed of the fan with variations in operating temperature. When the ambient temperature increases, the value of thermistor RT1696 reduces. This biases Q1698 on harder to conduct more current through the Hall devices. Higher currents through the Hall devices causes the potential difference across them (for instance, between pins 6 and 8 of the fan) to increase. This potential difference biases one of a pair of transistors on and the other off. For instance, if pin 8 is more positive than pin 6 of the fan, Q1690A will be on and Q1690D will be off. The higher the potential difference between pin 8 and pin 6 the harder the on transistor will be conducting. The harder the transistor is conducting, the faster the fan rotates.

MAINTENANCE

Cabinet Removal

WARNING

Dangerous potentials exist at several points throughout this instrument. When the instrument is operated with the cover removed, do not touch exposed connections or components. Some transistors may have elevated cases. Disconnect power before cleaning the instrument or replacing parts.

The instrument wrap-around cabinet can be removed in the following manner:

1. Unwrap the power cord from the instrument feet.

2. Remove the six screws indicated in Fig. 4-1 and remove the instrument feet and rear ring assembly from the instrument.

3. Slide the wrap-around cabinet to the rear and remove the oscilloscope.

To replace the instrument in its wrap-around cabinet, reverse the removal procedure. The portable wrap-around cabinet should be installed with the carrying handle pivot points positioned toward the bottom of the instrument.

PREVENTIVE MAINTENANCE

General

Preventive maintenance consists primarily of cleaning and visual inspection. When performed on a regular basis, preventive maintenance can prevent instrument breakdown and will improve the reliability of this instrument. The severity of the environment to which the 465 is subjected will determine the frequency of maintenance. A convenient time to perform preventive maintenance is just prior to recalibration of the instrument.

Cleaning

General. The 465 should be cleaned as often as operating conditions require. Accumulation of dirt in the instrument can cause overheating and component breakdown. Dirt on components acts as an insulating blanket and prevents efficient heat dissipation. It also provides an electrical conduction path which can result in instrument failure.

The cabinet provides protection against dust in the interior of the instrument. Operation without the cabinet in place necessitates more frequent cleaning. The front cover provides a measure of dust protection for the front panel and the CRT face. The front cover should be installed when storing or transporting the instrument.

CAUTION

Avoid the use of chemical cleaning agents which might damage the plastics used in this instrument. Avoid chemicals which contain benzene, toluene, xylene, acetone or similar solvents. Recommended cleaning agents are isopropyl alcohol or Kelite (1 part Kelite, 20 parts water).

Switch Contacts. Most of the switching in the 465 is accomplished with circuit-board mounted, cam-actuated contacts. Care must be exercised to preserve the high-frequency characteristics of these switches. Seldom is switch maintenance necessary, but if it is required, observe the following precautions.

Cleaning the switch contacts should only be done using isopropyl alcohol or a solution of one part Kelite to 20 parts water. In the absence of these three cleaners it is safe to use petroleum ether, white kerosene, or a solution of 1% Joy detergent and 99% water. Do not use acetone, MEK, MIBK, benzol, toluol, carbon tetrachloride,

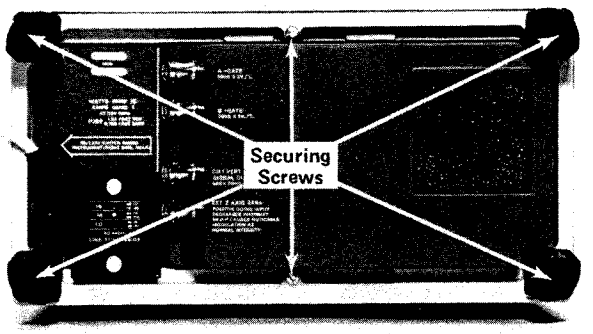

Fig. 4-1. Removing wrap-around cabinet.

trichlor, trichlene, methyl alcohol, methylene chloride, sulfuric acid, or Freon TC-TE-TF-22-TA-12.

Most spray circuit coolants and contact cleaners contain Freon 12 as a propellant. Because many Freons adversely affect the contacts, check the contents before using a spray cleaner or coolant. An acceptable contact cleaner-restorer is No Noise (Electronic Chemical). The only recommended circuit coolants are dry ice or isopropyl alcohol. There are three recommended switch lubricants. They are Silicone Versilube (General Electric Co.), Rykon R (Standard Oil, and WD-40 (Rocket Chemical Co.).

Exterior. Loose dust accumulated on the outside of the 465 can be removed with a soft cloth or small paint brush. The paint brush is particularly useful for dislodging dirt on and around the front-panel controls. Dirt which remains can be removed with a soft cloth dampened in a mild detergent and water solution. Abrasive cleaners should not be used.

CRT. Clean the blue and clear plastic light filters and the CRT face with a soft, lint-free cloth dampened with denatured alcohol or a mild detergent and water solution. The optional CRT mesh filter can be cleaned in the following manner.

1. Hold the filter in a vertical position and brush lightly with a soft No. 7 watercolor brush to remove light coatings of dust and lint.

2. Greasy residues or dried-on dirt can be removed with a solution of warm water and a neutral pH liquid detergent. Use the brush to lightly scrub the filter.

3. Rinse the filter thoroughly in clean water and allow to air dry.

4. If any lint or dirt remains, use clean low-pressure air to remove. Do not use tweezers or other hard cleaning tools on the filter as the special finish may be damaged.

5. When not in use, store the mesh filter in a lint-free dust-proof container such as a plastic bag.

Interior. Dust in the interior of the instrument should be removed occasionally due to its electrical conductivity under high-humidity conditions. The best way to clean the interior is to blow off the accumulated dust with dry, low-pressure air. Remove any dirt that remains with a soft paint brush or a cloth dampened with a mild detergent and water solution. A cotton-tipped applicator is useful for cleaning in narrow spaces or for cleaning circuit boards.

Lubrication

The fan motor and most of the potentiometers used in the 465 are permanently sealed and generally do not require periodic lubrication. The switches used in the 465, both cam- and lever-type, are installed with proper lubrication applied where necessary and will only rarely require any additional lubrication. It is recommended that a regular periodic lubrication program not be performed on any of the components used in the 465.

Transistor Checks

Periodic checks of the transistors and other semiconductors in the 465 are not recommended. The best check of semiconductor performance is actual operation in the instrument.

Recalibration

To assure accurate measurements, check the calibration of this instrument after each 1000 hours of operation or every six months if used infrequently. In addition, replacement of components may necessitate recalibration of the affected circuits. Complete calibration instructions are given in the Calibration section.

The calibration procedure can also be helpful in localizing certain troubles in the instrument. In some cases, minor troubles may be revealed or corrected by recalibration.

CORRECTIVE MAINTENANCE

General

Corrective maintenance consists of component replacement and instrument repair. Special techniques required to replace components in this instrument are given here.

Obtaining Replacement Parts

Standard Parts. All electrical and mechanical part replacements for the 465 can be obtained through your local TEKTRONIX Field Office or representative. However, many of the standard electronic components can be obtained locally in less time than is required to order them

from Tektronix, Inc. Before purchasing or ordering replacement parts, check the parts list for value, tolerance, rating, and description.

NOTE

When selecting replacement parts, it is important to remember that the physical size and shape of a component may affect its performance in the instrument, particularly at high frequencies. All replacement parts should be direct replacements unless it is known that a different component will not adversely affect instrument performance.

Special Parts. In addition to the standard electronic components, some special components are used in the 465. These components are manufactured or selected by Tektronix, Inc. to meet specific performance requirements, or are manufactured for Tektronix, Inc. in accordance with our specifications. These special components are indicated in the Electrical Parts List by an asterisk preceding the part number. Most of the mechanical parts used in this instrument have been manufactured by Tektronix, Inc. Order all special parts directly from your local TEKTRONIX Field Office or representative.

Ordering Parts. When ordering replacement parts from Tektronix, Inc., it is imperative that all of the following information be included in the order to ensure receiving the proper parts.

1. Instrument type.

2. Instrument serial number.

3. A description of the part (if electrical, include the circuit number).

4. TEKTRONIX Part number.

Soldering Techniques

WARNING

Always disconnect the instrument from the power source before attempting to solder in the instrument.

Ordinary 60/40 solder and a 35- to 40-watt pencil-type soldering iron can be used to accomplish the majority of the soldering to be done in the 465. If a higher wattage-rating soldering iron is used on the etched circuit boards, excessive heat can cause the etched circuit wiring to separate from the board base material.

CAUTION

The Vertical Preamplifier Attenuator circuit boards are made of material easily damaged by excessive heat. When soldering to these boards, do not use a soldering iron with a rating of more than approximately 15 watts. Avoid prolonged applications of heat to circuit-board connections. Use only isopropyl alcohol when cleaning this circuit board.

When soldering to the ceramic strips in the instrument a slightly larger soldering iron can be used. It is recommended that a solder containing about 3% silver be used when soldering to these strips to avoid destroying the bond to the ceramic material. This bond can be broken by repeated use of ordinary tin-lead solder or by the application of too much heat; however, occasional use of ordinary solder will not break the bond if excessive heat is not applied.

If it becomes necessary to solder in the general area of any of the high-frequency contacts in the instrument, clean the contacts immediately upon completion of the soldering. Refer to the section entitled Switch Contacts under PREVENTIVE MAINTENANCE for recommended cleaners and procedures.

Component Replacement

WARNING

Always disconnect the instrument from the power source before attempting to replace components.

Circuit Board Replacement. Occasionally it may be necessary to gain access to the reverse side of a circuit board or to remove one circuit board to gain access to another. The following procedures outline the necessary steps to facilitate instrument disassembly. Most of the connections to the circuit boards in the instrument are made with pin connectors. However, some connections are soldered to the board. Observe the soldering precautions given under Soldering Techniques in this section.

Vertical Preamp Assembly Removal.

1. Remove the instrument wrap-around cabinet in the manner given under Cabinet Removal earlier in this section.

2. Remove the knobs from the VOLTS/DIV switches and from the Input Coupling Switches. The knobs on the VOLTS/DIV switches must have a setscrew in each one loosened (using a 1/16" Allen wrench) before they can be removed, while the knobs on the Input Coupling switches can be pulled off by hand.

3. Disconnect the vertical POSITION control shaft couplers from the vertical POSITION potentiometers (.050" Allen wrench required).

4. Remove the two UNCAL light lenses. Pry them away from the front panel with a fingernail and pull them straight out.

5. Disconnect the following cables from the Vertical Preamp circuit board:

a. Nine coaxial cables (five on the front and four on the back). Make note of cable color-codes to insure proper installation during reassembly.

b. A six-wire ribbon cable that connects to the Interface board (P300).

c. The delay-line that connects to the Vertical Output Amplifier.

d. An eight-wire ribbon cable that plugs onto the Vertical Mode Switch circuit board (P390).

6. Remove the covers from the attenuators.

7. Unsolder the leads to both input coupling capacitors. Remove the capacitors by unplugging them from the attenuator circuit boards.

8. Remove the four nuts securing the attenuator chassis to the instrument front casting (1/4" nutdriver required).

9. Remove the circuit board hold down screw on the Vertical Mode Switch circuit board (accessible through a hole in the Vertical Preamp circuit board near the Channel 1 POSITION potentiometer; pozidrive screwdriver required).

10. Remove three circuit board hold down screws from the Vertical Preamp circuit board (two at the rear and one below the Channel 2 POSITION potentiometer).

11. Remove the Vertical Preamp, cam switch assembly, and Vertical Mode Switch circuit board as a unit. Pull the rear of the Vertical Preamp circuit board outward about one or two inches; then slide the whole assembly to the rear until the front-panel control shafts clear the front casting.

To reinstall the Vertical Preamp assembly, reverse the order of the removal steps. To align the VERT MODE switch pushbuttons, hold the assembly in place with a slight forward pressure and use some sort of small tool to reach through the front panel to align the buttons. Install the remaining parts in the reverse order they were removed. Do not tighten the circuit board hold down screws until the securing nuts at the front of the attenuator chassis are tight and the circuit board is aligned properly.

Trigger Circuit Board Removal.

1. Remove the LOW LINE, READY, and TRIG light lenses from the front panel. Pry them away from the front panel with a fingernail and pull straight out.

2. Disconnect the following cables:

a. Eight coaxial cables (five on the front and three on the back; two on the front will have to be unsoldered). Make note of cable color-codes to ensure proper installation during reassembly.

b. Three ribbon cables (two five-wire and one two-wire) from the Trigger Generator & Sweep Logic circuit board (P530, P630, and P1040).

3. Unsolder the two wires from the circuit board that run to the A TRIG HOLDOFF control and the two connections to the External Trigger Input connectors. Make note of wire color-codes to ensure proper installation during reassembly.

4. Remove the POWER switch actuator rod from the plastic holder on the switch. Pry the rod out of the holder with a small flat-bladed screwdriver.

5. Remove the POWER switch bracket from the circuit board (1/4" wrench or nutdriver required).

6. Remove five mounting screws from the circuit board (two at rear, two at front, and one at center-top; pozidrive screwdriver required).

7. Unplug the Trigger Generator & Sweep Logic circuit board from the Interface Board by forcing the Trigger board away at the two white interboard connectors at the bottom edge of the Trigger board.

8. Move the Trigger board to the rear until the Trigger switches clear the front casting and then remove the assembly from the instrument. Exercise caution to avoid damaging the connector pins on the Interface Board.

To reinstall the Trigger Generator & Sweep Logic circuit board, reverse the order of the removal steps. If the indexing of the Trigger switches was disturbed, a series of

trial-and-error installation-removal-adjustment steps will be necessary to return them to correct alignment.

Sweep Timing Circuit Board Removal.

1. Remove the Trigger Generator & Sweep Logic circuit board as outlined above.

2. Unsolder four wires from the Timing circuit board. Make note of wire color-codes to ensure proper installation during reassembly.

3. Remove the knobs from the VAR TIME/DIV control and the A AND B TIME/DIV switches (1/16" Allen wrench required). Be careful not to lose the plastic bushing behind the knobs.

4. Remove the X10 MAG and the UNCAL light lenses. Pry them away from the instrument front panel with a fingernail and pull straight out.

5. Remove the four Interface board mounting screws that are nearest the Sweep Timing circuit board.

6. Remove the board mounting screw and the hex rod from the Sweep Timing circuit board (3/16" wrench or nutdriver required).

7. Use a flat blade screwdriver and pry the Timing Board away from the Interface Board. Gently pull away the corner of the Interface Board near the B External Trigger Input connector and simultaneously lift up on the Timing Board near the rear to fully disengage connector pins from the Interface Board.

To reinstall the Timing Board reverse the order of the removal steps.

Power Transformer Replacement. Be sure to replace only with a direct replacement TEKTRONIX transformer. After the transformer is replaced check the performance of the complete instrument. The transformer is removed as follows:

1. Unsolder the power cord from the Interface Board, the Regulating Range Selector Assembly, and the solder lug on the rear subpanel.

2. Remove the small blue panel from the rear panel of the instrument. It will be necessary to remove the cover from the Regulating Range Selector Assembly and the two feet from that side of the instrument.

3. Remove the actuating shaft from the POWER switch coupler. Exercise caution so as not to damage the switch coupler.

4. Remove the POWER switch mounting bracket from the Trigger Board.

5. Unsolder the transformer leads from the Interface Board and the solder lug on the rear subpanel. Note the wire color codes to facilitate correct reinstallation.

6. Remove the transformer leads from the Regulating Range Selector Assembly. It will be necessary to use a special pin removing tool available under TEKTRONIX part number 003-0707-00. It is only necessary to use this tool to remove the transformer leads from the Selector Assembly. The leads may be reinstalled by simply pushing them into place. Note wire color codes to facilitate correct reinstallation.

7. Remove the transformer bracket mounting hardware. This includes two screws on the Trigger Board, one screw on the Interface Board, two nuts on the U-channel (one on the transformer side and one on the CRT side), and two screws and nuts on the rear subpanel.

8. Thoroughly loosen the Trigger Board and remove the transformer assembly from the instrument.

9. Remove the thermal cutout and POWER switch from the old transformer and install on the new transformer. Note wire color codes to facilitate correct installation.

10. Install the new transformer assembly in the instrument reversing the order of the removal steps.

Recalibration After Repair

After any electrical component has been replaced, the calibration of that particular circuit should be checked, as well as the calibration of other closely related circuits. Since the power supply affects all circuits, calibration of the entire instrument should be checked if work has been done in the power supply or if the transformer has been replaced.

Instrument Repackaging

If the Tektronix instrument is to be shipped to a Tektronix Service Center for service or repair, attach a tag showing: owner (with address) and the name of an individual at your firm that can be contacted, complete instrument serial number and a description of the service required.

Save and re-use the package in which your instrument was shipped. If the original packaging is unfit for use or not available, repackage the instrument as follows:

1. Obtain a carton of corrugated cardboard having inside dimensions of no less than six inches more than the instrument dimensions; this will allow for cushioning. Refer to the following table for carton test strength requirements.
2. Surround the instrument with polyethylene sheeting to protect the instrument.
3. Cushion the instrument on all sides by tightly packing dunnage or urethane foam between carton and instrument, allowing three inches on all sides.
4. Seal carton with shipping tape or industrial stapler.

SHIPPING CARTON TEST STRENGTH

Gross Weight (lb	Carton Test Strength (lb)
0-10	200
10-30	275
30-120	375
120-140	500
140-160	600

CALIBRATION

Calibration Interval

To assure instrument accuracy, check the calibration of the 465 every 1000 hours of operation, or every six months if used infrequently. Before complete calibration, thoroughly clean and inspect this instrument as outlined in the Maintenance section of the manual.

TEKTRONIX Field Service

Tektronix, Inc. provides complete instrument repair and recalibration at local Field Service Centers and the Factory Service Center. Contact your local TEKTRONIX Field Office or representative for further information.

Using This Procedure

Index. To aid in locating a step in the Performance Check or Calibration procedure, an index is given preceding Part I—Performance Check and Part III—Calibration procedure.

Performance Check. The performance of this instrument can be checked without removing the covers or making internal adjustments, by performing only Part I—Performance Check. This procedure does not check every facet of the instrument's calibration; rather it is concerned primarily with those portions of the instrument essential to measurement accuracy and correct operation.

Short-Form Calibration. A short-form calibration procedure is provided to the technician experienced with the 465 as guidelines for calibration of this instrument, in Part II—Short-Form Calibration.

Calibration Procedure. Completion of each step in Part III—Calibration procedure, ensures that this instrument meets the electrical specifications given in the front of this manual. Where possible, instrument performance is checked before an adjustment is made. For best overall instrument performance when performing a complete calibration procedure, make each adjustment to the exact setting even if the CHECK- is within the allowable tolerance.

Partial Procedures. A partial check or adjustment is often desirable after replacing components or to touch up the adjustment of a portion of the instrument between major recalibrations. To check or adjust only part of the instrument, set the controls as given under the nearest Control Settings and use the Equipment Required list preceding the desired portion of the step. To prevent unnecessary recalibration of other parts of the instrument, readjust only if the tolerance given in the CHECK- part of the step is not met. If readjustment is necessary, also check the calibration of any steps listed in the INTERACTION- part of the step.

TEST EQUIPMENT REQUIRED

General

The following test equipment and accessories, or its equivalent, is required for complete calibration of the 465. Specifications given for the test equipment are the minimum necessary for accurate calibration. Therefore, some of the specifications listed here may differ from the actual performance capabilities of the test equipment. All test equipment is assumed to be correctly calibrated and operating within the listed specifications. Detailed operating instructions for the test equipment are not given in this procedure. Refer to the instruction manual for the test equipment if more information is needed.

If only a Performance Check procedure or a Calibration procedure is performed, not all of the listed test equipment will be required. Items used only for the Part III—Calibration procedure are indicated by footnote 1. The remaining pieces of equipment are items common to both a Performance Check procedure and a Calibration procedure.

Special Calibration Fixtures

Special TEKTRONIX calibration fixtures are used only where they facilitate instrument calibration. These special calibration fixtures are available from Tektronix, Inc. Order by part number through your local TEKTRONIX Field Office or representative.

Calibration Equipment Alternatives

All of the listed test equipment is required to completely check and calibrate this instrument. However, complete checking or calibration may not always be necessary or desirable. The user may be satisfied with checking only selected characteristics, thereby reducing the amount of test equipment actually required.

The Performance Check and Calibration procedure are based on the first item of equipment given as an example of

applicable equipment. When other equipment is substituted, control settings or calibration setup may need to be altered to meet the requirements of the substitute equipment. If the exact item of test equipment given as an example in the Test Equipment list is not available, first check the Specifications column carefully to see if any other equipment is available which might suffice. Then check the Usage column to see what this item is used for. If used for a check or adjustment which is of little or no importance to your measurement requirements, the item and corresponding step(s) can be deleted.

TABLE 5-1

Test Equipment Required

Description	Minimum Specifications	Usage	Examples of Applicable Test Equipment
1. Variable Autotransformer[1]	Capable of supplying 120 Volt-Amperes over a range of 103.5 to 126.5 volts.	Power Supply adjustment.	a. General Radio W10MT3W Variac Autotransformer.
2. Precision DC Voltmeter[1]	Range, zero to 100 volts; accuracy, within ±0.05%.	Low voltage power supply check and adjustment.	a. Fluke Model 825A Differential DC Voltmeter.
3. DC Voltmeter (VOM)[1]	Range, zero to 2500 volts; accuracy, within 3%.	High voltage check and adjustment.	a. Triplett Model 630-NA. b. Simpson Model 262.
4. Test Oscilloscope[1]	Bandwidth, DC to 100 megahertz; minimum deflection factor, five millivolts/division; accuracy, within 3%.	Power supply checks, Z-Axis compensation; Vertical Gain adjustments; A Trigger Holdoff check; A & B Gate checks.	a. TEKTRONIX 465 Oscilloscope with two P6065A probes.
5. Time-Mark Generator	Marker outputs, 5 nanoseconds to 0.5 second; marker accuracy, within 0.1%.	CRT geometry; Horizontal deflection system timing checks and adjustments.	a. TEKTRONIX 2901 Time-Mark Generator. b. TEKTRONIX 184 Time-Mark Generator.
6. Standard Amplitude Calibrator	Amplitude accuracy, within 0.25%; signal amplitude, 5 millivolts to 50 volts; output signal, one-kilohertz square-wave and positive DC voltage.	Vertical deflection system checks. Trigger View deflection factor check.	a. TEKTRONIX calibration fixture Part Number 067-0502-01.
7. Fast-Rise, High-Amplitude Pulse Generator	Risetime, 0.25 nanoseconds or less; repetition rate, 550 to 720 pulses/second; amplitude, variable from 20 millivolts to 10 volts.	Vertical deflection system checks.	a. TEKTRONIX Type 109 Pulse Generator with Type 113 Charge Line.
8. High-Frequency Constant Amplitude Signal Generator	Frequency, 65 megahertz to above 150 megahertz; reference frequency, three megahertz; output amplitude, variable from 0.5 volt to 4 volts; amplitude accuracy, within 1%.	Vertical system bandwidth checks.	a. TEKTRONIX calibration fixture 067-0532-01.
9. Medium-Frequency Constant-Amplitude Signal Generator	Frequency, 350 kilohertz to 100 megathertz; reference frequency, 50 kilohertz; output amplitude, variable from 5 millivolts to 5 volts into 50 ohms or 10 volts unterminated; amplitude accuracy within 3%.	Vertical system bandwidth and trigger circuits operation checks. X-Y phasing check.	a. TEKTRONIX 191 Constant-Amplitude Signal Generator. b. General Radio 1211-C with 1263-C Amplitude Regulating Power Supply.

TABLE 5-1 (cont)

Description	Minimum Specifications	Usage	Examples of Applicable Test Equipment
10. Low-Frequency Constant-Amplitude Signal Generator	Frequency, 10 hertz to 100 kilohertz; output amplitude, variable from 0.5 volt to 40 volts peak-to-peak; amplitude accuracy, within 3%.	Low Frequency triggering checks.	a. General Radio 1310-A Oscillator.
11. Square-Wave Generator	Frequency, 10 hertz to one megahertz; risetime, one nanosecond or less from fast-rise output; output amplitude, about 120 volts unterminated or 12 volts into 50 ohms.	Vertical deflection system compensation checks.	a. TEKTRONIX Type 106 Square-Wave Generator.
12. Signal Pickoff	Connectors, GR874 thru-signal connectors and BNC signal-pickoff connector.	Trigger system checks and adjustments.	a. TEKTRONIX Part Number 017-0061-00.
13. Cable (two required)	Impedance, 50 ohms; type, RG-58/U; length, 42 inches; connectors, BNC.	Used for signal interconnection.	a. TEKTRONIX Part Number 012-0057-01.
14. Cable	Impedance, 50 ohms; type, RG-58/U; length 18 inches; connectors, BNC.	Used for signal interconnection.	a. TEKTRONIX Part Number 012-0076-00.
15. Cable	Impedance, 50 ohms; type, RG 213; electrical length, 5 nanoseconds; connectors, GR874.	Used for signal interconnection.	a. TEKTRONIX Part Number 017-0502-00.
16. T-Connector	Connectors, BNC.	Used for signal interconnection.	a. TEKTRONIX Part Number 103-0030-00.
17. Dual-Input Coupler (two required)	Connectors, BNC; matched signal transfer to each input.	Used for signal interconnection.	a. TEKTRONIX calibration fixture 067-0525-00.
18. Input Normalizer	RC time constant, 20 picofarads times 1 megaohm.	Standardize input RC time constant.	a. TEKTRONIX Part Number 067-0538-00.
19. Attenuator (two required)	Attenuation ratio, X10; connectors, BNC; impedance, 50 ohms.	Vertical amplifier compensation and trigger checks and adjustments.	a. TEKTRONIX Part Number 011-0059-01.
20. Attenuator	Attenuation ratio, X2; connectors, BNC; impedance, 50 ohms.	Trigger checks and adjustments.	a. TEKTRONIX Part Number 011-0069-01.
21. Adapter	BNC female connector to GR connector.	Used for signal interconnection.	a. TEKTRONIX Part Number 017-0063-00.
22. Termination (two required)	Impedance, 50 ohms; accuracy, within 3%; connectors, BNC.	Bandwidth checks.	a. TEKTRONIX Part Number 011-0049-01.
23. Screwdriver	Three-inch shaft; 3/32-inch bit.	Used throughout procedure to adjust variable resistors.	a. TEKTRONIX Part Number 003-0192-00.
24. Low-Capacitance Screwdriver	1 1/2-inch shaft.	Used throughout procedure to adjust variable capacitors.	a. TEKTRONIX Part Number 003-0000-00.

Preliminary Control Settings

Preset the instrument controls to the settings given below when starting a Performance Check or a Calibration procedure.

Power Controls

Regulating Range Selector	Medium
Line Voltage Selector	115 V
POWER	ON

CRT Controls

INTENSITY	Midrange
FOCUS	Midrange
SCALE ILLUM	Midrange
BEAM FIND	Off (button out)

Vertical Controls (both Channels if applicable)

VOLTS/DIV	5 mV
VAR	Calibrated detent
POSITION	Midrange
Input Coupling	DC
VERT MODE	CH 1
INVERT	Off (out)
20 MHz BW (Pull)	Off (in)

Triggering Controls (both A and B if applicable)

LEVEL	Fully clockwise
SLOPE	+
COUPLING	AC
SOURCE	NORM
TRIG MODE	AUTO

Sweep Controls

HORIZ DISPLAY	A
DELAY TIME POSITION	Fully counterclockwise
A TIME/DIV	1 ms
B TIME/DIV	1 ms
VAR TIME/DIV	Calibrated detent
X10 MAG	Off (button out)
POSITION	Midrange
FINE (Position)	Midrange
A TRIG HOLDOFF	NORM (ccw)

PART I - PERFORMANCE CHECK

Introduction

The following procedure is intended to be used for incoming inspection to determine the acceptability of newly purchased or recently recalibrated instruments. This procedure does not check every facet of the instrument's calibration; rather it is concerned primarily with those portions of the instrument which are essential to measurement accuracy and correct operation. Removing the instrument's dust cover is not necessary to perform this procedure. All checks are made from the front panel.

Index to Part I - Performance Check

VERTICAL SYSTEM CHECK

1. Check Beam Finder Operation — Page 5-6
2. Check Channel 1 and 2 Step Attenuator Balance — Page 5-6
3. Check Channel 1 and 2 Variable Volts/Division Balance — Page 5-6
4. Check Channel 2 Inverted Balance — Page 5-7
5. Check Channel 1 and 2 Position Range — Page 5-7
6. Check Channel 1 and 2 Gain — Page 5-7
7. Check Add Mode Operation — Page 5-7
8. Check Channel 1 and 2 Deflection Accuracy — Page 5-7
9. Check Channel 1 and 2 Variable Volts/Division Range — Page 5-8
10. Check Alternate Mode Operation — Page 5-8
11. Check Chop Mode Operation — Page 5-8
12. Check Low-Frequency Compensation — Page 5-8
13. Check Channel 1 and 2 Volts/Division Compensation — Page 5-9
14. Check Channel 2 High-Frequency Compensation — Page 5-9
15. Check Channel 1 High-Frequency Compensation — Page 5-9
16. Check Vertical Amplifier Bandwidth — Page 5-10
17. Check Cascaded Gain and Bandwidth — Page 5-10

TRIGGER SYSTEM CHECK

18. Check A Triggering — Page 5-11
19. Check B Triggering — Page 5-11
20. Check A Normal Mode Operation — Page 5-12
21. Check Single Sweep Operation — Page 5-12
22. Check Trigger View Operation — Page 5-12

HORIZONTAL SYSTEM CHECK

23. Check Differential Time Accuracy — Page 5-13
24. Check A Variable Time/Division Range — Page 5-13
25. Check A and B Timing Accuracy — Page 5-13
26. Check Delay Time Accuracy — Page 5-14
27. Check Delay Time Jitter — Page 5-14
28. Check Mixed Sweep Accuracy — Page 5-15
29. Check X Gains — Page 5-15
30. Check X-Y Phasing and Bandwidth — Page 5-15

Preliminary Procedure for Performance Check

NOTE

The performance of this instrument can be checked at any temperature within the 0°C to +40°C (+32°F to +104°F) temperature range unless stated otherwise.

1. Connect the 465 to a power source which meets the voltage and frequency requirements of this instrument.

2. Set the controls as given under Preliminary Control Settings.

3. Allow at least 20 minutes warmup before proceeding.

VERTICAL SYSTEM CHECK

Equipment Required

1. Standard Amplitude Calibrator
2. Square-Wave Generator (Type 106)
3. High-Frequency Constant-Amplitude Signal Generator (067-0532-01)
4. Medium-Frequency Constant-Amplitude Signal Generator (Type 191)
5. Fast-Rise High-Amplitude Pulse Generator (Type 109)
6. 42-Inch 50 Ω BNC cable (two)
7. GR-to-BNC Female Adapter
8. 50 Ω BNC Termination
9. 20 Pf RC Input Normalizer
10. X10 BNC Attenuator
11. Dual-Input Coupler

Control Settings

Preset instrument controls to the settings given under Preliminary Control Settings.

1. Check Beam Finder Operation

a. Position the trace off screen with CH 1 POSITION control.

b. Push the BEAM FIND button and hold it in.

c. CHECK—That the trace is compressed and brought into the CRT viewing area.

d. Release the BEAM FIND button.

2. Check Channel 1 and 2 Step Attenuator Balance

a. Set both VOLTS/DIV switches to 20 mV and both Input Coupling switches to GND.

b. Position the trace to the center horizontal line with the CH 1 POSITION control.

c. CHECK—Rotate the CH 1 VOLTS/DIV switch from 20 mV to 5 mV. Trace should not move more than 0.2 division vertically between adjacent switch positions.

d. Set the VERT MODE switch to CH 2.

e. Position the trace to the center horizontal line with the CH 2 POSITION control.

f. CHECK—Rotate the CH 2 VOLTS/DIV switch from 20 mV to 5 mV. Trace should not move more than 0.2 division vertically between adjacent switch positions.

3. Check Channel 1 and 2 Variable Volts/Division Balance

a. Position the trace to the center horizontal line with the CH 2 POSITION control.

b. Rotate the CH 2 VAR control through its range.

c. CHECK—That the CH 2 UNCAL light comes on when the VAR control is out of the detent position.

d. CHECK—CRT display for 1.0 division or less of vertical trace shift when rotating the CH 2 VAR control through its range.

e. Set the VERT MODE switch to CH 1.

f. Position the trace to the center horizontal line with the CH 1 POSITION control.

g. Rotate the CH 1 VAR control through its range.

h. CHECK—That the CH 1 UNCAL light comes on when the VAR control is out of the detent position.

i. CHECK—CRT display for 1.0 division or less of vertical trace shift when rotating the CH 1 VAR control through its range.

j. Return both VAR controls to the detent position.

4. Check Channel 2 Inverted Balance

a. Set the VERT MODE switch to CH 2, and the CH 2 Input Coupling switch to GND.

b. Position the trace to the center horizontal line with the CH 2 POSITION control.

c. Push the INVERT switch.

d. CHECK—Trace does not vertically shift more than 2 divisions when switching from normal to inverted.

5. Check Channel 1 and 2 Position Range

a. Connect the Standard Amplitude Calibrator output to the CH 1 and CH 2 inputs via a 42-inch 50 Ω BNC cable and a dual input coupler.

b. Set both VOLTS/DIV switches to 20 mV and both Input Coupling switches to AC.

c. Adjust the Standard Amplitude Calibrator for a 500 mV output.

d. CHECK—That the top of the CRT display can be positioned down to 1/2-division above the center horizontal graticule line and the bottom of the display can be positioned up to 1/2-division below the center horizontal graticule line.

e. Set the VERT MODE switch to CH 1.

f. CHECK—That the top of the CRT display can be positioned down to 1/2-division above the center horizontal graticule line and the bottom of the display can be positioned up to 1/2-division below the center horizontal graticule line.

6. Check Channel 1 and 2 Gain

a. Set both VOLTS/DIV switches to 5 mV.

b. Set the Standard Amplitude Calibrator for a 20 mV square-wave output.

c. CHECK—CRT display for four divisions of deflection within 0.12 divisions.

d. Set the VERT MODE switch to CH 2.

e. CHECK—CRT display for four divisions of deflection within 0.12 divisions.

7. Check Add Mode Operation

a. Set both Input Coupling switches to DC.

b. Set the Standard Amplitude Calibrator for a 10 mV output.

c. Set the VERT MODE switch to ADD.

d. CHECK—CRT display for four divisions, ±0.12 division, in amplitude.

8. Check Channel 1 and 2 Deflection Accuracy

a. Set the VERT MODE switch to CH 1.

b. Set the CH 2 Input Coupling switch to GND.

c. CHECK—Using the CH 1 VOLTS/DIV switch and the Standard Amplitude Calibrator settings given in Table 5-2, check that the vertical deflection factor accuracy is within 3% in each position of the CH 1 VOLTS/DIV switch.

TABLE 5-2

Vertical Deflection Accuracy

VOLTS/DIV Switch Setting	Standard Amplitude Calibrator Output	Vertical Deflection in Divisions	Maximum Error for 3% Accuracy
5 m	20 millivolts	4	Previously Checked
10 m	50 millivolts	5	±0.15 division
20 m	0.1 volt	5	±0.15 division
50 m	0.2 volt	4	±0.12 division
0.1	0.5 volt	5	±0.15 division
0.2	1 volt	5	±0.15 division
0.5	2 volts	4	±0.12 division
1	5 volts	5	±0.15 division
2	10 volts	5	±0.15 division
5	20 volts	4	±0.12 division

17. Adjust CH 2 Gain

a. CH 2 VOLTS/DIV to 5 mV

b. Connect 20 mV signal from Standard Amplitude Calibrator to CH 2 input.

c. ADJUST—CH 2 Gain, R218, for exactly 4 divisions of deflection.

d. Check all attenuator ranges for proper deflection, within 3%.

e. Check Variable Range: CH 2 VAR control must reduce a 5 division signal to less than 2 divisions.

18. Check ADD Operation

a. Both VOLTS/DIV to 5 mV
Both INPUT COUPLING switches to DC

b. Connect 10 mV from Standard Amplitude Calibrator to both CH inputs.

c. Set VERT MODE to ADD.

d. CHECK—If CH 1 and CH 2 Gains were adjusted, check for 4 divisions of deflection, within 1% (within 3% if CH 1 and CH 2 Gains were not adjusted).

19. Check Compression and Expansion

a. With 2 division signal, position to top and bottom of graticule.

b. Check for no more than 0.1 division of compression or expansion.

20. Check Vertical ALTernate Operation On All Sweep Speeds

21. Check Vertical CHOP Operation

a. TIME/DIV to 1 μs
VERT MODE to CHOP

b. Check for blanking of transients at normal INTENSITY level.

c. Check duration of each cycle is about 4 divisions.

22. Adjust Vertical Output Low-Frequency Compensation

a. Connect the fast-rise output of the Square-Wave Generator (Type 106) to CH 1 input.

b. ADJUST—R424, R433, R434 for best flat-top waveform using 1 kHz, 10 kHz, and 100 kHz signals.

23. Adjust VOLTS/DIV Compensation

a. Adjust CH 1 VOLTS/DIV Compensation for no more than 2% aberrations. Use 20 picofarad Normalizer and a 5 division signal.

5 mV	C1
10 mV	Check
20 mV	Check
50 mV	C12, C13
.1 V	Check
.2 V	Check
.5 V	C10, C11
1 V	Check
2 V	Check
5 V	Check

b. Repeat procedure for CH 2.

24. Adjust Vertical Output High-Frequency Compensation

a. VOLTS/DIV to 5 mV
A TIME/DIV to 0.05 μs

b. Adjust for a 5 division display from the Fast-Rise High-Amplitude Pulse Generator (Type 109) to CH 2 input.

c. ADJUST—C77, C83, C205, R205, C249, R249, C403, C442, R442, C443, for no more than 3% aberrations and a 3.5 nanosecond, or less, risetime.

d. Check negative step aberrations, within 5%.

e. CH 2 VOLTS/DIV to 10 mV

f. ADJUST—R97, C97, for aberrations within 3% and 3.5 nanosecond, or less, risetime.

g. Check negative step aberrations, within 5%.

h. CH 2 VOLTS/DIV to 20 mV

i. ADJUST—R98, C98, for aberrations within 3% and 3.5 nanosecond, or less, risetime.

j. Check negative step aberrations, within 5%.

k. Check remaining settings of CH 2 VOLTS/DIV switch for: Positive step aberrations within 3%; risetime of 3.5 nanoseconds, or less; negative step aberrations within 5%.

l. Check position effect: Positive step aberrations within 5%, negative step aberrations within 7%.

25. Adjust CH 1 High-Frequency Compensation

a. Repeat step 24-c with adjustments C27, C33, C105, R105, C122, R122, C149, and R149.

b. Adjust R47, C47 for step 24-f.

c. Adjust R48, C48 for step 24-i.

26. Check Vertical Amplifier Bandwidth

a. Use the High-Frequency Constant-Amplitude Signal Generator (067-0532-01): 5 division display of 3 MHz reference signal.

b. From 5 mV to 5 V settings of both VOLTS/DIV switches, check frequency is at least 100 MHz (0°C to +40°C) when display is reduced to 3.5 division.

27. Check Cascaded Bandwidth and Sensitivity

a. Connect CH 1 OUT to CH 2 input through a terminated cable.

b. Check that the sensitivity is at least 1 mV/division.

c. Check Bandwidth is at least 50 MHz.

28. Check Vertical Channel Isolation and CMRR

a. Channel isolation: at least 100:1 at 25 MHz.

b. CMRR: at least 10:1 at 20 MHz for signals of 6 divisions or less.

29. Check Bandwidth Limit Operation

a. Connect 6 division display of a 50 kHz signal to CH 1 input.

b. Check frequency is 20 MHz, within 4 MHz, when display is reduced to 4.2 divisions.

TRIGGER SYSTEM CALIBRATION

30. Adjust A and B Trigger Sensitivity

a. VOLTS/DIV to 10 mV

both TIME/DIV to 0.05 μs

A SOURCE to EXT

A COUPLING to AC

A SLOPE to +

b. Connect the output of the Medium-Frequency Constant-Amplitude Signal Generator (Type 191) to the A and B External Trigger Inputs via a 50 Ω 5 ns GR cable, 50 Ω Signal Pickoff thru output, GR-to-BNC adapter, X10 attenuator, 50 Ω termination, and a dual input coupler.

c. Connect the 10% BNC output connector of the Signal Pickoff Unit to the CH 1 and CH 2 inputs via a terminated dual input coupler.

d. ADJUST—A and B Sensitivity, R655, R555, to just obtain a stable display with a five division display of 25 MHz signal.

31. Adjust LEVEL and SLOPE Centering

a. Position 0.3 division display of 50 kHz signal to center vertical graticule line.

b. ADJUST—A Level Center, R635, for triggered display.

c. ADJUST—A Slope Center, R645, so trigger point is the same when switching from + to − slope.

d. ADJUST—B Level Center, R535, for triggered display.

e. ADJUST—B Slope Center, R545, so trigger point is the same when switching from + to – slope.

32. Adjust A Trigger DC Levels

a. A COUPLING to DC

A SOURCE to NORM

A LEVEL to 0

b. 0.3 division display centered vertically on the CRT graticule.

c. ADJUST—Normal Trigger DC Level, R340, to obtain stable display in + and – slopes.

d. A SOURCE to CH 1

e. ADJUST—CH 1 Trigger DC Level, R155, to obtain stable display in + and – slopes.

f. VERT MODE to CH 2

A SOURCE to CH 2

g. ADJUST—CH 2 Trigger DC Level, R255, to obtain stable display in + and – slopes.

33. Check B Trigger DC Levels

34. Check Triggering

a. High-frequency triggering

Internal	25 MHz	100 MHz
AC	0.3 div	1.5 div
LF REJ	0.3 div	1.5 div
DC	0.3 div	1.5 div

External

AC	50 mV	150 mV
LF REJ	100 mV	300 mV
DC	50 mV	150 mV

Multiply by 10 for EXT ÷ 10 sensitivity.

b. HF REJ—Triggers on 0.3 division at 50 kHz; will not trigger at 350 kHz.

c. LF REJ—Triggers on 0.3 division at 50 kHz; will not trigger on 60 Hz.

d. Check single sweep operation and READY light.

e. Check A NORM triggering.

f. Check LINE triggering.

g. Check AUTO recovery time.

35. Check External LEVEL Range

a. EXT: at least + and – 2 V for both A and B.

b. EXT ÷ 10: at least + and – 20 V for A only.

36. Adjust TRIG VIEW Centering

a. ADJUST—Trigger View Centering R675, so trace is at center horizontal line, within 1 division.

b. Connect 200 mV square-wave from Standard Amplitude Calibrator to A External Trigger Input.

c. Check for 3.2 to 4.8 divisions of display with TRIG VIEW in.

HORIZONTAL SYSTEM CALIBRATION

37. Adjust Sweep Start and A Sweep Calibration

a. B SOURCE to STARTS AFTER DELAY
HORIZ DISPLAY to A INTEN
A TIME/DIV to 1 ms
B TIME/DIV to 5 μs
DELAY TIME POSITION to 1.00

b. Use 1 ms time markers.

c. ADJUST—R1115, to intensify start of the 2nd time marker.

d. DELAY TIME POSITION to 9.00.

e. ADJUST—R1145 to intensify start of 10th time marker.

f. HORIZ DISPLAY to B DLY'D

g. ADJUST—R1145, so 10th time marker starts at the sweep start.

h. DELAY TIME POSITION to 1.00.

i. ADJUST—R1115, so 2nd time marker starts at the sweep start.

j. INTERACTION—There is interaction between R1115 and R1145. Readjust both to minimize interaction.

k. HORIZ DISPLAY to A.

l. ADJUST—R1237 for one time marker/division.

38. Adjust B Sweep Calibration

a. B TIME/DIV to 1 ms
HORIZ DISPLAY to B DLY'D

b. ADJUST—R1175, for one time marker/division.

39. Check Differential Time Accuracy

a. Accuracy within 0.01 division between adjacent time markers from +15°C to +35°C.

b. Accuracy within 0.03 division from −15°C to +55°C.

40. Adjust Horizontal Gain

a. HORIZ DISPLAY to A
both TIME/DIV to 1 ms

b. Use 1 ms time marks.

c. ADJUST—X1 Gain, R1237, for exactly 1 time marker/division.

d. Use 0.1 ms time marks.

e. X10 MAG—in.

f. ADJUST—X10 Gain, R1238, for exactly 1 time marker/division.

41. Check Sweep Linearity

42. Adjust Magnifier Registration

a. Use 5 ms time marks.

b. Position the middle magnified time marker to the center vertical graticule line.

c. Turn the X10 MAG off.

d. CHECK—Center time marker should align with the center vertical graticule line, within 0.2 division.

e. ADJUST—Magnifier Registration R1225 to align the center time marker with the center vertical graticule line.

43. Check A Sweep Length

11 divisions, ± 0.5 division.

44. Check VAR TIME/DIV Range

a. A TIME/DIV to 2 ms
HORIZ DISPLAY to A

b. Use 5 ms time marks.

c. Check for 1 time marker/division by rotating the VAR TIME/DIV control.

d. Check UNCAL light.

45. Check Horizontal POSITION Control Range

46. Adjust High Speed Timing

a. B SOURCE to STARTS AFTER DELAY

A TIME/DIV to 0.5 μs

B TIME/DIV to 0.05 μs

HORIZ DISPLAY to A INTEN

b. Use 0.5 μs time marks.

c. ADJUST—C1137, for 1 time marker/division.

d. HORIZ DISPLAY to B DLY'D

DELAY TIME POSITION to 1.50

e. With horizontal POSITION have time marker cross the center vertical graticule line.

f. DELAY TIME POSITION to 8.50.

g. ADJUST—C1137, so time marker crosses the center vertical graticule line.

h. Repeat procedure for optimum timing.

i. HORIZ DISPLAY to B DLY'D

B SOURCE to NORM

A TIME/DIV to 1 μs

B TIME/DIV to 0.5 μs

DELAY TIME POSITION fully counterclockwise

j. ADJUST—C1167, for 1 time marker/division.

47. Check A and B Timing Accuracy

Within 0.2 division over first 10 divisions of display.

48. Adjust High Speed Magnified Timing

a. X10 MAG—on

A TIME/DIV to 0.05 μs

b. Use 10 nanosecond sinewave.

c. ADJUST—Magnified Timing, C1261, C1281, for exactly one cycle/2 divisions. Disregard first and last 10 divisions of sweep length.

49. Check A and B Magnified Timing Accuracy

a. Accuracy within 0.3 division.

b. Exclude the following portions of the sweep:

at 5 ns: Exclude first and last 10 divisions

at 10 ns: Exclude first and last 5 divisions

at 20 ns: Exclude first and last 2.5 divisions

50. Check Delay Time Accuracy

Within 8 minor dial divisions.

51. Check Delay Time Jitter

a. A TIME/DIV to 1 ms

B TIME/DIV to 1 μs

HORIZ DISPLAY to B DLY'D

b. Use 1 ms time marks.

c. CHECK—Jitter on the leading edge of the time marker does not exceed 0.2 division (0.5 division if operating the instrument on 50 Hz line voltage). Ignore the slow drift.

52. Check MIX Sweep Accuracy

a. Use 1 ms time marks.

b. Check for proper timing within 0.16 division ± the A sweep error.

53. Adjust X Gain

a. A TIME/DIV to X-Y

both VOLTS/DIV to 5 mV

b. Apply 20 mV square wave from Standard Amplitude Calibrator to CH 1 or X input.

c. ADJUST—X Gain, R1215, for 4 divisions of deflection between the dots, within 4%.

54. Check X-Y Phasing and Bandwidth

a. VERT MODE to CH 2

b. Connect an 8 division display of 50 kHz signal from the Medium-Frequency Constant-Amplitude Signal Generator (Type 191) to the CH 1 and 2 inputs.

c. Check X-Y phase shift is no more than 0.4 division.

d. Check bandwidth is at least 4 MHz.

55. Check B Ends A Operation

56. Check A Trigger Holdoff

Increases holdoff by at least a factor of 10.

57. Check A and B Gates

a. A Gate: 5.5 V, within 0.5 V.

b. B Gate: 5.5 V, within 0.5 V.

58. Check EXT Z-AXIS Operation

a. Connect 5 V square wave to External Trigger Input and EXT Z-AXIS input.

b. Check for noticeable intensity modulation.

PART III - CALIBRATION

Introduction

The following procedure returns the 465 to correct calibration. All limits and tolerances given in this procedure are calibration guides and should not be interpreted as instrument specifications except as specified in the Specifications section of this manual. Where possible, instrument performance is checked before an adjustment is made. For best overall instrument performance when performing a complete calibration procedure, make each adjustment to the exact setting even if the CHECK— is within the allowable tolerance.

Index to Part III - Calibration

POWER SUPPLY CALIBRATION

1. Check Power Supply DC Levels and Ripple — Page 5-27
2. Adjust High Voltage Supply — Page 5-27

DISPLAY and Z-AXIS CALIBRATION

3. Adjust CRT Grid Bias — Page 5-28
4. Check Display Controls — Page 5-28
5. Adjust Trace Alignment — Page 5-29
6. Adjust Y Axis Alignment — Page 5-29
7. Adjust Geometry — Page 5-29
8. Adjust Z-Axis Compensation — Page 5-29

VERTICAL SYSTEM CALIBRATION

9. Adjust Vertical Output Amplifier Bias — Page 5-30
10. Adjust Vertical Output Centering and Check BEAM FIND — Page 5-30
11. Adjust Channel 1 Step Attenuator Balance — Page 5-31
12. Adjust Channel 1 Variable Volts/Division Balance — Page 5-31
13. Check Probe Indicator Lights — Page 5-32
14. Check Channel 1 and 2 INPUT COUPLING Switches — Page 5-32
15. Adjust Channel 1 Position Centering — Page 5-32
16. Adjust Channel 2 Step Attenuator Balance — Page 5-32
17. Adjust Channel 2 Variable Volts/Division Balance — Page 5-33
18. Adjust Channel 2 Position Range — Page 5-33
19. Check Channel 2 INVERT Balance — Page 5-33
20. Adjust Channel 1 Gain — Page 5-33
21. Adjust Channel 2 Gain — Page 5-34
22. Check Channel 1 and 2 Variable Volts/Division Range — Page 5-35
23. Check Vertical ADD Mode Operation — Page 5-35
24. Check Compression and Expansion — Page 5-35
25. Check Vertical ALT Mode Operation — Page 5-35
26. Check Vertical CHOP Mode Operation — Page 5-36
27. Adjust Vertical Output Low-Frequency Compensation — Page 5-36
28. Adjust Channel 1 VOLTS/DIV Compensation — Page 5-36
29. Adjust Channel 2 VOLTS/DIV Compensation — Page 5-37

30. Adjust Channel 2 and Vertical Output High-Frequency Compensation — Page 5-38

31. Check Channel 2 Position Effect — Page 5-39

32. Adjust Channel 1 High-Frequency Compensation — Page 5-39

33. Check Channel 1 Position Effect — Page 5-41

34. Check Vertical Amplifier Bandwidth — Page 5-41

35. Check Cascaded Gain and Bandwidth — Page 5-41

36. Check Vertical Channel Isolation — Page 5-42

37. Check Common Mode Rejection Ratio — Page 5-42

38. Check Bandwidth Limit Operation — Page 5-42

TRIGGER SYSTEM CALIBRATION

39. Adjust A Trigger Sensitivity — Page 5-43

40. Adjust B Trigger Sensitivity — Page 5-44

41. Adjust B Trigger Slope and Level Centering — Page 5-44

42. Adjust A Trigger Slope and Level Centering — Page 5-44

43. Adjust A Trigger DC Levels — Page 5-44

44. Check B Trigger DC Levels — Page 5-45

45. Check B Internal 25 Megahertz Triggering — Page 5-45

46. Check A Internal 25 Megahertz Triggering — Page 5-46

47. Check A External 25 Megahertz Triggering — Page 5-46

48. Check B External 25 Megahertz Triggering — Page 5-46

49. Check A and B External 100 Megahertz Triggering — Page 5-47

50. Check B Internal 100 Megahertz Triggering — Page 5-47

51. Check A Internal 100 Megahertz Triggering — Page 5-48

52. Check A and B HF REJ Triggering — Page 5-48

53. Check B 60 Hertz and LF REJ Triggering — Page 5-49

54. Check A 60 Hertz and LF REJ Triggering — Page 5-49

55. Check A LEVEL Control External Range — Page 5-50

56. Check B LEVEL Control External Range — Page 5-50

57. Check Single Sweep Operation — Page 5-51

58. Check A Normal Mode Operation — Page 5-51

59. Check LINE Triggering — Page 5-51

60. Check Automatic Recovery Time — Page 5-51

61. Adjust Trigger View Centering — Page 5-52

62. Check Trigger View Deflection Factor — Page 5-52

HORIZONTAL SYSTEM CALIBRATION

63. Adjust Sweep Start and A Sweep Calibration — Page 5-53

64. Check Differential Time Accuracy — Page 5-53

65. Adjust Horizontal Amplifier Gain Page 5-54

66. Check Sweep Linearity Page 5-54

67. Adjust Magnifier Registration Page 5-54

68. Adjust B Sweep Calibration Page 5-55

69. Check Sweep Length Page 5-55

70. Check VAR TIME/DIV Range Page 5-55

71. Check Horizontal POSITION Control Range Page 5-55

72. Adjust A TIME/DIV High Speed Timing Page 5-55

73. Adjust B TIME/DIV High Speed Timing Page 5-56

74. Check A and B TIME/DIV Accuracy Page 5-56

75. Adjust High Speed Magnified Timing Page 5-56

76. Check A and B Magnified Timing Accuracy Page 5-57

77. Check Delay Time Accuracy Page 5-57

78. Check Delay Time Jitter Page 5-58

79. Check Mixed Sweep Accuracy Page 5-58

80. Adjust X Gain Page 5-58

81. Check X-Y Phasing and Bandwidth Page 5-58

82. Check B ENDS A Operation Page 5-59

83. Check A TRIG HOLDOFF Page 5-59

CALIBRATOR, GATES, & EXT Z-AXIS CALIBRATION

84. Adjust CALIBRATOR Output Page 5-60

85. Check A and B + GATE Page 5-60

86. Check EXT Z-AXIS Operation Page 5-60

Preliminary Procedure for Calibration

NOTE

This instrument should be adjusted at an ambient temperature of +25°C (± 5°C) for best overall accuracy.

1. Remove the dust cover from the 465 as outlined in the Disassembly Instructions in the Maintenance section of the manual.

2. Connect the autotransformer to a suitable power source.

3. Connect the 465 to the autotransformer output.

4. Set the autotransformer output voltage to the center of the voltage range selected by the Line Voltage Selector.

5. Set the controls as given under Preliminary Control Settings (given prior to Part I - Performance Check). Allow at least 20 minutes warmup before proceeding.

NOTE

Titles for external controls of this instrument are capitalized in this procedure (e.g., INTENSITY). Internal adjustments are initial capitalized only (e.g., CRT Grid Bias).

Ⓐ

17. Adjust CH 2 Gain

a. CH 2 VOLTS/DIV to 5 mV

b. Connect 20 mV signal from Standard Amplitude Calibrator to CH 2 input.

c. ADJUST—CH 2 Gain, R218, for exactly 4 divisions of deflection.

d. Check all attenuator ranges for proper deflection, within 3%.

e. Check Variable Range: CH 2 VAR control must reduce a 5 division signal to less than 2 divisions.

18. Check ADD Operation

a. Both VOLTS/DIV to 5 mV
Both INPUT COUPLING switches to DC

b. Connect 10 mV from Standard Amplitude Calibrator to both CH inputs.

c. Set VERT MODE to ADD.

d. CHECK—If CH 1 and CH 2 Gains were adjusted, check for 4 divisions of deflection, within 1% (within 3% if CH 1 and CH 2 Gains were not adjusted).

19. Check Compression and Expansion

a. With 2 division signal, position to top and bottom of graticule.

b. Check for no more than 0.1 division of compression or expansion.

20. Check Vertical ALTernate Operation On All Sweep Speeds

21. Check Vertical CHOP Operation

a. TIME/DIV to 1 μs
VERT MODE to CHOP

b. Check for blanking of transients at normal INTENSITY level.

c. Check duration of each cycle is about 4 divisions.

22. Adjust Vertical Output Low-Frequency Compensation

a. Connect the fast-rise output of the Square-Wave Generator (Type 106) to CH 1 input.

b. ADJUST—R424, R433, R434 for best flat-top waveform using 1 kHz, 10 kHz, and 100 kHz signals.

23. Adjust VOLTS/DIV Compensation

a. Adjust CH 1 VOLTS/DIV Compensation for no more than 2% aberrations. Use 20 picofarad Normalizer and a 5 division signal.

5 mV	C1
10 mV	Check
20 mV	Check
50 mV	C12, C13
.1 V	Check
.2 V	Check
.5 V	C10, C11
1 V	Check
2 V	Check
5 V	Check

b. Repeat procedure for CH 2.

24. Adjust Vertical Output High-Frequency Compensation

a. VOLTS/DIV to 5 mV
A TIME/DIV to 0.05 μs

b. Adjust for a 5 division display from the Fast-Rise High-Amplitude Pulse Generator (Type 109) to CH 2 input.

c. ADJUST—C77, C83, C205, R205, C249, R249, C403, C442, R442, C443, for no more than 3% aberrations and a 3.5 nanosecond, or less, risetime.

d. Check negative step aberrations, within 5%.

e. CH 2 VOLTS/DIV to 10 mV

f. ADJUST—R97, C97, for aberrations within 3% and 3.5 nanosecond, or less, risetime.

g. Check negative step aberrations, within 5%.

h. CH 2 VOLTS/DIV to 20 mV

POWER SUPPLY CALIBRATION

Equipment Required

1. Precision DC Voltmeter
2. DC Voltmeter
3. Test Oscilloscope
4. Autotransformer
5. Three-inch Screwdriver

Control Settings

Preset instrument controls to the settings given under Preliminary Control Settings.

1. Check Power Supply DC Levels and Ripple

a. Connect the Precision DC Voltmeter between test point (TP) 1536 and GND (negative meter lead to ground) on the Interface board. See Fig. 5-2.

b. CHECK—Meter reading of +55 volts within 0.5% (± 27.5 mV).

c. ADJUST—(Adjust ONLY if outside of 0.5% tolerance) +55 Volt Supply adjustment R1538 (see Fig. 5-2) for a meter reading of +55 volts within 0.1% (0.05 mV).

d. Using the precision DC Voltmeter, measure the DC level of the power supplies given in Table 5-5. Observe proper meter polarity. See Fig. 5-2 for test point locations.

e. Using the Test Oscilloscope, check for correct ripple as given in Table 5-5, while varying the autotransformer between 103.5 VAC to 126.5 VAC.

f. CHECK—For low line indicator to come on when the autotransformer is at approximately 103 volts.

g. Return the line voltage to 115 volts.

TABLE 5-5

Power Supply Tolerance and Ripple

Power Supply	Test Point	Tolerance	Typical Ripple (peak-to-peak)
+55 volt	TP1536	± 0.5%	4 mV
+15 volt	TP1548	± 1.5%	2 mV
+5 volt	TP1558	± 1.5%	2 mV
−8 volt	TP1568	± 1.5%	2 mV
+120 volt	CR1516 Anode		≈1.0 V
+110 volt	TP1518	±2.0%	40 mV

2. Adjust High Voltage Supply

a. Connect the DC Voltmeter between −2450 volt test point and ground (positive meter lead to ground). −2450 test point is accessible through the hole in the high voltage cover. (See Fig. 5-3.)

b. CHECK—Meter for a reading of −2450 volts ± 49 volts.

c. ADJUST—High Voltage adjustment R1400 (see Fig. 5-3) for a meter reading of −2450 volts (± 24.5 volts).

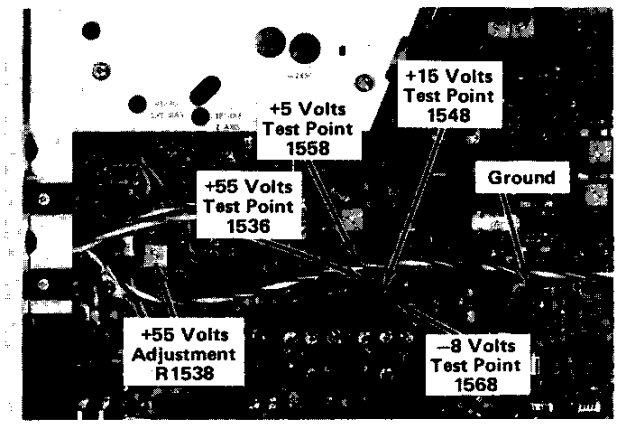

Fig. 5-2. Low-voltage power supply test points and adjustment locations. See Fig. 7-21A and 7-21B for alternate test point locations.

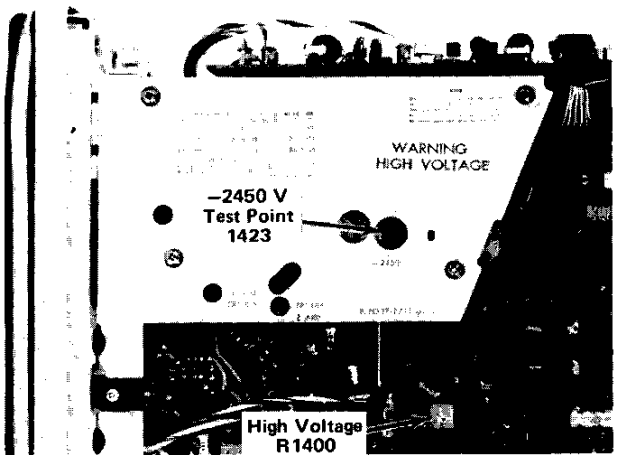

Fig. 5-3. High-voltage test point and adjustment locations.

i. ADJUST—R98, C98, for aberrations within 3% and 3.5 nanosecond, or less, risetime.

j. Check negative step aberrations, within 5%.

k. Check remaining settings of CH 2 VOLTS/DIV switch for: Positive step aberrations within 3%; risetime of 3.5 nanoseconds, or less; negative step aberrations within 5%.

l. Check position effect: Positive step aberrations within 5%, negative step aberrations within 7%.

25. Adjust CH 1 High-Frequency Compensation

a. Repeat step 24-c with adjustments C27, C33, C105, R105, C122, R122, C149, and R149.

b. Adjust R47, C47 for step 24-f.

c. Adjust R48, C48 for step 24-i.

26. Check Vertical Amplifier Bandwidth

a. Use the High-Frequency Constant-Amplitude Signal Generator (067-0532-01): 5 division display of 3 MHz reference signal.

b. From 5 mV to 5 V settings of both VOLTS/DIV switches, check frequency is at least 100 MHz (0°C to +40°C) when display is reduced to 3.5 division.

27. Check Cascaded Bandwidth and Sensitivity

a. Connect CH 1 OUT to CH 2 input through a terminated cable.

b. Check that the sensitivity is at least 1 mV/division.

c. Check Bandwidth is at least 50 MHz.

28. Check Vertical Channel Isolation and CMRR

a. Channel isolation: at least 100:1 at 25 MHz.

b. CMRR: at least 10:1 at 20 MHz for signals of 6 divisions or less.

29. Check Bandwidth Limit Operation

a. Connect 6 division display of a 50 kHz signal to CH 1 input.

b. Check frequency is 20 MHz, within 4 MHz, when display is reduced to 4.2 divisions.

TRIGGER SYSTEM CALIBRATION

30. Adjust A and B Trigger Sensitivity

a. VOLTS/DIV to 10 mV

both TIME/DIV to 0.05 μs

A SOURCE to EXT

A COUPLING to AC

A SLOPE to +

b. Connect the output of the Medium-Frequency Constant-Amplitude Signal Generator (Type 191) to the A and B External Trigger Inputs via a 50 Ω 5 ns GR cable, 50 Ω Signal Pickoff thru output, GR-to-BNC adapter, X10 attenuator, 50 Ω termination, and a dual input coupler.

c. Connect the 10% BNC output connector of the Signal Pickoff Unit to the CH 1 and CH 2 inputs via a terminated dual input coupler.

d. ADJUST—A and B Sensitivity, R655, R555, to just obtain a stable display with a five division display of 25 MHz signal.

31. Adjust LEVEL and SLOPE Centering

a. Position 0.3 division display of 50 kHz signal to center vertical graticule line.

b. ADJUST—A Level Center, R635, for triggered display.

c. ADJUST—A Slope Center, R645, so trigger point is the same when switching from + to − slope.

d. ADJUST—B Level Center, R535, for triggered display.

e. ADJUST—B Slope Center, R545, so trigger point is the same when switching from + to – slope.

32. Adjust A Trigger DC Levels

a. A COUPLING to DC

A SOURCE to NORM

A LEVEL to 0

b. 0.3 division display centered vertically on the CRT graticule.

c. ADJUST—Normal Trigger DC Level, R340, to obtain stable display in + and – slopes.

d. A SOURCE to CH 1

e. ADJUST—CH 1 Trigger DC Level, R155, to obtain stable display in + and – slopes.

f. VERT MODE to CH 2

A SOURCE to CH 2

g. ADJUST—CH 2 Trigger DC Level, R255, to obtain stable display in + and – slopes.

33. Check B Trigger DC Levels

34. Check Triggering

a. High-frequency triggering

Internal	25 MHz	100 MHz
AC	0.3 div	1.5 div
LF REJ	0.3 div	1.5 div
DC	0.3 div	1.5 div

External

AC	50 mV	150 mV
LF REJ	100 mV	300 mV
DC	50 mV	150 mV

Multiply by 10 for EXT ÷ 10 sensitivity.

b. HF REJ—Triggers on 0.3 division at 50 kHz; will not trigger at 350 kHz.

c. LF REJ—Triggers on 0.3 division at 50 kHz; will not trigger on 60 Hz.

d. Check single sweep operation and READY light.

e. Check A NORM triggering.

f. Check LINE triggering.

g. Check AUTO recovery time.

35. Check External LEVEL Range

a. EXT: at least + and – 2 V for both A and B.

b. EXT ÷ 10: at least + and – 20 V for A only.

36. Adjust TRIG VIEW Centering

a. ADJUST—Trigger View Centering R675, so trace is at center horizontal line, within 1 division.

b. Connect 200 mV square-wave from Standard Amplitude Calibrator to A External Trigger Input.

c. Check for 3.2 to 4.8 divisions of display with TRIG VIEW in.

HORIZONTAL SYSTEM CALIBRATION

37. Adjust Sweep Start and A Sweep Calibration

a. B SOURCE to STARTS AFTER DELAY
HORIZ DISPLAY to A INTEN
A TIME/DIV to 1 ms
B TIME/DIV to 5 μs
DELAY TIME POSITION to 1.00

b. Use 1 ms time markers.

c. ADJUST—R1115, to intensify start of the 2nd time marker.

d. DELAY TIME POSITION to 9.00.

e. ADJUST—R1145 to intensify start of 10th time marker.

f. HORIZ DISPLAY to B DLY'D

g. ADJUST—R1145, so 10th time marker starts at the sweep start.

h. DELAY TIME POSITION to 1.00.

i. ADJUST—R1115, so 2nd time marker starts at the sweep start.

j. INTERACTION—There is interaction between R1115 and R1145. Readjust both to minimize interaction.

k. HORIZ DISPLAY to A.

l. ADJUST—R1237 for one time marker/division.

38. Adjust B Sweep Calibration

a. B TIME/DIV to 1 ms
HORIZ DISPLAY to B DLY'D

b. ADJUST—R1175, for one time marker/division.

39. Check Differential Time Accuracy

a. Accuracy within 0.01 division between adjacent time markers from +15°C to +35°C.

b. Accuracy within 0.03 division from −15°C to +55°C.

40. Adjust Horizontal Gain

a. HORIZ DISPLAY to A
both TIME/DIV to 1 ms

b. Use 1 ms time marks.

c. ADJUST—X1 Gain, R1237, for exactly 1 time marker/division.

d. Use 0.1 ms time marks.

e. X10 MAG—in.

f. ADJUST—X10 Gain, R1238, for exactly 1 time marker/division.

41. Check Sweep Linearity

42. Adjust Magnifier Registration

a. Use 5 ms time marks.

b. Position the middle magnified time marker to the center vertical graticule line.

c. Turn the X10 MAG off.

d. CHECK—Center time marker should align with the center vertical graticule line, within 0.2 division.

e. ADJUST—Magnifier Registration R1225 to align the center time marker with the center vertical graticule line.

43. Check A Sweep Length

11 divisions, ± 0.5 division.

44. Check VAR TIME/DIV Range

a. A TIME/DIV to 2 ms
HORIZ DISPLAY to A

b. Use 5 ms time marks.

c. Check for 1 time marker/division by rotating the VAR TIME/DIV control.

d. Check UNCAL light.

45. Check Horizontal POSITION Control Range

46. Adjust High Speed Timing

a. B SOURCE to STARTS AFTER DELAY

A TIME/DIV to 0.5 μs

B TIME/DIV to 0.05 μs

HORIZ DISPLAY to A INTEN

b. Use 0.5 μs time marks.

c. ADJUST—C1137, for 1 time marker/division.

d. HORIZ DISPLAY to B DLY'D

DELAY TIME POSITION to 1.50

e. With horizontal POSITION have time marker cross the center vertical graticule line.

f. DELAY TIME POSITION to 8.50.

g. ADJUST—C1137, so time marker crosses the center vertical graticule line.

h. Repeat procedure for optimum timing.

i. HORIZ DISPLAY to B DLY'D

B SOURCE to NORM

A TIME/DIV to 1 μs

B TIME/DIV to 0.5 μs

DELAY TIME POSITION fully counterclockwise

j. ADJUST—C1167, for 1 time marker/division.

47. Check A and B Timing Accuracy

Within 0.2 division over first 10 divisions of display.

48. Adjust High Speed Magnified Timing

a. X10 MAG—on

A TIME/DIV to 0.05 μs

b. Use 10 nanosecond sinewave.

c. ADJUST—Magnified Timing, C1261, C1281, for exactly one cycle/2 divisions. Disregard first and last 10 divisions of sweep length.

49. Check A and B Magnified Timing Accuracy

a. Accuracy within 0.3 division.

b. Exclude the following portions of the sweep:

at 5 ns: Exclude first and last 10 divisions

at 10 ns: Exclude first and last 5 divisions

at 20 ns: Exclude first and last 2.5 divisions

50. Check Delay Time Accuracy

Within 8 minor dial divisions.

51. Check Delay Time Jitter

a. A TIME/DIV to 1 ms

B TIME/DIV to 1 μs

HORIZ DISPLAY to B DLY'D

b. Use 1 ms time marks.

c. CHECK—Jitter on the leading edge of the time marker does not exceed 0.2 division (0.5 division if operating the instrument on 50 Hz line voltage). Ignore the slow drift.

52. Check MIX Sweep Accuracy

a. Use 1 ms time marks.

b. Check for proper timing within 0.16 division ± the A sweep error.

53. Adjust X Gain

a. A TIME/DIV to X-Y

both VOLTS/DIV to 5 mV

b. Apply 20 mV square wave from Standard Amplitude Calibrator to CH 1 or X input.

c. ADJUST—X Gain, R1215, for 4 divisions of deflection between the dots, within 4%.

54. Check X-Y Phasing and Bandwidth

a. VERT MODE to CH 2

b. Connect an 8 division display of 50 kHz signal from the Medium-Frequency Constant-Amplitude Signal Generator (Type 191) to the CH 1 and 2 inputs.

c. Check X-Y phase shift is no more than 0.4 division.

d. Check bandwidth is at least 4 MHz.

55. Check B Ends A Operation

56. Check A Trigger Holdoff

Increases holdoff by at least a factor of 10.

57. Check A and B Gates

a. A Gate: 5.5 V, within 0.5 V.

b. B Gate: 5.5 V, within 0.5 V.

58. Check EXT Z-AXIS Operation

a. Connect 5 V square wave to External Trigger Input and EXT Z-AXIS input.

b. Check for noticeable intensity modulation.

PART III - CALIBRATION

Introduction

The following procedure returns the 465 to correct calibration. All limits and tolerances given in this procedure are calibration guides and should not be interpreted as instrument specifications except as specified in the Specifications section of this manual. Where possible, instrument performance is checked before an adjustment is made. For best overall instrument performance when performing a complete calibration procedure, make each adjustment to the exact setting even if the CHECK— is within the allowable tolerance.

Index to Part III - Calibration

POWER SUPPLY CALIBRATION

1. Check Power Supply DC Levels and Ripple — Page 5-27
2. Adjust High Voltage Supply — Page 5-27

DISPLAY and Z-AXIS CALIBRATION

3. Adjust CRT Grid Bias — Page 5-28
4. Check Display Controls — Page 5-28
5. Adjust Trace Alignment — Page 5-29
6. Adjust Y Axis Alignment — Page 5-29
7. Adjust Geometry — Page 5-29
8. Adjust Z-Axis Compensation — Page 5-29

VERTICAL SYSTEM CALIBRATION

9. Adjust Vertical Output Amplifier Bias — Page 5-30
10. Adjust Vertical Output Centering and Check BEAM FIND — Page 5-30
11. Adjust Channel 1 Step Attenuator Balance — Page 5-31
12. Adjust Channel 1 Variable Volts/Division Balance — Page 5-31
13. Check Probe Indicator Lights — Page 5-32
14. Check Channel 1 and 2 INPUT COUPLING Switches — Page 5-32
15. Adjust Channel 1 Position Centering — Page 5-32
16. Adjust Channel 2 Step Attenuator Balance — Page 5-32
17. Adjust Channel 2 Variable Volts/Division Balance — Page 5-33
18. Adjust Channel 2 Position Range — Page 5-33
19. Check Channel 2 INVERT Balance — Page 5-33
20. Adjust Channel 1 Gain — Page 5-33
21. Adjust Channel 2 Gain — Page 5-34
22. Check Channel 1 and 2 Variable Volts/Division Range — Page 5-35
23. Check Vertical ADD Mode Operation — Page 5-35
24. Check Compression and Expansion — Page 5-35
25. Check Vertical ALT Mode Operation — Page 5-35
26. Check Vertical CHOP Mode Operation — Page 5-36
27. Adjust Vertical Output Low-Frequency Compensation — Page 5-36
28. Adjust Channel 1 VOLTS/DIV Compensation — Page 5-36
29. Adjust Channel 2 VOLTS/DIV Compensation — Page 5-37

30. Adjust Channel 2 and Vertical Output High-Frequency Compensation — Page 5-38

31. Check Channel 2 Position Effect — Page 5-39

32. Adjust Channel 1 High-Frequency Compensation — Page 5-39

33. Check Channel 1 Position Effect — Page 5-41

34. Check Vertical Amplifier Bandwidth — Page 5-41

35. Check Cascaded Gain and Bandwidth — Page 5-41

36. Check Vertical Channel Isolation — Page 5-42

37. Check Common Mode Rejection Ratio — Page 5-42

38. Check Bandwidth Limit Operation — Page 5-42

TRIGGER SYSTEM CALIBRATION

39. Adjust A Trigger Sensitivity — Page 5-43

40. Adjust B Trigger Sensitivity — Page 5-44

41. Adjust B Trigger Slope and Level Centering — Page 5-44

42. Adjust A Trigger Slope and Level Centering — Page 5-44

43. Adjust A Trigger DC Levels — Page 5-44

44. Check B Trigger DC Levels — Page 5-45

45. Check B Internal 25 Megahertz Triggering — Page 5-45

46. Check A Internal 25 Megahertz Triggering — Page 5-46

47. Check A External 25 Megahertz Triggering — Page 5-46

48. Check B External 25 Megahertz Triggering — Page 5-46

49. Check A and B External 100 Megahertz Triggering — Page 5-47

50. Check B Internal 100 Megahertz Triggering — Page 5-47

51. Check A Internal 100 Megahertz Triggering — Page 5-48

52. Check A and B HF REJ Triggering — Page 5-48

53. Check B 60 Hertz and LF REJ Triggering — Page 5-49

54. Check A 60 Hertz and LF REJ Triggering — Page 5-49

55. Check A LEVEL Control External Range — Page 5-50

56. Check B LEVEL Control External Range — Page 5-50

57. Check Single Sweep Operation — Page 5-51

58. Check A Normal Mode Operation — Page 5-51

59. Check LINE Triggering — Page 5-51

60. Check Automatic Recovery Time — Page 5-51

61. Adjust Trigger View Centering — Page 5-52

62. Check Trigger View Deflection Factor — Page 5-52

HORIZONTAL SYSTEM CALIBRATION

63. Adjust Sweep Start and A Sweep Calibration — Page 5-53

64. Check Differential Time Accuracy — Page 5-53

65. Adjust Horizontal Amplifier Gain Page 5-54

66. Check Sweep Linearity Page 5-54

67. Adjust Magnifier Registration Page 5-54

68. Adjust B Sweep Calibration Page 5-55

69. Check Sweep Length Page 5-55

70. Check VAR TIME/DIV Range Page 5-55

71. Check Horizontal POSITION Control Range Page 5-55

72. Adjust A TIME/DIV High Speed Timing Page 5-55

73. Adjust B TIME/DIV High Speed Timing Page 5-56

74. Check A and B TIME/DIV Accuracy Page 5-56

75. Adjust High Speed Magnified Timing Page 5-56

76. Check A and B Magnified Timing Accuracy Page 5-57

77. Check Delay Time Accuracy Page 5-57

78. Check Delay Time Jitter Page 5-58

79. Check Mixed Sweep Accuracy Page 5-58

80. Adjust X Gain Page 5-58

81. Check X-Y Phasing and Bandwidth Page 5-58

82. Check B ENDS A Operation Page 5-59

83. Check A TRIG HOLDOFF Page 5-59

CALIBRATOR, GATES, & EXT Z-AXIS CALIBRATION

84. Adjust CALIBRATOR Output Page 5-60

85. Check A and B + GATE Page 5-60

86. Check EXT Z-AXIS Operation Page 5-60

Preliminary Procedure for Calibration

NOTE

This instrument should be adjusted at an ambient temperature of +25°C (± 5°C) for best overall accuracy.

1. Remove the dust cover from the 465 as outlined in the Disassembly Instructions in the Maintenance section of the manual.

2. Connect the autotransformer to a suitable power source.

3. Connect the 465 to the autotransformer output.

4. Set the autotransformer output voltage to the center of the voltage range selected by the Line Voltage Selector.

5. Set the controls as given under Preliminary Control Settings (given prior to Part I - Performance Check). Allow at least 20 minutes warmup before proceeding.

NOTE

Titles for external controls of this instrument are capitalized in this procedure (e.g., INTENSITY). Internal adjustments are initial capitalized only (e.g., CRT Grid Bias).

Ⓐ

DISPLAY & Z-AXIS CALIBRATION

Equipment Required

1. DC Voltmeter
2. Test Oscilloscope
3. Time Mark Generator
4. 50 Ω BNC Cable
5. 50Ω BNC Termination
6. X10 Probe
7. Three-inch Screwdriver
8. Low Capacitance Screwdriver

Control Settings

Preset instrument controls to the settings given under Preliminary Control Settings except as follows:

A TIME/DIV	X-Y
INTENSITY	Fully Counterclockwise
CH 1 INPUT COUPLING	GND

3. Adjust CRT Grid Bias

a. Connect the DC Voltmeter between TP1486 which is accessible through a hole in the high voltage cover, and ground. (Negative meter lead to ground.) See Fig. 5-4.

b. Set the INTENSITY control for the dimmest, well-defined dot on the CRT.

c. CHECK—Meter for a reading of +20 volts ± 4 volts.

d. ADJUST—INTENSITY control for a meter reading of +20 volts.

e. ADJUST—CRT Grid Bias adjustment, R1480, for the dimmest, well-defined dot visible on the CRT (see Fig. 5-4).

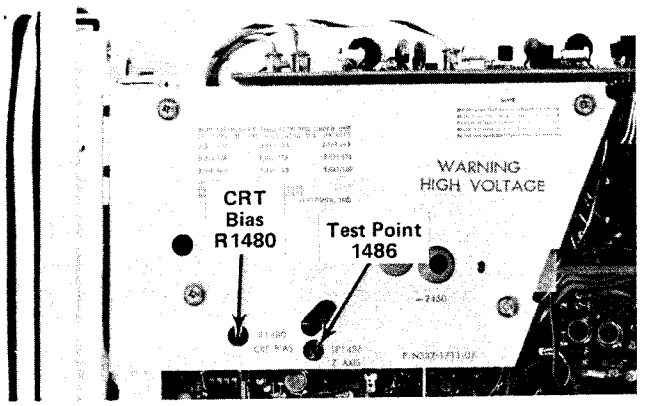

Fig. 5-4. Location of CRT Grid Bias adjustment and test point 1486.

f. Remove the DC Voltmeter connections.

g. Rotate ASTIG control (front panel screwdriver adjustment) through its range.

h. CHECK—For dot de-focus at both extremes of ASTIG control.

i. Reset the ASTIG control for a well-defined dot.

4. Check Display Controls

a. Rotate SCALE ILLUM control through its range.

b. CHECK—For a smooth increase in illumination.

c. Set TIME/DIV to 1 ms and INTENSITY control to midrange.

d. Rotate FOCUS control through its range.

e. CHECK—For trace de-focus at both extremes of FOCUS control.

f. Rotate INTENSITY control from fully counterclockwise to fully clockwise.

g. CHECK—For trace intensity to increase smoothly from minimum to maximum intensity.

h. Reset INTENSITY and FOCUS controls for a well-defined trace.

POWER SUPPLY CALIBRATION

Equipment Required

1. Precision DC Voltmeter
2. DC Voltmeter
3. Test Oscilloscope
4. Autotransformer
5. Three-inch Screwdriver

Control Settings

Preset instrument controls to the settings given under Preliminary Control Settings.

1. Check Power Supply DC Levels and Ripple

a. Connect the Precision DC Voltmeter between test point (TP) 1536 and GND (negative meter lead to ground) on the Interface board. See Fig. 5-2.

b. CHECK—Meter reading of +55 volts within 0.5% (± 27.5 mV).

c. ADJUST—(Adjust ONLY if outside of 0.5% tolerance) +55 Volt Supply adjustment R1538 (see Fig. 5-2) for a meter reading of +55 volts within 0.1% (0.05 mV).

d. Using the precision DC Voltmeter, measure the DC level of the power supplies given in Table 5-5. Observe proper meter polarity. See Fig. 5-2 for test point locations.

e. Using the Test Oscilloscope, check for correct ripple as given in Table 5-5, while varying the autotransformer between 103.5 VAC to 126.5 VAC.

f. CHECK—For low line indicator to come on when the autotransformer is at approximately 103 volts.

g. Return the line voltage to 115 volts.

TABLE 5-5

Power Supply Tolerance and Ripple

Power Supply	Test Point	Tolerance	Typical Ripple (peak-to-peak)
+55 volt	TP1536	± 0.5%	4 mV
+15 volt	TP1548	± 1.5%	2 mV
+5 volt	TP1558	± 1.5%	2 mV
−8 volt	TP1568	± 1.5%	2 mV
+120 volt	CR1516 Anode		≈1.0 V
+110 volt	TP1518	±2.0%	40 mV

2. Adjust High Voltage Supply

a. Connect the DC Voltmeter between −2450 volt test point and ground (positive meter lead to ground). −2450 test point is accessible through the hole in the high voltage cover. (See Fig. 5-3.)

b. CHECK—Meter for a reading of −2450 volts ± 49 volts.

c. ADJUST—High Voltage adjustment R1400 (see Fig. 5-3) for a meter reading of −2450 volts (± 24.5 volts).

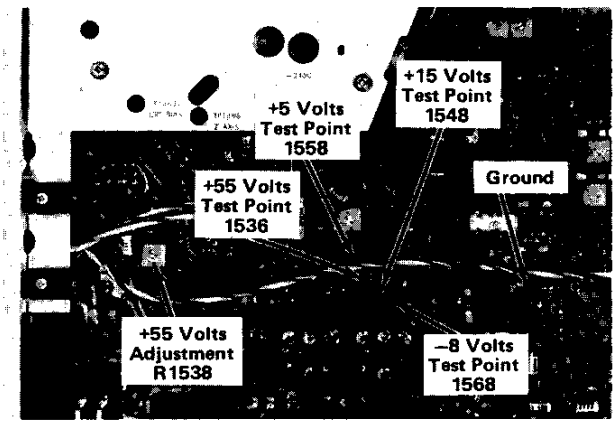

Fig. 5-2. Low-voltage power supply test points and adjustment locations. See Fig. 7-21A and 7-21B for alternate test point locations.

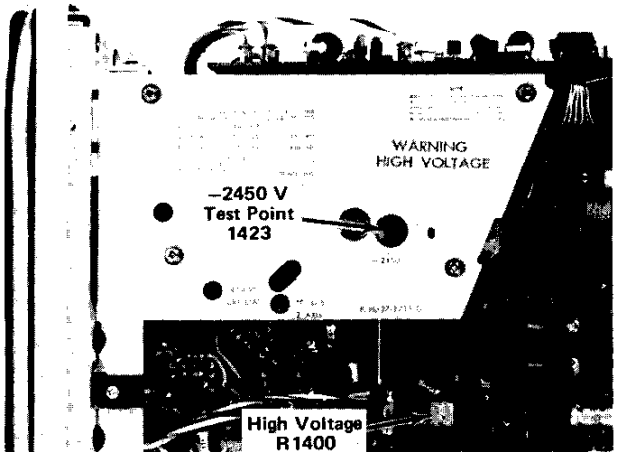

Fig. 5-3. High-voltage test point and adjustment locations.

5. Adjust Trace Alignment

a. Position the trace to the center horizontal graticule line.

b. CHECK—That the trace is parallel with the center horizontal line.

c. ADJUST—TRACE ROTATION adjustment (front panel adjustment) to make the trace parallel to the center horizontal line.

6. Adjust Y Axis Alignment

a. Connect 0.1 ms time markers from the Time-Mark Generator to the CH 1 input connector via a 42-inch 50 Ω BNC cable and a 50 Ω BNC termination.

b. Set the CH 1 INPUT COUPLING switch to DC and the CH 1 VOLTS/DIV switch to 0.1 V.

c. Adjust the A LEVEL control for a stable display; ASTIG and FOCUS controls for a well-defined display.

d. Adjust the VAR TIME/DIV control for 1 time marker/division.

e. CHECK—For no more than 0.1 division of tilt of the center time marker as compared with the center vertical graticule line.

f. ADJUST—Y Axis Alignment adjustment, R1446, (see Fig. 5-5) to align the center time marker with the center vertical graticule line.

g. INTERACTION—Between Y Axis alignment and TRACE ROTATION adjustments. Readjust until there is no further interaction.

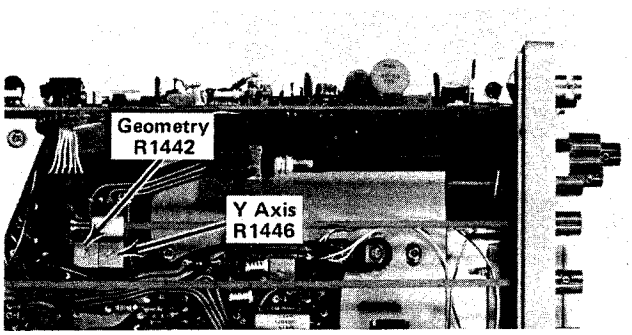

Fig. 5-5. Location of Geometry and Y Axis adjustments.

7. Adjust Geometry

a. CHECK—CRT display for no more than 0.1 division vertical curvature of the markers across the graticule area.

b. ADJUST—Geometry adjustment, R1442, (see Fig. 5-5) for minimum curvature of the markers across the graticule area.

c. Remove the test signal from CH 1 input.

d. CHECK—For no more than 0.1 division of curvature of the trace when positioned from top to bottom of the graticule area.

e. INTERACTION—Between Geometry and Y Axis Alignment adjustments. Adjust both for optimum response.

8. Adjust Z Axis Compensation

a. Set A TIME/DIV to 0.05 μs and test oscilloscope TIME/DIV to 0.05 μs with vertical deflection of 0.5 V/division (5 volts/division with probe).

b. Connect the X10 probe from the Test Oscilloscope to TP1486 (see Fig. 5-6).

c. Adjust the 465 INTENSITY control for a 15 volt display on the Test Oscilloscope.

d. CHECK—Test Oscilloscope display for optimum square corner on the unblanking gate.

e. ADJUST—Z-Axis Compensation adjustment, C1471, using low capacitance screwdriver, (see Fig. 5-6) for optimum square corner on the unblanking gate.

f. Disconnect the test setup.

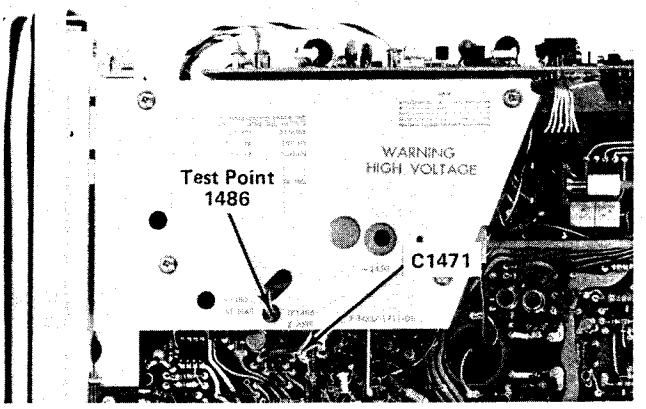

Fig. 5-6. Location of Z-Axis compensation adjustment and test point 1486.

VERTICAL SYSTEM CALIBRATION

Equipment Required

1. High-Frequency Constant-Amplitude Signal Generator (067-0532-01)
2. Medium-Frequency Constant-Amplitude Signal Generator (Type 191)
3. Fast-Rise High-Amplitude Pulse Generator (Type 109)
4. Standard Amplitude Calibrator (067-0502-01)
5. Test Oscilloscope
6. GR-to-BNC Adapter
7. 50 Ω BNC Termination
8. 42-inch 50 Ω BNC Cables (two)
9. X10 Probes (two)
10. X10 BNC Attenuators (two)
11. X10 GR Attenuator
12. 20 pF Input RC Normalizer
13. Low-Capacitance Screwdriver
14. Three-Inch Screwdriver
15. DC Voltmeter
16. Square-Wave Generator (Type 106)

Control Settings

Preset instrument controls to the settings given under Preliminary Control Settings except as follows:

CH 1 VOLTS/DIV 0.2 V

9. Adjust Vertical Output Amplifier Bias

NOTE

See insert M20159 for calibration of alternate version of Vertical Output amplifier.

a. Connect the High-Frequency Constant-Amplitude Signal Generator (067-0532-01) output to the CH 1 input via a GR-to-BNC female adapter and a 50 Ω BNC termination.

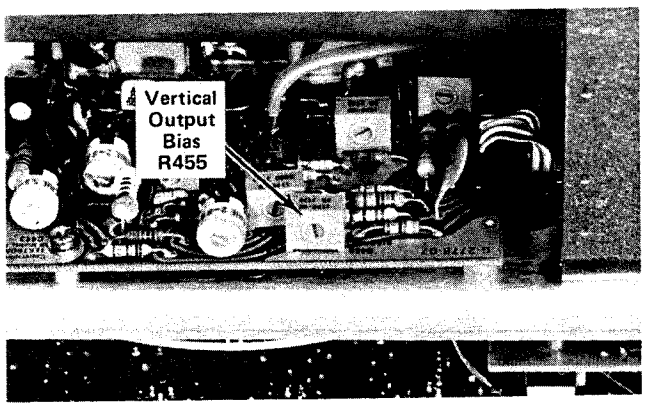

Fig. 5-7. Location of Vertical Output Bias adjustment.

b. Adjust the signal generator for a 100 MHz sinewave output.

c. ADJUST—Vertical Output Bias adjustment, R455, (see Fig. 5-7) for maximum deflection of signal.

d. INTERACTION—Affects vertical risetime, aberrations, and position effect. This adjustment may be slightly misadjusted for optimum performance of the vertical system.

e. Disconnect the test setup.

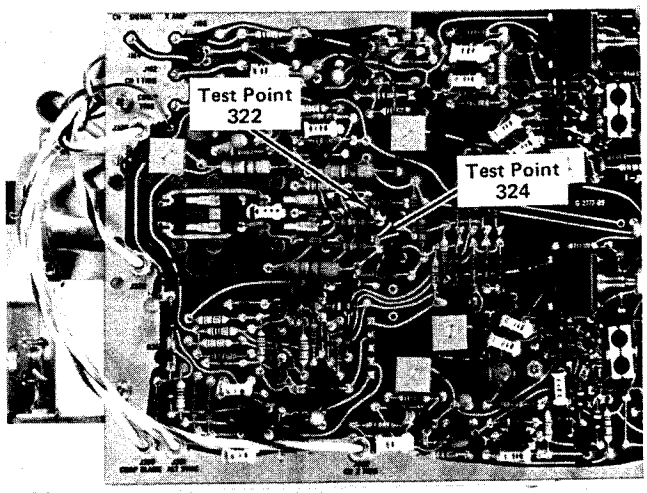

Fig. 5-8. Location of test points 322 and 324.

10. Adjust Vertical Output Centering and Check BEAM FIND

a. Connect the DC Voltmeter between TP322 and TP324 (see Fig. 5-8).

b. Adjust the CH 1 POSITION control for a 0 volt reading on the meter.

c. ADJUST—Vertical Output Centering adjustment, R429, (see Fig. 5-9) to position the trace to the center graticule line.

d. Remove the DC Voltmeter lead connections.

e. Position the trace off-screen with the CH 1 POSITION and horizontal POSITION controls.

f. Push the BEAM FIND button and hold it in.

g. CHECK—That the trace is brought into the CRT viewing area.

h. Release the BEAM FIND button.

11. Adjust CH 1 Step Attenuator Balance

a. Set the CH 1 VOLTS/DIV switch to 20 mV and the CH 1 INPUT COUPLING switch to GND.

b. Position the trace to the center horizontal graticule line.

c. CHECK—CRT display for 0.2 division or less of trace shift between adjacent switch positions when rotating the CH 1 VOLTS/DIV switch from 20 mV to 5 mV.

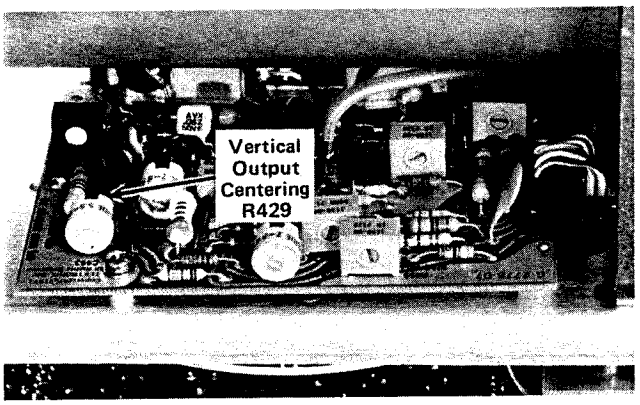

Fig. 5-9. Location of Vertical Output Centering adjustment.

d. ADJUST—CH 1 Step Atten Bal adjustment, R25, (see Fig. 5-10) for minimum trace shift when rotating the CH 1 VOLTS/DIV switch from 20 mV to 5 mV.

12. Adjust CH 1 Variable Volts/Division Balance

a. Position the trace to the center horizontal graticule line.

b. CHECK—That the CH 1 UNCAL light comes on when the VAR control is out of the detent position.

c. CHECK—CRT display for 1.0 division or less of trace shift when rotating the CH 1 VAR control through its range.

d. ADJUST—CH 1 Variable Balance adjustment, R120, (see Fig. 5-11) for minimum trace shift when rotating the CH 1 VAR control through its range.

e. Return the CH 1 VAR control to the detent position.

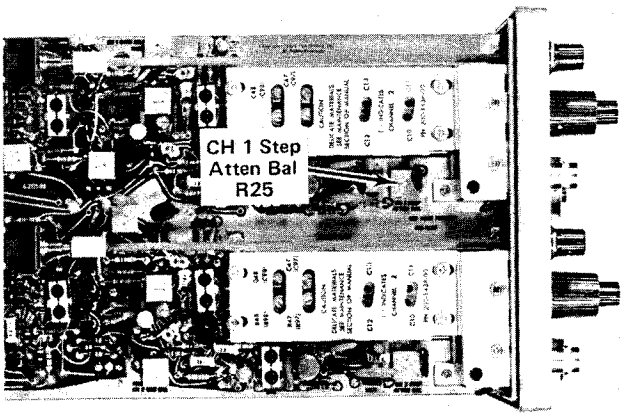

Fig. 5-10. Location of CH 1 Step Atten Bal adjustment.

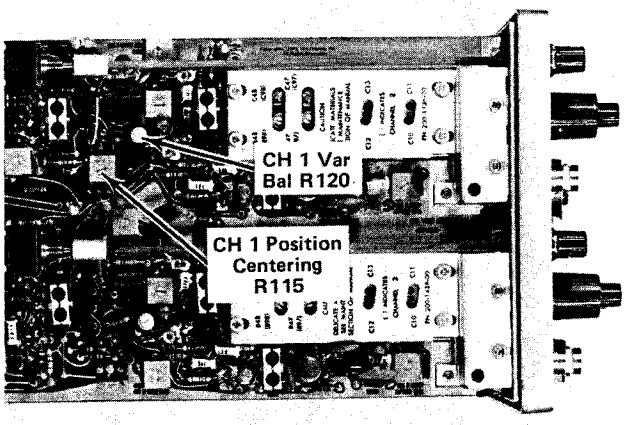

Fig. 5-11. Location of CH 1 Variable Balance and Position Centering adjustment.

13. Check Probe Indicator Lights

a. Set both VOLTS/DIV switches to 5 mV.

b. Connect a X10 probe with a scale-factor switching connector to the CH 1 input connector.

c. CHECK—Light under 5 mV is extinguished and the light under 50 mV comes on.

d. Set VERT MODE switch to CH 2.

e. Move the probe to the CH 2 input.

f. CHECK—Light under 5 mV is extinguished and the light under 50 mV comes on.

g. Remove the X10 probe.

14. Check INPUT COUPLING Switches

a. Set both INPUT COUPLING switches to DC.

b. Connect the Standard Amplitude Calibrator output to the CH 2 input via a 42-inch 50 Ω BNC cable.

c. Adjust the Standard Amplitude Calibrator for 20 mV output.

d. Position the bottom of the display to the center horizontal graticule line.

e. Set CH 2 INPUT COUPLING switch to GND.

f. CHECK—For no vertical deflection; trace is at center horizontal graticule line.

g. Set CH 2 INPUT COUPLING switch to AC.

h. CHECK—That display is centered about the center horizontal graticule line.

i. Move the test signal to CH 1.

j. Position the bottom of the display to the center horizontal graticule line.

k. Set CH 1 INPUT COUPLING switch to GND.

l. Repeat step 14-f.

m. Set CH 1 INPUT COUPLING switch to AC.

n. Repeat step 14-h.

15. Adjust CH 1 Position Centering

a. Set the CH 1 VOLTS/DIV switch to 20 mV.

b. Adjust the Standard Amplitude Calibrator for 500 mV output.

c. CHECK—That the top of the CRT display can be positioned down to 1/2-division above the center horizontal graticule line, and the bottom of the display can be positioned up to 1/2-division below the center horizontal graticule line.

d. ADJUST—CH 1 Position Centering adjustment, R115, (see Fig. 5-11) so that the top of the CRT display can be positioned down to 1/2-division above the center horizontal graticule line, and the bottom of the display can be positioned up to 1/2-division below the center horizontal graticule line.

e. INTERACTION—Between CH 1 Position Centering and CH 1 Variable Volts/Division Balance adjustments. Re-adjust both until no interaction is visible.

16. Adjust CH 2 Step Attenuator Balance

a. Set the VERT MODE switch to CH 2; CH 2 VOLTS/DIV switch to 20 mV.

b. Position the trace to the center horizontal graticule line.

c. CHECK—CRT display for 0.2 division or less of trace shift between adjacent switch positions when rotating the CH 2 VOLTS/DIV switch from 20 mV to 5 mV.

d. ADJUST—CH 2 Step Atten Bal adjustment, R75, (see Fig. 5-12) for minimum trace shift when rotating the CH 2 VOLTS/DIV switch from 20 mV to 5 mV.

g. ADJUST—CH 1 Gain adjustment, R118, (see Fig. 5-14) for 200 mV (peak-to-peak) display on the Test Oscilloscope. (NOTE: This is a nominal value for this adjustment and may vary from instrument to instrument.

h. Remove the X10 probes from TP322 and TP324.

i. CHECK—CRT display for 4 divisions of deflection within 3% (0.12 div).

j. ADJUST—Vertical Output Gain adjustment, R400, (see Fig. 5-15) for 4 divisions of deflection.

k. CHECK—Accuracy of CH 1 VOLTS/DIV switch using the settings given in Table 5-6 to see if the deflection factor accuracy for each position is within 3%.

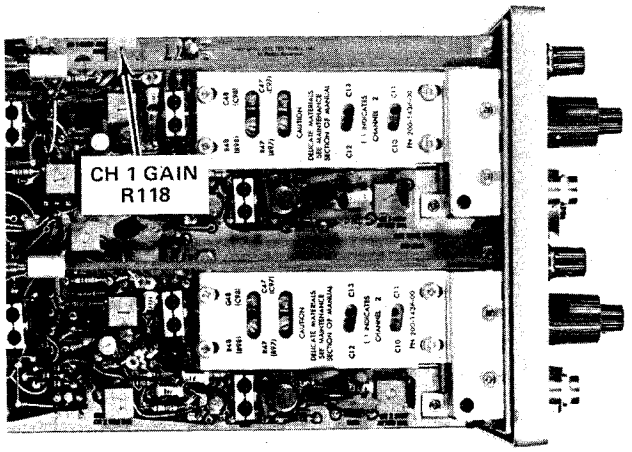

Fig. 5-14. Location of CH 1 Gain adjustment.

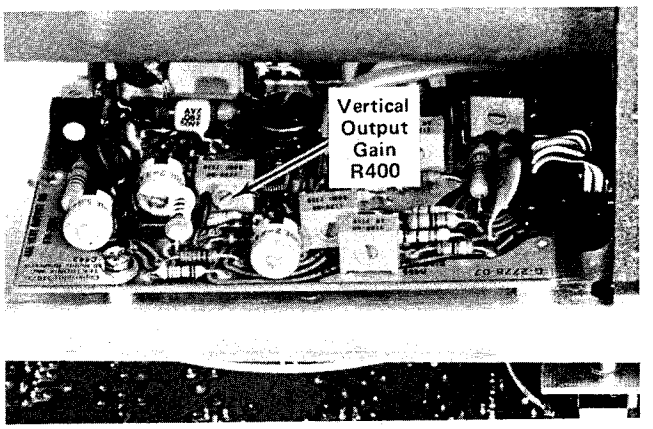

Fig. 5-15. Location of Vertical Output Gain adjustment.

21. Adjust CH 2 Gain

a. Set the CH 2 VOLTS/DIV switch to 5 mV, the VERT MODE switch to CH 2, and the CH 2 INPUT COUPLING switch to DC.

b. Move the test signal to CH 2 input connector.

c. Adjust the Standard Amplitude Calibrator for a 20 mV output.

d. CHECK—CRT display for 4 divisions of deflection within 3%.

e. ADJUST—CH 2 Gain adjustment R218 (see Fig. 5-16) for 4 divisions of deflection.

f. CHECK—Accuracy of the CH 2 VOLTS/DIV switch using the settings given in Table 5-6. Deflection factor accuracy to be within 3% in all switch positions.

TABLE 5-6

Vertical Deflection Accuracy

VOLTS/DIV Switch Setting	Standard Amplitude Calibrator Output	Vertical Deflection in Divisions	Maximum Error for 3% Accuracy
5 m	20 millivolts	4	Previously set
10 m	50 millivolts	5	±0.15 division
20 m	0.1 volt	5	±0.15 division
50 m	0.2 volt	4	±0.12 division
.1	0.5 volt	5	±0.15 division
.2	1 volt	5	±0.15 division
.5	2 volts	4	±0.12 division
1	5 volts	5	±0.15 division
2	10 volts	5	±0.15 division
5	20 volts	4	±0.12 division

17. Adjust CH 2 Variable Volts/Division Balance

a. CHECK—That the CH 2 UNCAL light comes on when the CH 2 VAR control is out of the detent position.

b. CHECK—CRT display for 1.0 division or less of trace shift when rotating the CH 2 VAR control through its range.

c. ADJUST—CH 2 Variable Balance adjustment, R220, (see Fig. 5-13) for minimum trace shift when rotating the CH 2 VAR control through its range.

d. Return the VAR control to the detent position.

18. Adjust CH 2 Position Centering

a. Move the test signal from CH 1 to the CH 2 input.

b. Set the CH 2 VOLTS/DIV switch to 20 mV; and the VERT MODE switch to CH 2.

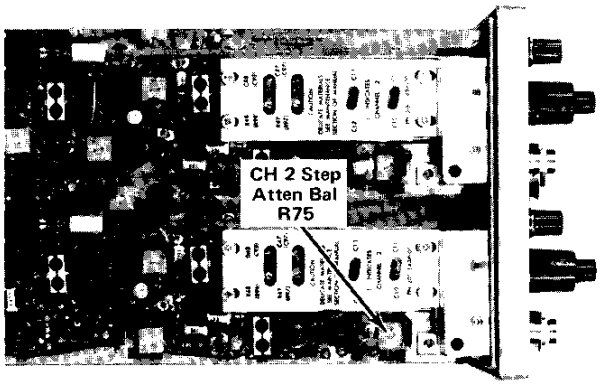

Fig. 5-12. Location of CH 2 Step Atten Bal adjustment.

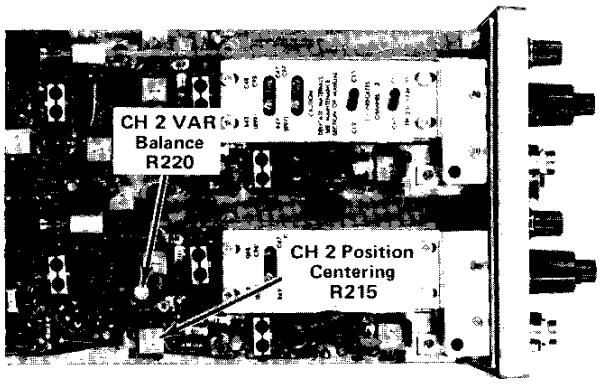

Fig. 5-13. Location of CH 2 Variable Balance and Position Centering adjustments.

c. Adjust the Standard Amplitude Calibrator for a 500 mV output.

d. CHECK—That the top of the CRT display can be positioned down to 1/2-division above the center horizontal graticule line, and the bottom of the display can be positioned up to 1/2-division below the center horizontal graticule line.

e. ADJUST—CH 2 Position Centering adjustment, R215, (see Fig. 5-13) so that the top of the CRT display can be positioned down to 1/2-division above the center horizontal graticule line, and the bottom of the display can be positioned up to 1/2-division below the center horizontal graticule line.

f. INTERACTION—Between CH 2 Position Centering and CH 2 Variable Volts/Division Balance adjustments. Re-adjust both until no interaction is visible.

19. Check CH 2 INVERT Balance

a. Set the CH 2 INPUT COUPLING switch to GND.

b. Position the trace to the center horizontal graticule line.

c. Push the INVERT button.

d. CHECK—For less than 2 division of trace shift when switching from normal to inverted.

20. Adjust CH 1 Gain

a. Set the VERT MODE switch to CH 1, the CH 1 VOLTS/DIV switch to 5 mV, and the CH 1 INPUT COUPLING switch to DC.

b. Move the test signal to the CH 1 input.

c. Adjust the Standard Amplitude Calibrator for a 20 mV output.

d. Set the Test Oscilloscope: Vertical Mode to ADD, Channel 2 to INVERT, and both VOLTS/DIV switches to 5 mV.

e. Connect two X10 probes from the Test Oscilloscope to TP322 and TP324 on the Preamp board of the 465 (see Fig. 5-8).

f. CHECK—The Test Oscilloscope for a 200 mV (peak-to-peak) signal between TP322 and TP324.

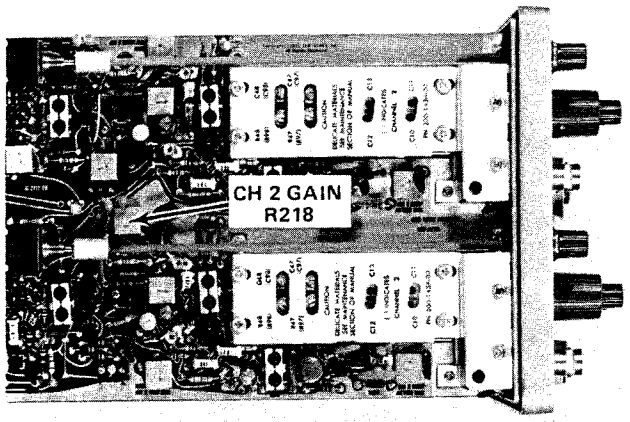

Fig. 5-16. Location of CH 2 Gain adjustment.

22. Check CH 2 and CH 1 Variable Volts/Division Ranges

a. Adjust the Standard Amplitude Calibrator for 5 divisions of deflection.

b. Rotate the CH 2 VAR control fully counterclockwise.

c. CHECK—CRT display reduces to less than 2 divisions.

d. Move the test signal to the CH 1 input connector.

e. Set the VERT MODE switch to CH 1.

f. Adjust the Standard Amplitude Calibrator for 5 divisions of deflection.

g. Rotate the CH 1 VAR control fully counterclockwise.

h. CHECK—CRT display reduces to less than 2 divisions.

i. Return the VAR controls to the detent positions.

23. Check Vertical ADD Mode Operation

a. Set both VOLTS/DIV switches to 5 mV and both INPUT COUPLING switches to DC.

b. Connect the Standard Amplitude Calibrator output to both channel inputs via a dual input coupler.

c. Adjust the Standard Amplitude Calibrator for a 10 mV output.

d. Set the VERT MODE switch to ADD.

e. CHECK—If CH 1 and CH 2 Gain adjustments were changed, check for 4 divisions of deflection within 1% (within 3% if CH 1 and CH 2 Gain adjustments were not changed).

24. Check Compression and Expansion

a. Set the CH 2 INPUT COUPLING switch to GND and the VERT MODE switch to CH 1.

b. Adjust the CH 1 VAR control for 2 divisions of deflection centered about the center horizontal graticule line.

c. Position the top of the display to the top graticule line.

d. CHECK—CRT display for 0.1 division or less of compression or expansion.

e. Position the bottom of the display to the bottom graticule line.

f. CHECK—CRT display for 0.1 division or less of compression or expansion.

g. Set the CH 1 VAR control to the detent position.

h. Disconnect the test setup.

25. Check Vertical ALT Mode Operation

a. Set the VERT MODE switch to ALT, and the A Trigger LEVEL control fully clockwise.

b. Position the two traces 2 divisions apart.

c. CHECK—That the sweeps alternate at all settings of the A TIME/DIV switch except X-Y.

For Service Manuals
MAURITRON SERVICES
8 Cherry Tree Road, Chinnor
Oxfordshire, OX9 4QY.
Tel (01844) 351694
Fax (01844) 352554
email:- mauritron@dial.pipex.com

26. Check Vertical CHOP Mode Operation

a. Set the A TIME/DIV switch to 1 μs, the A SOURCE switch to NORM, the A SLOPE switch to +, the VERT MODE switch to CHOP, and both INPUT COUPLING switches to GND.

b. Position the two traces about 4 divisions apart.

c. Adjust the A LEVEL control for a stable display.

d. CHECK—For complete blanking of switching transients between chopped segments (see Fig. 5-17).

e. CHECK—Duration of each cycle is about four divisions.

27. Adjust Vertical Output Low-Frequency Compensation

a. Set the A TIME/DIV switch to 0.2 ms, the VERT MODE switch to CH 1, both INPUT COUPLING switches to DC, and both VOLTS/DIV switches to 5 mV.

b. Connect the fast-rise output of the Square-Wave Generator (Type 106) to the CH 1 input via a GR-to-BNC adapter, 42-inch 50 Ω BNC cable, X10 BNC attenuator, and a 50 Ω BNC termination.

c. Adjust the Square-Wave Generator to maintain a five division display throughout this step.

d. Adjust the Square-Wave Generator for a 1 kHz signal output.

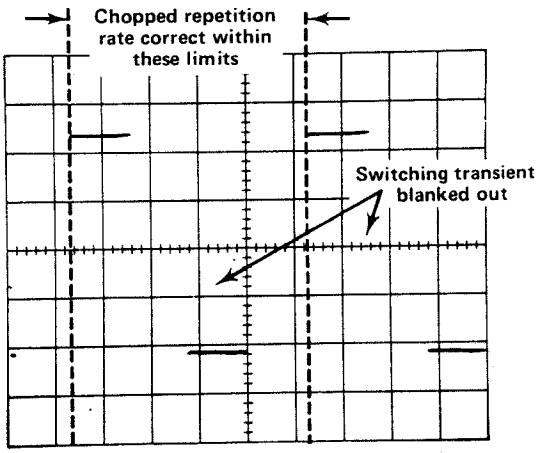

Fig. 5-17. Typical CRT display when checking chopped repetition rate and blanking.

e. Adjust the A LEVEL control for a stable display.

f. CHECK—CRT display for flat-top waveform with no more than 3% overshoot or roll-off on the leading edge.

g. ADJUST—R424 (see Fig. 5-18) for best flat-top waveform.

h. Set the A TIME/DIV switch to 20 μs and adjust the Square-Wave Generator for a 10 kHz signal output.

i. CHECK—CRT display for flat-top waveform with no more than 3% overshoot or roll-off on the leading edge.

j. ADJUST—R434 (see Fig. 5-18) for best flat-top waveform.

k. Set the A TIME/DIV switch to 2 μs and adjust the Square-Wave Generator for a 100 kHz signal output.

l. CHECK—CRT display for flat-top waveform with no more than 3% overshoot or roll-off on the leading edge.

m. ADJUST—R433 (see Fig. 5-18) for best flat-top waveform.

n. INTERACTION—Between all adjustments in this step. Re-adjust, if necessary, for total optimum response.

28. Adjust CH 1 VOLTS/DIV Compensation

a. Add a 20 pf Normalizer to the test setup between the 50 Ω BNC termination and the CH 1 input.

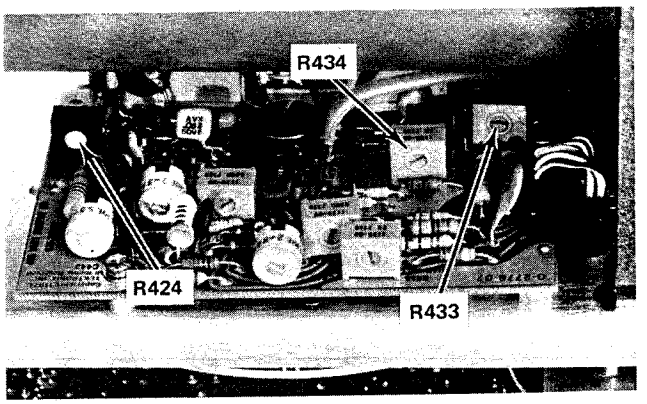

Fig. 5-18. Location of Vertical Output Low-Frequency Compensation adjustments.

b. Move the test setup from the fast-rise output to the high-amplitude output of the Square-Wave Generator (Type 106) and adjust the generator for a one-kilohertz output signal.

c. Adjust the Square-Wave Generator for a five division display. Add or remove attenuators as necessary to maintain a five division display throughout this step.

d. CHECK—CRT display for flat-top waveform with no more than 2% overshoot or roll-off on the leading edge.

e. ADJUST—C1 (see Fig. 5-19) with the low-capacitance screwdriver for best flat-top waveform.

f. Set the CH 1 VOLTS/DIV switch to 50 mV.

g. CHECK—CRT display for flat-top waveform with no more than 2% overshoot or roll-off on the leading edge.

h. ADJUST—Channel 1 C13 (see Fig. 5-19) for best flat-top waveform, and Channel 1 C12 for the best corner with the low-capacitance screwdriver.

i. CAL AID—Remove the 20 pf Normalizer when adjusting or checking the corner response.

j. INTERACTION—Between Channel 1's C13 and C12. Readjust both for total optimum response.

k. Set the CH 1 VOLTS/DIV switch to 0.5 V.

l. CHECK—CRT display for flat-top waveform with no more than 2% overshoot or roll-off on the leading edge.

m. ADJUST—Channel 1 C11 (see Fig. 5-19) for best flat-top waveform, and Channel 1 C10 for the best corner, with the low-capacitance screwdriver.

n. Set the CH 1 VOLTS/DIV switch to 5 V.

o. CHECK—CRT display for flat-top waveform with no more than 2% overshoot or roll-off on the leading edge.

29. Adjust CH 2 VOLTS/DIV Compensation

a. Set the VERT MODE switch to CH 2 and move the test signal to the CH 2 input.

b. Adjust the Square-Wave Generator (Type 106) for a five-division display. Remove or add attenuators as necessary to maintain a five-division display.

c. CHECK—CRT display for flat-top waveform with no more than 2% overshoot or roll-off on the leading edge.

d. ADJUST—C51 (see Fig. 5-20) with the low-capacitance screwdriver, for best flat-top waveform.

e. Set the CH 2 VOLTS/DIV switch to 50 mV.

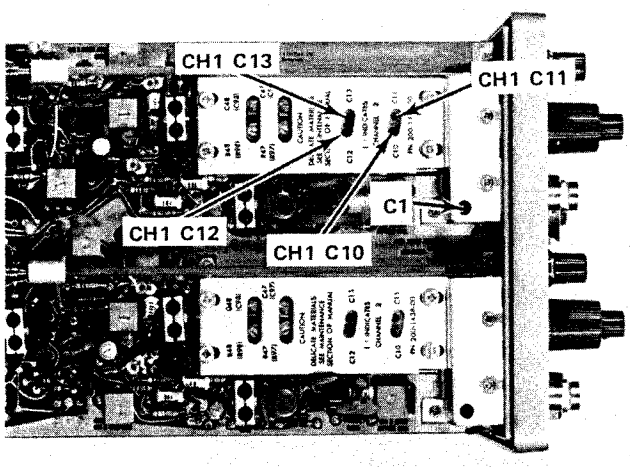

Fig. 5-19. Location of CH 1 volts/div compensation adjustments.

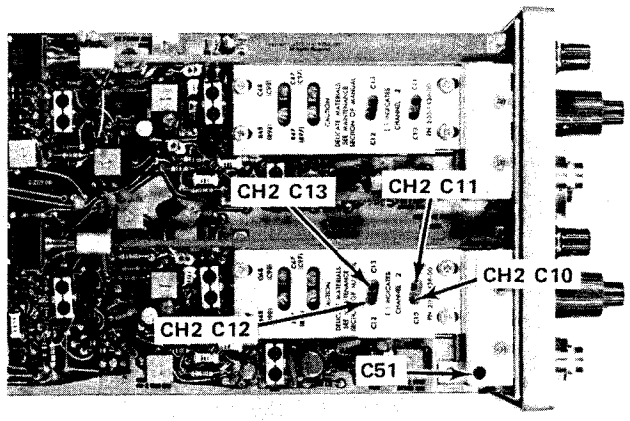

Fig. 5-20. Location of CH 2 volts/div compensation adjustments.

f. CHECK—CRT display for flat-top waveform with no more than 2% overshoot or roll-off on the leading edge.

g. ADJUST—Channel 2 C13 (see Fig. 5-20) for best flat-top waveform, and Channel 2 C12 for the best corner, with the low-capacitance screwdriver.

h. CAL AID—Remove the 20 pf Normalizer when adjusting or checking the corner response.

i. INTERACTION—Between Channel 2's C13 and C12. Readjust both for total optimum response.

j. Set the CH 2 VOLTS/DIV switch to 0.5 V.

k. CHECK—CRT display for flat-top waveform with no more than 2% overshoot or roll-off on the leading edge.

l. ADJUST—Channel 2 C11 (see Fig. 5-20) for best flat-top waveform, and Channel 2 C10 for the best corner, with the low-capacitance screwdriver.

m. INTERACTION—Between Channel 2's C11 and C10. Readjust both for optimum response.

n. Set the CH 2 VOLTS/DIV switch to 5 V.

o. CHECK—CRT display for flat-top waveform with no more than 2% overshoot or roll-off on the leading edge.

p. Disconnect the test setup.

30. Adjust Channel 2 and Vertical Output High-Frequency Compensation

a. Set both VOLTS/DIV switches to 5 mV, the VERT MODE switch to CH 2, the A TIME/DIV switch to 0.05 μs, and the A SLOPE to +.

b. Connect the Fast-Rise High-Amplitude Pulse Generator (Type 109) with Charge Line (Type 113) to the CH 2 input via a GR-to-BNC adapter, 42-inch 50 Ω BNC cable, two X10 BNC attenuators, and a 50 Ω BNC termination.

c. Set the Pulse Generator polarity to + and the voltage range to 50 V.

d. Adjust the Pulse Generator for five divisions of deflection. Remove or add attenuators as necessary to maintain a five division display throughout this step.

e. CHECK—CRT display for risetime of 3.5 nanoseconds or less.

f. CHECK—CRT display for flat-top waveform with 3% or less of aberrations.

g. ADJUST—C77, C83, C205, R205, C249, R249, C402, C442, R442, and C443 (see Fig. 5-21 and 5-22) with a low-capacitance screwdriver, for the best flat-top waveform.

h. Set the Pulse Generator polarity to — and the 465 A SLOPE switch to —.

i. CHECK—CRT display for flat-bottom waveform with 5% or less of aberrations.

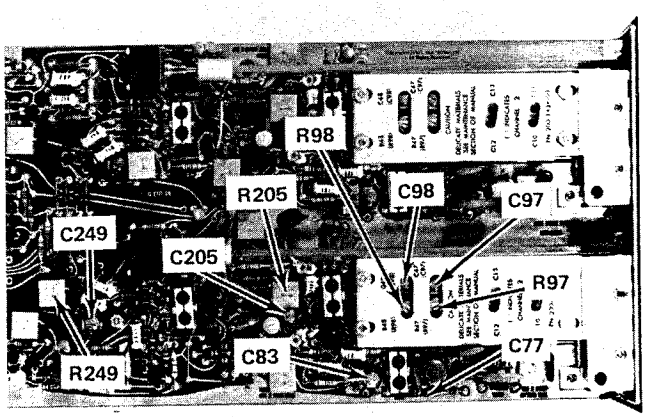

Fig. 5-21. Location of part of the CH 2 High-Frequency Compensation adjustments.

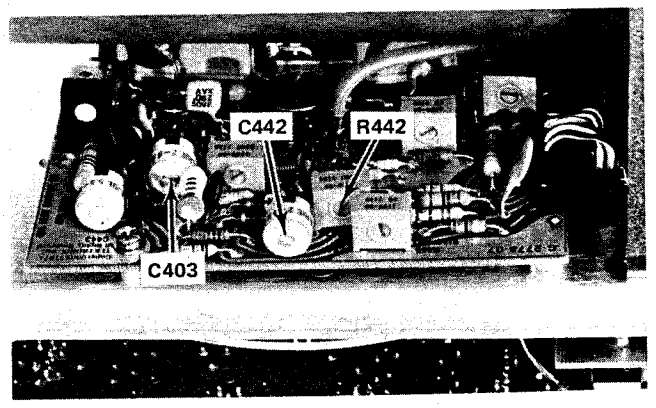

Fig. 5-22. Location of Vertical Output High-Frequency Compensation adjustments.

j. CAL AID—The above adjustments also affect the negative-step aberrations. Adjust for optimum response and minimum aberrations on both the positive- and negative-going steps.

k. Set the A SLOPE control to + and the Pulse Generator polarity to +.

l. Set the CH 2 VOLTS/DIV switch to 10 mV.

m. CHECK—CRT display for risetime of 3.5 nanoseconds or less.

n. CHECK—CRT display for flat-top waveform with 3% or less of aberrations.

o. ADJUST—R97 and C97 (see Fig. 5-21) for optimum risetime and aberrations.

p. Set the Pulse Generator polarity to – and the 465 A SLOPE switch to –.

q. CHECK—CRT display for best corner and flat-bottom waveform with 5% or less aberrations.

r. Set the CH 2 VOLTS/DIV switch to 20 mV and the A SLOPE switch to +.

s. Set the Pulse Generator polarity to +.

t. CHECK—CRT display for risetime of 3.5 nanoseconds or less.

u. CHECK—CRT display for flat-top waveform with 3% or less of aberrations.

v. ADJUST—R98 and C98 (see Fig. 5-21) for optimum risetime and aberrations.

w. Set the Pulse Generator polarity to – and the 465 A SLOPE switch to –.

x. CHECK—CRT display for flat-bottom waveform with 5% or less of aberrations.

y. Set the CH 2 VOLTS/DIV switch to 50 mV.

z. Set the A SLOPE switch to + and the Pulse Generator polarity to +.

aa. CHECK—CRT display for risetime of 3.5 nanoseconds or less.

ab. CHECK—CRT display for flat-top waveform with 3% or less of aberrations.

ac. Set the Pulse Generator polarity to – and the 465 A SLOPE switch to –.

ad. CHECK—CRT display for best corner and flat-bottom waveform with 5% or less aberrations.

ae. Repeat step 30-z through 30-ad for each setting of the CH 2 VOLTS/DIV switch from 0.1 V to 5 V.

31. Check CH 2 Position Effect

a. Set the CH 2 VOLTS/DIV switch to 5 mV.

b. Adjust the Pulse Generator (Type 109) for five divisions of display.

c. Adjust the A LEVEL control for a stable display.

d. Position the top of the display to the bottom graticule line.

e. CHECK—CRT display for less than 5% aberrations.

f. Set the Pulse Generator polarity to – and the 465 A SLOPE switch to –.

g. Position the bottom of the display to the top graticule line.

h. CHECK—CRT display for less than 7% aberrations.

32. Adjust CH 1 High-Frequency Compensation

a. Move the test signal from CH 2 to the CH 1 input.

b. Set the A TIME/DIV switch to 0.05 μs, the A SLOPE switch to +, and the VERT MODE switch to CH 1.

c. Set the Fast-Rise High-Amplitude Pulse Generator (Type 109) to + and adjust the Pulse Generator for five divisions of deflection. Remove or add attenuators as necessary to maintain a five-division display throughout this step.

d. CHECK—CRT display for risetime of 3.5 nanoseconds or less.

e. CHECK—CRT display for flat-top waveform with 3% or less of aberrations.

f. ADJUST—C27, C33, C105, R105, C122, R122, C149, and R149 (see Fig. 5-23) with a low-capacitance screwdriver, for the best flat-top waveform.

g. Set the Pulse Generator polarity to — and the 465 A SLOPE switch to —.

h. CHECK—CRT display for flat-bottom waveform with 5% or less of aberrations.

i. CAL AID—The above adjustments also affect the negative-step aberrations. Adjust them for optimum response and minimum aberrations on both the positive- and negative-going steps.

j. Set the A SLOPE control to + and the Pulse Generator polarity to +.

k. Set the CH 1 VOLTS/DIV switch to 10 mV.

l. CHECK—CRT display for risetime of 3.5 nanoseconds or less.

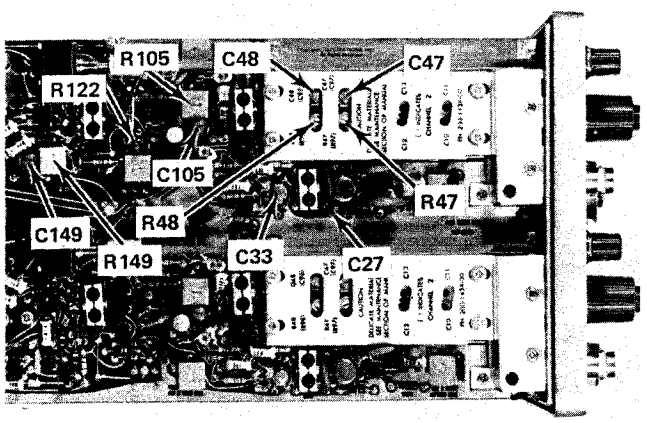

Fig. 5-23. Location of CH 1 High-Frequency Compensation adjustment.

m. CHECK—CRT display for flat-top waveform with 3% or less of aberrations.

n. ADJUST—R47 and C47 (see Fig. 5-23) for optimum risetime and aberrations.

o. Set the Pulse Generator polarity to — and the 465 A SLOPE switch to —.

p. CHECK—CRT display for best corner and flat-bottom waveform with 5% or less aberrations.

q. Set the CH 1 VOLTS/DIV switch to 20 mV and the A SLOPE switch to +.

r. Set the Pulse Generator polarity to +.

s. CHECK—CRT display for risetime of 3.5 nanoseconds or less.

t. CHECK—CRT display for flat-top waveform with 3% or less of aberrations.

u. ADJUST—R48, and C48 (see Fig. 5-23) for optimum risetime and aberrations.

v. Set the Pulse Generator polarity to — and the 465 A SLOPE switch to —.

w. CHECK—CRT display for flat-bottom waveform with 5% or less of aberrations.

x. Set the CH 1 VOLTS/DIV switch to 50 mV.

y. Set the A SLOPE switch to + and the Pulse Generator polarity to +.

z. CHECK—CRT display for risetime of 3.5 nanoseconds or less.

aa. CHECK—CRT display for flat-top waveform with 3% or less of aberrations.

ab. Set the Pulse Generator polarity to — and the 465 A SLOPE switch to —.

ac. CHECK—CRT display for best corner and flat-bottom waveform with 5% or less aberrations.

ad. Repeat step 32-y through 32-ac for each setting of the CH 1 VOLTS/DIV switch from 0.1 V to 5 V.

33. Check CH 1 Position Effect

a. Set the CH 1 VOLTS/DIV switch to 5 mV.

b. Adjust the Pulse Generator (Type 109) for five divisions of display.

c. Adjust the A LEVEL control for a stable display.

d. Position the top of the display to the bottom graticule line.

e. CHECK—CRT display for less than 5% aberrations.

f. Set the Pulse Generator polarity to – and the 465 A SLOPE switch to –.

g. Position the bottom of the display to the top graticule line.

h. CHECK—CRT display for less than 7% aberrations.

i. Disconnect the test setup.

34. Check Vertical Amplifier Bandwidth

a. Connect the output of the High-Frequency Constant-Amplitude Signal Generator (067-0532-01) to the CH 1 input via a GR-to-BNC adapter, X10 BNC attenuator, and a 50 Ω BNC termination.

b. Set the TRIG MODE switch to AUTO, A TIME/DIV switch to 0.2 ms, both VOLTS/DIV switches to 5 mV and the VERT MODE switch to CH 1.

c. Adjust the High-Frequency signal generator output amplitude for a five division display of a 3 megahertz reference signal.

d. Without changing the output amplitude, increase the output frequency of the signal generator until the display is reduced to 3.5 divisions.

e. CHECK—Output frequency of the signal generator must be at least 100 megahertz (0°C to +40°C).

f. Repeat this bandwidth check procedure, steps 34-c through 34-e, for settings of the CH 1 VOLTS/DIV switch from 10 mV to 2 V.

g. Move the test signal to CH 2 input, set the VERT MODE switch to CH 2, and the CH 2 INPUT COUPLING switch to DC.

h. Repeat this bandwidth check, step 34-c through 34-e, for settings of the CH 2 VOLTS/DIV switch from 5 mV to 2 V.

i. Disconnect the test setup.

35. Check Cascaded Gain and Bandwidth

a. Set both INPUT COUPLING switches to DC, the VERT MODE switch to CH 2, both VOLTS/DIV switches to 5 mV, and the A TIME/DIV switch to 1 ms.

b. Connect the CH 1 VERT SIGNAL OUT (on the rear panel) to the CH 2 input connector via a 42-inch 50 Ω BNC cable and a 50 Ω BNC termination.

c. Connect the Standard Amplitude Calibrator to the CH 1 input via a 42-inch 50 Ω BNC cable.

d. Adjust the Standard Amplitude Calibrator for a 5 mV output.

e. CHECK—CRT display for at least five divisions of deflection.

f. Remove the test setup from the CH 1 input.

g. Connect the output of the Medium-Frequency Constant-Amplitude Signal Generator (Type 191) to the CH 1 input via a GR-to-BNC adapter, 42-inch 50 Ω BNC cable, X10 BNC attenuator, and a 50 Ω BNC termination.

h. Adjust the Medium-Frequency signal generator for a five-division display of a 50 kilohertz reference signal.

i. Without changing the output amplitude of the signal generator, increase the output frequency until the display is reduced to 3.5 divisions.

j. CHECK—Output frequency of the signal generator must be at least 50 megahertz.

k. Disconnect the test setup.

36. Check Vertical Channel Isolation

a. Move the test signal to the CH 2 input after removing the X10 attenuator.

b. Set CH 2 VOLTS/DIV switch to 0.2 V, CH 1 INPUT COUPLING switch to GND, and VERT MODE switch to CH 2.

c. Adjust the Medium-Frequency signal generator for a 2 division display of a 25 megahertz signal.

d. Set both VOLTS/DIV switches to 20 mV and VERT MODE switch to CH 1.

e. CHECK—CRT display for no more than 0.2 division of deflection.

f. Move the CH 2 input test setup to the CH 1 input.

g. Set the CH 1 INPUT COUPLING switch to DC, CH 2 INPUT COUPLING switch to GND, CH 1 VOLTS/DIV switch to 0.2 V.

h. Adjust the Medium-Frequency signal generator for a 2 division display of a 25 megahertz signal.

i. Set VERT MODE switch to CH 2.

j. CHECK—CRT display for no more than 0.2 division of deflection.

k. Disconnect the test setup.

37. Check Common-Mode Rejection Ratio

a. Set both VOLTS/DIV switches to 5 mV, both INPUT COUPLING switches to DC, the VERT MODE switch to CH 1, and push the CH 2 INVERT switch.

b. Connect the output of the Medium-Frequency Constant-Amplitude Signal Generator (Type 191) to the CH 1 and CH 2 inputs via a GR-to-BNC adapter, 42-inch 50 Ω BNC cable, X10 BNC attenuator, 50 Ω BNC termination, and a dual-input coupler.

c. Adjust the Medium-Frequency Signal Generator for a six-division display of the 50-kilohertz reference signal.

d. Set the VERT MODE switch to ADD and adjust the CH 2 Gain adjust for minimum deflection (best CMRR).

e. Without increasing the output signal amplitude, increase the Type 191 output signal frequency to 20 MHz.

f. CHECK—CRT display for no more than 0.6 division of signal amplitude (indicates CMRR of at least 10:1 at 20 MHz).

g. Release the CH 2 INVERT switch and disconnect the test setup.

38. Check Bandwidth Limit Operation

a. Pull the 20 MHz BW/TRIG VIEW button to BW and set the CH 1 INPUT COUPLING switch to DC.

b. Connect the Medium-Frequency Constant-Amplitude Signal Generator (Type 191) to the CH 1 input via a 42-inch 50 Ω BNC cable and a 50 Ω BNC termination.

c. Adjust the Medium-Frequency signal generator for a six-division display of a 50 kilohertz signal.

d. Increase the output frequency of the signal generator until the display is reduced to 4.2 divisions.

e. CHECK—Output frequency of the signal generator is between 16 and 24 megahertz.

f. Disconnect the test setup.

TRIGGER SYSTEM CALIBRATION

Equipment Required

1. Medium-Frequency Constant-Amplitude Signal Generator (Type 191)
2. Low-Frequency Sine-Wave Generator (General Radio 1310-A)
3. Time-Mark Generator (Type 2901)
4. Standard Amplitude Calibrator
5. 50 Ω Signal Pickoff Unit (Type CT-3)
6. X10 Probe
7. 42-Inch 50 Ω BNC Cable
8. GR-to-BNC Female Adapter
9. X10 BNC Attenuator
10. 50 Ω BNC Termination
11. Dual-Input Coupler (two)
12. BNC-T Connector
13. 18-inch 50 Ω BNC Cable (two)
14. X2 BNC Attenuator
15. 50 Ω 5 ns GR Cable

Control Settings

Preset instrument controls to the settings given under Preliminary Control Settings except as follows:

CH 1 VOLTS/DIV	10 mV
both TIME/DIV	0.05 μs
A TRIGGER	
SOURCE	EXT
COUPLING	AC
SLOPE	+

39. Adjust A Trigger Sensitivity

a. Connect the output of the Medium-Frequency Constant-Amplitude Signal Generator (Type 191) to the A and B External Trigger Inputs via a 50 Ω 5 ns GR cable, 50 Ω Signal Pickoff Unit (Type CT-3) thru output, GR-to-BNC adapter, X10 BNC attenuator, a 50 Ω BNC termination, and a dual input coupler.

b. Connect the 10% BNC output connector of the Signal Pickoff Unit (Type CT-3) to the CH 1 and CH 2 inputs via a 50 Ω BNC termination, and a dual input coupler.

c. Adjust the Medium-Frequency signal generator output for a 3-division display of a 25 megahertz signal.

d. Set the CH 1 VOLTS/DIV switch to 0.1 V.

e. CHECK—That a stable display can just be obtained by rotating the A LEVEL control.

f. Adjust the Medium-Frequency signal generator to reduce the CRT display to 0.25 division.

g. ADJUST—A Trigger Sensitivity adjustment, R655, (see Fig. 5-24) so that a stable display can just be obtained by rotating the A LEVEL control.

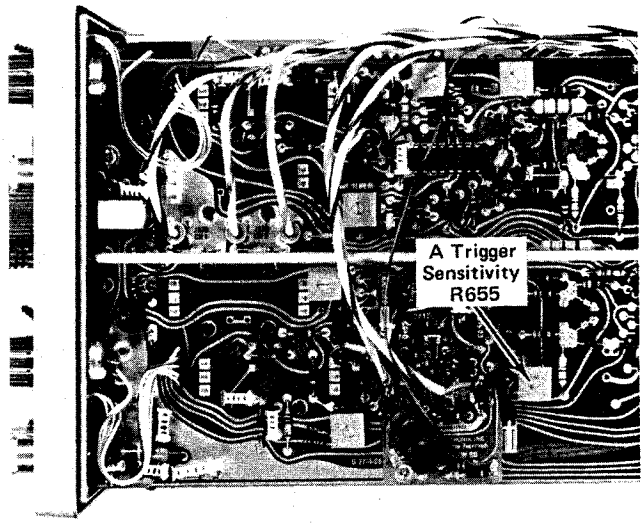

Fig. 5-24. Location of A Trigger Sensitivity adjustment.

40. Adjust B Trigger Sensitivity

a. Set the HORIZ DISPLAY switch to B DLY'D, the B COUPLING switch to AC, the B SOURCE switch to EXT, and the B SLOPE to +.

b. Adjust the Medium-Frequency signal generator for a 0.3 division display.

c. CHECK—That a stable display can just be obtained by rotating the B LEVEL control.

d. Adjust the Medium-Frequency signal generator to reduce the CRT display to 0.25 division.

e. ADJUST—B Trigger Sensitivity adjustment, R555, (see Fig. 5-25) so that a stable display can just be obtained by rotating the B LEVEL control.

41. Adjust B Trigger Slope and Level Centering

a. Set both TIME/DIV switches to 10 μs, both LEVEL controls to 0, and the CH 1 VOLTS/DIV switch to 10 mV.

b. Adjust the Medium-Frequency signal generator for a 0.3 division display of a 50 kilohertz signal.

c. Vertically center the display about the center vertical graticule line.

d. CHECK—CRT display begins at the same vertical point of the signal in both the + and − slope.

e. ADJUST—B Trigger Level Centering adjustment, R535, (see Fig. 5-25) for the trigger point of the display to be at the graticule center, and adjust the B Trigger Slope Centering adjustment, R545, (see Fig. 5-25) so that the trace begins at the graticule center in both the + and − slope.

42. Adjust A Trigger Slope and Level Centering

a. Set the HORIZ DISPLAY switch to A and the A LEVEL control to 0.

b. CHECK—CRT display begins at the same vertical point of the signal in both the + and − slope.

c. ADJUST—A Trigger Level Centering adjustment, R635, (see Fig. 5-26) for the trigger point of the display to be at the graticule center, and adjust the B Trigger Slope Centering adjustment, R645 (see Fig. 5-26) so that the trace begins at the graticule center in both the + and − slope.

43. Adjust A Trigger DC Levels

a. Set the A COUPLING switch to DC, the A SOURCE switch to NORM, and the A LEVEL control to 0.

b. Adjust the Medium-Frequency signal generator for a 0.3 division display.

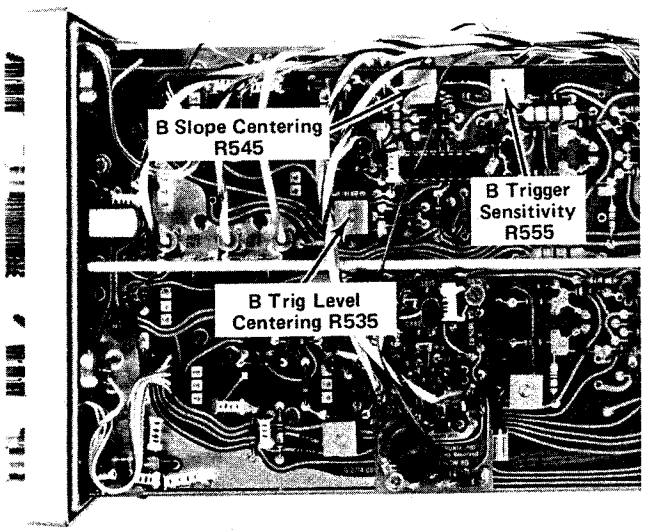

Fig. 5-25. Location of B Trigger Sensitivity, Slope Center, and Level Center adjustments.

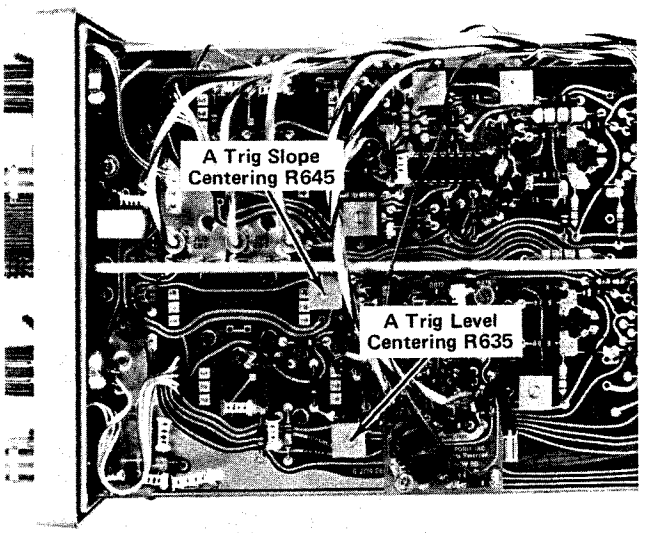

Fig. 5-26. Location of A Trigger Slope Center and Level Center adjustments.

c. Position the display to the vertical center of the graticule viewing area.

d. CHECK—That a stable display can be obtained on both the + and – slopes of the displayed waveform by rotating the A SLOPE control.

e. ADJUST—Normal Trigger DC Balance adjustment, R340, (see Fig. 5-27) to obtain a stable display on both the + and – slopes of the displayed waveform.

f. Set the A SOURCE switch to CH 1.

g. CHECK—For a stable display on both the + and – slopes of the displayed waveform.

h. ADJUST—CH 1 Trigger DC Balance adjustment, R155, (see Fig. 5-27) to obtain a stable display on both the + and – slopes of the displayed waveform.

i. Set the VERT MODE switch to CH 2.

j. Adjust the CH 2 VOLTS/DIV switch to obtain a 0.3 division display.

k. Position the display to the vertical center of the graticule viewing area.

l. Set the A SOURCE switch to CH 2.

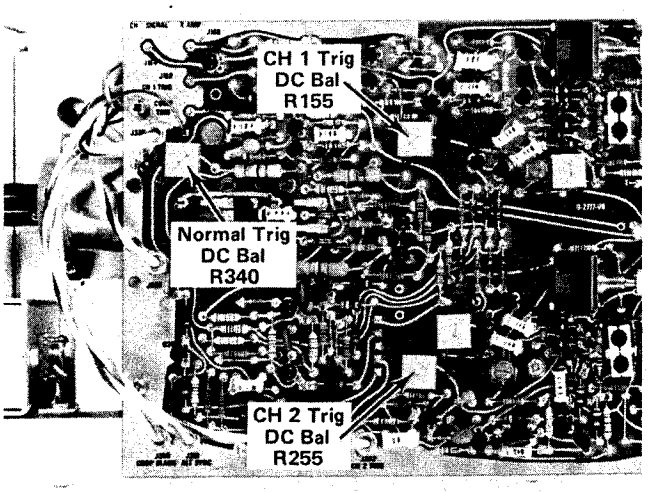

Fig. 5-27. Location of Trigger DC Level adjustments.

m. CHECK—For a stable display on both the + and – slopes of the displayed waveform.

n. ADJUST—CH 2 Trigger DC Balance adjustment, R255, (see Fig. 5-27) to obtain a stable display on both the + and – slopes of the displayed waveform.

44. Check B Trigger DC Levels

a. Set the HORIZ DISPLAY switch to B DLY'D, the B LEVEL control to 0, the B SOURCE switch to NORM, and the B COUPLING switch to DC.

b. CHECK—That a stable display can be obtained on both the + and – slopes of the displayed waveform in the NORM and CH 2 positions of the B SOURCE switch.

c. Set the VERT MODE switch to CH 1.

d. Adjust the CH 1 VOLTS/DIV switch to obtain a 0.3 division display.

e. Position the display to the vertical center of the graticule viewing area.

f. CHECK—That a stable display can be obtained on both the + and – slopes of the displayed waveform in the NORM and CH 1 positions of the B SOURCE switch.

45. Check B Internal 25 Megahertz Triggering

a. Set the DELAY TIME POSITION dial fully counter-clockwise, both TIME/DIV switches to 0.05 μs, both VOLTS/DIV switches to 10 mV, and both SOURCE switches to NORM.

b. Adjust the Medium-Frequency signal generator to maintain a 0.3 division display of a 25 megahertz signal throughout this step.

c. Rotate the B SLOPE switch between + and –.

d. CHECK—A stable display can be obtained on both the + and – slopes of the displayed waveform in the AC, LF REJ, and DC positions of the B COUPLING switch (adjust the B LEVEL control).

e. Set the B SOURCE switch to CH 1.

f. Repeat steps 45-c and 45-d.

g. Set the VERT MODE switch to CH 2.

h. CHECK—That a stable display cannot be obtained with the B SOURCE switch set to CH 1.

i. Repeat steps 45-c and 45-d for NORM and CH 2 positions of the B SOURCE switch.

46. Check A Internal 25 Megahertz Triggering

a. Set the HORIZ DISPLAY switch to A.

b. Adjust the Medium-Frequency signal generator to maintain a 0.3 division display of a 25 megahertz signal throughout this step.

c. Rotate the A SLOPE switch between + and —.

d. CHECK—A stable display can be obtained on both the + and — slopes of the displayed waveform in the AC, LF REJ, and DC positions of the A COUPLING switch (adjust the A LEVEL control).

e. Set the A SOURCE switch to CH 1.

f. Repeat steps 46-c and 46-d.

g. Set the VERT MODE switch to CH 1.

h. CHECK—That a stable display cannot be obtained with the A SOURCE switch set to CH 2.

i. Repeat steps 46-c and 46-d for NORM and CH 1 positions of the A SOURCE switch.

47. Check A External 25 Megahertz Triggering

a. Set the HORIZ DISPLAY switch to A, the A SOURCE switch to EXT, the B SOURCE switch to NORM, and the CH 1 VOLTS/DIV switch to 20 mV.

b. Adjust the Medium-Frequency signal generator for a 5 division display.

c. Add a X2 BNC attenuator to the test setup between the X10 BNC attenuator and the 50 Ω BNC termination.

d. CHECK—That a stable display can be obtained, by adjusting the A LEVEL control, in both the + and — slopes of the displayed waveform in the AC and DC positions of the A COUPLING switch.

e. Remove the X2 BNC attenuator from the External Trigger signal test setup.

f. CHECK—That a stable display can be obtained, by adjusting the A LEVEL control, in both the + and — slopes of the displayed waveform in the LF REJ position of the A COUPLING switch.

g. Replace the X2 BNC attenuator to the test setup and set the A SOURCE switch to EXT ÷ 10.

h. Remove the X10 BNC attenuator from the test setup.

i. CHECK—That a stable display can be obtained, by adjusting the A LEVEL control, in both the + and — slopes of the displayed waveform in the AC and DC positions of the A COUPLING switch.

j. Remove the X2 BNC attenuator from the test setup.

k. CHECK—That a stable display can be obtained, by adjusting the A LEVEL control, in both the + and — slopes of the displayed waveform in the LF REJ position of the A COUPLING switch.

l. Replace both the X10 and X2 BNC attenuators to the test setup.

48. Check B External 25 Megahertz Triggering

a. Set the HORIZ DISPLAY switch to B DLY'D, the B SOURCE switch to EXT, and the A SOURCE switch to NORM.

b. Adjust the Medium-Frequency signal generator for a five division display.

c. CHECK—That a stable display can be obtained, by adjusting the LEVEL controls, in both the + and — slopes of the displayed waveform in the AC and DC positions of the B COUPLING switch.

d. Remove the X2 BNC attenuator from the test setup.

e. CHECK—That a stable display can be obtained, by adjusting the LEVEL controls, in both the + and − slopes of the displayed waveform in the LF REJ position of the B COUPLING switch.

f. Replace the X2 BNC attenuator to the test setup.

49. Check A and B External 100 Megahertz Triggering

a. Set the A TIME/DIV switch to 50 μs, the TRIG MODE to AUTO, the X10 MAG button in, both VOLTS/DIV switches to 50 mV, the VERT MODE switch to CH 1, and the A SOURCE switch to EXT ÷ 10.

b. Adjust the Medium-Frequency signal generator for a three-division display of a 25-megahertz reference signal.

c. Set the A TIME/DIV switch to 0.05 μs.

d. Adjust the signal generator for a 100 megahertz output frequency.

e. CHECK—That a stable display, with no more than 0.1 division of jitter, can be obtained in both the + and − slopes of the displayed waveform, by adjusting the A LEVEL control, in the AC and DC positions of the A COUPLING switch.

f. Remove the X2 BNC attenuator.

g. CHECK—That a stable display, with no more than 0.1 division of jitter, can be obtained in both the + and − slopes of the displayed waveform, by adjusting the A LEVEL control, in the LF REJ position of the A COUPLING switch.

h. Replace the X10 and X2 BNC attenuators to the test setup.

i. Set the A SOURCE switch to EXT.

j. Repeat the 100-megahertz triggering check procedure, steps 49-e through 49-g.

k. Replace the X2 BNC attenuator to the test setup.

l. Set the HORIZ DISPLAY switch to B DLY'D, the B SOURCE switch to EXT, and the A SOURCE switch to NORM.

m. CHECK—That a stable display, with no more than 0.1 division of jitter, can be obtained in both the + and − slopes of the displayed waveform, by adjusting both LEVEL controls, in the AC and DC positions of the B COUPLING switch.

n. Remove the X2 BNC attenuator.

o. CHECK—That a stable display, with no more than 0.1 division of jitter, can be obtained in both the + and − slopes of the displayed waveform, by adjusting both LEVEL controls, in the LF REJ position of the B COUPLING switch.

50. Check B Internal 100 Megahertz Triggering

a. Set the B SOURCE switch to NORM and both VOLTS/DIV switches to 10 mV.

b. Adjust the Medium-Frequency signal generator for a 1.5-division display of 100-megahertz signal.

c. CHECK—That a stable display, with no more than 0.1 division of jitter, can be obtained in both the + and − slopes of the displayed waveform, by adjusting both LEVEL controls, in the AC, LF REJ, and DC positions of the B COUPLING switch.

d. Set the B SOURCE switch to CH 1.

e. Repeat step 50-c.

f. Set the B SOURCE switch to CH 2.

g. CHECK—That a stable display cannot be obtained in any position of the B COUPLING switch.

h. Set the VERT MODE switch to CH 2.

i. Repeat step 50-c.

j. Set the B SOURCE switch to NORM.

k. Repeat step 50-c.

l. Set the B SOURCE switch to CH 1.

m. Repeat step 50-g.

51. Check A Internal 100 Megahertz Triggering

a. Set the HORIZ DISPLAY switch to A.

b. CHECK—That a stable display, with no more than 0.1 division of jitter, can be obtained in both the + and − slopes of the displayed waveform, by adjusting the A LEVEL control, in the AC, LF REJ, and DC positions of the A COUPLING switch.

c. Set the A SOURCE switch to CH 2.

d. Repeat step 51-b.

e. Set the A SOURCE switch to CH 1.

f. CHECK—That a stable display cannot be obtained in any position of the A COUPLING switch.

g. Set the VERT MODE switch to CH 1.

h. Repeat step 51-b.

i. Set the A SOURCE switch to NORM.

j. Repeat step 51-b.

k. Set the A SOURCE switch to CH 2.

l. Repeat step 51-f.

m. Disconnect the test setup.

52. Check A and B HF REJ Triggering

a. Set the HORIZ DISPLAY to A, the TIME/DIV switches to 5 μs, the TRIG MODE switch to AUTO, both COUPLING switches to HF REJ, and both SOURCE switches to NORM.

b. Connect the output of the Medium-Frequency Constant-Amplitude Signal Generator (Type 191) to the CH 1 input via a 50 Ω 5 ns GR cable, a 50 Ω Signal Pickoff Unit (Type CT-3) thru output, a GR-to-BNC adapter, an 18-inch 50 Ω BNC cable, and 50 Ω BNC termination.

c. Connect the 10% output of the Signal Pickoff Unit to the A External Trigger Input via an 18-inch 50 Ω BNC cable and a 50 Ω BNC termination.

d. Adjust the Medium-Frequency signal generator for a 0.5-volt output and adjust the CH 1 VOLTS/DIV switch for a 0.3-division display of a 50-kilohertz signal.

e. CHECK—That a stable display can be obtained in both the + and − slopes of the displayed waveform, in all positions of the A COUPLING switch, by adjusting the A LEVEL control.

f. Increase the output of the Medium-Frequency signal generator to 1 megahertz.

g. CHECK—That a stable display cannot be obtained in the HF REJ position of the A COUPLING switch.

h. Set the A SOURCE switch to EXT.

i. CHECK—That a stable display cannot be obtained in the HF REJ position of the A COUPLING switch.

j. Reduce the Medium-Frequency signal generator output frequency to 50 kilohertz.

k. CHECK—That a stable display can be obtained in both the + and − slopes of the displayed waveform, in all positions of the A COUPLING switch, by adjusting the A LEVEL control.

l. Move the External Trigger signal to the B External Trigger input.

m. CHECK—That a stable display can be obtained in both the + and − slopes of the displayed waveform, in all positions of the B COUPLING switch, by adjusting the LEVEL controls.

n. Increase the output of the Medium-Frequency signal generator to 1 meaghertz.

o. CHECK—That a stable display cannot be obtained in the HF REJ position of the B COUPLING switch.

p. Set the B SOURCE switch to EXT.

q. CHECK—That a stable display cannot be obtained in the HF REJ position of the B COUPLING switch.

r. Reduce the Medium-Frequency signal generator output frequency to 50 kilohertz.

s. CHECK—That a stable display can be obtained in both the + and – slopes of the displayed waveform, in all positions of the B COUPLING switch, by adjusting the LEVEL controls.

t. Disconnect the test setup.

53. Check B 60 Hertz and LF REJ Triggering

a. Set the B TIME/DIV switch to 5 ms, the HORIZ DISPLAY switch to B DLY'D, both SOURCE switches to NORM, and both VOLTS/DIV switches to 0.1 V.

b. Connect the Low-Frequency Sine-Wave Generator (General Radio 1310-A) to the CH 1 input via a 42-inch 50 Ω BNC cable, a BNC-T connector, and an 18-inch 50 Ω BNC cable. Connect the other side of the BNC-T connector to the B External Trigger input via a X10 BNC attenuator and a 50 Ω BNC termination.

c. Adjust the Sine-Wave Generator for a 0.3-division display of a 60-hertz signal.

d. CHECK—That a stable display can be obtained in both the + and – slopes of the displayed waveform, in the AC, HF REJ, and DC positions of the B COUPLING switch, by adjusting the LEVEL controls.

e. CHECK—That a stable display cannot be obtained in the LF REJ position of the B COUPLING switch.

f. Set the B SOURCE switch to CH 1.

g. CHECK—That a stable display can be obtained in both the + and – slopes of the displayed waveform, in the AC, HF REJ, and DC positions of the B COUPLING switch, by adjusting the LEVEL controls.

h. CHECK—That a stable display cannot be obtained in the LF REJ position of the B COUPLING switch.

i. Set the B SOURCE switch to CH 2.

j. CHECK—That a stable display cannot be obtained in any position of the B COUPLING switch.

k. Move the test signal from CH 1 to the CH 2 input.

l. Adjust the Sine-Wave Generator for a 0.3-division display of a 60-hertz signal.

m. CHECK—That a stable display can be obtained in both the + and – slopes of the displayed waveform, in the AC, HF REJ, and DC positions of the B COUPLING switch, by adjusting the LEVEL controls.

n. CHECK—That a stable display cannot be obtained in the LF REJ position of the B COUPLING switch.

o. Set the B SOURCE switch to EXT.

p. CHECK—That a stable display can be obtained in both the + and – slopes of the displayed waveform, in the AC, HF REJ, and DC positions of the B COUPLING switch, by adjusting the LEVEL controls.

q. CHECK—That a stable display cannot be obtained in the LF REJ position of the B COUPLING switch.

54. Check A 60 Hertz and LF REJ Triggering

a. Set the HORIZ DISPLAY switch to A.

b. Move the signal from the B External Trigger input to the A External Trigger input.

c. CHECK—That a stable display can be obtained in both the + and – slopes of the displayed waveform, in the AC, HF REJ, and DC positions of the A COUPLING switch, by adjusting the A LEVEL control.

d. CHECK—That a stable display cannot be obtained in the LF REJ position of the A COUPLING switch.

e. Set the A SOURCE switch to CH 2.

f. CHECK—That a stable display can be obtained in both the + and – slopes of the displayed waveform, in the AC, HF REJ, and DC positions of the A COUPLING switch, by adjusting the A LEVEL control.

g. Set the A SOURCE switch to CH 1.

h. CHECK—That a stable display cannot be obtained in any position of the A COUPLING switch.

i. Move the test signal from CH 2 to the CH 1 input.

j. Adjust the Sine-Wave Generator for a 0.3-division display of a 60-hertz signal.

k. CHECK—That a stable display can be obtained in both the + and − slopes of the displayed waveform, in the AC, HF REJ, and DC positions of the A COUPLING switch, by adjusting the A LEVEL control.

l. CHECK—That a stable display cannot be obtained in the LF REJ position of the A COUPLING switch.

m. Set the A SOURCE switch to EXT.

n. CHECK—That a stable display can be obtained in both the + and − slopes of the displayed waveform, in the AC, HF REJ, and DC positions of the A COUPLING switch, by adjusting the A LEVEL control.

o. CHECK—That a stable display cannot be obtained in the LF REJ position of the A COUPLING switch.

p. Disconnect the test setup.

55. Check A LEVEL Control External Range

a. Set both SOURCE switches to EXT, the CH 1 VOLTS/DIV switch to 1 V, and the A SLOPE switch to +.

b. Connect the output of the Low-Frequency Sine-Wave Generator (General Radio 1310-A) to the CH 1 input and the A External Trigger input through a BNC-T Connector and two 42-inch 50 Ω BNC cables.

c. Adjust the Sine-Wave Generator for a four-division display of a 1-kilohertz signal.

d. CHECK—That the display can be triggered at any point along the positive slope of the waveform when rotating the A LEVEL control throughout its range.

e. CHECK—Display is not triggered at either extreme of rotation.

f. Set the A SLOPE switch to −.

g. CHECK—That the display can be triggered at any point along the negative slope of the waveform when rotating the A LEVEL control throughout its range.

h. CHECK—Display is not triggered at either extreme of rotation.

i. Set the CH 1 VOLTS/DIV switch to 5 V and the A SOURCE switch to EXT ÷ 10.

j. Adjust the Sine-Wave Generator for an eight-division display of a 1-kilohertz signal.

k. CHECK—That the display can be triggered at any point along the negative slope of the waveform when rotating the A LEVEL control throughout its range.

l. CHECK—Display is not triggered at either extreme of rotation.

m. Set the A SLOPE switch to +.

n. CHECK—That the display can be triggered at any point along the positive slope of the waveform when rotating the A LEVEL control throughout its range.

o. CHECK—Display is not triggered at either extreme of rotation.

56. Check B LEVEL Control External Range

a. Set the HORIZ DISPLAY switch to B DLY'D.

b. Move the External Trigger signal to the B External Trigger input.

c. Set the A SOURCE switch to NORM, the B SLOPE switch to +, and the CH 1 VOLTS/DIV switch to 1 V.

d. Adjust the Sine-Wave Generator for a four-division display of a 1-kilohertz signal.

e. CHECK—That the display can be triggered at any point along the positive slope of the waveform when rotating the B LEVEL control throughout its range.

f. CHECK—Display is not triggered at either extreme of rotation.

g. Set the B SLOPE switch to —.

h. CHECK—That the display can be triggered at any point along the negative slope of the waveform when rotating the B LEVEL control throughout its range.

i. CHECK—Display is not triggered at either extreme of rotation.

57. CHECK Single Sweep Operation

a. Set the HORIZ DISPLAY switch to A, and the A COUPLING switch to AC.

b. Adjust the Low-Frequency Sine-Wave Generator for a 50-kilohertz signal output.

c. Adjust the A LEVEL control for a triggered display.

d. Disconnect the test signal from the CH 1 input.

e. Press the SINGL SWP button of the TRIG MODE switch.

f. CHECK—READY light comes on when SINGL SWP button is pressed and remains on until the test signal is re-applied.

g. Reconnect the test signal to the CH 1 input.

h. CHECK—READY light is extinguished.

i. Press the SINGL SWP button.

j. CHECK—That a single-sweep display (one sweep only) is presented.

58. Check A Normal Mode Operation

a. Set the A SOURCE switch to NORM, and the TRIG MODE switch to AUTO.

b. Adjust the Sine-Wave Generator for a 50-kilohertz signal.

c. Adjust the A LEVEL control for a triggered display.

d. Switch the TRIG MODE switch to NORM.

e. CHECK—For a stable display.

f. Remove the test signal from the CH 1 input.

g. CHECK—For no trace in the absence of an adequate trigger signal.

59. Check LINE Triggering

a. Set the HORIZ DISPLAY switch to A, the TRIG MODE switch to AUTO, the A SOURCE switch to LINE, and the A COUPLING switch to AC.

b. Connect a X10 probe from the CH 1 input to a line voltage source.

c. Set the CH 1 VOLTS/DIV switch to display four divisions of deflection.

d. Rotate the A SLOPE switch between + and —.

e. CHECK—Sweep starts on the slope selected by the A SLOPE switch.

f. Disconnect the test setup.

60. Check Automatic Recovery Time

a. Set the A TIME/DIV switch to 50 ms, the A SLOPE switch to +, and the A SOURCE switch to NORM.

b. Connect 50 ms time marks from the Time Mark Generator (Type 2901) to the CH 1 input via a 42-inch 50 Ω BNC cable and a 50 Ω BNC termination.

c. CHECK—That a stable display can be obtained by adjusting the A LEVEL control. Time marker must be at the start of the sweep.

d. Disconnect the test setup.

61. Adjust Trigger View Centering

a. Set the VERT MODE switch to CH 1, CH 1 INPUT COUPLING switch to DC, the CH 1 VOLTS/DIV switch to 10 mV, the A COUPLING switch to DC, the A SOURCE switch to EXT, the A SLOPE switch to +, and the A LEVEL control to 0.

b. Push the TRIG VIEW button and hold it in.

c. CHECK—That the trace is within 1 division of the center horizontal graticule line.

d. ADJUST—Trigger View Centering adjustment, R675, (see Fig. 5-28) so that the trace is at the center horizontal line.

e. Release the TRIG VIEW button.

f. Disconnect the test setup.

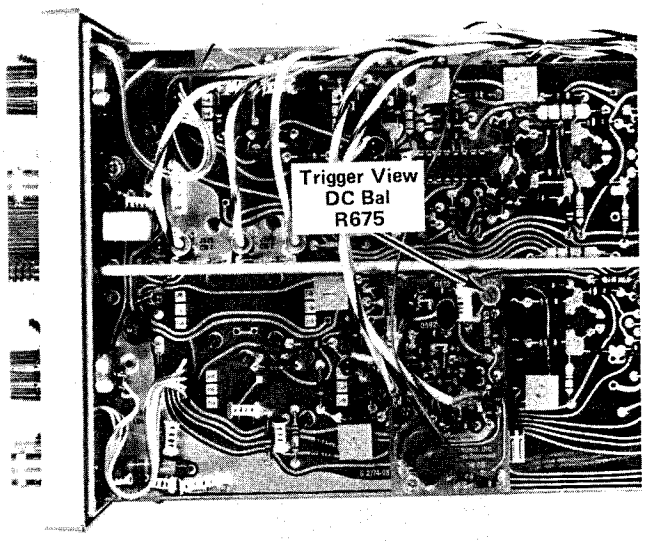

Fig. 5-28. Location of Trigger View Centering adjustment.

62. Check Trigger View Deflection Factor

a. Connect the output of the Standard Amplitude Calibrator to the A External Trigger input via a 42-inch 50 Ω BNC cable.

b. Adjust the Standard Amplitude Calibrator for a 200 mV square-wave output.

c. Push the TRIG VIEW button and hold in.

d. CHECK—For 3.2 to 4.8 divisions of display.

e. Release the TRIG VIEW button.

f. Disconnect the test setup.

Ⓐ

HORIZONTAL SYSTEM CALIBRATION

Equipment Required

1. Medium-Frequency Constant-Amplitude Signal Generator (Type 191).
2. Test Oscilloscope
3. Time Mark Generator
4. Standard Amplitude Calibrator
5. Dual-Input Coupler
6. 42-inch 50 Ω BNC Cable
7. 50 Ω BNC Termination
8. Three-Inch Screwdriver
9. Low-Capacitance Screwdriver

Control Settings

Preset instrument controls to the settings given under Preliminary Control Settings except as follows:

A TIME/DIV	1 ms
B TIME/DIV	5 μs
B TRIGGER SOURCE	STARTS AFTER DELAY
HORIZ DISPLAY	A INTEN
DELAY-TIME POSITION	1.00

63. Adjust Sweep Start and A Sweep Calibration

a. Connect 1 ms time marks to the CH 1 input from the Time Mark Generator via a 42-inch 50 Ω BNC cable and a 50 Ω BNC termination.

b. CHECK—Intensified portion of the sweep begins at the second time marker.

c. ADJUST—Sweep Start adjustment, R1115, (see Fig. 5-29) so the intensified portion of the sweep begins at the start of the second time marker.

d. Set the DELAY TIME POSITION dial to 9.00.

e. CHECK—Intensified portion of the sweep begins at the tenth time marker.

f. ADJUST—A Sweep Calibration adjustment, R1145, (see Fig. 5-29) so the intensified portion of the sweep begins at the start of the tenth time marker.

g. Set the HORIZ DISPLAY switch to B DLY'D.

h. Set the DELAY TIME POSITION dial to 1.00.

i. CHECK—Displayed pulse starts at the beginning of the sweep.

j. ADJUST—Sweep Start adjustment, R1115, so the displayed pulse starts at the beginning of the sweep.

k. Set the DELAY TIME POSITION dial to 9.00.

l. CHECK—Displayed pulse starts at the beginning of the sweep.

m. ADJUST—A Sweep Calibration adjustment, R1145, so the displayed pulse starts at the beginning of the sweep.

n. INTERACTION—Between Sweep Start and A Sweep Cal adjustment. Repeat both for no visible interaction.

64. Check Differential Time Accuracy

a. Set the DELAY TIME POSITION dial to position the tenth time marker to the beginning of the sweep.

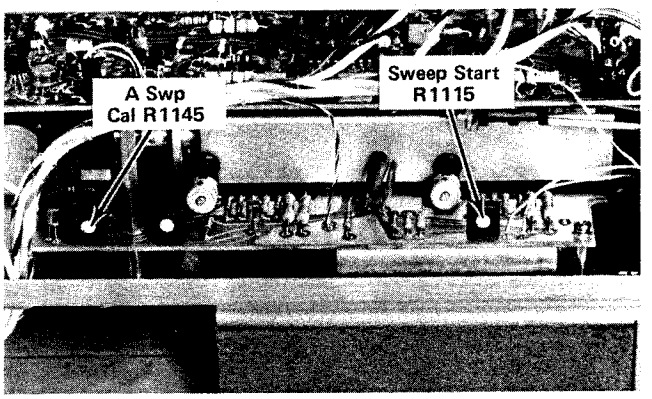

Fig. 5-29. Location of Sweep Start and A Sweep Cal adjustments.

b. Note the reading on the DELAY TIME POSITION dial.

c. Adjust the DELAY TIME POSITION dial so the ninth time marker is at the beginning of the sweep.

d. CHECK—DELAY TIME POSITION dial for a reading one division less, within 0.01 division from +15°C to +35°C; one division less, within 0.03 division from −15°C to +55°C, than the reading noted in step 64-b.

e. Rotate the DELAY TIME POSITION dial to position each successive time marker to the beginning of the sweep.

f. CHECK—DELAY TIME POSITION dial for a reading of one division less, within 0.01 division from +15°C to +35°C; one division less, within 0.03 division from −15°C to +55°C, than the adjacent time marker.

65. Adjust Horizontal Amplifier Gain

a. Set the HORIZ DISPLAY switch to A, both TIME/DIV switches to 1 ms, and the VERT MODE switch to CH 1.

b. Select 1 ms time marks from the Time Mark Generator.

c. ADJUST—X1 Gain adjustment, R1237, (see Fig. 5-30) for exactly one time marker/division.

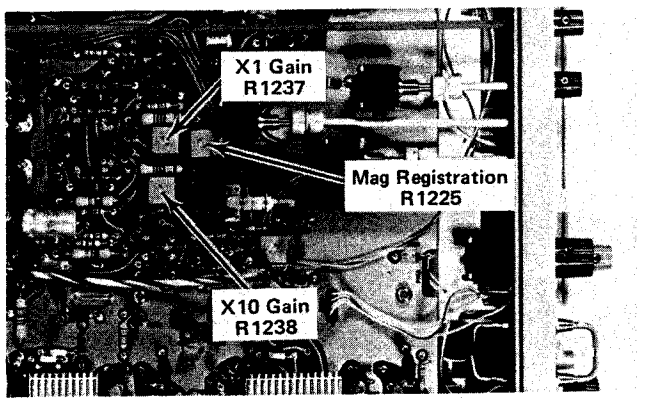

Fig. 5-30. Location of Horizontal Gain and Magnifier Registration adjustments.

d. Select 0.1 ms time marks from the Time Mark Generator.

e. Push the X10 MAG button.

f. CHECK—X10 MAG light is on when the X10 MAG button is in.

g. ADJUST—X10 Gain adjustment, R1238, (see Fig. 5-30) for exactly one time marker/division.

66. Check Sweep Linearity

a. CHECK—Sweep accuracy over any 2 division portion of 10 division sweep to be within 0.1 division.

b. Release the X10 MAG.

c. Select 1 ms time marks from the Time Mark Generator.

d. CHECK—Linearity over any 2 divisions of the sweep to be within 0.1 division of accurate timing.

67. Adjust Magnifier Registration

a. Push the X10 MAG button in.

b. Select 5 ms time markers from the Time Mark Generator.

c. Position the middle time marker to the center vertical graticule line.

d. Release the X10 MAG.

e. CHECK—Middle time marker is within 0.2 division of the center vertical graticule line.

f. ADJUST—Magnifier Registration adjustment, R1225, (see Fig. 5-30) to position the middle time marker to the center vertical graticule line.

g. CAL AID—Repeat the above procedure until no shift occurs between positions of the X10 MAG switch.

68. Adjust B Sweep Calibration

a. Set the DELAY TIME POSITION dial fully counterclockwise; the HORIZ DISPLAY switch to B DLY'D; B TIME/DIV switch to 1 ms; B TRIGGER; COUPLING switch to AC, SOURCE switch to NORM.

b. Select 1 ms time marks from the Time Mark Generator.

c. CHECK—CRT display for 1 time marker/division.

d. ADJUST—B Sweep Calibration adjustment, R1175, (see Fig. 5-31) for 1 time marker/division.

69. Check Sweep Length

a. Set the A TIME/DIV switch to 1 ms, the B TIME/DIV switch to 1 ms, and the HORIZ DISPLAY switch to A.

b. Select 1 ms and 0.1 ms time marks from the Time Mark Generator.

c. CHECK—A sweep length is 11 divisions, within 0.5 division.

70. Check VAR TIME/DIV Range

a. Set the A TIME/DIV switch to 2 ms.

b. Select 5 ms time marks from the Time Mark Generator.

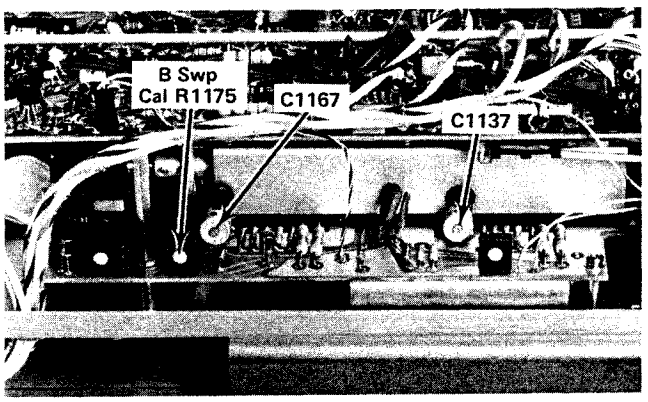

Fig. 5-31. Location of High Speed Timing and B Sweep Cal adjustments.

c. CHECK—At least 1 time marker/division can be obtained by adjusting the VAR TIME/DIV control.

d. CHECK—That the UNCAL light comes on when the VAR TIME/DIV control is out of the detent position.

e. Return the VAR TIME/DIV control to the detent position.

71. Check Horizontal POSITION Control Range

a. Set the horizontal FINE position control to midrange and the A TIME/DIV switch to 2 ms.

b. Turn the horizontal POSITION control fully clockwise.

c. CHECK—Start of sweep is to the right of the center vertical graticule line.

d. Turn the horizontal POSITION control fully counterclockwise.

e. CHECK—End of sweep is to the left of the center vertical graticule line.

f. Rotate the horizontal FINE position control.

g. CHECK—That the FINE position control will position the sweep between one and two divisions.

72. Adjust A TIME/DIV High Speed Timing

a. Set the DELAY TIME POSITION dial to 1.50, the B SOURCE switch to STARTS AFTER DELAY, the A TIME/DIV switch to 0.5 μs, and the B TIME/DIV switch to 0.05 μs.

b. Select 0.5 μs time marks from the Time Mark Generator.

c. CHECK—CRT display for one time marker/division.

d. ADJUST—A High Speed Timing adjustment, C1137, (see Fig. 5-31) with the low-capacitance screwdriver, for one time marker/division.

e. Switch the HORIZ DISPLAY switch to B DLY'D.

f. Set the horizontal POSITION control so the displayed time marker crosses the center vertical graticule line.

g. Set the DELAY TIME POSITION dial to 8.50.

h. CHECK—That the displayed time marker crosses the center vertical graticule line.

i. ADJUST—A High Speed Timing adjustment, C1137, so the displayed time marker crosses the center vertical graticule line.

j. INTERACTION—There is interaction, when adjusting C1137, between the two positions of the DELAY-TIME POSITION dial. Compromise the adjustments as necessary to achieve optimum timing.

73. Adjust B TIME/DIV High Speed Timing

a. Set the DELAY TIME POSITION dial fully counter-clockwise, the HORIZ DISPLAY switch to B DLY'D, B SOURCE switch to NORM, A TIME/DIV switch to 1 μs, and the B TIME/DIV switch to 0.5 μs.

b. Select 0.5 μs time marks from the Time Mark Generator.

c. Adjust the A and B LEVEL controls for a stable display.

d. CHECK—CRT display for one time marker/division.

e. ADJUST—B High Speed Timing adjustment, C1167, (see Fig. 5-31) for one time marker/division.

74. Check A and B TIME/DIV Accuracy

a. CHECK—Using the B TIME/DIV switch and the Time Mark Generator settings given in Table 5-7, check B sweep timing, within 0.2 division, over the first ten divisions of the display.

b. Set the HORIZ DISPLAY to A.

c. CHECK—Using the A TIME/DIV switch and the Time Mark Generator settings given in Table 5-7, check A sweep timing, within 0.2 division, over the first ten divisions of the display.

TABLE 5-7

A and B Timing Accuracy

A and B TIME/DIV Switch Setting	Time-Mark Generator Output	CRT Display (Markers/ Division)
.05 μs	50 nanosecond	1
.1 μs	0.1 microsecond	1
.2 μs	0.1 microsecond	2
.5 μs	0.5 microsecond	1
1 μs	1 microsecond	1
2 μs	1 microsecond	2
5 μs	5 microsecond	1
10 μs	10 microsecond	1
20 μs	10 microsecond	2
50 μs	50 microsecond	1
.1 ms	0.1 millisecond	1
.2 ms	0.1 millisecond	2
.5 ms	0.5 millisecond	1
1 ms	1 millisecond	1
2 ms	1 millisecond	2
5 ms	5 millisecond	1
10 ms	10 millisecond	1
20 ms	10 millisecond	2
50 ms	50 millisecond	1
	A SWEEP ONLY	
.1 s	0.1 second	1
.2 s	0.1 second	2
.5 s	0.5 second	1

75. Adjust High Speed Magnified Timing

a. Set the X10 MAG on, the Horizontal POSITION control to midrange, and the A TIME/DIV switch to 0.05 μs.

b. Select 10 ns sine-wave output from the Time Mark Generator.

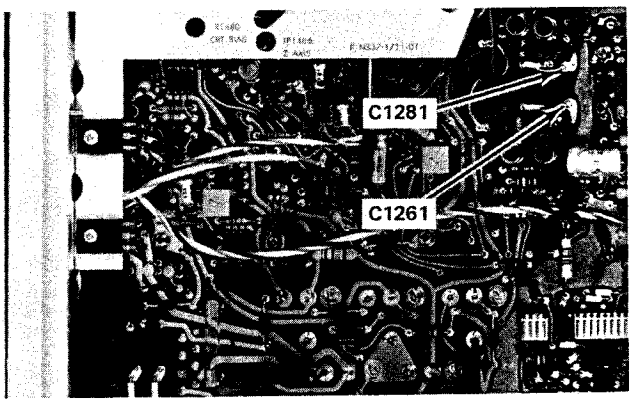

Fig. 5-32. Location of Magnified Timing adjustment.

c. CHECK—CRT display for one cycle/two divisions, within 0.3 division over the full ten horizontal graticule divisions. Disregard the first and last ten divisions of sweep length. See Table 5-8.

d. ADJUST—Magnifier Timing adjustments, C1261 and C1281 (see Fig. 5-32), with the low-capacitance screwdriver for one cycle/two divisions. Disregard the first and last ten divisions of sweep length.

76. Check A and B Magnified Timing Accuracy

a. CHECK—Using the A TIME/DIV switch and the Time Mark Generator settings given in Table 5-8, check A magnified sweep timing, within 0.3 division over the center ten divisions of the magnified display. Note the portions of the total magnified sweep length to be excluded from the measurement.

TABLE 5-8

A and B Magnified Accuracy

A and B TIME/DIV Switch Setting	Time-Mark Generator Output	CRT Display (Markers/Division)	Portions of total magnified sweep length to exclude from measurement
.05 μs	5 nanosecond	1	First and last 10 divisions
.1 μs	10 nanosecond	1	First and last 5 divisions
.2 μs	10 nanosecond	2	First and last 2 1/2 divisions
.5 μs	50 nanosecond	1	
1 μs	0.1 microsecond	1	
2 μs	0.1 microsecond	2	
5 μs	0.5 microsecond	1	
10 μs	1 microsecond	1	
20 μs	1 microsecond	2	
50 μs	5 microsecond	1	
.1 ms	10 microsecond	1	
.2 ms	10 microsecond	2	
.5 ms	50 microsecond	1	
1 ms	0.1 millisecond	1	
2 ms	0.1 millisecond	2	
5 ms	0.5 millisecond	1	
10 ms	1 millisecond	1	
20 ms	1 millisecond	2	
50 ms	5 millisecond	1	
A SWEEP ONLY			
.1 s	10 millisecond	1	
.2 s	10 millisecond	2	
.5 s	50 millisecond	1	

b. Set the HORIZ DISPLAY switch to B DLY'D.

c. CHECK—Using the B TIME/DIV switch and the Time Mark Generator settings given in Table 5-8, check B magnified sweep timing, within 0.3 division over the center ten divisions of the magnified display. Note the portions of the total magnified sweep length to be excluded from the measurement.

d. Release the X10 MAG.

77. Check Delay Time Accuracy

a. Set the B SOURCE switch to STARTS AFTER DELAY, the A TIME/DIV switch to 0.2 μs, and the B TIME/DIV switch to 0.05 μs.

b. CHECK—Using the A TIME/DIV switch, B TIME/DIV switch and the Time Mark Generator settings given in Table 5-9, check delayed sweep accuracy is within the given tolerance. First set the DELAY TIME POSITION dial to 1.00 and rotate the dial until the sweep starts at the top of

TABLE 5-9

Delayed Sweep Accuracy

A TIME/DIV Switch Setting	B TIME/DIV Switch Setting	Time-Mark Generator Output	Allowable Error for Given Accuracy
.2 μs	.05 μs	.1 microsecond	±8 minor dial divisions
.5 μs	.05 μs	.5 microsecond	
1 μs	.1 μs	1 microsecond	
2 μs	.1 μs	1 microsecond	
5 μs	.1 μs	5 microsecond	
10 μs	1 μs	10 microsecond	
20 μs	1 μs	10 microsecond	
50 μs	1 μs	50 microsecond	
.1 ms	10 μs	.1 millisecond	
.2 ms	10 μs	.1 millisecond	
.5 ms	10 μs	.5 millisecond	
1 ms	.1 ms	1 millisecond	
2 ms	.1 ms	1 millisecond	
5 ms	.1 ms	5 millisecond	
10 ms	1 ms	10 millisecond	
20 ms	1 ms	10 millisecond	
50 ms	1 ms	50 millisecond	
.1 s	10 ms	.1 second	
.2 s	10 ms	.1 second	
.5 s	10 ms	.5 second	

the second time marker. Note the control setting and then set the dial to 9.00 and rotate it slightly until the sweep starts at the top of the tenth time marker. DELAY TIME POSITION dial setting must be 8.00 divisions higher, ± 0.08 divisions.

NOTE

Sweep will start at top of the third time marker at 1.00 and at the top of the nineteenth time marker at 9.00 for sweep rates which are multiples of 2 (e.g., 2 µs, 20 µs, 0.2 ms, etc.). If in doubt as to the correct setting of the DELAY TIME POSITION dial, set the HORIZ DISPLAY switch to A INTEN and check which marker is intensified.

78. Check Delay Time Jitter

a. Set the DELAY TIME POSITION dial to 1.00, the HORIZ DISPLAY switch to B DLY'D, the A TIME/DIV switch to 1 ms, and the B TIME/DIV switch to 1 µs.

b. Position the time marker near the center of the display area with the DELAY TIME POSITION dial.

c. CHECK—Jitter on the leading edge of the time marker should not exceed 0.2 division (0.5 division if the instrument is being operated on a 50 Hz line voltage). Disregard the slow drift.

d. Turn the DELAY TIME POSITION dial to 9.00 and adjust it so the time marker is displayed near the center of the display area.

e. CHECK—Jitter on the leading edge of the time marker should not exceed 0.2 divisions (0.5 division if the instrument is being operated on a 50 Hz line voltage). Disregard the slow drift.

79. Check Mixed Sweep Accuracy

a. Set the A TIME/DIV switch to 1 ms, the B TIME/DIV switch to 0.5 ms, the HORIZ DISPLAY switch to A, the B SOURCE switch to STARTS AFTER DELAY, and the DELAY TIME POSITION dial fully clockwise.

b. Select 1 ms time marks from the Time Mark Generator.

c. CHECK—Timing between the second and tenth time markers. Note any timing error for use in step 79-e.

d. Set the HORIZ DISPLAY switch to MIX.

e. CHECK—The timing between second and tenth time markers is within 0.16 division, ± the A sweep error noted in step 79-c.

f. Disconnect the test setup.

80. Adjust X Gain

a. Set the A TIME/DIV switch to X-Y, the VERT MODE switch to CH 2, both VOLTS/DIV switches to 5 mV, and the CH 1 INPUT COUPLING switch to DC.

b. Apply a 20 mV square-wave from the Standard Amplitude Calibrator to the CH 1 or X input through a 42-inch 50 Ω BNC cable.

c. CHECK—CRT display for 4 divisions of deflection, ±4%, between the two displayed dots.

d. ADJUST—X-Gain adjustment R1215 (see Fig. 5-33) for exactly four divisions of deflection between the two dots displayed on the CRT.

e. Disconnect the test setup.

81. Check X-Y Phasing and Bandwidth

a. Set both VOLTS/DIV switches to 5 mV, and both INPUT COUPLING switches to AC.

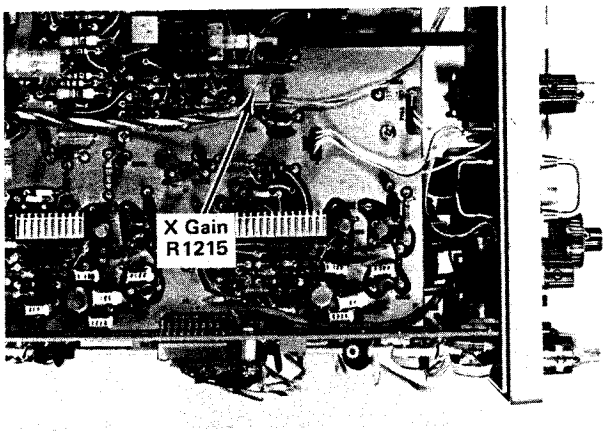

Fig. 5-33. Location of X-Gain adjustment.

b. Connect the output of the Medium-Frequency Constant-Amplitude Signal Generator (Type 191) to the CH 1 and CH 2 inputs through a 42-inch 50 Ω BNC cable, 50 Ω BNC termination, and a dual input coupler.

c. Adjust the Medium-Frequency signal generator for an eight division horizontal display of 50 kilohertz.

d. Center the display vertically and horizontally with the HORIZ and CH 2 POSITION controls.

e. CHECK—CRT display for an opening at the center horizontal line of 0.4 division or less (see Fig. 5-34).

f. Remove the dual input coupler from the test setup.

g. Reconnect the test signal to the CH 1 input.

h. Adjust the signal generator for a 10-division horizontal display of 50 kilohertz.

i. Adjust the signal generator frequency until the display is reduced to seven divisions.

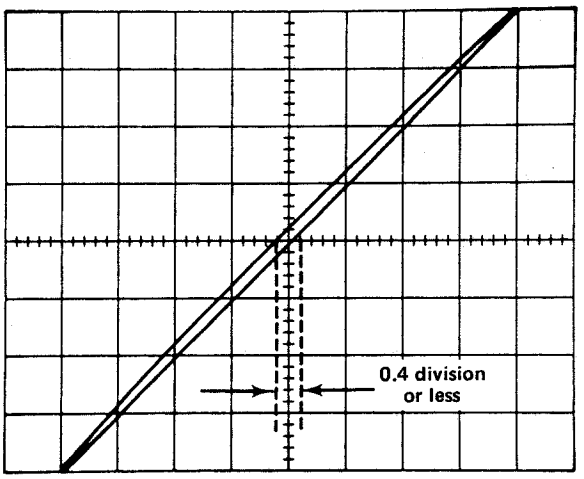

Fig. 5-34. Typical CRT display when checking X-Y phasing.

j. CHECK—Output frequency of the signal generator is at least 4 megahertz.

k. Disconnect the test setup.

82. Check B Ends A Operation

a. Set the HORIZ DISPLAY switch to A INTEN, the A TIME/DIV switch to 1 ms, the B TIME/DIV switch to 0.1 ms, and the A TRIG HOLDOFF control to B ENDS A.

b. Adjust the INTENSITY control so that the A sweep is visible.

c. Rotate the DELAY TIME POSITION dial through its range.

d. CHECK—A sweep ends after the intensified portion at all settings of the DELAY TIME POSITION dial.

83. Check A TRIGGER HOLDOFF

a. Set the HORIZ DISPLAY to A, the A TIME/DIV switch to 50 μs, the A TRIG HOLDOFF control fully counterclockwise, and the A TRIG LEVEL control fully clockwise.

b. Connect the A GATE output signal to the Test Oscilloscope via a 42-inch 50 Ω BNC cable.

c. Set the Test Oscilloscope TIME/DIV switch so that the bottom portion of the waveform (holdoff time of the A GATE) is slightly less than one division in length.

d. Rotate the A TRIG HOLDOFF control clockwise.

e. CHECK—For at least ten times increase in the holdoff time of the A GATE.

f. Set the A TRIG HOLDOFF control fully counterclockwise.

CALIBRATOR, GATES, & EXT Z-AXIS CALIBRATION

Equipment Required

1. Precision DC Voltmeter
2. Test Oscilloscope
3. Standard Amplitude Calibrator
4. 42-Inch 50 Ω BNC Cable
5. BNC-T Connector
6. 15-inch 50 Ω BNC Cable (two)
7. Three-Inch Screwdriver

Control Settings

Preset instrument controls to the settings given under Preliminary Control Settings.

84. Adjust CALIBRATOR Output

a. Connect the Precision DC Voltmeter between the CALIBRATION loop and ground.

b. Install short circuit between the emitter of Q1594 and the collector of Q1590.

c. CHECK—For a meter reading of +0.3 volt ± 0.003 volt.

d. ADJUST—Calibrator Amplitude adjustment, R1597, (see Fig. 5-35) for 0.3 volt, within 1% from 0°C to +40°C; for 0.3 volt, within 1.5% from −15°C to +55°C.

e. Remove the Precision DC Voltmeter connections.

f. Remove the short circuit installed in step b.

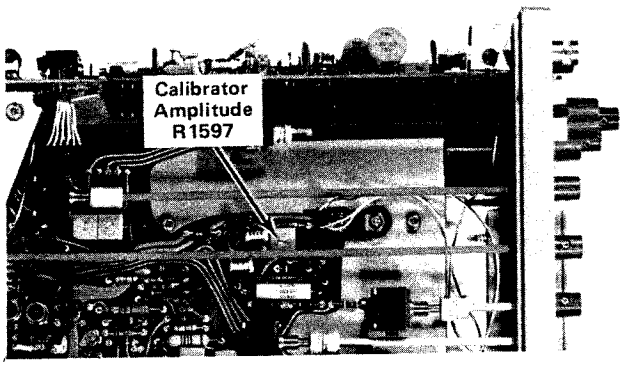

Fig. 5-35. Location of CALIBRATOR Amplitude adjustment.

85. Check A and B + GATES

a. Set the DELAY TIME POSITION dial fully counterclockwise, the HORIZ DISPLAY switch to B DLY'D, the B SOURCE switch to STARTS AFTER DELAY, B TIME/DIV switch to 50 μs, and the TRIG MODE to AUTO.

b. Connect the B + GATE signal to the Test Oscilloscope via a 42-inch 50 Ω BNC cable.

c. CHECK—Test Oscilloscope for a positive-going pulse of +5.5 V in amplitude (within 0.5 V).

d. Remove the B + GATE signal and connect the A + GATE signal to the Test Oscilloscope via a 42-inch 50 Ω BNC cable.

e. CHECK—Test Oscilloscope for a positive-going pulse of +5.5 V in amplitude (within 0.5 V).

f. Disconnect the test setup.

86. Check EXT Z-AXIS Operation

a. Set HORIZ DISPLAY switch to A, A TIME/DIV switch to 0.2 ms, and the A SOURCE switch to EXT.

b. Set the INTENSITY control for a normal level.

c. Connect the Standard Amplitude Calibrator to the A External Trigger Input and the EXT Z-AXIS input via a 42-inch 50 Ω BNC cable, a BNC-T connector, and two 18-inch 50 Ω BNC cables.

d. Adjust the Standard Amplitude Calibrator for a 5 V output.

e. CHECK—CRT display for noticeable intensity modulation.

f. Disconnect the test setup.

REPLACEABLE ELECTRICAL PARTS

PARTS ORDERING INFORMATION

Replacement parts are available from or through your local Tektronix, Inc. Field Office or representative.

Changes to Tektronix instruments are sometimes made to accommodate improved components as they become available, and to give you the benefit of the latest circuit improvements developed in our engineering department. It is therefore important, when ordering parts, to include the following information in your order: Part number, instrument type or number, serial number, and modification number if applicable.

If a part you have ordered has been replaced with a new or improved part, your local Tektronix, Inc. Field Office or representative will contact you concerning any change in part number.

Change information, if any, is located at the rear of this manual.

SPECIAL NOTES AND SYMBOLS

X000	Part first added at this serial number
00X	Part removed after this serial number

ITEM NAME

In the Parts List, an Item Name is separated from the description by a colon (:). Because of space limitations, an Item Name may sometimes appear as incomplete. For further Item Name identification, the U.S. Federal Cataloging Handbook H6-1 can be utilized where possible.

ABBREVIATIONS

ACTR	ACTUATOR	PLSTC	PLASTIC
ASSY	ASSEMBLY	QTZ	QUARTZ
CAP	CAPACITOR	RECP	RECEPTACLE
CER	CERAMIC	RES	RESISTOR
CKT	CIRCUIT	RF	RADIO FREQUENCY
COMP	COMPOSITION	SEL	SELECTED
CONN	CONNECTOR	SEMICOND	SEMICONDUCTOR
ELCTLT	ELECTROLYTIC	SENS	SENSITIVE
ELEC	ELECTRICAL	VAR	VARIABLE
INCAND	INCANDESCENT	WW	WIREWOUND
LED	LIGHT EMITTING DIODE	XFMR	TRANSFORMER
NONWIR	NON WIREWOUND	XTAL	CRYSTAL

For Service Manuals
MAURITRON SERVICES
8 Cherry Tree Road, Chinnor
Oxfordshire, OX9 4QY.
Tel (01844) 351694
Fax (01844) 352554
email:- mauritron@dial.pipex.com

CROSS INDEX MFR. CODE NUMBER TO MANUFACTURER

MFR.CODE	MANUFACTURER	ADDRESS	CITY,STATE,ZIP
00779	AMP, INC.	P. O. BOX 3608	HARRISBURG, PA 17105
00853	SANGAMO ELECTRIC CO., S. CAROLINA DIV.	P. O. BOX 128	PICKENS, SC 29671
01121	ALLEN-BRADLEY CO.	1201 2ND ST. SOUTH	MILWAUKEE, WI 53204
01281	TRW ELECTRONIC COMPONENTS, SEMICONDUCTOR OPERATIONS	14520 AVIATION BLVD.	LAWNDALE, CA 90260
01295	TEXAS INSTRUMENTS, INC., SEMICONDUCTOR GROUP	P. O. BOX 5012	DALLAS, TX 75222
02111	SPECTROL ELECTRONICS CORP.	17070 EAST GALE AVE.	CITY OF INDUSTRY, CA 91745
02735	RCA CORP., SOLID STATE DIVISION	ROUTE 202	SOMERVILLE, NY 08876
03508	GENERAL ELECTRIC CO., SEMI-CONDUCTOR PRODUCTS DEPT.	ELECTRONICS PARK	SYRACUSE, NY 13201
04222	AVX CERAMIC CORP.	P.O. BOX 867	MURTLE BEACH, SC 29577
04713	MOTOROLA, INC., SEMICONDUCTOR PRODUCTS DIV.	5005 E. MCDOWELL RD.	PHOENIX, AZ 85036
07263	FAIRCHILD SEMICONDUCTOR, A DIV. OF FAIRCHILD CAMERA AND INSTRUMENT CORP.	464 ELLIS ST.	MOUNTAIN VIEW, CA 94042
07910	TELEDYNE SEMICONDUCTOR	12515 CHADRON AVE.	HAWTHORNE, CA 90250
08806	GENERAL ELECTRIC CO., MINIATURE LAMP PRODUCTS DEPT.	NELA PK.	CLEVELAND, OH 44112
09353	C AND K COMPONENTS, INC.	103 MORSE STREET	WATERTOWN, MA 02172
12040	NATIONAL SEMICONDUCTOR CORP.	COMMERCE DRIVE	DANBURY, CT 06810
12637	FLEET PRODUCTS CO., INC.	1920 E POMONA ST.	SANTA ANA, CA 92705
12697	CLAROSTAT MFG. CO., INC.	LOWER WASHINGTON ST.	DOVER, NH 03820
12969	UNITRODE CORP.	580 PLEASANT ST.	WATERTOWN, MA 02172
13715	FAIRCHILD SEMICONDUCTOR, A DIV. OF FAIRCHILD CAMERA AND INSTRUMENT CORP.	4300 REDWOOD HWY.	SAN RAFAEL, CA 94903
17856	SILICONIX, INC.	2201 LAURELWOOD RD.	SANTA CLARA, CA 95054
24931	SPECIALTY CONNECTOR CO., INC.	3560 MADISON AVE.	INDIANAPOLIS, IN 46227
25088	SIEMENS CORP.	186 WOOD AVE. S	ISELIN, NJ 08830
28480	HEWLETT-PACKARD CO., CORPORATE HQ.	1501 PAGE MILL RD.	PALO ALTO, CA 94304
32293	INTERSIL, INC.	10900 N. TANTAU AVE.	CUPERTINO, CA 95014
34553	AMPEREX ELECTRONIC CORP., COMPONENT DIV.	35 HOFFMAN AVE.	HAPPAUGE, NY 11787
50157	N. L. INDUSTRIES, INC., ELECTRONICS DEPT.	P. O. BOX 787	MUSKEGON, MI 49443
56289	SPRAGUE ELECTRIC CO.		NORTH ADAMS, MA 01247
63743	WARD LEONARD ELECTRIC CO., INC.	31 SOUTH ST.	MOUNT VERNON, NY 10550
71400	BUSSMAN MFG., DIVISION OF MCGRAW-EDISON CO.	2536 W. UNIVERSITY ST.	ST. LOUIS, MO 63107
72982	ERIE TECHNOLOGICAL PRODUCTS, INC.	644 W. 12TH ST.	ERIE, PA 16512
73138	BECKMAN INSTRUMENTS, INC., HELIPOT DIV.	2500 HARBOR BLVD.	FULLERTON, CA 92634
75042	TRW ELECTRONIC COMPONENTS, IRC FIXED RESISTORS, PHILADELPHIA DIVISION	401 N. BROAD ST.	PHILADELPHIA, PA 19108
76493	BELL INDUSTRIES, INC., MILLER, J. W., DIV.	19070 REYES AVE.	COMPTON, CA 90224
80009	TEKTRONIX, INC.	P. O. BOX 500	BEAVERTON, OR 97077
80031	ELECTRA-MIDLAND CORP., MEPCO DIV., A NORTH AMERICAN PHILLIPS CO.	22 COLUMBIA RD.	MORRISTOWN, NJ 07960
80294	BOURNS, INC., INSTRUMENT DIV.	6135 MAGNOLIA AVE.	RIVERSIDE, CA 92506
80740	BECKMAN INSTRUMENTS, INC.	2500 HARBOR BLVD.	FULLERTON, CA 92634
81483	INTERNATIONAL RECTIFIER CORP.	9220 SUNSET BLVD.	LOS ANGELES, CA 90069
82389	SWITCHCRAFT, INC.	5555 N. ELSTON AVE.	CHICAGO, IL 60630
83003	VARO, INC.	800 W. GARLAND AVE.	GARLAND, TX 75040
90201	MALLORY CAPACITOR CO., DIV. OF P. R. MALLORY CO., INC.	3029 E. WASHINGTON ST.	INDIANAPOLIS, IN 46206
91418	RADIO MATERIALS CO.	4242 W. BRYN MAWR	CHICAGO, IL 60646
91637	DALE ELECTRONICS, INC.	P. O. BOX 609	COLUMBUS, NB 68601
93410	ESSEX INTERNATIONAL, INC., CONTROLS DIV. MANSFIELD PLANT	P. O. BOX 1007	MANSFIELD, OH 44903
94144	RAYTHEON CO., MICROWAVE AND POWER TUBE DIV., INDUSTRIAL COMPONENTS OPERATION	465 CENTRE ST.	QUINCY, MA 02169

Ckt No.	Tektronix Part No.	Serial/Model No. Eff	Dscont	Name & Description	Mfr Code	Mfr Part Number
A1	670-2434-00	B010100	B169999	CKT BOARD ASSY:CH 1 ATTEN	80009	670-2434-00
A1	670-2434-01	B170000		CKT BOARD ASSY:CH 1 ATTEN	80009	670-2434-01
A2	670-2434-00	B010100	B169999	CKT BOARD ASSY:CH 2 ATTEN	80009	670-2434-00
A2	670-2434-01	B170000		CKT BOARD ASSY:CH 2 ATTEN	80009	670-2434-01
A3	670-2237-00			CKT BOARD ASSY:VERT PREAMP	80009	670-2237-00
A4	670-2236-00			CKT BOARD ASSY:VERT MODE	80009	670-2236-00
A5	670-2238-00			CKT BOARD ASSY:VERT OUTPUT (IC)	80009	670-2238-00
A5	670-3023-02			CKT BOARD ASSY:VERT OUTPUT (DESCRETE)	80009	670-3023-02
A6	670-2245-00			CKT BOARD ASSY:FAN MOTOR	80009	670-2245-00
A7	670-2235-00	B010100	B010155	CKT BOARD ASSY:TIMING	80009	670-2235-00
A7	670-2235-01	B010156		CKT BOARD ASSY:TIMING	80009	670-2235-01
A8	670-2234-00	B010100	B119999	CKT BOARD ASSY:TRIG GEN AND SWP LOGIC	80009	670-2234-00
A8	670-2234-02	B120000		CKT BOARD ASSY:TRIG GEN AND SWP LOGIC	80009	670-2234-02
A9	670-2233-00	B010100	B010155	CKT BOARD ASSY:INTERFACE	80009	670-2233-00
A9	670-2233-01	B010156	B079999	CKT BOARD ASSY:INTERFACE	80009	670-2233-01
A9	670-2233-03	B080000		CKT BOARD ASSY:INTERFACE	80009	670-2233-03
A10	670-2279-00			CKT BOARD ASSY:GRATICULE ILLUM	80009	670-2279-00
A11	670-2520-00	B010100	B119999X	CKT BOARD ASSY:TRIG VIEW	80009	670-2520-00
B1690	147-0035-00			MOTOR,DC:BRUSHLESS,10-15VDC,145MA	25088	1AD3001-0A
C1	281-0064-00			CAP.,VAR,PLSTC:0.25-1.5PF,600V	72982	530-002
C2	281-0627-00	B010100	B190452	CAP.,FXD,CER DI:1PF,+/-0.25PF,500V	72982	301-000C0K0109C
C2	281-0661-00	B190453		CAP.,FXD,CER DI:0.8PF,(NOM VALUE),SEL	72982	301-000C0K0808B
C3	285-0816-01			CAP.,FXD,PLSTC:0.19UF,10%,600V	80009	285-0816-01
C6	283-0000-00			CAP.,FXD,CER DI:0.001UF,+100-0%,500V	72982	831-516E102P
C7	283-0000-00			CAP.,FXD,CER DI:0.001UF,+100-0%,500V	72982	831-516E102P
C10, C11 2	307-1014-00	B010100	B019999	ATTENUATOR,FXD:100X	80009	307-1014-00
C10, C11 2	307-1014-01	B020000	B029999	ATTENUATOR,FXD:100X	80009	307-1014-01
C10, C11 2	307-1014-02	B030000	B199599	ATTENUATOR,FXD:100X	80009	307-1014-02
C10, C11	307-1014-02	B199500		ATTENUATOR,FXD:100X	80009	307-1014-02
C12, C13 2	307-1013-00	B010100	B019999	ATTENUATOR,FXD:10X	80009	307-1013-00
C12, C13 2	307-1013-01	B020000	B199499	ATTENUATOR,FXD:10X	80009	307-1013-01
C12, C13	307-1013-01	B199500		ATTENUATOR,FXD:10X	80009	307-1013-01
C16	283-0001-00			CAP.,FXD,CER DI:0.005UF,+100-0%,500V	72982	831-559E502P
C18	281-0593-00	B010100	B069999	CAP.,FXD,CER DI:3.9PF,10%,500V	72982	301-000C0J0399C
C18	281-0626-00	B070000		CAP.,FXD,CER DI:3.3PF,1%,500V	72982	301-000C0J0339B
C21	283-0081-00	B010100	B010349	CAP.,FXD,CER DI:0.1UF,+80-20%,25V	56289	36C600
C21	283-0004-00	B010350		CAP.,FXD,CER DI:0.02UF,+80-20%,150V	72982	855-547E203Z
C22	283-0087-00			CAP.,FXD,CER DI:300PF,5%,1000V	56289	403637
C23	290-0517-00			CAP.,FXD,ELCTLT:6.8UF,20%,35V	56289	196D685X0035KA1
C25	283-0004-00			CAP.,FXD,CER DI:0.02UF,+80-20%,150V	72982	855-547E203Z
C27	281-0184-00	XB010250	B073729	CAP.,VAR,PLSTC:2-18PF,500VDC	34553	2222-809-05003
C27	281-0207-00	B073730		CAP.,VAR,PLSTC:2-18PF,100V	80031	HT10EA/218
C33	281-0178-00	B010100	B069999	CAP.,VAR,PLSTC:1-4PF,500V	34553	2222-809-05001
C33	281-0182-00	B070000	B073729	CAP.,VAR,PLSTC:1.8-10PF,300V	34553	2222-809-05002
C33	281-0206-00	B073730	B179999	CAP.,VAR,PLSTC:2-9PF,100V	80031	HT10EA/29
C33	281-0207-00	B180000		CAP.,VAR,PLSTC:2-18PF,100V	80031	HT10EA/218
C34	283-0139-00			CAP.,FXD,CER DI:150PF,20%,50V	72982	8101A058B
C36	283-0004-00	XB030000		CAP.,FXD,CER DI:0.02UF,+80-20%,150V	72982	855-547E203Z
C37	281-0536-00			CAP.,FXD,CER DI:1000PF,10%,500V	72982	301055X5P102K

Ckt No.	Tektronix Part No.	Serial/Model No. Eff	Dscont	Name & Description	Mfr Code	Mfr Part Number
C38	281-0536-00			CAP.,FXD,CER DI:1000PF,10%,500V	72982	301055X5P102K
C39	283-0004-00			CAP.,FXD,CER DI:0.02UF,+80-20%,150V	72982	855-547E203Z
C42	283-0004-00			CAP.,FXD,CER DI:0.02UF,+80-20%,150V	72982	855-547E203Z
C46	281-0626-00			CAP.,FXD,CER DI:3.3PF,1%,500V	72982	301-000C0J0339B
C47	281-0184-00	B010100	B069999	CAP.,VAR,PLSTC:2-18PF,500VDC	34553	2222-809-05003
C47	281-0182-00	B070000		CAP.,VAR,PLSTC:1.8-10PF,300V	34553	2222-809-05002
C48	281-0184-00	B010100	B069999	CAP.,VAR,PLSTC:2-18PF,500VDC	34553	2222-809-05003
C48	281-0182-00	B070000		CAP.,VAR,PLSTC:1.8-10PF,300V	34553	2222-809-05002
C49	283-0136-00	B010100	B010249	CAP.,FXD,CER DI:10PF,5%,50V	72982	8101-003C0G100J
C49	281-0621-00	B010250		CAP.,FXD,CER DI:12PF,1%,500V	72982	301-000C0G0120F
C51	281-0064-00			CAP.,VAR,PLSTC:0.25-1.5PF,600V	72982	530-002
C52	281-0627-00	B010100	B190452	CAP.,FXD,CER DI:1PF,+/-0.25PF,500V	72982	301-000C0K0109C
C52	281-0661-00	B190453		CAP.,FXD,CER DI:0.8PF,(NOM VALUE),SEL	72982	301-000C0K0808B
C53	285-0816-01			CAP.,FXD,PLSTC:0.19UF,10%,600V	80009	285-0816-01
C56	283-0000-00			CAP.,FXD,CER DI:0.001UF,+100-0%,500V	72982	831-516E102P
C57	283-0000-00			CAP.,FXD,CER DI:0.001UF,+100-0%,500V	72982	831-516E102P
C60	307-1014-02	B199500		ATTENUATOR,FXD:100X	80009	307-1014-02
C61				ATTENUATOR,FXD:100X		
C62	307-1013-01	B199500		ATTENUATOR,FXD:10X	80009	307-1013-01
C63				ATTENUATOR,FXD:10X		
C66	283-0001-00			CAP.,FXD,CER DI:0.005UF,+100-0%,500V	72982	831-559E502P
C68	281-0593-00	B010100	B069999	CAP.,FXD,CER DI:3.9PF,10%,500V	72982	301-000C0J0399C
C68	281-0626-00	B070000		CAP.,FXD,CER DI:3.3PF,1%,500V	72982	301-000C0J0339B
C71	283-0081-00	B010100	B010349	CAP.,FXD,CER DI:0.1UF,+80-20%,25V	56289	36C600
C71	283-0004-00	B010350		CAP.,FXD,CER DI:0.02UF,+80-20%,150V	72982	855-547E203Z
C72	283-0087-00			CAP.,FXD,CER DI:300PF,5%,1000V	56289	403637
C73	290-0517-00			CAP.,FXD,ELCTLT:6.8UF,20%,35V	56289	196D685X0035KA1
C75	283-0004-00			CAP.,FXD,CER DI:0.02UF,+80-20%,150V	72982	855-547E203Z
C77	281-0504-00	B010100	B010249	CAP.,FXD,CER DI:10PF,(NOM VALUE),SEL	72982	301-055C0G0100F
C77	281-0184-00	B010250		CAP.,VAR,PLSTC:2-18PF,500VDC	34553	2222-809-05003
C82	290-0517-00	XB010152		CAP.,FXD,ELCTLT:6.8UF,20%,35V	56289	196D685X0035KA1
C83	281-0184-00	B010100	B069999	CAP.,VAR,PLSTC:2-18PF,500VDC	34553	2222-809-05003
C83	281-0182-00	B070000	B073729	CAP.,VAR,PLSTC:1.8-10PF,300V	34553	2222-809-05002
C83	281-0206-00	B073730	B179999	CAP.,VAR,PLSTC:2-9PF,100V	80031	HT10EA/29
C83	281-0207-00	B180000		CAP.,VAR,PLSTC:2-18PF,100V	80031	HT10EA/218
C84	283-0139-00			CAP.,FXD,CER DI:150PF,20%,50V	72982	8101A058B
C87	281-0536-00			CAP.,FXD,CER DI:1000PF,10%,500V	72982	301055X5P102K
C88	281-0536-00			CAP.,FXD,CER DI:1000PF,10%,500V	72982	301055X5P102K
C92	283-0004-00			CAP.,FXD,CER DI:0.02UF,+80-20%,150V	72982	855-547E203Z
C96	281-0626-00			CAP.,FXD,CER DI:3.3PF,1%,500V	72982	301-000C0J0339B
C97	281-0184-00	B010100	B069999	CAP.,VAR,PLSTC:2-18PF,500VDC	34553	2222-809-05003
C97	281-0182-00	B070000		CAP.,VAR,PLSTC:1.8-10PF,300V	34553	2222-809-05002
C98	281-0184-00	B010100	B069999	CAP.,VAR,PLSTC:2-18PF,500VDC	34553	2222-809-05003
C98	281-0182-00	B070000		CAP.,VAR,PLSTC:1.8-10PF,300V	34553	2222-809-05002
C99	283-0136-00	B010100	B010249	CAP.,FXD,CER DI:10PF,5%,50V	72982	8101-003C0G100J
C99	281-0621-00	B010250		CAP.,FXD,CER DI:12PF,1%,500V	72982	301-000C0G0120F
C101	281-0628-00			CAP.,FXD,CER DI:15PF,5%,600V	72982	301-000C0G0150J
C102	290-0517-00			CAP.,FXD,ELCTLT:6.8UF,20%,35V	56289	196D685X0035KA1
C103	281-0604-00			CAP.,FXD,CER DI:2.2PF,+/-0.25PF,500V	72982	301-000C0J0229C
C105	281-0184-00	B010100	B073729	CAP.,VAR,PLSTC:2-18PF,500VDC	34553	2222-809-05003
C105	281-0207-00	B073730		CAP.,VAR,PLSTC:2-18PF,100V	80031	HT10EA/218
C107	281-0536-00			CAP.,FXD,CER DI:1000PF,10%,500V	72982	301055X5P102K
C109	281-0536-00			CAP.,FXD,CER DI:1000PF,10%,500V	72982	301055X5P102K

Ckt No.	Tektronix Part No.	Serial/Model No. Eff	Dscont	Name & Description	Mfr Code	Mfr Part Number
C122	281-0572-00	XB010250	B010349	CAP.,FXD,CER DI:6.8PF,+/-0.5PF,500V	72982	301-000C0H0689D
C122	281-0184-00	B010350	B073729	CAP.,VAR,PLSTC:2-18PF,500VDC	34553	2222-809-05003
C122	281-0207-00	B073730		CAP.,VAR,PLSTC:2-18PF,100V	80031	HT10EA/218
C124	283-0004-00	XB180000		CAP.,FXD,CER DI:0.02UF,(NOM VALUE),SEL	72982	855-547E203Z
C125	290-0517-00			CAP.,FXD,ELCTLT:6.8UF,20%,35V	56289	196D685X0035KA1
C135	281-0525-00			CAP.,FXD,CER DI:470PF,+/-94PF,500V	04222	7001-1364
C137	281-0525-00			CAP.,FXD,CER DI:470PF,+/-94PF,500V	04222	7001-1364
C142	283-0003-00			CAP.,FXD,CER DI:0.01UF,+80-20%,150V	72982	855-547E103Z
C144	281-0625-00			CAP.,FXD,CER DI:35PF,5%,500V	72982	308-000C0G0350J
C149	281-0184-00	B010100	B073729	CAP.,VAR,PLSTC:2-18PF,500VDC	34553	2222-809-05003
C149	281-0207-00	B073730		CAP.,VAR,PLSTC:2-18PF,100V	80031	HT10EA/218
C151	281-0525-00			CAP.,FXD,CER DI:470PF,+/-94PF,500V	04222	7001-1364
C161	290-0517-00			CAP.,FXD,ELCTLT:6.8UF,20%,35V	56289	196D685X0035KA1
C162	281-0512-00			CAP.,FXD,CER DI:27PF,+/-2.7PF,500V	72982	308-000C0G0270K
C164	290-0517-00			CAP.,FXD,ELCTLT:6.8UF,20%,35V	56289	196D685X0035KA1
C165	283-0004-00	XB110000		CAP.,FXD,CER DI:0.02UF,+80-20%,150V	72982	855-547E203Z
C201	281-0628-00			CAP.,FXD,CER DI:15PF,5%,600V	72982	301-000C0G0150J
C202	283-0004-00			CAP.,FXD,CER DI:0.02UF,+80-20%,150V	72982	855-547E203Z
C203	281-0604-00	XB010250	B069999X	CAP.,FXD,CER DI:2.2PF,+/-0.25PF,500V	72982	301-000C0J0229C
C205	281-0184-00	B010100	B073729	CAP.,VAR,PLSTC:2-18PF,500VDC	34553	2222-809-05003
C205	281-0207-00	B073730		CAP.,VAR,PLSTC:2-18PF,100V	80031	HT10EA/218
C207	281-0536-00			CAP.,FXD,CER DI:1000PF,10%,500V	72982	301055X5P102K
C209	281-0536-00			CAP.,FXD,CER DI:1000PF,10%,500V	72982	301055X5P102K
C225[1]	283-0004-00	B010100	B109999	CAP.,FXD,CER DI:0.02UF,(NOM VALUE),SEL	72982	855-547E203Z
C225	283-0004-00	B110000		CAP.,FXD,CER DI:0.02UF,+80-20%,150V	72982	855-547E203Z
C229	283-0004-00	XB010211	B010349	CAP.,FXD,CER DI:0.02UF,+80-20%,150V	72982	855-547E203Z
C229	290-0517-00	B010350		CAP.,FXD,ELCTLT:6.8UF,20%,35V	56289	196D685X0035KA1
C235	281-0525-00			CAP.,FXD,CER DI:470PF,+/-94PF,500V	04222	7001-1364
C237	281-0525-00			CAP.,FXD,CER DI:470PF,+/-94PF,500V	04222	7001-1364
C242	283-0003-00			CAP.,FXD,CER DI:0.01UF,+80-20%,150V	72982	855-547E103Z
C245	281-0628-00			CAP.,FXD,CER DI:15PF,5%,600V	72982	301-000C0G0150J
C249	281-0184-00	B010100	B073729	CAP.,VAR,PLSTC:2-18PF,500VDC	34553	2222-809-05003
C249	281-0207-00	B073730		CAP.,VAR,PLSTC:2-18PF,100V	80031	HT10EA/218
C251	281-0525-00			CAP.,FXD,CER DI:470PF,+/-94PF,500V	04222	7001-1364
C253	283-0000-00			CAP.,FXD,CER DI:0.001UF,+100-0%,500V	72982	831-516E102P
C261	290-0517-00			CAP.,FXD,ELCTLT:6.8UF,20%,35V	56289	196D685X0035KA1
C262	281-0519-00			CAP.,FXD,CER DI:47PF,+/-4.7PF,500V	72982	308-000C0G0470K
C302	290-0517-00			CAP.,FXD,ELCTLT:6.8UF,20%,35V	56289	196D685X0035KA1
C321	283-0004-00			CAP.,FXD,CER DI:0.02UF,+80-20%,150V	72982	855-547E203Z
C334	283-0004-00			CAP.,FXD,CER DI:0.02UF,+80-20%,150V	72982	855-547E203Z
C338	281-0579-00			CAP.,FXD,CER DI:21PF,5%,500V	72982	301-050C0G0210J
C339	283-0644-00			CAP.,FXD,MICA D:150PF,1%,500V	00853	D151E151F0
C345	283-0004-00	XB010250	B109999X	CAP.,FXD,CER DI:0.02UF,+80-20%,150V	72982	855-547E203Z
C346	290-0517-00			CAP.,FXD,ELCTLT:6.8UF,20%,35V	56289	196D685X0035KA1
C347	281-0508-00	B010100	B179999	CAP.,FXD,CER DI:12PF,+/-0.6PF,500V	72982	301-000C0G0120J
C347	281-0504-00	B180000		CAP.,FXD,CER DI:10PF,+/-1PF,500V	72982	301-055C0G0100F
C349	281-0578-00			CAP.,FXD,CER DI:18PF,5%,500V	72982	301-050C0G0180J
C351	281-0549-00			CAP.,FXD,CER DI:68PF,10%,500V	72982	301-000U2J0680K
C352	290-0517-00			CAP.,FXD,ELCTLT:6.8UF,20%,35V	56289	196D685X0035KA1
C354	290-0517-00	B010100	B109999X	CAP.,FXD,ELCTLT:6.8UF,20%,35V	56289	196D685X0035KA1
C354	283-0004-00	XB198434		CAP.,FXD,CER DI:0.02UF,+80-20%,150V	72982	855-547E203Z
C356	281-0549-00			CAP.,FXD,CER DI:68PF,10%,500V	72982	301-000U2J0680K
C358	290-0517-00			CAP.,FXD,ELCTLT:6.8UF,20%,35V	56289	196D685X0035KA1

[1]Added if necessary.

Ckt No.	Tektronix Part No.	Serial/Model No. Eff	Dscont	Name & Description	Mfr Code	Mfr Part Number
C361	290-0517-00			CAP.,FXD,ELCTLT:6.8UF,20%,35V	56289	196D685X0035KA1
C362	290-0517-00			CAP.,FXD,ELCTLT:6.8UF,20%,35V	56289	196D685X0035KA1
C363	290-0517-00			CAP.,FXD,ELCTLT:6.8UF,20%,35V	56289	196D685X0035KA1
C364	281-0504-00	XB010350		CAP.,FXD,CER DI:10PF,+/-1PF,500V	72982	301-055C0G0100F
C368	283-0058-00			CAP.,FXD,CER DI:0.027UF,10%,100V	72982	8131N147W5R273K
C374	281-0504-00	XB010350		CAP.,FXD,CER DI:10PF,+/-1PF,500V	72982	301-055C0G0100F
C375	283-0004-00	XB010250	B109999X	CAP.,FXD,CER DI:0.02UF,+80-20%,150V	72982	855-547E203Z
C381	283-0000-00			CAP.,FXD,CER DI:0.001UF,+100-0%,500V	72982	831-516E102P
C391	283-0000-00			CAP.,FXD,CER DI:0.001UF,+100-0%,500V	72982	831-516E102P
C403	281-0089-00			CAP.,VAR,CER DI:2-8PF	72982	538-006-89A
C407	283-0081-00			CAP.,FXD,CER DI:0.1UF,+80-20%,25V	56289	36C600
C417	283-0081-00			CAP.,FXD,CER DI:0.1UF,+80-20%,25V	56289	36C600
C423	283-0180-00			CAP.,FXD,CER DI:5600PF,20%,200V	72982	8121N204651562M
C424	283-0167-00	B010100	B010894	CAP.,FXD,CER DI:0.1UF,10%,100V	72982	8131N147W5R104K
C424	283-0198-00	B010895		CAP.,FXD,CER DI:0.22UF,20%,50V	72982	8131N075651224M
C433	283-0119-00			CAP.,FXD,CER DI:2200PF,5%,200V	72982	855-535B222J
C434	283-0187-00	B010100	B029999	CAP.,FXD,CER DI:0.047UF,10%,400V	72982	8131N401X5R473K
C434	283-0341-00	B030000		CAP.,FXD,CER DI:0.047UF,10%,100V	72982	8131N145W5R473K
C441	283-0636-00			CAP.,FXD,MICA D:36PF,1.4%,100V	00853	D155E360G0
C442	281-0089-00			CAP.,VAR,CER DI:2-8PF	72982	538-006-89A
C443	281-0096-00			CAP.,VAR,AIR DI:5.5-18PF	72982	538-006D9-35
C444	281-0602-00			CAP.,FXD,CER DI:68PF,5%,500V	72982	308-000P2G0680J
C445	283-0660-00			CAP.,FXD,MICA D:510PF,2%,500V	00853	D155F511G0
C451	283-0144-00			CAP.,FXD,CER DI:33PF,1%,500V	72982	801-457P2G330F
C453	283-0000-00			CAP.,FXD,CER DI:0.001UF,+100-0%,500V	72982	831-516E102P
C457	283-0010-00			CAP.,FXD,CER DI:0.05UF,+100-20%,50V	56289	273C20
C458	283-0081-00			CAP.,FXD,CER DI:0.1UF,+80-20%,25V	56289	36C600
C459	283-0023-00			CAP.,FXD,CER DI:0.1UF,+80-20%,10V	91418	MX104Z1201R0
C464	283-0178-00			CAP.,FXD,CER DI:0.1UF,+80-20%,100V	72982	8131N145651104Z
C471	283-0178-00			CAP.,FXD,CER DI:0.1UF,+80-20%,100V	72982	8131N145651104Z
C502	281-0579-00			CAP.,FXD,CER DI:21PF,5%,500V	72982	301-050C0G0210J
C503	281-0651-00			CAP.,FXD,CER DI:47PF,5%,200V	72982	374-001T2H0470J
C511	281-0523-00			CAP.,FXD,CER DI:100PF,+/-20PF,500V	72982	301-000U2M0101M
C512	283-0004-00			CAP.,FXD,CER DI:0.02UF,+80-20%,150V	72982	855-547E203Z
C515	281-0511-00			CAP.,FXD,CER DI:22PF,+/-2.2PF,500V	72982	301-000C0G0220K
C522	283-0003-00			CAP.,FXD,CER DI:0.01UF,+80-20%,150V	72982	855-547E103Z
C525	283-0003-00			CAP.,FXD,CER DI:0.01UF,+80-20%,150V	72982	855-547E103Z
C528	281-0511-00			CAP.,FXD,CER DI:22PF,+/-2.2PF,500V	72982	301-000C0G0220K
C531	283-0003-00			CAP.,FXD,CER DI:0.01UF,+80-20%,150V	72982	855-547E103Z
C549	283-0003-00			CAP.,FXD,CER DI:0.01UF,+80-20%,150V	72982	855-547E103Z
C601	283-0003-00	B010100	B010399	CAP.,FXD,CER DI:0.01UF,+80-20%,150V	72982	855-547E103Z
C601	283-0167-00	B010400		CAP.,FXD,CER DI:0.1UF,10%,100V	72982	8131N147W5R104K
C602	281-0611-00	XB120000		CAP.,FXD,CER DI:2.7PF,+/-25PF,200V	72982	374-001C0J0279C
C603	281-0670-00			CAP.,FXD,CER DI:1.8PF,+/-0.1PF,500V	72982	374-005C0K0189B
C604	281-0523-00			CAP.,FXD,CER DI:100PF,+/-20PF,500V	72982	301-000U2M0101M
C606	281-0628-00			CAP.,FXD,CER DI:15PF,5%,600V	72982	301-000C0G0150J
C607	281-0515-00			CAP.,FXD,CER DI:27PF,+/-1.35PF,500V	72982	302-005C0G0270J
C611	281-0523-00			CAP.,FXD,CER DI:100PF,+/-20PF,500V	72982	301-000U2M0101M
C612	283-0004-00			CAP.,FXD,CER DI:0.02UF,+80-20%,150V	72982	855-547E203Z
C615	281-0511-00			CAP.,FXD,CER DI:22PF,+/-2.2PF,500V	72982	301-000C0G0220K
C622	283-0003-00			CAP.,FXD,CER DI:0.01UF,+80-20%,150V	72982	855-547E103Z
C625	283-0003-00			CAP.,FXD,CER DI:0.01UF,+80-20%,150V	72982	855-547E103Z
C628	281-0511-00			CAP.,FXD,CER DI:22PF,+/-2.2PF,500V	72982	301-000C0G0220K

Ckt No.	Tektronix Part No.	Serial/Model No. Eff	Dscont	Name & Description	Mfr Code	Mfr Part Number
C631	283-0003-00			CAP.,FXD,CER DI:0.01UF,+80-20%,150V	72982	855-547E103Z
C649	283-0003-00			CAP.,FXD,CER DI:0.01UF,+80-20%,150V	72982	855-547E103Z
C655	290-0527-00	XB120000		CAP.,FXD,ELCTLT:15UF,20%,20V	90201	TDC156M020NLF
C674	281-0518-00	B010100	B010804X	CAP.,FXD,CER DI:47PF,+/-9.4PF,500V	72982	301-000U2J0470M
C674	281-0501-00	XB011200	B119999X	CAP.,FXD,CER DI:4.7PF,+/-1PF,500V	72982	301-000S2H0479F
C676	281-0646-00	B010100	B010804	CAP.,FXD,CER DI:88PF,5%,500V	72982	308-000T2H0880J
C676	281-0540-00	B010805	B099999	CAP.,FXD,CER DI:51PF,(NOM VALUE),SEL	72982	301-000U2J0510J
C676	281-0549-00	B100000	B119999	CAP.,FXD,CER DI:68PF,(NOM VALUE),SEL	72982	301-000U2J0680K
C676	281-0540-00	B120000		CAP.,FXD,CER DI:51PF,(NOM VALUE),SEL	72982	301-000U2J0510J
C678 [1]				CAP.,FXD,CER DI:33PF,(NOM VALUE),SEL		
C684	281-0626-00	B010100	B010804X	CAP.,FXD,CER DI:3.3PF,1%,500V	72982	301-000C0J0339B
C690	283-0081-00	B010100	B010352	CAP.,FXD,CER DI:0.1UF,+80-20%,25V	56289	36C600
C690	283-0024-00	B010353		CAP.,FXD,CER DI:0.1UF,+80-20%,30V	72982	814N039-E-104Z
C697	283-0081-00	B010100	B010352	CAP.,FXD,CER DI:0.1UF,+80-20%,25V	56289	36C600
C697	283-0023-00	B010353	B119999X	CAP.,FXD,CER DI:0.1UF,+80-20%,10V	91418	MX104Z1201R0
C699	283-0081-00	B010100	B010352	CAP.,FXD,CER DI:0.1UF,+80-20%,25V	56289	36C600
C699	283-0023-00	B010353	B119999X	CAP.,FXD,CER DI:0.1UF,+80-20%,10V	91418	MX104Z1201R0
C805	290-0527-00			CAP.,FXD,ELCTLT:15UF,20%,20V	90201	TDC156M020NLF
C808	281-0577-00			CAP.,FXD,CER DI:14PF,5%,500V	72982	301-050C0G0140J
C824	281-0511-00			CAP.,FXD,CER DI:22PF,+/-2.2PF,500V	72982	301-000C0G0220K
C826	281-0523-00			CAP.,FXD,CER DI:100PF,+/-20PF,500V	72982	301-000U2M0101M
C829	290-0529-00			CAP.,FXD,ELCTLT:47UF,20%,20V	56289	196D476X0020LA3
C834	290-0527-00			CAP.,FXD,ELCTLT:15UF,20%,20V	90201	TDC156M020NLF
C835	290-0527-00			CAP.,FXD,ELCTLT:15UF,20%,20V	90201	TDC156M020NLF
C836	290-0527-00			CAP.,FXD,ELCTLT:15UF,20%,20V	90201	TDC156M020NLF
C837	281-0524-00			CAP.,FXD,CER DI:150PF,+/-30PF,500V	04222	7001-1381
C839	290-0536-00			CAP.,FXD,ELCTLT:10UF,20%,25V	90201	TDC106M025NLF
C853	283-0024-00			CAP.,FXD,CER DI:0.1UF,+80-20%,30V	72982	814N039-E-104Z
C855	290-0527-00			CAP.,FXD,ELCTLT:15UF,20%,20V	90201	TDC156M020NLF
C858	281-0577-00			CAP.,FXD,CER DI:14PF,5%,500V	72982	301-050C0G0140J
C863	281-0523-00	XB120000		CAP.,FXD,CER DI:100PF,+/-20PF,500V	72982	301-000U2M0101M
C874	290-0527-00			CAP.,FXD,ELCTLT:15UF,20%,20V	90201	TDC156M020NLF
C877	281-0508-00			CAP.,FXD,CER DI:12PF,+/-0.6PF,500V	72982	301-000C0G0120J
C879	290-0522-00			CAP.,FXD,ELCTLT:1UF,20%,50V	56289	196D105X0050HA1
C891	290-0527-00			CAP.,FXD,ELCTLT:15UF,20%,20V	90201	TDC156M020NLF
C893	290-0527-00			CAP.,FXD,ELCTLT:15UF,20%,20V	90201	TDC156M020NLF
C896	290-0527-00			CAP.,FXD,ELCTLT:15UF,20%,20V	90201	TDC156M020NLF
C897	290-0527-00			CAP.,FXD,ELCTLT:15UF,20%,20V	90201	TDC156M020NLF
C1000	283-0004-00			CAP.,FXD,CER DI:0.02UF,+80-20%,150V	72982	855-547E203Z
C1002	283-0178-00			CAP.,FXD,CER DI:0.1UF,+80-20%,100V	72982	8131N145651104Z
C1003	281-0637-00			CAP.,FXD,CER DI:91PF,5%,500V	72982	301000Z5D910J
C1005	281-0629-00			CAP.,FXD,CER DI:33PF,5%,600V	72982	308-000C0G0330J
C1017	281-0511-00			CAP.,FXD,CER DI:22PF,+/-2.2PF,500V	72982	301-000C0G0220K
C1021	283-0004-00			CAP.,FXD,CER DI:0.02UF,+80-20%,150V	72982	855-547E203Z
C1024	290-0527-00			CAP.,FXD,ELCTLT:15UF,20%,20V	90201	TDC156M020NLF
C1026	281-0523-00			CAP.,FXD,CER DI:100PF,+/-20PF,500V	72982	301-000U2M0101M
C1031	283-0004-00			CAP.,FXD,CER DI:0.02UF,+80-20%,150V	72982	855-547E203Z
C1036	281-0504-00			CAP.,FXD,CER DI:10PF,+/-1PF,500V	72982	301-055C0G0100F
C1038	290-0527-00			CAP.,FXD,ELCTLT:15UF,20%,20V	90201	TDC156M020NLF
C1039	283-0023-00			CAP.,FXD,CER DI:0.1UF,+80-20%,10V	91418	MX104Z1201R0
C1062	283-0178-00			CAP.,FXD,CER DI:0.1UF,+80-20%,100V	72982	8131N145651104Z
C1063	281-0637-00			CAP.,FXD,CER DI:91PF,5%,500V	72982	301000Z5D910J
C1065	281-0629-00			CAP.,FXD,CER DI:33PF,5%,600V	72982	308-000C0G0330J

[1] Selected and added if necessary.

Ckt No.	Tektronix Part No.	Serial/Model No. Eff	Dscont	Name & Description	Mfr Code	Mfr Part Number
C1077	281-0511-00			CAP.,FXD,CER DI:22PF,+/-2.2PF,500V	72982	301-000C0G0220K
C1081	283-0004-00			CAP.,FXD,CER DI:0.02UF,+80-20%,150V	72982	855-547E203Z
C1084	290-0527-00			CAP.,FXD,ELCTLT:15UF,20%,20V	90201	TDC156M020NLF
C1086	281-0523-00			CAP.,FXD,CER DI:100PF,+/-20PF,500V	72982	301-000U2M0101M
C1091	283-0004-00			CAP.,FXD,CER DI:0.02UF,+80-20%,150V	72982	855-547E203Z
C1096	281-0578-00			CAP.,FXD,CER DI:18PF,5%,500V	72982	301-050C0G0180J
C1099	283-0023-00			CAP.,FXD,CER DI:0.1UF,+80-20%,10V	91418	MX104Z1201R0
C1113	290-0519-00			CAP.,FXD,ELCTLT:100UF,20%,20V	56289	196D107X0020MA3
C1117	283-0080-00			CAP.,FXD,CER DI:0.022UF,+80-20%,25V	56289	19C611
C1131				CAP.,SET MTCHD:10UF		
C1133[1]	295-0160-00			CAP.,SET,MTCHD:0.1UF,	80009	295-0160-00
C1135				CAP.,SET MTCHD:0.001UF		
C1137	281-0089-00			CAP.,VAR,CER DI:2-8PF	72982	538-006-89A
C1138	283-0331-00			CAP.,FXD,CER DI:43PF,2%,100V	72982	805-505A430G
C1151	283-0268-00			CAP.,FXD,CER DI:0.015UF,10%,50V	72982	8131N075W5R153K
C1152	290-0245-00			CAP.,FXD,ELCTLT:1.5UF,10%,10V	56289	150D155X9010A2
C1153	283-0645-00			CAP.,FXD,MICA D:790PF,1%,100V	00853	D151E791F0
C1161				CAP.,SET,MTCHD:1UF		
C1163[1]	295-0157-00			CAP.,SET,MTCHD:0.1UF,	80009	295-0157-00
C1165				CAP.,SET,MTCHD:998PF		
C1167	281-0089-00			CAP.,VAR,CER DI:2-8PF	72982	538-006-89A
C1168	283-0331-00			CAP.,FXD,CER DI:43PF,2%,100V	72982	805-505A430G
C1201	283-0023-00			CAP.,FXD,CER DI:0.1UF,+80-20%,10V	91418	MX104Z1201R0
C1208	283-0004-00			CAP.,FXD,CER DI:0.02UF,+80-20%,150V	72982	855-547E203Z
C1209	283-0004-00			CAP.,FXD,CER DI:0.02UF,+80-20%,150V	72982	855-547E203Z
C1220	290-0650-00			CAP.,FXD,ELCTLT:1000UF,20%,10V	56289	109D108X0010T2
C1235	283-0178-00			CAP.,FXD,CER DI:0.1UF,+80-20%,100V	72982	8131N145651104Z
C1249	283-0004-00			CAP.,FXD,CER DI:0.02UF,+80-20%,150V	72982	855-547E203Z
C1256	283-0024-00			CAP.,FXD,CER DI:0.1UF,+80-20%,30V	72982	814N039-E-104Z
C1261	281-0064-00			CAP.,VAR,PLSTC:0.25-1.5PF,600V	72982	530-002
C1262	283-0092-00			CAP.,FXD,CER DI:0.03UF,+80-20%,200V	72982	845-534E303Z
C1263	283-0003-00			CAP.,FXD,CER DI:0.01UF,+80-20%,150V	72982	855-547E103Z
C1269	283-0003-00			CAP.,FXD,CER DI:0.01UF,+80-20%,150V	72982	855-547E103Z
C1281	281-0064-00			CAP.,VAR,PLSTC:0.25-1.5PF,600V	72982	530-002
C1282	283-0092-00			CAP.,FXD,CER DI:0.03UF,+80-20%,200V	72982	845-534E303Z
C1283	283-0003-00			CAP.,FXD,CER DI:0.01UF,+80-20%,150V	72982	855-547E103Z
C1288	283-0003-00			CAP.,FXD,CER DI:0.01UF,+80-20%,150V	72982	855-547E103Z
C1299	283-0004-00			CAP.,FXD,CER DI:0.02UF,+80-20%,150V	72982	855-547E203Z
C1307	281-0501-00	B010100	B089999	CAP.,FXD,CER DI:4.7PF,+/-1PF,500V	72982	301-000S2H0479F
C1307	281-0500-00	B090000	B119999	CAP.,FXD,CER DI:2.2PF,+/-0.5PF,500V	72982	301-000C0J0229D
C1307	281-0611-00	B120000		CAP.,FXD,CER DI:2.7PF,+/-25PF,200V	72982	374-001C0J0279C
C1327	281-0501-00	B010100	B089999	CAP.,FXD,CER DI:4.7PF,+/-1PF,500V	72982	301-000S2H0479F
C1327	281-0500-00	B090000	B119999	CAP.,FXD,CER DI:2.2PF,+/-0.5PF,500V	72982	301-000C0J0229D
C1327	281-0611-00	B120000		CAP.,FXD,CER DI:2.7PF,+/-25PF,200V	72982	374-001C0J0279C
C1339	283-0023-00	B010100	B109999	CAP.,FXD,CER DI:0.1UF,+80-20%,10V	91418	MX104Z1201R0
C1339	283-0081-00	B110000		CAP.,FXD,CER DI:0.1UF,+80-20%,25V	56289	36C600
C1348	283-0023-00			CAP.,FXD,CER DI:0.1UF,+80-20%,10V	91418	MX104Z1201R0
C1349	283-0023-00			CAP.,FXD,CER DI:0.1UF,+80-20%,10V	91418	MX104Z1201R0
C1403	283-0198-00			CAP.,FXD,CER DI:0.22UF,20%,50V	72982	8131N075651224M
C1404	290-0159-00	B010100	B199819	CAP.,FXD,ELCTLT:2UF,+50-10%,150V	56289	30D205F150BB4
C1404	290-0149-00	B199820		CAP.,FXD,ELCTLT:5UF,+75-10%,150V	56289	30D505G150DD4
C1412	290-0536-00			CAP.,FXD,ELCTLT:10UF,20%,25V	90201	TDC106M025NLF
C1416	283-0203-00			CAP.,FXD,CER DI:0.47UF,20%,50V	72982	8131N075651474M

[1]Individual timing capacitors in this assembly must be ordered by the 9-digit part number, letter suffix and tolerance printed on the timing capacitor to be replaced. The letter suffix and the tolerance should be the same for all of the timing capacitors in the assembly.
EXAMPLE: 285-XXXX-XX F-

Ckt No.	Tektronix Part No.	Serial/Model No. Eff	Dscont	Name & Description	Mfr Code	Mfr Part Number
C1419	290-0560-00			CAP.,FXD,ELCTLT:47UF,20%,25V	56289	196D476X0025MA3
C1420	281-0622-00			CAP.,FXD,CER DI:47PF,1%,500V	72982	308-000C0G0470F
C1421	283-0071-00			CAP.,FXD,CER DI:0.0068UF,+80-30%,5000V	56289	45C10A1
C1422	283-0071-00			CAP.,FXD,CER DI:0.0068UF,+80-30%,5000V	56289	45C10A1
C1423	283-0071-00			CAP.,FXD,CER DI:0.0068UF,+80-30%,5000V	56289	45C10A1
C1424	285-1040-00			CAP.,FXD,PLSTC:0.0012UF,10%,4000V	56289	430P522
C1427	283-0002-00	XB080000		CAP.,FXD,CER DI:0.01UF,+80-20%,500V	72982	811-546E103Z
C1430	285-1040-00			CAP.,FXD,PLSTC:0.0012UF,10%,4000V	56289	430P522
C1434	283-0005-00	B010100	B079999X	CAP.,FXD,CER DI:0.01UF,+100-0%,250V	72982	8131-250651103P
C1442	283-0003-00			CAP.,FXD,CER DI:0.01UF,+80-20%,150V	72982	855-547E103Z
C1445	283-0003-00			CAP.,FXD,CER DI:0.01UF,+80-20%,150V	72982	855-547E103Z
C1447	283-0003-00			CAP.,FXD,CER DI:0.01UF,+80-20%,150V	72982	855-547E103Z
C1449	283-0003-00			CAP.,FXD,CER DI:0.01UF,+80-20%,150V	72982	855-547E103Z
C1452	281-0580-00			CAP.,FXD,CER DI:470PF,10%,500V	04222	7001-1374
C1469	281-0661-00	B010100	B089999X	CAP.,FXD,CER DI:0.8PF,+/-0.1PF,500V	72982	301-000C0K0808B
C1471	281-0064-00			CAP.,VAR,PLSTC:0.25-1.5PF,600V	72982	530-002
C1474	283-0111-00			CAP.,FXD,CER DI:0.1UF,20%,50V	72982	8131N075651104M
C1475	283-0000-00			CAP.,FXD,CER DI:0.001UF,+100-0%,500V	72982	831-516E102P
C1476	283-0057-00			CAP.,FXD,CER DI:0.1UF,+80-20%,200V	56289	274C10
C1477	283-0057-00	XB130000		CAP.,FXD,CER DI:0.1UF,+80-20%,200V	56289	274C10
C1481	290-0164-00			CAP.,FXD,ELCTLT:1UF,+50-10%,150V	56289	30D105F150BA2
C1484	283-0178-00			CAP.,FXD,CER DI:0.1UF,+80-20%,100V	72982	8131N145651104Z
C1487	283-0101-00			CAP.,FXD,CER DI:4700PF,+80-20%,6000V	56289	45C11A
C1488	285-1040-00			CAP.,FXD,PLSTC:0.0012UF,10%,4000V	56289	430P522
C1510	283-0057-00	B010100	B010399	CAP.,FXD,CER DI:0.1UF,+80-20%,200V	56289	274C10
C1510	283-0167-00	B010400		CAP.,FXD,CER DI:0.1UF,10%,100V	72982	8131N147W5R104K
C1511	281-0536-00	B010300	B010399	CAP.,FXD,CER DI:1000PF,10%,500V	72982	301055X5P102K
C1511	281-0580-00	B010400		CAP.,FXD,CER DI:470PF,10%,500V	04222	7001-1374
C1512	290-0639-00	B010100	B079999	CAP.,FXD,ELCTLT:300UF,+75-10%,80V	56289	68D10528
C1512	290-0670-00	B080000		CAP.,FXD,ELCTLT:550UF,+75-10%,100V	56289	68D10512
C1513	290-0638-00			CAP.,FXD,ELCTLT:1200UF,+75-10%,100V	56289	68D10529
C1522	283-0004-00			CAP.,FXD,CER DI:0.02UF,+80-20%,150V	72982	855-547E203Z
C1525	283-0178-00	XB011052		CAP.,FXD,CER DI:0.1UF,+80-20%,100V	72982	8131N145651104Z
C1534	290-0305-00			CAP.,FXD,ELCTLT:3UF,20%,150V	56289	109D305X0150C2
C1537	281-0550-00			CAP.,FXD,CER DI:120PF,10%,500V	04222	7001-1373
C1542	290-0584-00			CAP.,FXD,ELCTLT:5500UF,+100-10%,30V	90201	20-36094
C1549	290-0536-00	B010100	B079999	CAP.,FXD,ELCTLT:10UF,20%,25V	90201	TDC106M025NLF
C1549	290-0529-00	B080000		CAP.,FXD,ELCTLT:47UF,20%,20V	56289	196D476X0020LA3
C1552	290-0571-00			CAP.,FXD,ELCTLT:5000UF,+100-0%,25V	90201	20-36043
C1559	290-0535-00			CAP.,FXD,ELCTLT:33UF,20%,10V	56289	196D336X0010KA1
C1562	290-0583-00			CAP.,FXD,ELCTLT:3000UF,+100-10%,35V	56289	68D10490
C1569	290-0535-00			CAP.,FXD,ELCTLT:33UF,20%,10V	56289	196D336X0010KA1
C1587	290-0523-00			CAP.,FXD,ELCTLT:2.2UF,20%,20V	56289	196D225X0025HA1
C1592	285-0686-00			CAP.,FXD,PLSTC:0.068UF,10%,100V	56289	410P108
C1593	281-0551-00			CAP.,FXD,CER DI:390PF,10%,500V	04222	7001-1363
C1596	290-0532-00			CAP.,FXD,ELCTLT:150UF,20%,6V	90201	TDC157M006CL
C1597	281-0513-00			CAP.,FXD,CER DI:27PF,+/-5.4PF,500V	72982	301-000P2G0270M
C1698	290-0536-00			CAP.,FXD,ELCTLT:10UF,20%,25V	90201	TDC106M025NLF
CR18	152-0323-00			SEMICOND DEVICE:SILICON,35V,100MA	03508	SE365
CR31	152-0141-02	B010100	B069999	SEMICOND DEVICE:SILICON,30V,150MA	07910	1N4152
CR31	152-0153-00	B070000		SEMICOND DEVICE:SILICON,15V,50MA	13715	FD7003
CR32	152-0141-02	B010100	B069999	SEMICOND DEVICE:SILICON,30V,150MA	07910	1N4152
CR32	152-0153-00	B070000		SEMICOND DEVICE:SILICON,15V,50MA	13715	FD7003

Ckt No.	Tektronix Part No.	Serial/Model No. Eff	Dscont	Name & Description	Mfr Code	Mfr Part Number
CR34	152-0271-00			SEMICOND DEVICE:SILICON,10PF	01281	V10E
CR39	152-0460-00			SEMICOND DEVICE:100V,1MA	04713	1N5299
CR68	152-0323-00			SEMICOND DEVICE:SILICON,35V,100MA	03508	SE365
CR81	152-0141-02	B010100	B069999	SEMICOND DEVICE:SILICON,30V,150MA	07910	1N4152
CR81	152-0153-00	B070000		SEMICOND DEVICE:SILICON,15V,50MA	13715	FD7003
CR82	152-0141-02	B010100	B069999	SEMICOND DEVICE:SILICON,30V,150MA	07910	1N4152
CR82	152-0153-00	B070000		SEMICOND DEVICE:SILICON,15V,50MA	13715	FD7003
CR84	152-0271-00			SEMICOND DEVICE:SILICON,10PF	01281	V10E
CR152	152-0141-02			SEMICOND DEVICE:SILICON,30V,150MA	07910	1N4152
CR164	152-0141-02			SEMICOND DEVICE:SILICON,30V,150MA	07910	1N4152
CR165	152-0141-02			SEMICOND DEVICE:SILICON,30V,150MA	07910	1N4152
CR166	152-0141-02			SEMICOND DEVICE:SILICON,30V,150MA	07910	1N4152
CR167	152-0141-02			SEMICOND DEVICE:SILICON,30V,150MA	07910	1N4152
CR252	152-0141-02			SEMICOND DEVICE:SILICON,30V,150MA	07910	1N4152
CR304	152-0153-00			SEMICOND DEVICE:SILICON,15V,50MA	13715	FD7003
CR305	152-0153-00			SEMICOND DEVICE:SILICON,15V,50MA	13715	FD7003
CR307	152-0153-00			SEMICOND DEVICE:SILICON,15V,50MA	13715	FD7003
CR308	152-0153-00			SEMICOND DEVICE:SILICON,15V,50MA	13715	FD7003
CR314	152-0153-00			SEMICOND DEVICE:SILICON,15V,50MA	13715	FD7003
CR315	152-0153-00			SEMICOND DEVICE:SILICON,15V,50MA	13715	FD7003
CR317	152-0153-00			SEMICOND DEVICE:SILICON,15V,50MA	13715	FD7003
CR318	152-0153-00			SEMICOND DEVICE:SILICON,15V,50MA	13715	FD7003
CR342	152-0141-02			SEMICOND DEVICE:SILICON,30V,150MA	07910	1N4152
CR362	152-0141-02			SEMICOND DEVICE:SILICON,30V,150MA	07910	1N4152
CR368	152-0141-02			SEMICOND DEVICE:SILICON,30V,150MA	07910	1N4152
CR372	152-0141-02			SEMICOND DEVICE:SILICON,30V,150MA	07910	1N4152
CR378	152-0141-02			SEMICOND DEVICE:SILICON,30V,150MA	07910	1N4152
CR421	152-0269-00			SEMICOND DEVICE:SILICON,VAR VCAP.,4V,33PF	80009	152-0269-00
CR422	152-0269-00			SEMICOND DEVICE:SILICON,VAR VCAP.,4V,33PF	80009	152-0269-00
CR517	152-0246-00			SEMICOND DEVICE:SILICON,400PIV,200MA	07910	CD12676
CR550	152-0125-00			SEMICOND DEVICE:TUNNEL,15PF,4.7MA	80009	152-0125-00
CR552	152-0125-00			SEMICOND DEVICE:TUNNEL,15PF,4.7MA	80009	152-0125-00
CR553	152-0141-02			SEMICOND DEVICE:SILICON,30V,150MA	07910	1N4152
CR554	152-0141-02			SEMICOND DEVICE:SILICON,30V,150MA	07910	1N4152
CR617	152-0246-00			SEMICOND DEVICE:SILICON,400PIV,200MA	07910	CD12676
CR650	152-0125-00			SEMICOND DEVICE:TUNNEL,15PF,4.7MA	80009	152-0125-00
CR652	152-0125-00			SEMICOND DEVICE:TUNNEL,15PF,4.7MA	80009	152-0125-00
CR801	152-0322-00			SEMICOND DEVICE:SILICON,15V	28480	5082-2672
CR809	152-0141-02			SEMICOND DEVICE:SILICON,30V,150MA	07910	1N4152
CR818	152-0141-02			SEMICOND DEVICE:SILICON,30V,150MA	07910	1N4152
CR822	152-0141-02			SEMICOND DEVICE:SILICON,30V,150MA	07910	1N4152
CR825	152-0141-02			SEMICOND DEVICE:SILICON,30V,150MA	07910	1N4152
CR826	152-0141-02			SEMICOND DEVICE:SILICON,30V,150MA	07910	1N4152
CR831	152-0141-02			SEMICOND DEVICE:SILICON,30V,150MA	07910	1N4152
CR832	152-0141-02			SEMICOND DEVICE:SILICON,30V,150MA	07910	1N4152
CR838	152-0141-02			SEMICOND DEVICE:SILICON,30V,150MA	07910	1N4152
CR851	152-0322-00			SEMICOND DEVICE:SILICON,15V	28480	5082-2672
CR859	152-0141-02			SEMICOND DEVICE:SILICON,30V,150MA	07910	1N4152
CR862	152-0141-02	XB120000		SEMICOND DEVICE:SILICON,30V,150MA	07910	1N4152
CR863	152-0141-02	XB010600		SEMICOND DEVICE:SILICON,30V,150MA	07910	1N4152
CR877	152-0141-02			SEMICOND DEVICE:SILICON,30V,150MA	07910	1N4152
CR1001	152-0141-02			SEMICOND DEVICE:SILICON,30V,150MA	07910	1N4152
CR1004	152-0141-02			SEMICOND DEVICE:SILICON,30V,150MA	07910	1N4152

Ckt No.	Tektronix Part No.	Serial/Model No. Eff	Dscont	Name & Description	Mfr Code	Mfr Part Number
CR1011	152-0141-02			SEMICOND DEVICE:SILICON,30V,150MA	07910	1N4152
CR1024	152-0141-02			SEMICOND DEVICE:SILICON,30V,150MA	07910	1N4152
CR1035	152-0141-02			SEMICOND DEVICE:SILICON,30V,150MA	07910	1N4152
CR1042	152-0141-02			SEMICOND DEVICE:SILICON,30V,150MA	07910	1N4152
CR1043	152-0141-02			SEMICOND DEVICE:SILICON,30V,150MA	07910	1N4152
CR1061	152-0141-02			SEMICOND DEVICE:SILICON,30V,150MA	07910	1N4152
CR1064	152-0141-02			SEMICOND DEVICE:SILICON,30V,150MA	07910	1N4152
CR1071	152-0141-02			SEMICOND DEVICE:SILICON,30V,150MA	07910	1N4152
CR1095	152-0141-02			SEMICOND DEVICE:SILICON,30V,150MA	07910	1N4152
CR1101	152-0141-02			SEMICOND DEVICE:SILICON,30V,150MA	07910	1N4152
CR1102	152-0141-02			SEMICOND DEVICE:SILICON,30V,150MA	07910	1N4152
CR1155	152-0333-00			SEMICOND DEVICE:SILICON,55V,200MA	80009	152-0333-00
CR1201	152-0141-02			SEMICOND DEVICE:SILICON,30V,150MA	07910	1N4152
CR1202	152-0141-02			SEMICOND DEVICE:SILICON,30V,150MA	07910	1N4152
CR1216	152-0141-02	B010100	B079999X	SEMICOND DEVICE:SILICON,30V,150MA	07910	1N4152
CR1218	152-0141-02	XB080000		SEMICOND DEVICE:SILICON,30V,150MA	07910	1N4152
CR1248	152-0141-02			SEMICOND DEVICE:SILICON,30V,150MA	07910	1N4152
CR1251	152-0153-00			SEMICOND DEVICE:SILICON,15V,50MA	13715	FD7003
CR1252	152-0153-00			SEMICOND DEVICE:SILICON,15V,50MA	13715	FD7003
CR1253	152-0322-00			SEMICOND DEVICE:SILICON,15V	28480	5082-2672
CR1255	152-0141-02			SEMICOND DEVICE:SILICON,30V,150MA	07910	1N4152
CR1273	152-0322-00			SEMICOND DEVICE:SILICON,15V	28480	5082-2672
CR1275	152-0141-02			SEMICOND DEVICE:SILICON,30V,150MA	07910	1N4152
CR1286	152-0141-02			SEMICOND DEVICE:SILICON,30V,150MA	07910	1N4152
CR1304	152-0141-02			SEMICOND DEVICE:SILICON,30V,150MA	07910	1N4152
CR1306	152-0141-02			SEMICOND DEVICE:SILICON,30V,150MA	07910	1N4152
CR1309	152-0141-02			SEMICOND DEVICE:SILICON,30V,150MA	07910	1N4152
CR1315	152-0141-02			SEMICOND DEVICE:SILICON,30V,150MA	07910	1N4152
CR1316	152-0141-02			SEMICOND DEVICE:SILICON,30V,150MA	07910	1N4152
CR1325	152-0141-02			SEMICOND DEVICE:SILICON,30V,150MA	07910	1N4152
CR1326	152-0141-02			SEMICOND DEVICE:SILICON,30V,150MA	07910	1N4152
CR1327	152-0141-02	B010100	B119999X	SEMICOND DEVICE:SILICON,30V,150MA	07910	1N4152
CR1334	152-0141-02			SEMICOND DEVICE:SILICON,30V,150MA	07910	1N4152
CR1335	152-0141-02			SEMICOND DEVICE:SILICON,30V,150MA	07910	1N4152
CR1336	152-0141-02			SEMICOND DEVICE:SILICON,30V,150MA	07910	1N4152
CR1341	152-0141-02	B010100	B119999X	SEMICOND DEVICE:SILICON,30V,150MA	07910	1N4152
CR1342	152-0141-02			SEMICOND DEVICE:SILICON,30V,150MA	07910	1N4152
CR1344	152-0141-02			SEMICOND DEVICE:SILICON,30V,150MA	07910	1N4152
CR1345	152-0141-02			SEMICOND DEVICE:SILICON,30V,150MA	07910	1N4152
CR1347	152-0141-02			SEMICOND DEVICE:SILICON,30V,150MA	07910	1N4152
CR1404	152-0333-00			SEMICOND DEVICE:SILICON,55V,200MA	80009	152-0333-00
CR1408	152-0141-02			SEMICOND DEVICE:SILICON,30V,150MA	07910	1N4152
CR1412	152-0141-02			SEMICOND DEVICE:SILICON,30V,150MA	07910	1N4152
CR1413	152-0141-02			SEMICOND DEVICE:SILICON,30V,150MA	07910	1N4152
CR1414	152-0141-02			SEMICOND DEVICE:SILICON,30V,150MA	07910	1N4152
CR1416	152-0333-00			SEMICOND DEVICE:SILICON,55V,200MA	80009	152-0333-00
CR1421	152-0409-00			SEMICOND DEVICE:SILICON,12,000V,5MA	83003	VG-12X
CR1427	152-0107-00	XB080000		SEMICOND DEVICE:SILICON,375V,400MA	80009	152-0107-00
CR1461	152-0141-02			SEMICOND DEVICE:SILICON,30V,150MA	07910	1N4152
CR1462	152-0141-02			SEMICOND DEVICE:SILICON,30V,150MA	07910	1N4152
CR1463	152-0141-02			SEMICOND DEVICE:SILICON,30V,150MA	07910	1N4152
CR1464	152-0153-00			SEMICOND DEVICE:SILICON,15V,50MA	13715	FD7003
CR1465	152-0141-02			SEMICOND DEVICE:SILICON,30V,150MA	07910	1N4152

Ckt No.	Tektronix Part No.	Serial/Model No. Eff	Dscont	Name & Description	Mfr Code	Mfr Part Number
CR1468	152-0141-02			SEMICOND DEVICE:SILICON,30V,150MA	07910	1N4152
CR1472	152-0061-00			SEMICOND DEVICE:SILICON,175V,100MA	80009	152-0061-00
CR1476	152-0061-00	B010100	B129999	SEMICOND DEVICE:SILICON,175V,100MA	80009	152-0061-00
CR1476	152-0107-00	B130000		SEMICOND DEVICE:SILICON,375V,400MA	80009	152-0107-00
CR1482	152-0061-00			SEMICOND DEVICE:SILICON,175V,100MA	80009	152-0061-00
CR1483	152-0061-00			SEMICOND DEVICE:SILICON,175V,100MA	80009	152-0061-00
CR1487	152-0242-00			SEMICOND DEVICE:SILICON,225V,200MA	12969	NDP341
CR1488	152-0242-00			SEMICOND DEVICE:SILICON,225V,200MA	12969	NDP341
CR1511	152-0488-00			SEMICOND DEVICE:SILICON,200V,1500MA	80009	152-0488-00
CR1512	152-0107-00	B010100	B129999X	SEMICOND DEVICE:SILICON,375V,400MA	80009	152-0107-00
CR1513	152-0066-00	B010100	B079999X	SEMICOND DEVICE:SILICON,400V,750MA	02735	37304
CR1514	152-0066-00	B010100	B079999	SEMICOND DEVICE:SILICON,400V,750MA	02735	37304
CR1514	152-0107-00	B080000		SEMICOND DEVICE:SILICON,375V,400MA	80009	152-0107-00
CR1516	152-0107-00	XB080000		SEMICOND DEVICE:SILICON,375V,400MA	80009	152-0107-00
CR1524	152-0141-02			SEMICOND DEVICE:SILICON,30V,150MA	07910	1N4152
CR1532	152-0061-00			SEMICOND DEVICE:SILICON,175V,100MA	80009	152-0061-00
CR1533	152-0141-02			SEMICOND DEVICE:SILICON,30V,150MA	07910	1N4152
CR1534	152-0066-00			SEMICOND DEVICE:SILICON,400V,750MA	02735	37304
CR1535	152-0066-00			SEMICOND DEVICE:SILICON,400V,750MA	02735	37304
CR1536	152-0141-02			SEMICOND DEVICE:SILICON,30V,150MA	07910	1N4152
CR1541	152-0462-00	B010100	B159999	SEMICOND DEVICE:SILICON,200V,2.5A	04713	MDD970-3
CR1541	152-0556-00	B160000		SEMICOND DEVICE:BRIDGE,50V,2.5A	04713	MDA960-1
CR1549	152-0066-00			SEMICOND DEVICE:SILICON,400V,750MA	02735	37304
CR1551	152-0488-00			SEMICOND DEVICE:SILICON,200V,1500MA	80009	152-0488-00
CR1556	152-0141-02			SEMICOND DEVICE:SILICON,30V,150MA	07910	1N4152
CR1559	152-0066-00			SEMICOND DEVICE:SILICON,400V,750MA	02735	37304
CR1561	152-0488-00			SEMICOND DEVICE:SILICON,200V,1500MA	80009	152-0488-00
CR1564	152-0141-02			SEMICOND DEVICE:SILICON,30V,150MA	07910	1N4152
CR1569	152-0066-00			SEMICOND DEVICE:SILICON,400V,750MA	02735	37304
CR1596	152-0141-02			SEMICOND DEVICE:SILICON,30V,150MA	07910	1N4152
CR1691	152-0141-02			SEMICOND DEVICE:SILICON,30V,150MA	07910	1N4152
CR1692	152-0141-02			SEMICOND DEVICE:SILICON,30V,150MA	07910	1N4152
CR1694	152-0141-02			SEMICOND DEVICE:SILICON,30V,150MA	07910	1N4152
CR1696	152-0141-02			SEMICOND DEVICE:SILICON,30V,150MA	07910	1N4152
CR1699	152-0141-02			SEMICOND DEVICE:SILICON,30V,150MA	07910	1N4152
DL339	119-0387-00			DELAY LINE,ELEC:	80009	119-0387-00
DS382	150-0130-00			LAMP,INCAND:5V,60MA	08806	2200DX
DS386	150-0130-00			LAMP,INCAND:5V,60MA	08806	2200DX
DS388	150-0035-00			LAMP,GLOW:90V,0.3MA	08806	A1D-T
DS389	150-0035-00			LAMP,GLOW:90V,0.3MA	08806	A1D-T
DS392	150-0130-00			LAMP,INCAND:5V,60MA	08806	2200DX
DS396	150-0130-00			LAMP,INCAND:5V,60MA	08806	2200DX
DS834	150-0130-00			LAMP,INCAND:5V,60MA	08806	2200DX
DS836	150-0130-00			LAMP,INCAND:5V,60MA	08806	2200DX
DS1140	150-0035-00			LAMP,GLOW:90V,0.3MA	08806	A1D-T
DS1239	150-0035-00			LAMP,GLOW:90V,0.3MA	08806	A1D-T
DS1425	150-0002-00			LAMP,GLOW:0.5 MA 60/125V	08806	NE2T-A1AT
DS1426	150-0002-00			LAMP,GLOW:0.5 MA 60/125V	08806	NE2T-A1AT
DS1570	150-0129-00			LAMP,INCAND:6.3V,200MA	08806	2112D
DS1571	150-0129-00			LAMP,INCAND:6.3V,200MA	08806	2112D
DS1588	150-0130-00			LAMP,INCAND:5V,60MA	08806	2200DX
F1419	159-0016-00			FUSE,CARTRIDGE:3AG,1.5A,250V,FAST-BLOW	71400	AGC 1 1/2

Ckt No.	Tektronix Part No.	Serial/Model No. Eff	Dscont	Name & Description	Mfr Code	Mfr Part Number
F1501	159-0016-00			FUSE,CARTRIDGE:3AG,1.5A,250V,FAST-BLOW	71400	AGC 1 1/2
J1	136-0499-14			CONNECTOR,RCPT,:14 CONTACT	00779	4-380949-4
J2	136-0499-10			CONNECTOR,RCPT,:10 CONTACT	00779	4-380949-0
J3	136-0499-04			CONNECTOR,RCPT,:4 CONTACT	00779	3-380949-4
J4	131-0679-00	B010100	B165249	CONNECTOR,RCPT,:BNC W/HARDWARE	24931	28JR168-1
J4	131-0679-01	B165250		CONNECTOR,RCPT,:BNC W/HARDWARE	24931	28JR168-1
J5	136-0499-10			CONNECTOR,RCPT,:10 CONTACT	00779	4-380949-0
J6	136-0499-14			CONNECTOR,RCPT,:14 CONTACT	00779	4-380949-4
J54	131-0679-00	B010100	B165249	CONNECTOR,RCPT,:BNC W/HARDWARE	24931	28JR168-1
J54	131-0679-01	B165250		CONNECTOR,RCPT,:BNC W/HARDWARE	24931	28JR168-1
J162	131-1003-00			CONNECTOR BODY,:CKT BD MT,3 PRONG	80009	131-1003-00
J164	131-1003-00			CONNECTOR BODY,:CKT BD MT,3 PRONG	80009	131-1003-00
J165	131-0955-00			CONNECTOR,RCPT,:BNC,FEMALE	24931	28JR200-1
J168	131-1003-00			CONNECTOR BODY,:CKT BD MT,3 PRONG	80009	131-1003-00
J262	131-1003-00			CONNECTOR BODY,:CKT BD MT,3 PRONG	80009	131-1003-00
J338	131-1003-00			CONNECTOR BODY,:CKT BD MT,3 PRONG	80009	131-1003-00
J339	131-1003-00			CONNECTOR BODY,:CKT BD MT,3 PRONG	80009	131-1003-00
J349	131-1003-00			CONNECTOR BODY,:CKT BD MT,3 PRONG	80009	131-1003-00
J351	131-1003-00			CONNECTOR BODY,:CKT BD MT,3 PRONG	80009	131-1003-00
J359	131-1003-00			CONNECTOR BODY,:CKT BD MT,3 PRONG	80009	131-1003-00
J500	131-0955-00			CONNECTOR,RCPT,:BNC,FEMALE	24931	28JR200-1
J507	131-1003-00			CONNECTOR BODY,:CKT BD MT,3 PRONG	80009	131-1003-00
J508	131-1003-00			CONNECTOR BODY,:CKT BD MT,3 PRONG	80009	131-1003-00
J509	131-1003-00			CONNECTOR BODY,:CKT BD MT,3 PRONG	80009	131-1003-00
J600	131-0955-00			CONNECTOR,RCPT,:BNC,FEMALE	24931	28JR200-1
J678	131-1003-00	XB120000		CONNECTOR BODY,:CKT BD MT,3 PRONG	80009	131-1003-00
J688	131-1003-00	XB120000		CONNECTOR BODY,:CKT BD MT,3 PRONG	80009	131-1003-00
J1317	131-1003-00			CONNECTOR BODY,:CKT BD MT,3 PRONG	80009	131-1003-00
J1318	131-0955-00			CONNECTOR,RCPT,:BNC,FEMALE	24931	28JR200-1
J1319	131-1003-00			CONNECTOR BODY,:CKT BD MT,3 PRONG	80009	131-1003-00
J1337	131-1003-00			CONNECTOR BODY,:CKT BD MT,3 PRONG	80009	131-1003-00
J1338	131-0955-00			CONNECTOR,RCPT,:BNC,FEMALE	24931	28JR200-1
J1450	131-0955-00			CONNECTOR,RCPT,:BNC,FEMALE	24931	28JR200-1
L122	108-0181-01	XB010400		COIL,RF:0.2UH	80009	108-0181-01
L149	108-0181-01			COIL,RF:0.2UH	80009	108-0181-01
L249	108-0181-01			COIL,RF:0.2UH	80009	108-0181-01
L338	108-0182-00			COIL,RF:0.3UH	80009	108-0182-00
L339	108-0182-00			COIL,RF:0.3UH	80009	108-0182-00
L440	108-0370-00			COIL,RF:0.14UH	80009	108-0370-00
L442	108-0370-00			COIL,RF:0.14UH	80009	108-0370-00
L461	108-0740-00			TRANSFORMER,RF:225NH	80009	108-0740-00
L471	108-0740-00			TRANSFORMER,RF:225NH	80009	108-0740-00
L507	108-0655-00	XB199820		COIL,RF:75NH	80009	108-0655-00
L546	108-0370-00			COIL,RF:0.14UH	80009	108-0370-00
L547	108-0370-00			COIL,RF:0.14UH	80009	108-0370-00
L646	108-0370-00			COIL,RF:0.14UH	80009	108-0370-00
L647	108-0370-00			COIL,RF:0.14UH	80009	108-0370-00
L874	108-0538-00			COIL,RF:2.7UH	76493	70F276A1
L891	108-0538-00			COIL,RF:2.7UH	76493	70F276A1
L893	108-0538-00			COIL,RF:2.7UH	76493	70F276A1
L897	108-0538-00			COIL,RF:2.7UH	76493	70F276A1
L1419	108-0422-00			COIL,RF:80UH	80009	108-0422-00

Ckt No.	Tektronix Part No.	Serial/Model No. Eff	Dscont	Name & Description	Mfr Code	Mfr Part Number
L1440	108-0713-00			COIL,TUBE DEFLE:TRACE ROTATION	80009	108-0713-00
L1446	108-0714-00			COIL,TUBE DEFLE:Y AXIS ALIGNMENT	80009	108-0714-00
L1596	108-0245-00			COIL,RF:3.9UH	80009	108-0245-00
LR122	108-0282-00	XB010250	B010379X	COIL,RF:0.13UH	80009	108-0282-00
LR461	108-0284-00			COIL,RF:0.1UH	80009	108-0284-00
LR471	108-0284-00			COIL,RF:0.1UH	80009	108-0284-00
Q20A,B	151-1032-00			TRANSISTOR:SILICON,FET,DUAL	17856	DN399
Q32	151-0259-00			TRANSISTOR:SILICON,NPN	80009	151-0259-00
Q36	151-0259-00			TRANSISTOR:SILICON,NPN	80009	151-0259-00
Q42	151-0221-00			TRANSISTOR:SILICON,PNP	80009	151-0221-00
Q44	151-0221-00			TRANSISTOR:SILICON,PNP	80009	151-0221-00
Q70A,B	151-1032-00			TRANSISTOR:SILICON,FET,DUAL	17856	DN399
Q82	151-0259-00			TRANSISTOR:SILICON,NPN	80009	151-0259-00
Q86	151-0259-00			TRANSISTOR:SILICON,NPN	80009	151-0259-00
Q92	151-0221-00			TRANSISTOR:SILICON,PNP	80009	151-0221-00
Q94	151-0221-00			TRANSISTOR:SILICON,PNP	80009	151-0221-00
Q102	151-0259-00	B010100	B010349	TRANSISTOR:SILICON,NPN	80009	151-0259-00
Q102	151-0427-00	B010350		TRANSISTOR:SILICON,NPN	80009	151-0427-00
Q104	151-0259-00	B010100	B010349	TRANSISTOR:SILICON,NPN	80009	151-0259-00
Q104	151-0427-00	B010350		TRANSISTOR:SILICON,NPN	80009	151-0427-00
Q122	151-0198-00			TRANSISTOR:SILICON,NPN,SEL FROM MPS918	80009	151-0198-00
Q124	151-0198-00			TRANSISTOR:SILICON,NPN,SEL FROM MPS918	80009	151-0198-00
Q132[1]	151-0271-00	B010100	B010199	TRANSISTOR:SILICON,PNP	80009	151-0271-00
Q132	153-0609-00	B010200		SEMICOND DVC SE:SILICON,PNP	80009	153-0609-00
Q134[1]	151-0271-00	B010100	B010199	TRANSISTOR:SILICON,PNP	80009	151-0271-00
Q134	153-0609-00	B010200		SEMICOND DVC SE:SILICON,PNP	80009	153-0609-00
Q142	151-0271-00			TRANSISTOR:SILICON,PNP	80009	151-0271-00
Q148	151-0271-00			TRANSISTOR:SILICON,PNP	80009	151-0271-00
Q152	151-0221-00			TRANSISTOR:SILICON,PNP	80009	151-0221-00
Q162	151-0221-00			TRANSISTOR:SILICON,PNP	80009	151-0221-00
Q164	151-0221-00			TRANSISTOR:SILICON,PNP	80009	151-0221-00
Q168	151-0190-01	B010100	B116669	TRANSISTOR:SILICON,NPN	07910	TE23652
Q168	151-0190-00	B116670		TRANSISTOR:SILICON,NPN	80009	151-0190-00
Q202	151-0259-00	B010100	B010349	TRANSISTOR:SILICON,NPN	80009	151-0259-00
Q202	151-0427-00	B010350		TRANSISTOR:SILICON,NPN	80009	151-0427-00
Q204	151-0259-00	B010100	B010349	TRANSISTOR:SILICON,NPN	80009	151-0259-00
Q204	151-0427-00	B010350		TRANSISTOR:SILICON,NPN	80009	151-0427-00
Q222, Q224	153-0547-00			SEMICOND DVC SE:SILICON,NPN,MATCHED	80009	153-0547-00
Q226, Q228	153-0547-00			SEMICOND DVC SE:SILICON,NPN,MATCHED	80009	153-0547-00
Q232[2]	151-0271-00	B010100	B010199	TRANSISTOR:SILICON,PNP	80009	151-0271-00
Q232	153-0609-00	B010200		SEMICOND DVC SE:SILICON,PNP	80009	153-0609-00
Q234[2]	151-0271-00	B010100	B010199	TRANSISTOR:SILICON,PNP	80009	151-0271-00
Q234	153-0609-00	B010200		SEMICOND DVC SE:SILICON,PNP	80009	153-0609-00
Q242	151-0271-00			TRANSISTOR:SILICON,PNP	80009	151-0271-00
Q248	151-0271-00			TRANSISTOR:SILICON,PNP	80009	151-0271-00
Q252	151-0221-00			TRANSISTOR:SILICON,PNP	80009	151-0221-00
Q262	151-0221-00			TRANSISTOR:SILICON,PNP	80009	151-0221-00
Q304	151-0221-00			TRANSISTOR:SILICON,PNP	80009	151-0221-00
Q308	151-0221-00			TRANSISTOR:SILICON,PNP	80009	151-0221-00
Q314	151-0221-00			TRANSISTOR:SILICON,PNP	80009	151-0221-00

[1]Q132 and Q134 furnished as a matched pair.
[2]Q232 and Q234 furnished as a matched pair.

Ckt No.	Tektronix Part No.	Serial/Model No. Eff	Dscont	Name & Description	Mfr Code	Mfr Part Number
Q318	151-0221-00			TRANSISTOR:SILICON,PNP	80009	151-0221-00
Q322	151-0269-00			TRANSISTOR:SILICON,NPN,SEL FROM SE3005	80009	151-0269-00
Q324	151-0269-00			TRANSISTOR:SILICON,NPN,SEL FROM SE3005	80009	151-0269-00
Q332	151-0188-00			TRANSISTOR:SILICON,PNP	01295	2N3906
Q344	151-0367-00			TRANSISTOR:SILICON,NPN,SEL FROM 3571TP	80009	151-0367-00
Q346	151-0221-00			TRANSISTOR:SILICON,PNP	80009	151-0221-00
Q352	151-0223-00			TRANSISTOR:SILICON,NPN	80009	151-0223-00
Q358	151-0223-00			TRANSISTOR:SILICON,NPN	80009	151-0223-00
Q364	151-0190-01	B010100	B116669	TRANSISTOR:SILICON,NPN	07910	TE23652
Q364	151-0190-00	B116670		TRANSISTOR:SILICON,NPN	80009	151-0190-00
Q374	151-0190-01	B010100	B116669	TRANSISTOR:SILICON,NPN	07910	TE23652
Q374	151-0190-00	B116670		TRANSISTOR:SILICON,NPN	80009	151-0190-00
Q382	151-0219-00	B010100	B159999	TRANSISTOR:SILICON,PNP	07263	SS22650
Q382	151-0435-00	B160000		TRANSISTOR:SILICON,PNP	04713	MPS-A65
Q386	151-0219-00	B010100	B159999	TRANSISTOR:SILICON,PNP	07263	SS22650
Q386	151-0301-00	B160000		TRANSISTOR:SILICON,PNP	04713	2N2907A
Q392	151-0219-00	B010100	B159999	TRANSISTOR:SILICON,PNP	07263	SS22650
Q392	151-0435-00	B160000		TRANSISTOR:SILICON,PNP	04713	MPS-A65
Q396	151-0219-00	B010100	B159999	TRANSISTOR:SILICON,PNP	07263	SS22650
Q396	151-0301-00	B160000		TRANSISTOR:SILICON,PNP	04713	2N2907A
Q522	151-1042-00			SEMICOND DVC SE:MATCHED PAIR FET	80009	151-1042-00
Q524						
Q550	151-0221-00			TRANSISTOR:SILICON,PNP	80009	151-0221-00
Q552	151-0221-00			TRANSISTOR:SILICON,PNP	80009	151-0221-00
Q622	151-1042-00			SEMICOND DVC SE:MATCHED PAIR FET	80009	151-1042-00
Q624						
Q650	151-0221-00			TRANSISTOR:SILICON,PNP	80009	151-0221-00
Q652	151-0221-00			TRANSISTOR:SILICON,PNP	80009	151-0221-00
Q672	151-0369-00	B010100	B010359	TRANSISTOR:SILICON,PNP	01295	SKA6664
Q672[1]	151-0221-00	B010360	B010399	TRANSISTOR:SILICON,PNP	80009	151-0221-00
Q672	153-0597-00	B010400		SEMICOND DVC SE:SILICON,PNP	80009	153-0597-00
Q678	151-0367-00			TRANSISTOR:SILICON,NPN,SEL FROM 3571TP	80009	151-0367-00
Q682	151-0369-00	B010100	B010359	TRANSISTOR:SILICON,PNP	01295	SKA6664
Q682	151-0221-00	B010360	B010399	TRANSISTOR:SILICON,PNP	80009	151-0221-00
Q682[1]	153-0597-00	B010400		SEMICOND DVC SE:SILICON,PNP	80009	153-0597-00
Q688	151-0367-00			TRANSISTOR:SILICON,NPN,SEL FROM 3571TP	80009	151-0367-00
Q804	151-0220-00	B010100	B109999	TRANSISTOR:SILICON,PNP	80009	151-0220-00
Q804	151-0199-00	B110000	B179999	TRANSISTOR:SILICON,PNP	04713	MPS3640
Q804	151-0220-03	B180000		TRANSISTOR:SILICON,PNP	80009	151-0220-03
Q812	151-0220-00	B010100	B179999	TRANSISTOR:SILICON,PNP	80009	151-0220-00
Q812	151-0220-03	B180000		TRANSISTOR:SILICON,PNP	80009	151-0220-03
Q814	151-0220-00	B010100	B179999	TRANSISTOR:SILICON,PNP	80009	151-0220-00
Q814	151-0220-03	B180000		TRANSISTOR:SILICON,PNP	80009	151-0220-03
Q822	151-0220-00	B010100	B179999	TRANSISTOR:SILICON,PNP	80009	151-0220-00
Q822	151-0220-03	B180000		TRANSISTOR:SILICON,PNP	80009	151-0220-03
Q824	151-0220-00	B010100	B179999	TRANSISTOR:SILICON,PNP	80009	151-0220-00
Q824	151-0220-03	B180000		TRANSISTOR:SILICON,PNP	80009	151-0220-03
Q828	151-0190-01	B010100	B116669	TRANSISTOR:SILICON,NPN	07910	TE23652
Q828	151-0190-00	B116670		TRANSISTOR:SILICON,NPN	80009	151-0190-00
Q854	151-0220-00	B010100	B109999	TRANSISTOR:SILICON,PNP	80009	151-0220-00
Q854	151-0199-00	B110000	B179999	TRANSISTOR:SILICON,PNP	04713	MPS3640
Q854	151-0220-03	B180000		TRANSISTOR:SILICON,PNP	80009	151-0220-03
Q862	151-0220-00	B010100	B179999	TRANSISTOR:SILICON,PNP	80009	151-0220-00

[1]Q672 and Q682 furnished as a matched pair.

Ckt No.	Tektronix Part No.	Serial/Model No. Eff	Dscont	Name & Description	Mfr Code	Mfr Part Number
Q862	151-0220-03	B180000		TRANSISTOR:SILICON,PNP	80009	151-0220-03
Q864	151-0220-00	B010100	B179999	TRANSISTOR:SILICON,PNP	80009	151-0220-00
Q864	151-0220-03	B180000		TRANSISTOR:SILICON,PNP	80009	151-0220-03
Q1002A,B	151-0354-00			TRANSISTOR:SILICON,PNP,DUAL	32293	ITS1200A
Q1012	151-0220-00	B010100	B179999	TRANSISTOR:SILICON,PNP	80009	151-0220-00
Q1012	151-0220-03	B180000		TRANSISTOR:SILICON,PNP	80009	151-0220-03
Q1014	151-0220-00	B010100	B179999	TRANSISTOR:SILICON,PNP	80009	151-0220-00
Q1014	151-0220-03	B180000		TRANSISTOR:SILICON,PNP	80009	151-0220-03
Q1024	151-0283-00			TRANSISTOR:SILICON,NPN	07263	S032790
Q1030	151-1025-00			TRANSISTOR:SILICON,JFE,N-CHANNEL	01295	SBA8129
Q1036	151-0127-00			TRANSISTOR:SILICON,NPN	07263	S6075
Q1038	151-0188-00			TRANSISTOR:SILICON,PNP	01295	2N3906
Q1042A,B	151-0232-00			TRANSISTOR:SILICON,NPN,DUAL	12040	NS7348
Q1044	151-0190-00	B010100	B116669	TRANSISTOR:SILICON,NPN	80009	151-0190-00
Q1044	151-0190-00	B116670		TRANSISTOR:SILICON,NPN	80009	151-0190-00
Q1052	151-0220-00	B010100	B179999	TRANSISTOR:SILICON,PNP	80009	151-0220-00
Q1052	151-0220-03	B180000		TRANSISTOR:SILICON,PNP	80009	151-0220-03
Q1054	151-0220-00	B010100	B179999	TRANSISTOR:SILICON,PNP	80009	151-0220-00
Q1054	151-0220-03	B180000		TRANSISTOR:SILICON,PNP	80009	151-0220-03
Q1062A,B	151-0354-00			TRANSISTOR:SILICON,PNP,DUAL	32293	ITS1200A
Q1063	151-0188-00			TRANSISTOR:SILICON,PNP	01295	2N3906
Q1072	151-0220-00	B010100	B179999	TRANSISTOR:SILICON,PNP	80009	151-0220-00
Q1072	151-0220-03	B180000		TRANSISTOR:SILICON,PNP	80009	151-0220-03
Q1074	151-0220-00	B010100	B179999	TRANSISTOR:SILICON,PNP	80009	151-0220-00
Q1074	151-0220-03	B180000		TRANSISTOR:SILICON,PNP	80009	151-0220-03
Q1084	151-0283-00			TRANSISTOR:SILICON,NPN	07263	S032790
Q1090	151-1025-00			TRANSISTOR:SILICON,JFE,N-CHANNEL	01295	SBA8129
Q1096	151-0127-00			TRANSISTOR:SILICON,NPN	07263	S6075
Q1098	151-0188-00			TRANSISTOR:SILICON,PNP	01295	2N3906
Q1140	151-0302-00			TRANSISTOR:SILICON,NPN	04713	2N2222A
Q1170	151-0302-00			TRANSISTOR:SILICON,NPN	04713	2N2222A
Q1214	151-0220-00	B010100	B179999	TRANSISTOR:SILICON,PNP	80009	151-0220-00
Q1214	151-0220-03	B180000		TRANSISTOR:SILICON,PNP	80009	151-0220-03
Q1218	151-0216-00			TRANSISTOR:SILICON,PNP	04713	MPS6523
Q1224	151-0190-02			TRANSISTOR:SILICON,NPN	04713	2N3904
Q1226	151-0188-00			TRANSISTOR:SILICON,PNP	01295	2N3906
Q1234	151-0190-02			TRANSISTOR:SILICON,NPN	04713	2N3904
Q1236	151-0188-00			TRANSISTOR:SILICON,PNP	01295	2N3906
Q1244	151-0302-00	B010100	B199819	TRANSISTOR:SILICON,NPN	04713	2N2222A
Q1244	151-0190-00	B199820		TRANSISTOR:SILICON,NPN	80009	151-0190-00
Q1254	151-0301-00			TRANSISTOR:SILICON,PNP	04713	2N2907A
Q1262	151-0406-00			TRANSISTOR:SILICON,PNP	07263	S37880
Q1266	151-0407-00			TRANSISTOR:SILICON,NPN	80009	151-0407-00
Q1274	151-0302-00			TRANSISTOR:SILICON,NPN	04713	2N2222A
Q1282	151-0406-00			TRANSISTOR:SILICON,PNP	07263	S37880
Q1286	151-0407-00			TRANSISTOR:SILICON,NPN	80009	151-0407-00
Q1304	151-0190-01	B010100	B116669	TRANSISTOR:SILICON,NPN	07910	TE23652
Q1304	151-0190-00	B116670		TRANSISTOR:SILICON,NPN	80009	151-0190-00
Q1306	151-0190-01	B010100	B116669	TRANSISTOR:SILICON,NPN	07910	TE23652
Q1306	151-0190-00	B116670		TRANSISTOR:SILICON,NPN	80009	151-0190-00
Q1314	151-0220-00	B010100	B179999	TRANSISTOR:SILICON,PNP	80009	151-0220-00
Q1314	151-0220-03	B180000		TRANSISTOR:SILICON,PNP	80009	151-0220-03
Q1324	151-0190-01	B010100	B116669	TRANSISTOR:SILICON,NPN	07910	TE23652

Ckt No.	Tektronix Part No.	Serial/Model No. Eff	Dscont	Name & Description	Mfr Code	Mfr Part Number
Q1324	151-0190-00	B116670		TRANSISTOR:SILICON,NPN	80009	151-0190-00
Q1326	151-0190-01	B010100	B116669	TRANSISTOR:SILICON,NPN	07910	TE23652
Q1326	151-0190-00	B116670		TRANSISTOR:SILICON,NPN	80009	151-0190-00
Q1334	151-0220-00	B010100	B179999	TRANSISTOR:SILICON,PNP	80009	151-0220-00
Q1334	151-0220-03	B180000		TRANSISTOR:SILICON,PNP	80009	151-0220-03
Q1404	151-0126-00			TRANSISTOR:SILICON,NPN	94144	2N2484
Q1408	151-0301-00			TRANSISTOR:SILICON,PNP	04713	2N2907A
Q1413	151-0188-00			TRANSISTOR:SILICON,PNP	01295	2N3906
Q1414	151-0190-01	B010100	B116669	TRANSISTOR:SILICON,NPN	07910	TE23652
Q1414	151-0190-00	B116670		TRANSISTOR:SILICON,NPN	80009	151-0190-00
Q1416	151-0136-00			TRANSISTOR:SILICON,NPN	02735	35495
Q1418	151-0140-00			TRANSISTOR:SILICON,NPN	02735	36568
Q1466	151-0223-00			TRANSISTOR:SILICON,NPN	80009	151-0223-00
Q1472	151-0188-00			TRANSISTOR:SILICON,PNP	01295	2N3906
Q1474	151-0407-00			TRANSISTOR:SILICON,NPN	80009	151-0407-00
Q1478	151-0406-00			TRANSISTOR:SILICON,PNP	07263	S37880
Q1514	151-0506-00	B010100	B079999X	TRANSISTOR:SILICON,CONTROLLED RECTIFIER	03508	C106B2
Q1516	151-0311-01	XB080000		TRANSISTOR:SILICON,NPN	04713	MJE340
Q1518	151-0347-00	XB080000		TRANSISTOR:SILICON,NPN	80009	151-0347-00
Q1532	151-0347-00			TRANSISTOR:SILICON,NPN	80009	151-0347-00
Q1534	151-0349-00	B010100	B079999	TRANSISTOR:SILICON,NPN,SEL FROM MJE2801	04713	SJE924
Q1534	151-0436-00	B080000		TRANSISTOR:SILICON,NPN	80009	151-0436-00
Q1536	151-0347-00			TRANSISTOR:SILICON,NPN	80009	151-0347-00
Q1544	151-0302-00			TRANSISTOR:SILICON,NPN	04713	2N2222A
Q1546	151-0349-00			TRANSISTOR:SILICON,NPN,SEL FROM MJE2801	04713	SJE924
Q1548	151-0302-00			TRANSISTOR:SILICON,NPN	04713	2N2222A
Q1556	151-0390-00			TRANSISTOR:SILICON,NPN	04713	MPS-U45
Q1558	151-0302-00			TRANSISTOR:SILICON,NPN	04713	2N2222A
Q1564	151-0302-00			TRANSISTOR:SILICON,NPN	04713	2N2222A
Q1566	151-0349-00			TRANSISTOR:SILICON,NPN,SEL FROM MJE2801	04713	SJE924
Q1568	151-0302-00			TRANSISTOR:SILICON,NPN	04713	2N2222A
Q1570	151-0390-00			TRANSISTOR:SILICON,NPN	04713	MPS-U45
Q1582	151-0302-00			TRANSISTOR:SILICON,NPN	04713	2N2222A
Q1588	151-0302-00			TRANSISTOR:SILICON,NPN	04713	2N2222A
Q1590	151-0342-00			TRANSISTOR:SILICON,PNP	07263	2N4249
Q1594	151-0342-00			TRANSISTOR:SILICON,PNP	07263	2N4249
Q1598	151-0164-00			TRANSISTOR:SILICON,PNP	80009	151-0164-00
Q1698	151-0301-00			TRANSISTOR:SILICON,PNP	04713	2N2907A
R1	315-0510-00			RES.,FXD,CMPSN:51 OHM,5%,0.25W	01121	CB5105
R3	307-0110-00	B010100	B011071	RES.,FXD,CMPSN:3 OHM,5%,0.25W	01121	CB30G5
R3	317-0047-00	B011072		RES.,FXD,CMPSN:4.7 OHM,5%,0.125W	01121	BB4R705
R4	316-0105-00			RES.,FXD,CMPSN:1M OHM,10%,0.25W	01121	CB1051
R6	316-0101-00	B010100	B010299	RES.,FXD,CMPSN:100 OHM,10%,0.25W	01121	CB1011
R6	317-0101-00	B010300		RES.,FXD,CMPSN:100 OHM,5%,0.125W	01121	BB1015
R15	321-0481-00			RES.,FXD,FILM:1M OHM,1%,0.125W	75042	CEAT0-1004F
R16	316-0474-00			RES.,FXD,CMPSN:470K OHM,10%,0.25W	01121	CB4741
R18	315-0331-00	B010100	B069999	RES.,FXD,CMPSN:330 OHM,5%,0.25W	01121	CB3315
R18	315-0361-00	B070000		RES.,FXD,CMPSN:360 OHM,5%,0.25W	01121	CB3615
R21	315-0151-00	B010100	B069999	RES.,FXD,CMPSN:150 OHM,5%,0.25W	01121	CB1515
R21	315-0470-00	B070000		RES.,FXD,CMPSN:47 OHM,5%,0.25W	01121	CB4705
R22	321-0030-02			RES.,FXD,FILM:20 OHM,0.5%,0.125W	75042	CEAT2-20R00D
R23	321-0030-02			RES.,FXD,FILM:20 OHM,0.5%,0.125W	75042	CEAT2-20R00D
R25	311-1227-00			RES.,VAR,NONWIR:5K OHM,20%,0.50W	80294	3386F-T04-502

Ckt No.	Tektronix Part No.	Serial/Model No. Eff	Dscont	Name & Description	Mfr Code	Mfr Part Number
R26	315-0123-00			RES.,FXD,CMPSN:12K OHM,5%,0.25W	01121	CB1235
R27	315-0151-00			RES.,FXD,CMPSN:150 OHM,5%,0.25W	01121	CB1515
R32	321-0208-00			RES.,FXD,FILM:1.43K OHM,1%,0.125W	75042	CEAT0-1431F
R33	321-0097-00			RES.,FXD,FILM:100 OHM,1%,0.125W	75042	CEAT0-1000F
R34[1]	315-0434-00			RES.,FXD,CMPSN:430K OHM,5%,0.25W	01121	CB4345
R35	315-0104-00			RES.,FXD,CMPSN:100K OHM,5%,0.25W	01121	CB1045
R36	321-0208-00			RES.,FXD,FILM:1.43K OHM,1%,0.125W	75042	CEAT0-1431F
R37	315-0621-00			RES.,FXD,CMPSN:620 OHM,5%,0.25W	01121	CB6215
R38	315-0621-00			RES.,FXD,CMPSN:620 OHM,5%,0.25W	01121	CB6215
R39	316-0101-00			RES.,FXD,CMPSN:100 OHM,10%,0.25W	01121	CB1011
R41	321-0190-00			RES.,FXD,FILM:931 OHM,1%,0.125W	75042	CEAT0-9310F
R42	316-0101-00			RES.,FXD,CMPSN:100 OHM,10%,0.25W	01121	CB1011
R43	321-0190-00			RES.,FXD,FILM:931 OHM,1%,0.125W	75042	CEAT0-9310F
R44	321-0098-01			RES.,FXD,FILM:102 OHM,0.5%,0.125W	75042	CEAT0-1020D
R45	321-0098-01			RES.,FXD,FILM:102 OHM,0.5%,0.125W	75042	CEAT0-1020D
R46	321-0126-01			RES.,FXD,FILM:200 OHM,0.5%,0125W	91637	MFF1816G200R0D
R47	311-0635-00			RES.,VAR,NONWIR:1K OHM,10%,0.50W	80740	62-56-3
R48	311-0635-00			RES.,VAR,NONWIR:1K OHM,10%,0.50W	80740	62-56-3
R49	321-0080-00	B010100	B010799	RES.,FXD,FILM:66.5 OHM,1%,0.125W	75042	CEAT0-66R50F
R49	321-0080-01	B010800		RES.,FXD,FILM:66.5 OHM,0.5%,0.125W	91637	MFF1816G66R50F
R51	315-0510-00			RES.,FXD,CMPSN:51 OHM,5%,0.25W	01121	CB5105
R53	307-0110-00	B010100	B011071	RES.,FXD,CMPSN:3 OHM,5%,0.25W	01121	CB30G5
R53	317-0047-00	B011072		RES.,FXD,CMPSN:4.7 OHM,5%,0.125W	01121	BB4R705
R54	316-0105-00			RES.,FXD,CMPSN:1M OHM,10%,0.25W	01121	CB1051
R56	316-0101-00	B010100	B010299	RES.,FXD,CMPSN:100 OHM,10%,0.25W	01121	CB1011
R56	317-0101-00	B010300		RES.,FXD,CMPSN:100 OHM,5%,0.125W	01121	BB1015
R65	321-0481-00			RES.,FXD,FILM:1M OHM,1%,0.125W	75042	CEAT0-1004F
R66	316-0474-00			RES.,FXD,CMPSN:470K OHM,10%,0.25W	01121	CB4741
R68	315-0331-00	B010100	B069999	RES.,FXD,CMPSN:330 OHM,5%,0.25W	01121	CB3315
R68	315-0361-00	B070000		RES.,FXD,CMPSN:360 OHM,5%,0.25W	01121	CB3615
R71	315-0151-00	B010100	B069999	RES.,FXD,CMPSN:150 OHM,5%,0.25W	01121	CB1515
R71	315-0470-00	B070000		RES.,FXD,CMPSN:47 OHM,5%,0.25W	01121	CB4705
R72	321-0030-02			RES.,FXD,FILM:20 OHM,0.5%,0.125W	75042	CEAT2-20R00D
R73	321-0030-02			RES.,FXD,FILM:20 OHM,0.5%,0.125W	75042	CEAT2-20R00D
R75	311-1227-00			RES.,VAR,NONWIR:5K OHM,20%,0.50W	80294	3386F-T04-502
R76	315-0123-00			RES.,FXD,CMPSN:12K OHM,5%,0.25W	01121	CB1235
R77	315-0151-00			RES.,FXD,CMPSN:150 OHM,5%,0.25W	01121	CB1515
R82	321-0208-00			RES.,FXD,FILM:1.43K OHM,1%,0.125W	75042	CEAT0-1431F
R83	321-0097-00			RES.,FXD,FILM:100 OHM,1%,0.125W	75042	CEAT0-1000F
R84[1]	315-0434-00			RES.,FXD,CMPSN:430K OHM,5%,0.25W	01121	CB4345
R85	315-0104-00			RES.,FXD,CMPSN:100K OHM,5%,0.25W	01121	CB1045
R86	321-0208-00			RES.,FXD,FILM:1.43K OHM,1%,0.125W	75042	CEAT0-1431F
R87	315-0621-00			RES.,FXD,CMPSN:620 OHM,5%,0.25W	01121	CB6215
R88	315-0621-00			RES.,FXD,CMPSN:620 OHM,5%,0.25W	01121	CB6215
R91	321-0190-00			RES.,FXD,FILM:931 OHM,1%,0.125W	75042	CEAT0-9310F
R92	316-0101-00			RES.,FXD,CMPSN:100 OHM,10%,0.25W	01121	CB1011
R93	321-0190-00			RES.,FXD,FILM:931 OHM,1%,0.125W	75042	CEAT0-9310F
R94	321-0098-01			RES.,FXD,FILM:102 OHM,0.5%,0.125W	75042	CEAT0-1020D
R95	321-0098-01			RES.,FXD,FILM:102 OHM,0.5%,0.125W	75042	CEAT0-1020D
R96	321-0126-01			RES.,FXD,FILM:200 OHM,0.5%,0125W	91637	MFF1816G200R0D
R97	311-0635-00			RES.,VAR,NONWIR:1K OHM,10%,0.50W	80740	62-56-3
R98	311-0635-00			RES.,VAR,NONWIR:1K OHM,10%,0.50W	80740	62-56-3
R99	321-0080-00	B010100	B010799	RES.,FXD,FILM:66.5 OHM,1%,0.125W	75042	CEAT0-66R50F

[1]Not included when 670-3023-00 or 670-3023-01 VERT OUTPUT Board is used.

Ckt No.	Tektronix Part No.	Serial/Model No. Eff	Dscont	Name & Description	Mfr Code	Mfr Part Number
R99	321-0080-01	B010800		RES.,FXD,FILM:66.5 OHM,0.5%,0.125W	91637	MFF1816G66R50F
R101	315-0682-00			RES.,FXD,CMPSN:6.8K OHM,5%,0.25W	01121	CB6825
R102	321-0204-00			RES.,FXD,FILM:1.3K OHM,1%,0.125W	75042	CEAT0-1301F
R103	321-0087-00			RES.,FXD,FILM:78.7 OHM,1%,0.125W	75042	CEAT0-78R70F
R104	321-0204-00			RES.,FXD,FILM:1.3K OHM,1%,0.125W	75042	CEAT0-1301F
R105	311-1225-00	B010100	B010264	RES.,VAR,NONWIR:1K OHM,20%,0.50W	80294	3386F-T04-102
R105	311-1226-00	B010265		RES.,VAR,NONWIR:2.5K OHM,20%,0.50W	80294	3386F-T04-252
R106	315-0301-00			RES.,FXD,CMPSN:300 OHM,5%,0.25W	01121	CB3015
R107	315-0270-00			RES.,FXD,CMPSN:27 OHM,5%,0.25W	01121	CB2705
R108	315-0301-00			RES.,FXD,CMPSN:300 OHM,5%,0.25W	01121	CB3015
R109	315-0270-00			RES.,FXD,CMPSN:27 OHM,5%,0.25W	01121	CB2705
R111	321-0026-00			RES.,FXD,FILM:18.2 OHM,1%,0.125W	75042	CEAT0-18R20F
R112[1]	311-1371-00	B010100	B010399	RES.,VAR,NONWIR:1K OHM,20%,1W	80009	311-1371-00
R112[1]	311-1364-00	B010400		RES.,VAR,NONWIR:1K OHM,10%,0.50W	01121	10M321A
R113	321-0026-00			RES.,FXD,FILM:18.2 OHM,1%,0.125W	75042	CEAT0-18R20F
R114	315-0103-00			RES.,FXD,CMPSN:10K OHM,5%,0.25W	01121	CB1035
R115	311-1228-00			RES.,VAR,NONWIR:10K OHM,20%,0.50W	80294	3386F-T04-103
R116	315-0123-00	XB110000		RES.,FXD,CMPSN:12K OHM,5%,0.25W	01121	CB1235
R117	321-0085-00			RES.,FXD,FILM:75 OHM,1%,0.125W	75042	CEAT0-75R00F
R118	311-1225-00			RES.,VAR,NONWIR:1K OHM,20%,0.50W	80294	3386F-T04-102
R119	321-0085-00			RES.,FXD,FILM:75 OHM,1%,0.125W	75042	CEAT0-75R00F
R120	311-1007-00	XB010200		RES.,VAR,NONWIR:20 OHM,20%,0.50W	80294	3329HG48-200
R121	321-0064-00			RES.,FXD,FILM:45.3 OHM,1%,0.125W	75042	CEAT0-45R30F
R122	311-0634-00	XB010250	B109999	RES.,VAR,NONWIR:500 OHM,10%,0.50W	80740	62-55-3
R122	311-1224-00	B110000		RES.,VAR,NONWIR:500 OHM,20%,0.50W	80294	3386F-T04-501
R123	321-0064-00	B010100	B010199	RES.,FXD,FILM:45.3 OHM,1%,0.125W	75042	CEAT0-45R30F
R123	321-0055-00	B010200		RES.,FXD,FILM:36.5 OHM,1%,0.125W	75042	CEAT0-36R50F
R125	316-0101-00			RES.,FXD,CMPSN:100 OHM,10%,0.25W	01121	CB1011
R127	321-0122-00			RES.,FXD,FILM:182 OHM,1%,0.125W	75042	CEAT0-1820F
R128	321-0122-00			RES.,FXD,FILM:182 OHM,1%,0.125W	75042	CEAT0-1820F
R130	321-0138-00			RES.,FXD,FILM:267 OHM,1%,0.125W	75042	CEAT0-2670F
R132	321-0198-00			RES.,FXD,FILM:1.13K OHM,1%,0.125W	75042	CEAT0-1131F
R133	321-0097-00			RES.,FXD,FILM:100 OHM,1%,0.125W	75042	CEAT0-1000F
R134	321-0198-00			RES.,FXD,FILM:1.13K OHM,1%,0.125W	75042	CEAT0-1131F
R135	316-0101-00			RES.,FXD,CMPSN:100 OHM,10%,0.25W	01121	CB1011
R136	315-0621-00			RES.,FXD,CMPSN:620 OHM,5%,0.25W	01121	CB6215
R137	316-0101-00			RES.,FXD,CMPSN:100 OHM,10%,0.25W	01121	CB1011
R138	315-0621-00			RES.,FXD,CMPSN:620 OHM,5%,0.25W	01121	CB6215
R141	316-0390-00			RES.,FXD,CMPSN:39 OHM,10%,0.25W	01121	CB3901
R142	315-0391-00			RES.,FXD,CMPSN:390 OHM,5%,0.25W	01121	CB3915
R143	321-0200-00			RES.,FXD,FILM:1.18K OHM,1%,0.125W	75042	CEAT0-1181F
R144	321-0084-00			RES.,FXD,FILM:73.2 OHM,1%,0.125W	75042	CEAT0-73R20F
R145	315-0100-00			RES.,FXD,CMPSN:10 OHM,5%,0.25W	01121	CB1005
R146	321-0200-00			RES.,FXD,FILM:1.18K OHM,1%,0.125W	75042	CEAT0-1181F
R147	316-0390-00			RES.,FXD,CMPSN:39 OHM,10%,0.25W	01121	CB3901
R149	311-1225-00			RES.,VAR,NONWIR:1K OHM,20%,0.50W	80294	3386F-T04-102
R151	315-0331-00			RES.,FXD,CMPSN:330 OHM,5%,0.25W	01121	CB3315
R152	321-0160-00			RES.,FXD,FILM:453 OHM,1%,0.125W	75042	CEAT0-4530F
R154	321-0201-00			RES.,FXD,FILM:1.21K OHM,1%,0.125W	75042	CEAT0-1211F
R155	311-1224-00			RES.,VAR,NONWIR:500 OHM,20%,0.50W	80294	3386F-T04-501
R161	315-0331-00			RES.,FXD,CMPSN:330 OHM,5%,0.25W	01121	CB3315
R162	321-0064-00			RES.,FXD,FILM:45.3 OHM,1%,0.125W	75042	CEAT0-45R30F
R164	315-0751-00			RES.,FXD,CMPSN:750 OHM,5%,0.25W	01121	CB7515

[1]Furnished as a unit with S112.

Ckt No.	Tektronix Part No.	Serial/Model No. Eff	Dscont	Name & Description	Mfr Code	Mfr Part Number
R165	315-0331-00	XB110000		RES.,FXD,CMPSN:330 OHM,5%,0.25W	01121	CB3315
R168	321-0064-00			RES.,FXD,FILM:45.3 OHM,1%,0.125W	75042	CEAT0-45R30F
R169	316-0101-00			RES.,FXD,CMPSN:100 OHM,10%,0.25W	01121	CB1011
R201	315-0562-00			RES.,FXD,CMPSN:5.6K OHM,5%,0.25W	01121	CB5625
R202	321-0204-00			RES.,FXD,FILM:1.3K OHM,1%,0.125W	75042	CEAT0-1301F
R203	321-0087-00			RES.,FXD,FILM:78.7 OHM,1%,0.125W	75042	CEAT0-78R70F
R204	321-0204-00			RES.,FXD,FILM:1.3K OHM,1%,0.125W	75042	CEAT0-1301F
R205	311-1225-00	B010100	B010264	RES.,VAR,NONWIR:1K OHM,20%,0.50W	80294	3386F-T04-102
R205	311-1226-00	B010265		RES.,VAR,NONWIR:2.5K OHM,20%,0.50W	80294	3386F-T04-252
R206	315-0301-00			RES.,FXD,CMPSN:300 OHM,5%,0.25W	01121	CB3015
R207	315-0270-00			RES.,FXD,CMPSN:27 OHM,5%,0.25W	01121	CB2705
R208	315-0301-00			RES.,FXD,CMPSN:300 OHM,5%,0.25W	01121	CB3015
R209	315-0270-00			RES.,FXD,CMPSN:27 OHM,5%,0.25W	01121	CB2705
R211	321-0026-00			RES.,FXD,FILM:18.2 OHM,1%,0.125W	75042	CEAT0-18R20F
R212[1]	311-1371-00	B010100	B010399	RES.,VAR,NONWIR:1K OHM,20%,1W	80009	311-1371-00
R212[1]	311-1364-00	B010400		RES.,VAR,NONWIR:1K OHM,10%,0.50W	01121	10M321A
R213	321-0026-00			RES.,FXD,FILM:18.2 OHM,1%,0.125W	75042	CEAT0-18R20F
R214	315-0103-00			RES.,FXD,CMPSN:10K OHM,5%,0.25W	01121	CB1035
R215	311-1228-00			RES.,VAR,NONWIR:10K OHM,20%,0.50W	80294	3386F-T04-103
R217	321-0085-00			RES.,FXD,FILM:75 OHM,1%,0.125W	75042	CEAT0-75R00F
R218	311-1225-00			RES.,VAR,NONWIR:1K OHM,20%,0.50W	80294	3386F-T04-102
R219	321-0085-00			RES.,FXD,FILM:75 OHM,1%,0.125W	75042	CEAT0-75R00F
R220	311-1007-00	XB010200		RES.,VAR,NONWIR:20 OHM,20%,0.50W	80294	3329HG48-200
R221	321-0064-00			RES.,FXD,FILM:45.3 OHM,1%,0.125W	75042	CEAT0-45R30F
R222	316-0101-00			RES.,FXD,CMPSN:100 OHM,10%,0.25W	01121	CB1011
R223	321-0064-00	B010100	B010199	RES.,FXD,FILM:45.3 OHM,1%,0.125W	75042	CEAT0-45R30F
R223	321-0055-00	B010200		RES.,FXD,FILM:36.5 OHM,1%,0.125W	75042	CEAT0-36R50F
R224	316-0103-00			RES.,FXD,CMPSN:10K OHM,10%,0.25W	01121	CB1031
R225	316-0103-00			RES.,FXD,CMPSN:10K OHM,10%,0.25W	01121	CB1031
R226	316-0103-00			RES.,FXD,CMPSN:10K OHM,10%,0.25W	01121	CB1031
R227	321-0122-00			RES.,FXD,FILM:182 OHM,1%,0.125W	75042	CEAT0-1820F
R228	321-0122-00			RES.,FXD,FILM:182 OHM,1%,0.125W	75042	CEAT0-1820F
R229	316-0101-00			RES.,FXD,CMPSN:100 OHM,10%,0.25W	01121	CB1011
R230	321-0138-00			RES.,FXD,FILM:267 OHM,1%,0.125W	75042	CEAT0-2670F
R232	321-0198-00			RES.,FXD,FILM:1.13K OHM,1%,0.125W	75042	CEAT0-1131F
R233	321-0097-00			RES.,FXD,FILM:100 OHM,1%,0.125W	75042	CEAT0-1000F
R234	321-0198-00			RES.,FXD,FILM:1.13K OHM,1%,0.125W	75042	CEAT0-1131F
R235	316-0101-00			RES.,FXD,CMPSN:100 OHM,10%,0.25W	01121	CB1011
R236	315-0621-00			RES.,FXD,CMPSN:620 OHM,5%,0.25W	01121	CB6215
R237	316-0101-00			RES.,FXD,CMPSN:100 OHM,10%,0.25W	01121	CB1011
R238	315-0621-00			RES.,FXD,CMPSN:620 OHM,5%,0.25W	01121	CB6215
R241	316-0390-00			RES.,FXD,CMPSN:39 OHM,10%,0.25W	01121	CB3901
R242	315-0391-00			RES.,FXD,CMPSN:390 OHM,5%,0.25W	01121	CB3915
R243	321-0200-00			RES.,FXD,FILM:1.18K OHM,1%,0.125W	75042	CEAT0-1181F
R244	321-0084-00			RES.,FXD,FILM:73.2 OHM,1%,0.125W	75042	CEAT0-73R20F
R245	315-0270-00			RES.,FXD,CMPSN:27 OHM,5%,0.25W	01121	CB2705
R246	321-0200-00			RES.,FXD,FILM:1.18K OHM,1%,0.125W	75042	CEAT0-1181F
R247	316-0390-00			RES.,FXD,CMPSN:39 OHM,10%,0.25W	01121	CB3901
R249	311-1225-00			RES.,VAR,NONWIR:1K OHM,20%,0.50W	80294	3386F-T04-102
R251	315-0331-00			RES.,FXD,CMPSN:330 OHM,5%,0.25W	01121	CB3315
R252	321-0160-00			RES.,FXD,FILM:453 OHM,1%,0.125W	75042	CEAT0-4530F
R254	321-0201-00			RES.,FXD,FILM:1.21K OHM,1%,0.125W	75042	CEAT0-1211F
R255	311-1224-00			RES.,VAR,NONWIR:500 OHM,20%,0.50W	80294	3386F-T04-501

[1]Furnished as a unit with S212.

Ckt No.	Tektronix Part No.	Serial/Model No. Eff	Dscont	Name & Description	Mfr Code	Mfr Part Number
R261	315-0751-00			RES.,FXD,CMPSN:750 OHM,5%,0.25W	01121	CB7515
R262	321-0064-00			RES.,FXD,FILM:45.3 OHM,1%,0.125W	75042	CEAT0-45R30F
R301	311-1311-00			RES.,VAR,NONWIR:1K OHM,20%,1W	01121	10M155A
R302	321-0236-00			RES.,FXD,FILM:2.8K OHM,1%,0.125W	75042	CEAT0-2801F
R311	311-1311-00			RES.,VAR,NONWIR:1K OHM,20%,1W	01121	10M155A
R312	321-0236-00			RES.,FXD,FILM:2.8K OHM,1%,0.125W	75042	CEAT0-2801F
R321	321-0186-00			RES.,FXD,FILM:845 OHM,1%,0.125W	75042	CEAT0-8450F
R322	321-0186-00			RES.,FXD,FILM:845 OHM,1%,0.125W	75042	CEAT0-8450F
R323	321-0157-00			RES.,FXD,FILM:422 OHM,1%,0.125W	75042	CEAT0-4220F
R324	321-0157-00			RES.,FXD,FILM:422 OHM,1%,0.125W	75042	CEAT0-4220F
R325	321-0114-00			RES.,FXD,FILM:150 OHM,1%,0.125W	75042	CEAT0-1500F
R326	323-0175-00			RES.,FXD,FILM:649 OHM,1%,0.50W	75042	CECT0-6490F
R327	321-0114-00			RES.,FXD,FILM:150 OHM,1%,0.125W	75042	CEAT0-1500F
R331	323-0124-00			RES.,FXD,FILM:191 OHM,1%,0.50W	91637	MFF1226G191R0F
R332	316-0221-00			RES.,FXD,CMPSN:220 OHM,10%,0.25W	01121	CB2211
R334	316-0391-00			RES.,FXD,CMPSN:390 OHM,10%,0.25W	01121	CB3911
R335	321-0065-00			RES.,FXD,FILM:46.4 OHM,1%,0.125W	75042	CEAT0-46R40F
R336	321-0065-00			RES.,FXD,FILM:46.4 OHM,1%,0.125W	75042	CEAT0-46R40F
R340	311-1222-00			RES.,VAR,NONWIR:100 OHM,20%,0.50W	80294	3386F-T04-101
R341	323-0168-00			RES.,FXD,FILM:549 OHM,1%,0.50W	75042	CECT0-5490F
R342	321-0041-00			RES.,FXD,FILM:26.1 OHM,1%,0.125W	75042	CEAT0-26R10F
R343	315-0101-00			RES.,FXD,CMPSN:100 OHM,5%,0.25W	01121	CB1015
R344	321-0093-00			RES.,FXD,FILM:90.9 OHM,1%,0.125W	75042	CEAT0-90R90F
R345	321-0197-00			RES.,FXD,FILM:1.1K OHM,1%,0.125W	75042	CEAT0-1101F
R346	321-0164-00			RES.,FXD,FILM:499 OHM,1%,0.125W	75042	CEAT0-4990F
R347	321-0095-00			RES.,FXD,FILM:95.3 OHM,1%,0.125W	75042	CEAT0-95R30F
R348	321-0114-00			RES.,FXD,FILM:150 OHM,1%,0.125W	75042	CEAT0-1500F
R349	321-0068-00			RES.,FXD,FILM:49.9 OHM,1%,0.125W	75042	CEAT0-49R90F
R351	315-0752-00			RES.,FXD,CMPSN:7.5K OHM,5%,0.25W	01121	CB7525
R352	321-0089-00			RES.,FXD,FILM:82.5 OHM,1%,0.125W	75042	CEAT0-82R50F
R356	315-0683-00			RES.,FXD,CMPSN:68K OHM,5%,0.25W	01121	CB6835
R357	316-0101-00			RES.,FXD,CMPSN:100 OHM,10%,0.25W	01121	CB1011
R358	315-0202-00			RES.,FXD,CMPSN:2K OHM,5%,0.25W	01121	CB2025
R359	315-0272-00			RES.,FXD,CMPSN:2.7K OHM,5%,0.25W	01121	CB2725
R361	321-0193-00			RES.,FXD,FILM:1K OHM,1%,0.125W	75042	CEAT0-1001F
R362	321-0158-00			RES.,FXD,FILM:432 OHM,1%,0.125W	75042	CEAT0-4320F
R364	321-0212-00			RES.,FXD,FILM:1.58K OHM,1%,0.125W	75042	CEAT0-1581F
R365	321-0229-00			RES.,FXD,FILM:2.37K OHM,1%,0.125W	75042	CEAT0-2371F
R367	315-0201-00			RES.,FXD,CMPSN:200 OHM,5%,0.25W	01121	CB2015
R368	321-0122-00			RES.,FXD,FILM:182 OHM,1%,0.125W	75042	CEAT0-1820F
R370	315-0123-00	XB010350		RES.,FXD,CMPSN:12K OHM,5%,0.25W	01121	CB1235
R371	321-0193-00			RES.,FXD,FILM:1K OHM,1%,0.125W	75042	CEAT0-1001F
R372	321-0158-00			RES.,FXD,FILM:432 OHM,1%,0.125W	75042	CEAT0-4320F
R374	321-0212-00			RES.,FXD,FILM:1.58K OHM,1%,0.125W	75042	CEAT0-1581F
R375	321-0229-00			RES.,FXD,FILM:2.37K OHM,1%,0.125W	75042	CEAT0-2371F
R376	315-0201-00			RES.,FXD,CMPSN:200 OHM,5%,0.25W	01121	CB2015
R378	321-0122-00			RES.,FXD,FILM:182 OHM,1%,0.125W	75042	CEAT0-1820F
R381	316-0152-00			RES.,FXD,CMPSN:1.5K OHM,10%,0.25W	01121	CB1521
R383	316-0222-00			RES.,FXD,CMPSN:2.2K OHM,10%,0.25W	01121	CB2221
R384	316-0822-00			RES.,FXD,CMPSN:8.2K OHM,10%,0.25W	01121	CB8221
R386	316-0223-00	B010100	B159999X	RES.,FXD,CMPSN:22K OHM,10%,0.25W	01121	CB2231
R388	316-0154-00			RES.,FXD,CMPSN:150K OHM,10%,0.25W	01121	CB1541
R389	316-0154-00			RES.,FXD,CMPSN:150K OHM,10%,0.25W	01121	CB1541

Ckt No.	Tektronix Part No.	Serial/Model No. Eff	Dscont	Name & Description	Mfr Code	Mfr Part Number
R391	316-0152-00			RES.,FXD,CMPSN:1.5K OHM,10%,0.25W	01121	CB1521
R393	316-0222-00			RES.,FXD,CMPSN:2.2K OHM,10%,0.25W	01121	CB2221
R394	316-0822-00			RES.,FXD,CMPSN:8.2K OHM,10%,0.25W	01121	CB8221
R396	316-0223-00	B010100	B159999X	RES.,FXD,CMPSN:22K OHM,10%,0.25W	01121	CB2231
R400	311-1139-00			RES.,VAR,NONWIR:500 OHM,20%,0.50W	73138	72XW-43-0-501M
R401	321-0068-00			RES.,FXD,FILM:49.9 OHM,1%,0.125W	75042	CEAT0-49R90F
R402	321-0104-00			RES.,FXD,FILM:118 OHM,1%,0.125W	75042	CEAT0-1180F
R403	315-0390-00			RES.,FXD,CMPSN:39 OHM,5%,0.25W	01121	CB3905
R404	321-0070-00			RES.,FXD,FILM:52.3 OHM,1%,0.125W	75042	CEAT0-52R30F
R405	321-0187-00			RES.,FXD,FILM:866 OHM,1%,0.125W	75042	CEAT0-8660F
R407	321-0175-00			RES.,FXD,FILM:649 OHM,1%,0.125W	75042	CEAT0-6490F
R409	321-0178-00			RES.,FXD,FILM:698 OHM,1%,0.125W	75042	CEAT0-6980F
R411	321-0068-00			RES.,FXD,FILM:49.9 OHM,1%,0.125W	75042	CEAT0-49R90F
R414	321-0070-00			RES.,FXD,FILM:52.3 OHM,1%,0.125W	75042	CEAT0-52R30F
R415	315-0100-00			RES.,FXD,CMPSN:10 OHM,5%,0.25W	01121	CB1005
R417	321-0175-00			RES.,FXD,FILM:649 OHM,1%,0.125W	75042	CEAT0-6490F
R419	323-0071-00			RES.,FXD,FILM:53.6 OHM,1%,0.50W	75042	CECT0-53R60F
R421	315-0620-00			RES.,FXD,CMPSN:62 OHM,5%,0.25W	01121	CB6205
R423	315-0471-00	B010100	B010894	RES.,FXD,CMPSN:470 OHM,5%,0.25W	01121	CB4715
R423	315-0391-00	B010895	B011199	RES.,FXD,CMPSN:390 OHM,(NOM VALUE),SEL	01121	CB3915
R423	311-0609-00	B011200		RES.,VAR,NONWIR:2K OHM,10%,0.50W	80740	62-57-3
R424	311-1239-00			RES.,VAR,NONWIR:2.5K OHM,10%,0.50W	73138	72Y-26-0-252K
R426	321-0423-00			RES.,FXD,FILM:249K OHM,1%,0.125W	75042	CEAT0-2493F
R427	323-0158-00	B010100	B010210	RES.,FXD,FILM:432 OHM,1%,0.50W	75042	CECT0-4320F
R427	323-0144-00	B010211		RES.,FXD,FILM:309 OHM,1%,0.50W	75042	CECT0-3090F
R428	323-0158-00	B010100	B010210	RES.,FXD,FILM:432 OHM,1%,0.50W	75042	CECT0-4320F
R428	323-0144-00	B010211		RES.,FXD,FILM:309 OHM,1%,0.50W	75042	CECT0-3090F
R429	311-1236-00	XB010211		RES.,VAR,NONWIR:250 OHM,10%,0.50W	73138	72X-22-0-251K
R433	311-1138-00			RES.,VAR,NONWIR:1K OHM,20%,0.50W	73138	72XW-44-0-102
R434	311-1138-00			RES.,VAR,NONWIR:1K OHM,20%,0.50W	73138	72XW-44-0-102
R437	323-0158-00			RES.,FXD,FILM:432 OHM,1%,0.50W	75042	CECT0-4320F
R438	323-0158-00			RES.,FXD,FILM:432 OHM,1%,0.50W	75042	CECT0-4320F
R440	321-0080-00			RES.,FXD,FILM:66.5 OHM,1%,0.125W	75042	CEAT0-66R50F
R441	321-0064-00			RES.,FXD,FILM:45.3 OHM,1%,0.125W	75042	CEAT0-45R30F
R442	311-1139-00			RES.,VAR,NONWIR:500 OHM,20%,0.50W	73138	72XW-43-0-501M
R443	321-0193-00			RES.,FXD,FILM:1K OHM,1%,0.125W	75042	CEAT0-1001F
R444	315-0302-00			RES.,FXD,CMPSN:3K OHM,5%,0.25W	01121	CB3025
R445	315-0472-00			RES.,FXD,CMPSN:4.7K OHM,5%,0.25W	01121	CB4725
R446	321-0070-00			RES.,FXD,FILM:52.3 OHM,1%,0.125W	75042	CEAT0-52R30F
R447	321-0070-00			RES.,FXD,FILM:52.3 OHM,1%,0.125W	75042	CEAT0-52R30F
R448	322-0662-00			RES.,FXD,FILM:334 OHM,1%,0.25W	75042	CEBT0-3340F
R449	322-0180-00			RES.,FXD,FILM:732 OHM,1%,0.25W	75042	CEBT0-7320F
R451	321-0196-00			RES.,FXD,FILM:1.07K OHM,1%,0.125W	75042	CEAT0-1071F
R452	315-0101-00			RES.,FXD,CMPSN:100 OHM,5%,0.25W	01121	CB1015
R453	321-0223-00			RES.,FXD,FILM:2.05K OHM,1%,0.125W	75042	CEAT0-2051F
R454	321-0164-00			RES.,FXD,FILM:499 OHM,1%,0.125W	75042	CEAT0-4990F
R455	311-1138-00			RES.,VAR,NONWIR:1K OHM,20%,0.50W	73138	72XW-44-0-102
R457	315-0201-00			RES.,FXD,CMPSN:200 OHM,5%,0.25W	01121	CB2015
R461	317-0101-00			RES.,FXD,CMPSN:100 OHM,5%,0.125W	01121	BB1015
R464	310-0700-00			RES.,FXD,WW:430 OHM,1%,WW	80009	310-0700-00
R471	317-0101-00			RES.,FXD,CMPSN:100 OHM,5%,0.125W	01121	BB1015
R474	310-0700-00			RES.,FXD,WW:430 OHM,1%,WW	80009	310-0700-00
R502	315-0754-00			RES.,FXD,CMPSN:750K OHM,5%,0.25W	01121	CB7545

Ckt No.	Tektronix Part No.	Serial/Model No. Eff	Dscont	Name & Description	Mfr Code	Mfr Part Number
R503	315-0334-00			RES.,FXD,CMPSN:330K OHM,5%,0.25W	01121	CB3345
R507	321-0068-00			RES.,FXD,FILM:49.9 OHM,1%,0.125W	75042	CEAT0-49R90F
R508	321-0068-00			RES.,FXD,FILM:49.9 OHM,1%,0.125W	75042	CEAT0-49R90F
R509	321-0068-00			RES.,FXD,FILM:49.9 OHM,1%,0.125W	75042	CEAT0-49R90F
R511	316-0104-00			RES.,FXD,CMPSN:100K OHM,10%,0.25W	01121	CB1041
R512	316-0563-00			RES.,FXD,CMPSN:56K OHM,10%,0.25W	01121	CB5631
R516	316-0105-00	B010100	B089999	RES.,FXD,CMPSN:1M OHM,10%,0.25W	01121	CB1051
R516	321-0481-00	B090000		RES.,FXD,FILM:1M OHM,1%,0.125W	75042	CEAT0-1004F
R517	316-0101-00			RES.,FXD,CMPSN:100 OHM,10%,0.25W	01121	CB1011
R518	316-0101-00			RES.,FXD,CMPSN:100 OHM,10%,0.25W	01121	CB1011
R522	316-0101-00			RES.,FXD,CMPSN:100 OHM,10%,0.25W	01121	CB1011
R523	316-0150-00			RES.,FXD,CMPSN:15 OHM,10%,0.25W	01121	CB1501
R524	316-0150-00			RES.,FXD,CMPSN:15 OHM,10%,0.25W	01121	CB1501
R525	316-0101-00			RES.,FXD,CMPSN:100 OHM,10%,0.25W	01121	CB1011
R527	321-0209-00			RES.,FXD,FILM:1.47K OHM,1%,0.125W	75042	CEAT0-1471F
R528	315-0390-00			RES.,FXD,CMPSN:39 OHM,5%,0.25W	01121	CB3905
R529	321-0209-00			RES.,FXD,FILM:1.47K OHM,1%,0.125W	75042	CEAT0-1471F
R530[1]	311-1192-00			RES.,VAR,NONWIR:10K OHM,20%,1W	12637	381-CM39695
R531	316-0681-00			RES.,FXD,CMPSN:680 OHM,10%,0.25W	01121	CB6811
R535	311-1230-00			RES.,VAR,NONWIR:20K OHM,20%,0.50W	80294	3386F-T04-203
R536	315-0202-00			RES.,FXD,CMPSN:2K OHM,5%,0.25W	01121	CB2025
R537	315-0560-00			RES.,FXD,CMPSN:56 OHM,5%,0.25W	01121	CB5605
R538	315-0362-00			RES.,FXD,CMPSN:3.6K OHM,5%,0.25W	01121	CB3625
R539	316-0222-00			RES.,FXD,CMPSN:2.2K OHM,10%,0.25W	01121	CB2221
R540	316-0222-00			RES.,FXD,CMPSN:2.2K OHM,10%,0.25W	01121	CB2221
R541	316-0682-00			RES.,FXD,CMPSN:6.8K OHM,10%,0.25W	01121	CB6821
R542	316-0182-00			RES.,FXD,CMPSN:1.8K OHM,10%,0.25W	01121	CB1821
R544	316-0103-00			RES.,FXD,CMPSN:10K OHM,10%,0.25W	01121	CB1031
R545	311-1230-00			RES.,VAR,NONWIR:20K OHM,20%,0.50W	80294	3386F-T04-203
R546	315-0101-00			RES.,FXD,CMPSN:100 OHM,5%,0.25W	01121	CB1015
R547	315-0101-00			RES.,FXD,CMPSN:100 OHM,5%,0.25W	01121	CB1015
R549	315-0331-00			RES.,FXD,CMPSN:330 OHM,5%,0.25W	01121	CB3315
R550	316-0330-00			RES.,FXD,CMPSN:33 OHM,10%,0.25W	01121	CB3301
R551	323-0305-00			RES.,FXD,FILM:14.7K OHM,1%,0.50W	75042	CECT0-1472F
R552	316-0330-00			RES.,FXD,CMPSN:33 OHM,10%,0.25W	01121	CB3301
R553	316-0153-00			RES.,FXD,CMPSN:15K OHM,10%,0.25W	01121	CB1531
R554	316-0104-00			RES.,FXD,CMPSN:100K OHM,10%,0.25W	01121	CB1041
R555	311-1230-00			RES.,VAR,NONWIR:20K OHM,20%,0.50W	80294	3386F-T04-203
R556	316-0562-00			RES.,FXD,CMPSN:5.6K OHM,10%,0.25W	01121	CB5621
R557	317-0101-00	B010100	B010724	RES.,FXD,CMPSN:100 OHM,5%,0.125W	01121	BB1015
R557	321-0097-00	B010725		RES.,FXD,FILM:100 OHM,1%,0.125W	75042	CEAT0-1000F
R558	321-0258-00			RES.,FXD,FILM:4.75K OHM,1%,0.125W	75042	CEAT0-4751F
R602	316-0470-00			RES.,FXD,CMPSN:47 OHM,10%,0.25W	01121	CB4701
R603	325-0073-00			RES.,FXD,FILM:3.57M OHM,1%,0.50W	80009	325-0073-00
R604	321-0385-00			RES.,FXD,FILM:100K OHM,1%,0.125W	75042	CEAT0-1003F
R606	323-0480-00			RES.,FXD,FILM:976K OHM,1%,0.50W	75042	CECT0-9763F
R607	321-0451-00			RES.,FXD,FILM:487K OHM,1%,0.125W	75042	CEAT0-4873F
R608	315-0200-00	XB120000		RES.,FXD,CMPSN:20 OHM,5%,0.25W	01121	CB2005
R609	316-0102-00	B010100	B010399	RES.,FXD,CMPSN:1K OHM,10%,0.25W	01121	CB1021
R609	316-0274-00	B010400		RES.,FXD,CMPSN:270K OHM,10%,0.25W	01121	CB2741
R611	316-0104-00			RES.,FXD,CMPSN:100K OHM,10%,0.25W	01121	CB1041
R612	316-0563-00			RES.,FXD,CMPSN:56K OHM,10%,0.25W	01121	CB5631
R616	321-0481-00			RES.,FXD,FILM:1M OHM,1%,0.125W	75042	CEAT0-1004F

[1]Furnished as a unit with S530.

Ckt No.	Tektronix Part No.	Serial/Model No. Eff	Dscont	Name & Description	Mfr Code	Mfr Part Number
R617	316-0101-00			RES.,FXD,CMPSN:100 OHM,10%,0.25W	01121	CB1011
R618	316-0101-00			RES.,FXD,CMPSN:100 OHM,10%,0.25W	01121	CB1011
R622	316-0101-00			RES.,FXD,CMPSN:100 OHM,10%,0.25W	01121	CB1011
R623	316-0150-00			RES.,FXD,CMPSN:15 OHM,10%,0.25W	01121	CB1501
R624	316-0150-00			RES.,FXD,CMPSN:15 OHM,10%,0.25W	01121	CB1501
R625	316-0101-00			RES.,FXD,CMPSN:100 OHM,10%,0.25W	01121	CB1011
R627	321-0209-00			RES.,FXD,FILM:1.47K OHM,1%,0.125W	75042	CEAT0-1471F
R628	315-0390-00			RES.,FXD,CMPSN:39 OHM,5%,0.25W	01121	CB3905
R629	321-0209-00			RES.,FXD,FILM:1.47K OHM,1%,0.125W	75042	CEAT0-1471F
R630[1]	311-1192-00			RES.,VAR,NONWIR:10K OHM,20%,1W	12637	381-CM39695
R631	316-0681-00			RES.,FXD,CMPSN:680 OHM,10%,0.25W	01121	CB6811
R635	311-1230-00			RES.,VAR,NONWIR:20K OHM,20%,0.50W	80294	3386F-T04-203
R636	315-0202-00			RES.,FXD,CMPSN:2K OHM,5%,0.25W	01121	CB2025
R637	315-0560-00			RES.,FXD,CMPSN:56 OHM,5%,0.25W	01121	CB5605
R638	315-0362-00			RES.,FXD,CMPSN:3.6K OHM,5%,0.25W	01121	CB3625
R639	316-0222-00			RES.,FXD,CMPSN:2.2K OHM,10%,0.25W	01121	CB2221
R640	316-0222-00			RES.,FXD,CMPSN:2.2K OHM,10%,0.25W	01121	CB2221
R641	316-0682-00			RES.,FXD,CMPSN:6.8K OHM,10%,0.25W	01121	CB6821
R642	316-0182-00			RES.,FXD,CMPSN:1.8K OHM,10%,0.25W	01121	CB1821
R644	316-0103-00			RES.,FXD,CMPSN:10K OHM,10%,0.25W	01121	CB1031
R645	311-1230-00			RES.,VAR,NONWIR:20K OHM,20%,0.50W	80294	3386F-T04-203
R646	315-0101-00			RES.,FXD,CMPSN:100 OHM,5%,0.25W	01121	CB1015
R647	315-0101-00			RES.,FXD,CMPSN:100 OHM,5%,0.25W	01121	CB1015
R649	315-0331-00			RES.,FXD,CMPSN:330 OHM,5%,0.25W	01121	CB3315
R650	316-0330-00			RES.,FXD,CMPSN:33 OHM,10%,0.25W	01121	CB3301
R651	323-0305-00			RES.,FXD,FILM:14.7K OHM,1%,0.50W	75042	CECT0-1472F
R652	316-0330-00			RES.,FXD,CMPSN:33 OHM,10%,0.25W	01121	CB3301
R655	311-1230-00			RES.,VAR,NONWIR:20K OHM,20%,0.50W	80294	3386F-T04-203
R656	316-0562-00			RES.,FXD,CMPSN:5.6K OHM,10%,0.25W	01121	CB5621
R657	317-0101-00	B010100	B010724	RES.,FXD,CMPSN:100 OHM,5%,0.125W	01121	BB1015
R657	321-0097-00	B010725		RES.,FXD,FILM:100 OHM,1%,0.125W	75042	CEAT0-1000F
R658	321-0258-00			RES.,FXD,FILM:4.75K OHM,1%,0.125W	75042	CEAT0-4751F
R671	316-0100-00			RES.,FXD,CMPSN:10 OHM,10%,0.25W	01121	CB1001
R672	315-0680-00			RES.,FXD,CMPSN:68 OHM,5%,0.25W	01121	CB6805
R674	316-0100-00	B010100	B010804X	RES.,FXD,CMPSN:10 OHM,10%,0.25W	01121	CB1001
R674	315-0470-00	XB011200	B119999X	RES.,FXD,CMPSN:47 OHM,5%,0.25W	01121	CB4705
R675	311-1259-00			RES.,VAR,NONWIR:100 OHM,10%,0.50W	80294	3329P-L58-101
R676	315-0430-00	B010100	B069999	RES.,FXD,CMPSN:43 OHM,5%,0.25W	01121	CB4305
R676	315-0510-00	B070000		RES.,FXD,CMPSN:51 OHM,(NOM VALUE),SEL	01121	CB5105
R677	315-0102-00			RES.,FXD,CMPSN:1K OHM,5%,0.25W	01121	CB1025
R678	315-0510-00			RES.,FXD,CMPSN:51 OHM,5%,0.25W	01121	CB5105
R679	315-0120-00			RES.,FXD,CMPSN:12 OHM,5%,0.25W	01121	CB1205
R681	316-0100-00			RES.,FXD,CMPSN:10 OHM,10%,0.25W	01121	CB1001
R682	315-0680-00			RES.,FXD,CMPSN:68 OHM,5%,0.25W	01121	CB6805
R683	315-0471-00			RES.,FXD,CMPSN:470 OHM,5%,0.25W	01121	CB4715
R684	316-0101-00	B010100	B010804X	RES.,FXD,CMPSN:100 OHM,10%,0.25W	01121	CB1011
R687	315-0102-00			RES.,FXD,CMPSN:1K OHM,5%,0.25W	01121	CB1025
R688	315-0510-00			RES.,FXD,CMPSN:51 OHM,5%,0.25W	01121	CB5105
R689	315-0120-00			RES.,FXD,CMPSN:12 OHM,5%,0.25W	01121	CB1205
R690	316-0100-00			RES.,FXD,CMPSN:10 OHM,10%,0.25W	01121	CB1001
R691	316-0104-00			RES.,FXD,CMPSN:100K OHM,10%,0.25W	01121	CB1041
R692	315-0152-00			RES.,FXD,CMPSN:1.5K OHM,5%,0.25W	01121	CB1525
R694	315-0431-00			RES.,FXD,CMPSN:430 OHM,5%,0.25W	01121	CB4315

[1]Furnished as a unit with S630.

Ckt No.	Tektronix Part No.	Serial/Model No. Eff	Dscont	Name & Description	Mfr Code	Mfr Part Number
R697	316-0100-00	B010100	B119999X	RES.,FXD,CMPSN:10 OHM,10%,0.25W	01121	CB1001
R699	316-0100-00	B010100	B119999X	RES.,FXD,CMPSN:10 OHM,10%,0.25W	01121	CB1001
R803	315-0391-00			RES.,FXD,CMPSN:390 OHM,5%,0.25W	01121	CB3915
R804	321-0186-00			RES.,FXD,FILM:845 OHM,1%,0.125W	75042	CEAT0-8450F
R805	316-0220-00			RES.,FXD,CMPSN:22 OHM,10%,0.25W	01121	CB2201
R807	321-0243-00			RES.,FXD,FILM:3.32K OHM,1%,0.125W	75042	CEAT0-3321F
R808	321-0206-00			RES.,FXD,FILM:1.37K OHM,1%,0.125W	75042	CEAT0-1371F
R809	315-0132-00			RES.,FXD,CMPSN:1.3K OHM,5%,0.25W	01121	CB1325
R811	315-0390-00			RES.,FXD,CMPSN:39 OHM,5%,0.25W	01121	CB3905
R812	321-0211-00			RES.,FXD,FILM:1.54K OHM,1%,0.125W	75042	CEAT0-1541F
R814	315-0332-00			RES.,FXD,CMPSN:3.3K OHM,5%,0.25W	01121	CB3325
R815	315-0151-00			RES.,FXD,CMPSN:150 OHM,5%,0.25W	01121	CB1515
R817	315-0681-00			RES.,FXD,CMPSN:680 OHM,5%,0.25W	01121	CB6815
R818	315-0681-00			RES.,FXD,CMPSN:680 OHM,5%,0.25W	01121	CB6815
R822	315-0102-00	B010100	B010599	RES.,FXD,CMPSN:1K OHM,5%,0.25W	01121	CB1025
R822	315-0103-00	B010600		RES.,FXD,CMPSN:10K OHM,5%,0.25W	01121	CB1035
R823	315-0153-00			RES.,FXD,CMPSN:15K OHM,5%,0.25W	01121	CB1535
R824	315-0103-00			RES.,FXD,CMPSN:10K OHM,5%,0.25W	01121	CB1035
R827	315-0102-00			RES.,FXD,CMPSN:1K OHM,5%,0.25W	01121	CB1025
R828	315-0102-00			RES.,FXD,CMPSN:1K OHM,5%,0.25W	01121	CB1025
R829	316-0220-00			RES.,FXD,CMPSN:22 OHM,10%,0.25W	01121	CB2201
R831	315-0102-00			RES.,FXD,CMPSN:1K OHM,5%,0.25W	01121	CB1025
R834	315-0100-00			RES.,FXD,CMPSN:10 OHM,5%,0.25W	01121	CB1005
R836	315-0100-00			RES.,FXD,CMPSN:10 OHM,5%,0.25W	01121	CB1005
R838	316-0101-00			RES.,FXD,CMPSN:100 OHM,10%,0.25W	01121	CB1011
R853	315-0471-00			RES.,FXD,CMPSN:470 OHM,5%,0.25W	01121	CB4715
R854	321-0200-00			RES.,FXD,FILM:1.18K OHM,1%,0.125W	75042	CEAT0-1181F
R855	316-0220-00			RES.,FXD,CMPSN:22 OHM,10%,0.25W	01121	CB2201
R856	316-0270-00			RES.,FXD,CMPSN:27 OHM,10%,0.25W	01121	CB2701
R857	321-0243-00			RES.,FXD,FILM:3.32K OHM,1%,0.125W	75042	CEAT0-3321F
R858	321-0201-00			RES.,FXD,FILM:1.21K OHM,1%,0.125W	75042	CEAT0-1211F
R859	315-0132-00			RES.,FXD,CMPSN:1.3K OHM,5%,0.25W	01121	CB1325
R861	315-0390-00			RES.,FXD,CMPSN:39 OHM,5%,0.25W	01121	CB3905
R862	321-0211-00	B010100	B010599	RES.,FXD,FILM:1.54K OHM,1%,0.125W	75042	CEAT0-1541F
R862	321-0209-00	B010600		RES.,FXD,FILM:1.47K OHM,1%,0.125W	75042	CEAT0-1471F
R863	315-0103-00	XB010600		RES.,FXD,CMPSN:10K OHM,5%,0.25W	01121	CB1035
R864	315-0332-00			RES.,FXD,CMPSN:3.3K OHM,5%,0.25W	01121	CB3325
R865	315-0151-00			RES.,FXD,CMPSN:150 OHM,5%,0.25W	01121	CB1515
R866	315-0471-00			RES.,FXD,CMPSN:470 OHM,5%,0.25W	01121	CB4715
R871	315-0472-00			RES.,FXD,CMPSN:4.7K OHM,5%,0.25W	01121	CB4725
R872	315-0241-00			RES.,FXD,CMPSN:240 OHM,5%,0.25W	01121	CB2415
R877	315-0102-00			RES.,FXD,CMPSN:1K OHM,5%,0.25W	01121	CB1025
R879	315-0274-00			RES.,FXD,CMPSN:270K OHM,5%,0.25W	01121	CB2745
R1001	315-0360-00			RES.,FXD,CMPSN:36 OHM,5%,0.25W	01121	CB3605
R1002	303-0432-00			RES.,FXD,CMPSN:4.3K OHM,5%,1W	01121	GB4325
R1003	316-0101-00			RES.,FXD,CMPSN:100 OHM,10%,0.25W	01121	CB1011
R1004	315-0360-00			RES.,FXD,CMPSN:36 OHM,5%,0.25W	01121	CB3605
R1005	316-0220-00			RES.,FXD,CMPSN:22 OHM,10%,0.25W	01121	CB2201
R1006	308-0421-00			RES.,FXD,WW:3K OHM,5%,3W	63743	36216
R1011	316-0103-00			RES.,FXD,CMPSN:10K OHM,10%,0.25W	01121	CB1031
R1012	321-0164-00			RES.,FXD,FILM:499 OHM,1%,0.125W	75042	CEAT0-4990F
R1013	321-0228-00			RES.,FXD,FILM:2.32K OHM,1%,0.125W	75042	CEAT0-2321F
R1016	321-0195-00			RES.,FXD,FILM:1.05K OHM,1%,0.125W	75042	CEAT0-1051F

Ckt No.	Tektronix Part No.	Serial/Model No. Eff	Dscont	Name & Description	Mfr Code	Mfr Part Number
R1017	321-0250-00			RES.,FXD,FILM:3.92K OHM,1%,0.125W	75042	CEAT0-3921F
R1021	321-0193-00			RES.,FXD,FILM:1K OHM,1%,0.125W	75042	CEAT0-1001F
R1022	321-0193-00			RES.,FXD,FILM:1K OHM,1%,0.125W	75042	CEAT0-1001F
R1024	321-0165-00			RES.,FXD,FILM:511 OHM,1%,0.125W	75042	CEAT0-5110F
R1026	316-0181-00			RES.,FXD,CMPSN:180 OHM,10%,0.25W	01121	CB1811
R1029	316-0101-00			RES.,FXD,CMPSN:100 OHM,10%,0.25W	01121	CB1011
R1031	316-0470-00			RES.,FXD,CMPSN:47 OHM,10%,0.25W	01121	CB4701
R1032	316-0101-00			RES.,FXD,CMPSN:100 OHM,10%,0.25W	01121	CB1011
R1033	321-0256-00			RES.,FXD,FILM:4.53K OHM,1%,0.125W	75042	CEAT0-4531F
R1035	316-0101-00			RES.,FXD,CMPSN:100 OHM,10%,0.25W	01121	CB1011
R1037	321-0251-01			RES.,FXD,FILM:4.02K OHM,0.5%,0.125W	75042	CEAT0-4021F
R1038	316-0470-00			RES.,FXD,CMPSN:47 OHM,10%,0.25W	01121	CB4701
R1039	321-0228-00			RES.,FXD,FILM:2.32K OHM,1%,0.125W	75042	CEAT0-2321F
R1041	316-0101-00			RES.,FXD,CMPSN:100 OHM,10%,0.25W	01121	CB1011
R1044	321-0227-00			RES.,FXD,FILM:2.26K OHM,1%,0.125W	75042	CEAT0-2261F
R1045	316-0101-00			RES.,FXD,CMPSN:100 OHM,10%,0.25W	01121	CB1011
R1046	316-0562-00	B010100	B010599	RES.,FXD,CMPSN:5.6K OHM,10%,0.25W	01121	CB5621
R1046	301-0562-00	B010600		RES.,FXD,CMPSN:5.6K OHM,5%,0.50W	01121	EB5625
R1047	316-0681-00	B010100	B010599	RES.,FXD,CMPSN:680 OHM,10%,0.25W	01121	CB6811
R1047	315-0681-00	B010600		RES.,FXD,CMPSN:680 OHM,5%,0.25W	01121	CB6815
R1048	315-0752-00			RES.,FXD,CMPSN:7.5K OHM,5%,0.25W	01121	CB7525
R1049	316-0681-00	B010100	B010599	RES.,FXD,CMPSN:680 OHM,10%,0.25W	01121	CB6811
R1049	315-0681-00	B010600		RES.,FXD,CMPSN:680 OHM,5%,0.25W	01121	CB6815
R1052	315-0561-00			RES.,FXD,CMPSN:560 OHM,5%,0.25W	01121	CB5615
R1053	315-0622-00	B010100	B010599	RES.,FXD,CMPSN:6.2K OHM,5%,0.25W	01121	CB6225
R1053	301-0622-00	B010600		RES.,FXD,CMPSN:6.2K OHM,5%,0.50W	01121	EB6225
R1054	316-0102-00	B010100	B010599	RES.,FXD,CMPSN:1K OHM,10%,0.25W	01121	CB1021
R1054	315-0102-00	B010600		RES.,FXD,CMPSN:1K OHM,5%,0.25W	01121	CB1025
R1057	316-0562-00	B010100	B010599	RES.,FXD,CMPSN:5.6K OHM,10%,0.25W	01121	CB5621
R1057	315-0562-00	B010600		RES.,FXD,CMPSN:5.6K OHM,5%,0.25W	01121	CB5625
R1061	315-0360-00			RES.,FXD,CMPSN:36 OHM,5%,0.25W	01121	CB3605
R1062	301-0432-00			RES.,FXD,CMPSN:4.3K OHM,5%,0.50W	01121	EB4325
R1063	316-0101-00			RES.,FXD,CMPSN:100 OHM,10%,0.25W	01121	CB1011
R1064	315-0360-00			RES.,FXD,CMPSN:36 OHM,5%,0.25W	01121	CB3605
R1065	316-0220-00			RES.,FXD,CMPSN:22 OHM,10%,0.25W	01121	CB2201
R1066	308-0421-00			RES.,FXD,WW:3K OHM,5%,3W	63743	36216
R1071	316-0103-00			RES.,FXD,CMPSN:10K OHM,10%,0.25W	01121	CB1031
R1072	321-0164-00			RES.,FXD,FILM:499 OHM,1%,0.125W	75042	CEAT0-4990F
R1073	321-0228-00			RES.,FXD,FILM:2.32K OHM,1%,0.125W	75042	CEAT0-2321F
R1076	321-0195-00			RES.,FXD,FILM:1.05K OHM,1%,0.125W	75042	CEAT0-1051F
R1077	321-0250-00			RES.,FXD,FILM:3.92K OHM,1%,0.125W	75042	CEAT0-3921F
R1081	321-0193-00			RES.,FXD,FILM:1K OHM,1%,0.125W	75042	CEAT0-1001F
R1082	321-0193-00			RES.,FXD,FILM:1K OHM,1%,0.125W	75042	CEAT0-1001F
R1084	321-0165-00			RES.,FXD,FILM:511 OHM,1%,0.125W	75042	CEAT0-5110F
R1086	316-0181-00			RES.,FXD,CMPSN:180 OHM,10%,0.25W	01121	CB1811
R1089	316-0101-00			RES.,FXD,CMPSN:100 OHM,10%,0.25W	01121	CB1011
R1091	316-0470-00			RES.,FXD,CMPSN:47 OHM,10%,0.25W	01121	CB4701
R1092	316-0101-00			RES.,FXD,CMPSN:100 OHM,10%,0.25W	01121	CB1011
R1093	321-0256-00			RES.,FXD,FILM:4.53K OHM,1%,0.125W	75042	CEAT0-4531F
R1095	316-0101-00			RES.,FXD,CMPSN:100 OHM,10%,0.25W	01121	CB1011
R1097	321-0251-01			RES.,FXD,FILM:4.02K OHM,0.5%,0.125W	75042	CEAT0-4021F
R1098	321-0229-00			RES.,FXD,FILM:2.37K OHM,1%,0.125W	75042	CEAT0-2371F
R1101	315-0682-00			RES.,FXD,CMPSN:6.8K OHM,5%,0.25W	01121	CB6825

Ckt No.	Tektronix Part No.	Serial/Model No. Eff	Dscont	Name & Description	Mfr Code	Mfr Part Number
R1110	311-1464-00			RES.,VAR,WW:2K OHM,5%,2W	02111	534-264
R1111	321-0169-00			RES.,FXD,FILM:562 OHM,1%,0.125W	75042	CEAT0-5620F
R1112	321-0068-00			RES.,FXD,FILM:49.9 OHM,1%,0.125W	75042	CEAT0-49R90F
R1113	321-0125-00			RES.,FXD,FILM:196 OHM,1%,0.125W	75042	CEAT0-1960F
R1115	311-1244-00			RES.,VAR,NONWIR:100 OHM,10%,0.50W	80294	3386X-T07-101
R1117	321-0231-00			RES.,FXD,FILM:2.49K OHM,1%,0.125W	75042	CEAT0-2491F
R1131	323-0498-04			RES.,FXD,FILM:1.5M OHM,0.1%,0.50W	91637	MFF1226D15003B
R1133	323-0481-04			RES.,FXD,FILM:1M OHM,0.1%,0.50W	91637	MFF1226D10003B
R1134	321-0648-04			RES.,FXD,FILM:500K OHM,0.1%,0.125W	91637	MFF1816D50002B
R1135	321-0618-04			RES.,FXD,FILM:250K OHM,0.1%,0.125W	91637	MFF1816D25002B
R1136	321-0414-04			RES.,FXD,FILM:200K OHM,0.1%,0.125W	91637	MFF1816D20002B
R1137	321-0385-04			RES.,FXD,FILM:100K OHM,0.1%,0.125W	91637	MFF1816D10002B
R1138	321-0756-04			RES.,FXD,FILM:50K OHM,0.1%,0.125W	75042	CEAT2-5002B
R1140[1]	311-1374-00			RES.,VAR,NONWIR:50K OHM,20%,1W	01121	10M329A
R1141	315-0154-00			RES.,FXD,CMPSN:150K OHM,5%,0.25W	01121	CB1545
R1145	311-1245-00			RES.,VAR,NONWIR:10K OHM,10%,0.50W	73138	72X-28-0-103K
R1146	315-0472-00			RES.,FXD,CMPSN:4.7K OHM,5%,0.25W	01121	CB4725
R1151	321-0429-00			RES.,FXD,FILM:287K OHM,1%,0.125W	75042	CEAT0-2873F
R1153	321-0338-00			RES.,FXD,FILM:32.4K OHM,1%,0.125W	75042	CEAT0-3242F
R1155[2]	311-1410-00			RES.,VAR,NONWIR:25K OHM,20%,1W	80009	311-1410-00
R1161	323-0498-04			RES.,FXD,FILM:1.5M OHM,0.1%,0.50W	91637	MFF1226D15003B
R1163	323-0481-04			RES.,FXD,FILM:1M OHM,0.1%,0.50W	91637	MFF1226D10003B
R1164	321-0648-04			RES.,FXD,FILM:500K OHM,0.1%,0.125W	91637	MFF1816D50002B
R1165	321-0618-04			RES.,FXD,FILM:250K OHM,0.1%,0.125W	91637	MFF1816D25002B
R1166	321-0414-04			RES.,FXD,FILM:200K OHM,0.1%,0.125W	91637	MFF1816D20002B
R1167	321-0385-04			RES.,FXD,FILM:100K OHM,0.1%,0.125W	91637	MFF1816D10002B
R1168	321-0756-04			RES.,FXD,FILM:50K OHM,0.1%,0.125W	75042	CEAT2-5002B
R1170	315-0473-00			RES.,FXD,CMPSN:47K OHM,5%,0.25W	01121	CB4735
R1175	311-1245-00			RES.,VAR,NONWIR:10K OHM,10%,0.50W	73138	72X-28-0-103K
R1201	316-0471-00			RES.,FXD,CMPSN:470 OHM,10%,0.25W	01121	CB4711
R1202	321-0212-00			RES.,FXD,FILM:1.58K OHM,1%,0.125W	75042	CEAT0-1581F
R1205A,B	311-1430-00			RES.,VAR,NONWIR:5K OHM X 50K OHM,20%,0.50W	01121	10M457
R1206	315-0202-00			RES.,FXD,CMPSN:2K OHM,5%,0.25W	01121	CB2025
R1207	315-0203-00			RES.,FXD,CMPSN:20K OHM,5%,0.25W	01121	CB2035
R1208	315-0432-00			RES.,FXD,CMPSN:4.3K OHM,5%,0.25W	01121	CB4325
R1209	315-0433-00			RES.,FXD,CMPSN:43K OHM,5%,0.25W	01121	CB4335
R1211	321-0130-00			RES.,FXD,FILM:221 OHM,1%,0.125W	75042	CEAT0-2210F
R1212	316-0102-00			RES.,FXD,CMPSN:1K OHM,10%,0.25W	01121	CB1021
R1214	321-0174-00			RES.,FXD,FILM:634 OHM,1%,0.125W	75042	CEAT0-6340F
R1215	311-1222-00			RES.,VAR,NONWIR:100 OHM,20%,0.50W	80294	3386F-T04-101
R1216	321-0264-00			RES.,FXD,FILM:5.49K OHM,1%,0.125W	75042	CEAT0-5491F
R1217	321-0147-00			RES.,FXD,FILM:332 OHM,1%,0.125W	75042	CEAT0-3320F
R1218	315-0152-00	XB080000		RES.,FXD,CMPSN:1.5K OHM,5%,0.25W	01121	CB1525
R1219	321-0164-00			RES.,FXD,FILM:499 OHM,1%,0.125W	75042	CEAT0-4990F
R1220	321-0034-00			RES.,FXD,FILM:22.1 OHM,1%,0.125W	75042	CEAT0-22R10F
R1221	321-0173-00			RES.,FXD,FILM:619 OHM,1%,0.125W	75042	CEAT0-6190F
R1222	321-0173-00			RES.,FXD,FILM:619 OHM,1%,0.125W	75042	CEAT0-6190F
R1223	321-0184-00			RES.,FXD,FILM:806 OHM,1%,0.125W	75042	CEAT0-8060F
R1224	323-0248-00			RES.,FXD,FILM:3.74K OHM,1%,0.50W	75042	CECT0-3741F
R1225	311-1226-00			RES.,VAR,NONWIR:2.5K OHM,20%,0.50W	80294	3386F-T04-252
R1226	323-0296-00			RES.,FXD,FILM:11.8K OHM,1%,0.50W	75042	CECT0-1182F
R1228	321-0210-00			RES.,FXD,FILM:1.5K OHM,1%,0.125W	75042	CEAT0-1501F
R1229	316-0154-00			RES.,FXD,CMPSN:150K OHM,10%,0.25W	01121	CB1541

[1]Furnished as a unit with S1140
[2]Furnished as a unit with S1155A,B

Ckt No.	Tektronix Part No.	Serial/Model No. Eff	Dscont	Name & Description	Mfr Code	Mfr Part Number
R1231	321-0222-00			RES.,FXD,FILM:2K OHM,1%,0.125W	75042	CEAT0-2001F
R1232	315-0270-00			RES.,FXD,CMPSN:27 OHM,5%,0.25W	01121	CB2705
R1233	321-0184-00			RES.,FXD,FILM:806 OHM,1%,0.125W	75042	CEAT0-8060F
R1234	323-0248-00			RES.,FXD,FILM:3.74K OHM,1%,0.50W	75042	CECT0-3741F
R1235	323-0191-00			RES.,FXD,FILM:953 OHM,1%,0.50W	75042	CECT0-9530F
R1236	323-0296-00			RES.,FXD,FILM:11.8K OHM,1%,0.50W	75042	CECT0-1182F
R1237	311-1225-00			RES.,VAR,NONWIR:1K OHM,20%,0.50W	80294	3386F-T04-102
R1238	311-1222-00			RES.,VAR,NONWIR:100 OHM,20%,0.50W	80294	3386F-T04-101
R1239	321-0110-00			RES.,FXD,FILM:137 OHM,1%,0.125W	75042	CEAT0-1370F
R1241	321-0168-00			RES.,FXD,FILM:549 OHM,1%,0.125W	75042	CEAT0-5490F
R1242	321-0168-00			RES.,FXD,FILM:549 OHM,1%,0.125W	75042	CEAT0-5490F
R1244	321-0122-00			RES.,FXD,FILM:182 OHM,1%,0.125W	75042	CEAT0-1820F
R1246	321-0260-00			RES.,FXD,FILM:4.99K OHM,1%,0.125W	75042	CEAT0-4991F
R1247	315-0201-00			RES.,FXD,CMPSN:200 OHM,5%,0.25W	01121	CB2015
R1248	321-0228-00			RES.,FXD,FILM:2.32K OHM,1%,0.125W	75042	CEAT0-2321F
R1249	315-0182-00			RES.,FXD,CMPSN:1.8K OHM,5%,0.25W	01121	CB1825
R1253	321-0299-00			RES.,FXD,FILM:12.7K OHM,1%,0.125W	75042	CEAT0-1272F
R1254	321-0140-00			RES.,FXD,FILM:280 OHM,1%,0.125W	75042	CEAT0-2800F
R1255	302-0181-00			RES.,FXD,CMPSN:180 OHM,10%,0.50W	01121	EB1811
R1260	322-0289-00			RES.,FXD,FILM:10K OHM,1%,0.25W	75042	CEBT0-1002F
R1261	322-0289-00			RES.,FXD,FILM:10K OHM,1%,0.25W	75042	CEBT0-1002F
R1262	321-0189-00			RES.,FXD,FILM:909 OHM,1%,0.125W	75042	CEAT0-9090F
R1263	316-0470-00			RES.,FXD,CMPSN:47 OHM,10%,0.25W	01121	CB4701
R1264	302-0393-00			RES.,FXD,CMPSN:39K OHM,10%,0.50W	01121	EB3931
R1266	316-0101-00			RES.,FXD,CMPSN:100 OHM,10%,0.25W	01121	CB1011
R1268	321-0222-00			RES.,FXD,FILM:2K OHM,1%,0.125W	75042	CEAT0-2001F
R1269	321-0268-00			RES.,FXD,FILM:6.04K OHM,1%,0.125W	75042	CEAT0-6041F
R1273	321-0299-00			RES.,FXD,FILM:12.7K OHM,1%,0.125W	75042	CEAT0-1272F
R1274	323-0177-00			RES.,FXD,FILM:680 OHM,1%,0.50W	75042	CECT0-6810F
R1275	302-0221-00			RES.,FXD,CMPSN:220 OHM,10%,0.50W	01121	EB2211
R1280	322-0289-00			RES.,FXD,FILM:10K OHM,1%,0.25W	75042	CEBT0-1002F
R1281	322-0289-00			RES.,FXD,FILM:10K OHM,1%,0.25W	75042	CEBT0-1002F
R1282	321-0189-00			RES.,FXD,FILM:909 OHM,1%,0.125W	75042	CEAT0-9090F
R1283	316-0470-00			RES.,FXD,CMPSN:47 OHM,10%,0.25W	01121	CB4701
R1284	302-0393-00			RES.,FXD,CMPSN:39K OHM,10%,0.50W	01121	EB3931
R1286	316-0101-00			RES.,FXD,CMPSN:100 OHM,10%,0.25W	01121	CB1011
R1288	316-0470-00			RES.,FXD,CMPSN:47 OHM,10%,0.25W	01121	CB4701
R1289	302-0273-00			RES.,FXD,CMPSN:27K OHM,10%,0.50W	01121	EB2731
R1301	321-0160-00			RES.,FXD,FILM:453 OHM,1%,0.125W	75042	CEAT0-4530F
R1302	321-0160-00			RES.,FXD,FILM:453 OHM,1%,0.125W	75042	CEAT0-4530F
R1303	321-0209-00			RES.,FXD,FILM:1.47K OHM,1%,0.125W	75042	CEAT0-1471F
R1304	315-0472-00			RES.,FXD,CMPSN:4.7K OHM,5%,0.25W	01121	CB4725
R1306	315-0112-00			RES.,FXD,CMPSN:1.1K OHM,5%,0.25W	01121	CB1125
R1307	321-0192-00			RES.,FXD,FILM:976 OHM,1%,0.125W	75042	CEAT0-9760F
R1308	321-0171-00			RES.,FXD,FILM:590 OHM,1%,0.125W	75042	CEAT0-5900F
R1314	315-0182-00	B010100	B010151	RES.,FXD,CMPSN:1.8K OHM,5%,0.25W	01121	CB1825
R1314	315-0911-00	B010152		RES.,FXD,CMPSN:910 OHM,5%,0.25W	01121	CB9115
R1315	315-0221-00			RES.,FXD,CMPSN:220 OHM,5%,0.25W	01121	CB2215
R1317	301-0221-00	B010100	B010151	RES.,FXD,CMPSN:220 OHM,5%,0.50W	01121	EB2215
R1317	301-0471-00	B010152		RES.,FXD,CMPSN:470 OHM,5%,0.50W	01121	EB4715
R1321	321-0160-00			RES.,FXD,FILM:453 OHM,1%,0.125W	75042	CEAT0-4530F
R1322	321-0160-00			RES.,FXD,FILM:453 OHM,1%,0.125W	75042	CEAT0-4530F
R1323	321-0209-00			RES.,FXD,FILM:1.47K OHM,1%,0.125W	75042	CEAT0-1471F

For Service Manuals
MAURITRON SERVICES
8 Cherry Tree Road, Chinnor
Oxfordshire, OX9 4QY.
Tel (01844) 351694
Fax (01844) 352554
email:- mauritron@dial.pipex.com

Ckt No.	Tektronix Part No.	Serial/Model No. Eff	Dscont	Name & Description	Mfr Code	Mfr Part Number
R1324	315-0472-00			RES.,FXD,CMPSN:4.7K OHM,5%,0.25W	01121	CB4725
R1326	315-0112-00			RES.,FXD,CMPSN:1.1K OHM,5%,0.25W	01121	CB1125
R1327	321-0192-00			RES.,FXD,FILM:976 OHM,1%,0.125W	75042	CEAT0-9760F
R1328	321-0171-00			RES.,FXD,FILM:590 OHM,1%,0.125W	75042	CEAT0-5900F
R1334	315-0182-00	B010100	B010151	RES.,FXD,CMPSN:1.8K OHM,5%,0.25W	01121	CB1825
R1334	315-0911-00	B010152		RES.,FXD,CMPSN:910 OHM,5%,0.25W	01121	CB9115
R1335	315-0221-00	XB090000		RES.,FXD,CMPSN:220 OHM,5%,0.25W	01121	CB2215
R1337	301-0221-00	B010100	B010151	RES.,FXD,CMPSN:220 OHM,5%,0.50W	01121	EB2215
R1337	301-0471-00	B010152		RES.,FXD,CMPSN:470 OHM,5%,0.50W	01121	EB4715
R1339	316-0220-00			RES.,FXD,CMPSN:22 OHM,10%,0.25W	01121	CB2201
R1345	315-0202-00			RES.,FXD,CMPSN:2K OHM,5%,0.25W	01121	CB2025
R1348	316-0220-00			RES.,FXD,CMPSN:22 OHM,10%,0.25W	01121	CB2201
R1349	316-0220-00			RES.,FXD,CMPSN:22 OHM,10%,0.25W	01121	CB2201
R1400	311-1228-00			RES.,VAR,NONWIR:10K OHM,20%,0.50W	80294	3386F-T04-103
R1401	322-0464-00			RES.,FXD,FILM:665K OHM,1%,0.25W	75042	CEBT0-6653F
R1402	316-0224-00			RES.,FXD,CMPSN:220K OHM,10%,0.25W	01121	CB2241
R1403	315-0273-00			RES.,FXD,CMPSN:27K OHM,5%,0.25W	01121	CB2735
R1404	315-0103-00			RES.,FXD,CMPSN:10K OHM,5%,0.25W	01121	CB1035
R1406	316-0683-00			RES.,FXD,CMPSN:68K OHM,10%,0.25W	01121	CB6831
R1407	316-0102-00			RES.,FXD,CMPSN:1K OHM,10%,0.25W	01121	CB1021
R1408	315-0242-00			RES.,FXD,CMPSN:2.4K OHM,5%,0.25W	01121	CB2425
R1409	316-0104-00			RES.,FXD,CMPSN:100K OHM,10%,0.25W	01121	CB1041
R1411	321-0327-00			RES.,FXD,FILM:24.9K OHM,1%,0.125W	75042	CEAT0-2492F
R1412	321-0329-00			RES.,FXD,FILM:26.1K OHM,1%,0.125W	75042	CEAT0-2612F
R1413	316-0103-00			RES.,FXD,CMPSN:10K OHM,10%,0.25W	01121	CB1031
R1414	316-0392-00			RES.,FXD,CMPSN:3.9K OHM,10%,025W	01121	CB3921
R1416	316-0472-00			RES.,FXD,CMPSN:4.7K OHM,10%,0.25W	01121	CB4721
R1420	315-0394-00			RES.,FXD,CMPSN:390K OHM,5%,0.25W	01121	CB3945
R1421	316-0103-00			RES.,FXD,CMPSN:10K OHM,10%,0.25W	01121	CB1031
R1422	316-0103-00			RES.,FXD,CMPSN:10K OHM,10%,0.25W	01121	CB1031
R1423	316-0103-00			RES.,FXD,CMPSN:10K OHM,10%,0.25W	01121	CB1031
R1427	316-0106-00	XB080000		RES.,FXD,COMP:10M OHM,10%,0.25W	01121	CB1061
R1428	315-0182-00	XB130000		RES.,FXD,COMP:1.8K OHM,5%,0.25W	01121	CB1825
R1430	311-0075-00			RES.,VAR,NONWIR:5M OHM,20%	12697	CM16993
R1431A				RES.,FXD,FILM:6.57M OHM		
R1431B				RES.,FXD,FILM:23.6M OHM		
R1431C	307-0290-04			RES.,FXD,FILM:550K OHM	80009	307-0290-04
R1431D				RES.,FXD,FILM:24.5M OHM		
R1440	311-1313-00			RES.,VAR,NONWIR:2K OHM,20%,1W	01121	10M157A
R1441	302-0562-00	B010100	B079999X	RES.,FXD,CMPSN:5.6K OHM,10%,0.50W	01121	EB5621
R1442	311-1235-00			RES.,VAR,NONWIR:100K OHM,20%,0.50W	80294	3386F-T04-104
R1445	311-1372-00			RES.,VAR,NONWIR:100K OHM,20%,1W	01121	10M335A
R1446	311-1227-00			RES.,VAR,NONWIR:5K OHM,20%,0.50W	80294	3386F-T04-502
R1447	315-0223-00			RES.,FXD,CMPSN:22K OHM,5%,0.25W	01121	CB2235
R1448	315-0243-00	B010100	B109999	RES.,FXD,CMPSN:24K OHM,5%,0.25W	01121	CB2435
R1448	315-0183-00	B110000		RES.,FXD,CMPSN:18K OHM,5%,0.25W	01121	CB1835
R1449	316-0101-00			RES.,FXD,CMPSN:100 OHM,10%,0.25W	01121	CB1011
R1451	301-0243-00			RES.,FXD,CMPSN:24K OHM,5%,0.50W	01121	EB2435
R1452	316-0221-00			RES.,FXD,CMPSN:220 OHM,10%,0.25W	01121	CB2211
R1453	316-0470-00			RES.,FXD,CMPSN:47 OHM,10%,0.25W	01121	CB4701
R1460	311-1373-00	B010100	B079999	RES.,VAR,NONWIR:5K OHM,20%,1W	01121	10M336A
R1460A,B	311-1538-00	B080000		RES.,VAR,NONWIR:5K OHM X 2.5M OHM,10%	01121	11M518
R1461	315-0302-00			RES.,FXD,CMPSN:3K OHM,5%,0.25W	01121	CB3025

Ckt No.	Tektronix Part No.	Serial/Model No. Eff	Dscont	Name & Description	Mfr Code	Mfr Part Number
R1462	315-0242-00			RES.,FXD,CMPSN:2.4K OHM,5%,0.25W	01121	CB2425
R1463	315-0122-00			RES.,FXD,CMPSN:1.2K OHM,5%,0.25W	01121	CB1225
R1464	315-0153-00			RES.,FXD,CMPSN:15K OHM,5%,0.25W	01121	CB1535
R1466	321-0220-00			RES.,FXD,FILM:1.91K OHM,1%,0.125W	75042	CEAT0-1911F
R1467	321-0168-00			RES.,FXD,FILM:549 OHM,1%,0.125W	75042	CEAT0-5490F
R1468	321-0249-00			RES.,FXD,FILM:3.83K OHM,1%,0.125W	75042	CEAT0-3831F
R1469	323-0322-00			RES.,FXD,FILM:22.1K OHM,1%,0.5W	75042	CECT0-2212F
R1470	321-0307-00			RES.,FXD,FILM:15.4K OHM,1%,0.125W	75042	CEAT0-1542F
R1471	316-0101-00			RES.,FXD,CMPSN:100 OHM,10%,0.25W	01121	CB1011
R1472	316-0391-00			RES.,FXD,CMPSN:390 OHM,10%,0.25W	01121	CB3911
R1473	316-0102-00			RES.,FXD,CMPSN:1K OHM,10%,0.25W	01121	CB1021
R1474	316-0101-00			RES.,FXD,CMPSN:100 OHM,10%,0.25W	01121	CB1011
R1475	316-0102-00			RES.,FXD,CMPSN:1K OHM,10%,0.25W	01121	CB1021
R1476	315-0911-00			RES.,FXD,CMPSN:910 OHM,5%,0.25W	01121	CB9115
R1477	321-0201-00			RES.,FXD,FILM:1.21K OHM,1%,0.125W	75042	CEAT0-1211F
R1478	302-0393-00			RES.,FXD,CMPSN:39K OHM,10%,0.50W	01121	EB3931
R1480	311-1231-00			RES.,VAR,NONWIR:25K OHM,20%,0.50W	80294	3386F-T04-253
R1481	316-0103-00			RES.,FXD,CMPSN:10K OHM,10%,0.25W	01121	CB1031
R1482	316-0102-00			RES.,FXD,CMPSN:1K OHM,10%,0.25W	01121	CB1021
R1484	316-0471-00			RES.,FXD,CMPSN:470 OHM,10%,0.25W	01121	CB4711
R1485	316-0221-00			RES.,FXD,CMPSN:220 OHM,10%,0.25W	01121	CB2211
R1486	316-0226-00			RES.,FXD,CMPSN:22M OHM,10%,0.25W	01121	CB2261
R1488	316-0102-00			RES.,FXD,CMPSN:1K OHM,10%,0.25W	01121	CB1021
R1510	316-0103-00	XB010400		RES.,FXD,CMPSN:10K OHM,10%,0.25W	01121	CB1031
R1511	315-0184-00	B010100	B010399	RES.,FXD,CMPSN:180K OHM,5%,0.25W	01121	CB1845
R1511	316-0103-00	B010400		RES.,FXD,CMPSN:10K OHM,10%,0.25W	01121	CB1031
R1512	316-0472-00	XB010400	B079999X	RES.,FXD,CMPSN:4.7K OHM,10%,0.25W	01121	CB4721
R1513	315-0222-00	B010100	B079999X	RES.,FXD,CMPSN:2.2K OHM,5%,0.25W	01121	CB2225
R1515	315-0102-00	B010100	B079999X	RES.,FXD,CMPSN:1K OHM,5%,0.25W	01121	CB1025
R1516	315-0102-00	B010100	B079999	RES.,FXD,CMPSN:1K OHM,5%,0.25W	01121	CB1025
R1516	308-0363-00	B080000		RES.,FXD,WW:3K OHM,5%,8W	91637	RS8-B30000F
R1517	315-0200-00	XB080000		RES.,FXD,CMPSN:20 OHM,5%,0.25W	01121	CB2005
R1518	303-0203-00	XB080000		RES.,FXD,CMPSN:20K OHM,5%,1W	01121	GB2035
R1519	315-0101-00	XB080000		RES.,FXD,CMPSN:100 OHM,5%,0.25W	01121	CB1015
R1521	323-0269-00			RES.,FXD,FILM:6.19K OHM,1%,0.50W	75042	CECT0-6191F
R1523	321-0292-00			RES.,FXD,FILM:10.7K OHM,1%,0.125W	75042	CEAT0-1072F
R1524	315-0202-00	B010100	B109999X	RES.,FXD,CMPSN:2K OHM,5%,0.25W	01121	CB2025
R1524	303-0472-00	XB160000		RES.,FXD,COMP:4.7K OHM,5%,1W	01121	GB4725
R1525	316-0102-00	XB011052		RES.,FXD,COMP:1K OHM,10%,0.25W	01121	CB1021
R1527	315-0183-00			RES.,FXD,CMPSN:18K OHM,5%,0.25W	01121	CB1835
R1528	303-0223-00			RES.,FXD,CMPSN:22K OHM,5%,1W	01121	GB2235
R1532	315-0122-00			RES.,FXD,CMPSN:1.2K OHM,5%,0.25W	01121	CB1225
R1533	315-0563-00			RES.,FXD,CMPSN:56K OHM,5%,0.25W	01121	CB5635
R1534	307-0052-00			RES.,FXD,CMPSN:3 OHM,5%,0.50W	01121	EB30G5
R1537	321-0366-00			RES.,FXD,FILM:63.4K OHM,1%,0.125W	75042	CEAT0-6342F
R1538	311-1226-00			RES.,VAR,NONWIR:2.5K OHM,20%,0.50W	80294	3386F-T04-252
R1539	321-0296-00			RES.,FXD,FILM:11.8K OHM,1%,0.125W	75042	CEAT0-1182F
R1543	321-0966-03			RES.,FXD,FILM:40K OHM,0.25%,0.125W	75042	CEAT2-4002C
R1544	321-0603-00			RES.,FXD,FILM:15K OHM,0.25%,0.125W	75042	CEAT2-1502C
R1546	315-0102-00			RES.,FXD,CMPSN:1K OHM,5%,0.25W	01121	CB1025
R1547	315-0153-00			RES.,FXD,CMPSN:15K OHM,5%,0.25W	01121	CB1535
R1549	308-0459-00			RES.,FXD,WW:1.1 OHM,5%,3W	91637	RS2B-D1R100J
R1553	321-0775-03			RES.,FXD,FILM:45K OHM,0.25%,0.125W	75042	CEAT2-4502C

Ckt No.	Tektronix Part No.	Serial/Model No. Eff	Dscont	Name & Description	Mfr Code	Mfr Part Number
R1554	321-0774-03			RES.,FXD,FILM:4.5K OHM,0.25%,0.125W	75042	CEAT2-4501C
R1556	315-0102-00			RES.,FXD,CMPSN:1K OHM,5%,0.25W	01121	CB1025
R1557	315-0512-00			RES.,FXD,CMPSN:5.1K OHM,5%,0.25W	01121	CB5125
R1559	307-0093-00			RES.,FXD,CMPSN:1.2 OHM,5%,0.50W	01121	EB12G5
R1563	321-0274-00			RES.,FXD,FILM:6.98K OHM,1%,0.125W	75042	CEAT0-6981F
R1564	321-0967-03			RES.,FXD,FILM:55K OHM,0.25%,0.125W	91637	MFF1816D55001C
R1565	321-0962-03			RES.,FXD,FILM:8K OHM,0.25%,0.125W	91637	MFF1816D80000C
R1566	315-0301-00	B010100	B109999	RES.,FXD,CMPSN:300 OHM,5%,0.25W	01121	CB3015
R1566	315-0471-00	B110000		RES.,FXD,CMPSN:470 OHM,5%,0.25W	01121	CB4715
R1567	315-0242-00			RES.,FXD,CMPSN:2.4K OHM,5%,0.25W	01121	CB2425
R1569	308-0459-00			RES.,FXD,WW:1.1 OHM,5%,3W	91637	RS2B-D1R100J
R1570	311-1373-00			RES.,VAR,NONWIR:5K OHM,20%,1W	01121	10M336A
R1571	315-0392-00	B010100	B159999	RES.,FXD,CMPSN:3.9K OHM,5%,0.25W	01121	CB3925
R1571	315-0302-00	B160000		RES.,FXD,CMPSN:3K OHM,5%,0.25W	01121	CB3025
R1581	315-0153-00			RES.,FXD,CMPSN:15K OHM,5%,0.25W	01121	CB1535
R1584	321-0359-00			RES.,FXD,FILM:53.6K OHM,1%,0.125W	75042	CEAT0-5362F
R1585	321-0280-00	B010100	B109999	RES.,FXD,FILM:8.06K OHM,1%,0.125W	75042	CEAT0-8061F
R1585[1]	321-0278-00	B110000		RES.,FXD,FILM:7.68K OHM,1%,0.125W	75042	CEAT0-7681F
R1586	316-0104-00			RES.,FXD,CMPSN:100K OHM,10%,0.25W	01121	CB1041
R1587	316-0104-00			RES.,FXD,CMPSN:100K OHM,10%,0.25W	01121	CB1041
R1589	315-0102-00			RES.,FXD,CMPSN:1K OHM,5%,0.25W	01121	CB1025
R1591	315-0912-00			RES.,FXD,CMPSN:9.1K OHM,5%,0.25W	01121	CB9125
R1592	315-0473-00			RES.,FXD,CMPSN:47K OHM,5%,0.25W	01121	CB4735
R1593	315-0822-00			RES.,FXD,CMPSN:8.2K OHM,5%,0.25W	01121	CB8225
R1594	315-0513-00			RES.,FXD,CMPSN:51K OHM,5%,0.25W	01121	CB5135
R1596	315-0512-00			RES.,FXD,CMPSN:5.1K OHM,5%,0.25W	01121	CB5125
R1597	311-1221-00			RES.,VAR,NONWIR:50 OHM,20%,0.50W	80294	3386F-T04-500
R1598	321-0107-00			RES.,FXD,FILM:127 OHM,1%,0.125W	75042	CEAT0-1270F
R1599	321-0001-00			RES.,FXD,FILM:10 OHM,1%,0.125W	75042	CEAT0-10R00F
R1691	303-0150-00			RES.,FXD,CMPSN:15 OHM,5%,1W	01121	GB1505
R1692	321-0062-00			RES.,FXD,FILM:43.2 OHM,1%,0.125W	75042	CEAT0-43R20F
R1693	323-0140-00			RES.,FXD,FILM:280 OHM,1%,0.50W	75042	CECT0-2800F
R1694	323-0140-00			RES.,FXD,FILM:280 OHM,1%,0.50W	75042	CECT0-2800F
R1695	321-0228-00			RES.,FXD,FILM:2.32K OHM,1%,0.125W	75042	CEAT0-2321F
R1697	321-0201-00			RES.,FXD,FILM:1.21K OHM,1%,0.125W	75042	CEAT0-1211F
R1698	315-0363-00			RES.,FXD,CMPSN:36K OHM,5%,0.25W	01121	CB3635
RT39	307-0124-00			RES.,THERMAL:5K OHM,10%	50157	1D1618
RT131	307-0124-00			RES.,THERMAL:5K OHM,10%	50157	1D1618
RT231	307-0124-00			RES.,THERMAL:5K OHM,10%	50157	1D1618
RT422	307-0181-00			RES.,THERMAL:100K OHM,10%,4MW/DEG C	50157	JP-51J2
RT557	307-0124-00	XB010725		RES.,THERMAL:5K OHM,10%	50157	1D1618
RT657	307-0124-00	XB010725		RES.,THERMAL:5K OHM,10%	50157	1D1618
RT1230	307-0122-00			RES.,THERMAL:50 OHM,10%	50157	3D1515
RT1696	307-0124-00			RES.,THERMAL:5K OHM,10%	50157	1D1618
RT4448	307-0181-00			RES.,THERMAL:100K OHM,10%,4MW/DEG C	50157	JP-51J2
S5[2]						
S10	105-0342-00	B010100	B169999	DRUM,CAM SWITCH:	80009	105-0342-00
S10	105-0342-01	B170000		DRUM,CAM SWITCH:VOLTS/DIV CH 1	80009	105-0342-01
S55[2]						
S60	105-0342-00	B010100	B169999	DRUM,CAM SWITCH:	80009	105-0342-00
S60	105-0342-01	B170000		DRUM,CAM SWITCH:VOLTS/DIV CH 2	80009	105-0342-01
S112[3]						

[1]This value is used in some earlier instruments.
[2]See Mechanical Parts List for replacement parts.
[3]Furnished as a unit with R112.

Ckt No.	Tektronix Part No.	Serial/Model No. Eff	Dscont	Name & Description	Mfr Code	Mfr Part Number
S212[1]						
S225	260-1208-00			SWITCH,PUSH:DPDT	80009	260-1208-00
S338A	105-0423-00			ACTUATOR,SWITCH:	80009	105-0423-00
S338B	105-0421-00			ACTUATOR,SWITCH:	80009	105-0421-00
S350	260-1424-01			SWITCH,PUSH:	80009	260-1424-01
S400	260-1421-00			SWITCH,PUSH:	80009	260-1421-00
S510	105-0401-00			ACTUATOR,SWITCH:	80009	105-0401-00
S515	105-0399-00			ACTUATOR,SWITCH:	80009	105-0399-00
S530[2]						
S610	105-0400-00			ACTUATOR,SWITCH:	80009	105-0400-00
S615	105-0399-00			ACTUATOR,SWITCH:	80009	105-0399-00
S630[3]						
S1100	260-1422-00			SWITCH,PUSH:	80009	260-1422-00
S1120	260-1423-00			SWITCH,PUSH:	80009	260-1423-00
S1140[4]						
S1150	263-1086-00			DRUM ASSY,CAM S:TIME/CM	80009	263-1086-00
S1155A,B[5]						
S1239	260-1208-00			SWITCH,PUSH:DPDT	80009	260-1208-00
S1501	260-0834-00			SWITCH,TOGGLE:DPDT,5A,125VAC,0.25-40 THD	09353	7201SN260-834-1B
S1502	260-0638-00			SW,THERMOSTATIC:10A,240V,OPEN 75 DEG C	93410	110-364
S1503	260-1300-01			SWITCH,SLIDE:DPDT,3A,125V	82389	11A-1354
T354	120-0366-00			XFMR,TOROID:2 WINDINGS	80009	120-0366-00
T1420[6]	120-0800-00	B010100	B109999	XFMR,PWR,SDN &:VARNISHED	80009	120-0800-00
T1420[6]	120-0800-01	B110000		XFMR,PWR,SDN &:MOLDED	80009	120-0800-01
T1501	120-0798-00	B010100	B049999	XFMR,PWR,STPDN:	80009	120-0798-00
T1501	120-0798-01	B050000		XFMR,PWR,STPDN:	80009	120-0798-01
U440	155-0115-00			MICROCIRCUIT,LI:CRT VERT DEFLECTION DRIVER	80009	155-0115-00
U540	155-0032-00			MICROCIRCUIT,LI:ML,PRE-AMPLIFIER	80009	155-0032-00
U640	155-0032-00			MICROCIRCUIT,LI:ML,PRE-AMPLIFIER	80009	155-0032-00
U870	155-0049-00	B010100	B039999	MICROCIRCUIT,DI:SWEEP CONTROL	80009	155-0049-00
U870	155-0049-01	B040000		MICROCIRCUIT,DI:MONOLITHIC,SWEEP CONTROL	80009	155-0049-01
U1432	152-0552-00			SEMICOND DEVICE:VOLTAGE MULTIPLIER	80009	152-0552-00
U1524	156-0158-00			MICROCIRCUIT,LI:DUAL OPERATIONAL AMPLIFIER	80009	156-0158-00
U1554	156-0158-00			MICROCIRCUIT,LI:DUAL OPERATIONAL AMPLIFIER	80009	156-0158-00
U1690	156-0281-00			MICROCIRCUIT,LI:4 TRANSISTOR ARRAY	80009	156-0281-00
V1440	154-0676-00	B010100	B049999	ELECTRON TUBE:CRT,P31,INT SCALE	80009	154-0676-00
V1440	154-0676-10	B050000		ELECTRON TUBE:CRT,P31,INT SCALE	80009	154-0676-10
VR21	152-0166-00			SEMICOND DEVICE:ZENER,0.4W,6.2V,5%	81483	69-9035
VR71	152-0166-00			SEMICOND DEVICE:ZENER,0.4W,6.2V,5%	81483	69-9035
VR129	152-0166-00			SEMICOND DEVICE:ZENER,0.4W,6.2V,5%	81483	69-9035
VR229	152-0166-00			SEMICOND DEVICE:ZENER,0.4W,6.2V,5%	81483	69-9035
VR875	152-0278-00			SEMICOND DEVICE:ZENER,0.4W,3V,5%	07910	1N4372A
VR896	152-0227-00			SEMICOND DEVICE:ZENER,0.4W,6.2V,5%	81483	69-6585
VR1039	152-0166-00			SEMICOND DEVICE:ZENER,0.4W,6.2V,5%	81483	69-9035
VR1099	152-0166-00			SEMICOND DEVICE:ZENER,0.4W,6.2V,5%	81483	69-9035
VR1145	152-0395-00			SEMICOND DEVICE:ZENER,0.4W,4.3V,5%	07910	1N749A
VR1146	152-0166-00			SEMICOND DEVICE:ZENER,0.4W,6.2V,5%	81483	69-9035
VR1155	152-0278-00			SEMICOND DEVICE:ZENER,0.4W,3V,5%	07910	1N4372A
VR1289	152-0166-00			SEMICOND DEVICE:ZENER,0.4W,6.2V,5%	81483	69-9035
VR1428	152-0289-00	XB130000		SEMICOND DEVICE:ZENER,0.4W,180V,5%	07910	1N991B
VR1434	152-0247-00	B010100	B079999X	SEMICOND DEVICE:ZENER,0.4W,150V,5%	04713	1N989B
VR1441	152-0283-00	B010100	B079999X	SEMICOND DEVICE:ZENER,0.4W,43V,5%	04713	1N976B

[1]Furnished as a unit with R212.
[2]Furnished as a unit with R530.
[3]Furnished as a unit with R630.
[4]Furnished as a unit with R1140.
[5]Furnished as a unit with R1155.
[6]Either of these transformers may be used in the instrument.

Ckt No.	Tektronix Part No.	Serial/Model No. Eff	Dscont	Name & Description	Mfr Code	Mfr Part Number
VR1484	152-0286-00			SEMICOND DEVICE:ZENER,0.4W,75V,5%	04713	1N982B
VR1515	152-0562-00	B010100	B079999	SEMICOND DVC,DI:ZENER,82V,400MV	99942	HM82BP0RM1PCT
VR1515	152-0268-00	B080000		SEMICOND DEVICE:ZENER,0.4W,56V,5%	04713	1N979B
VR1522	152-0411-00			SEMICOND DEVICE:ZENER,0.25W,9V,5%	04713	1N937
VR1523	152-0243-00	XB110000	B159999X	SEMICOND DEVICE:ZENER,0.4W,15V,5%	81483	1N965B
VR1524	152-0304-00	B010100	B109999	SEMICOND DEVICE:ZENER,0.4W,20V,5%	04713	1N968B
VR1524	152-0508-00	B110000	B159999X	SEMICOND DEVICE:ZENER,0.4W,12.5V,5%	80009	152-0508-00
VR1525	152-0283-00			SEMICOND DEVICE:ZENER,0.4W,43V,5%	04713	1N976B
VR1526	152-0281-00	XB160000		SEMICOND DEVICE:ZENER,0.4W,22V,5%	04713	1N969B
VR1533	152-0304-00			SEMICOND DEVICE:ZENER,0.4W,20V,5%	04713	1N968B
VR1570	152-0127-00			SEMICOND DEVICE:ZENER,0.4W,7.5V,5%	04713	1N755A

DIAGRAMS AND CIRCUIT BOARD ILLUSTRATIONS

Symbols and Reference Designators

Electrical components shown on the diagrams are in the following units unless noted otherwise:

Capacitors =	Values one or greater are in picofarads (pF).
	Values less than one are in microfarads (μF).
Resistors =	Ohms (Ω)

Symbols used on the diagrams are based on USA Standard Y32.2-1967.

Logic symbology is based on MIL-STD-806B in terms of positive logic. Logic symbols depict the logic function performed and may differ from the manufacturer's data.

The following special symbols are used on the diagrams:

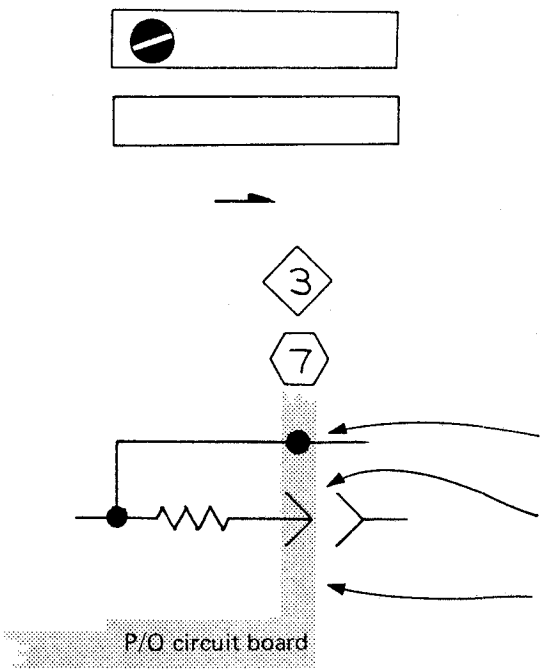

External Screwdriver adjustment.

External control or connector.

Clockwise control rotation in direction of arrow.

Refer to diagram number indicated in diamond.

Refer to waveform number indicated in hexagon.

Connection soldered to circuit board.

Connection made to circuit board with interconnecting pin.

Blue tint encloses components located on circuit board.

The following prefix letters are used as reference designators to identify components or assemblies on the diagrams.

A	Assembly, separable or repairable (circuit board, etc.)
AT	Attenuator, fixed or variable
B	Motor
BT	Battery
C	Capacitor, fixed or variable
CR	Diode, signal or rectifier
DL	Delay line
DS	Indicating device (lamp)
F	Fuse
FL	Filter
H	Heat dissipating device (heat sink, heat radiator, etc.)
HR	Heater
J	Connector, stationary portion
K	Relay
L	Inductor, fixed or variable
LR	Inductor/resistor combination
M	Meter
Q	Transistor or silicon-controlled rectifier
P	Connector, movable portion
R	Resistor, fixed or variable
RT	Thermistor
S	Switch
T	Transformer
TP	Test point
U	Assembly, inseparable or non-repairable (integrated circuit, etc.)
V	Electron tube
VR	Voltage regulator (zener diode, etc.)
Y	Crystal

REPLACEABLE MECHANICAL PARTS

PARTS ORDERING INFORMATION

Replacement parts are available from or through your local Tektronix, Inc. Field Office or representative.

Changes to Tektronix instruments are sometimes made to accommodate improved components as they become available, and to give you the benefit of the latest circuit improvements developed in our engineering department. It is therefore important, when ordering parts, to include the following information in your order: Part number, instrument type or number, serial number, and modification number if applicable.

If a part you have ordered has been replaced with a new or improved part, your local Tektronix, Inc. Field Office or representative will contact you concerning any change in part number.

Change information, if any, is located at the rear of this manual.

SPECIAL NOTES AND SYMBOLS

X000	Part first added at this serial number
00X	Part removed after this serial number

FIGURE AND INDEX NUMBERS

Items in this section are referenced by figure and index numbers to the illustrations.

INDENTATION SYSTEM

This mechanical parts list is indented to indicate item relationships. Following is an example of the indentation system used in the description column.

1 2 3 4 5 Name & Description

Assembly and/or Component
Attaching parts for Assembly and/or Component
- - - * - - -
Detail Part of Assembly and/or Component
Attaching parts for Detail Part
- - - * - - -
Parts of Detail Part
Attaching parts for Parts of Detail Part
- - - * - - -

Attaching Parts always appear in the same indentation as the item it mounts, while the detail parts are indented to the right. Indented items are part of, and included with, the next higher indentation. The separation symbol - - - * - - - indicates the end of attaching parts.

Attaching parts must be purchased separately, unless otherwise specified.

ITEM NAME

In the Parts List, an Item Name is separated from the description by a colon (:). Because of space limitations, an Item Name may sometimes appear as incomplete. For further Item Name identification, the U.S. Federal Cataloging Handbook H6-1 can be utilized where possible.

ABBREVIATIONS

"	INCH
#	NUMBER SIZE
ACTR	ACTUATOR
ADPTR	ADAPTER
ALIGN	ALIGNMENT
AL	ALUMINUM
ASSEM	ASSEMBLED
ASSY	ASSEMBLY
ATTEN	ATTENUATOR
AWG	AMERICAN WIRE GAGE
BD	BOARD
BRKT	BRACKET
BRS	BRASS
BRZ	BRONZE
BSHG	BUSHING
CAB	CABINET
CAP	CAPACITOR
CER	CERAMIC
CHAS	CHASSIS
CKT	CIRCUIT
COMP	COMPOSITION
CONN	CONNECTOR
COV	COVER
CPLG	COUPLING
CRT	CATHODE RAY TUBE
DEG	DEGREE
DWR	DRAWER
ELCTRN	ELECTRON
ELEC	ELECTRICAL
ELCTLT	ELECTROLYTIC
ELEM	ELEMENT
EPL	ELECTRICAL PARTS LIST
EQPT	EQUIPMENT
EXT	EXTERNAL
FIL	FILLISTER HEAD
FLEX	FLEXIBLE
FLH	FLAT HEAD
FLTR	FILTER
FR	FRAME or FRONT
FSTNR	FASTENER
FT	FOOT
FXD	FIXED
GSKT	GASKET
HDL	HANDLE
HEX	HEXAGON
HEX HD	HEXAGONAL HEAD
HEX SOC	HEXAGONAL SOCKET
HLCPS	HELICAL COMPRESSION
HLEXT	HELICAL EXTENSION
HV	HIGH VOLTAGE
IC	INTEGRATED CIRCUIT
ID	INSIDE DIAMETER
IDENT	IDENTIFICATION
IMPLR	IMPELLER
IN	INCH
INCAND	INCANDESCENT
INSUL	INSULATOR
INTL	INTERNAL
LPHLDR	LAMPHOLDER
MACH	MACHINE
MECH	MECHANICAL
MTG	MOUNTING
NIP	NIPPLE
NON WIRE	NOT WIRE WOUND
OBD	ORDER BY DESCRIPTION
OD	OUTSIDE DIAMETER
OVH	OVAL HEAD
PH BRZ	PHOSPHOR BRONZE
PL	PLAIN or PLATE
PLSTC	PLASTIC
PN	PART NUMBER
PNH	PAN HEAD
PWR	POWER
RCPT	RECEPTACLE
RES	RESISTOR
RGD	RIGID
RLF	RELIEF
RTNR	RETAINER
SCH	SOCKET HEAD
SCOPE	OSCILLOSCOPE
SCR	SCREW
SE	SINGLE END
SECT	SECTION
SEMICOND	SEMICONDUCTOR
SHLD	SHIELD
SHLDR	SHOULDERED
SKT	SOCKET
SL	SLIDE
SLFLKG	SELF-LOCKING
SLVG	SLEEVING
SPR	SPRING
SQ	SQUARE
SST	STAINLESS STEEL
STL	STEEL
SW	SWITCH
T	TUBE
TERM	TERMINAL
THD	THREAD
THK	THICK
TNSN	TENSION
TPG	TAPPING
TRH	TRUSS HEAD
V	VOLTAGE
VAR	VARIABLE
W/	WITH
WSHR	WASHER
XFMR	TRANSFORMER
XSTR	TRANSISTOR

CROSS INDEX MFR. CODE NUMBER TO MANUFACTURER

MFR.CODE	MANUFACTURER	ADDRESS	CITY,STATE,ZIP
0000C	GETTIG ENGINEERING AND MANUFACTURING CO.		SPRINGMILL, PA 16875
00779	AMP, INC.	P. O. BOX 3608	HARRISBURG, PA 17105
01295	TEXAS INSTRUMENTS, INC., SEMICONDUCTOR GROUP	P. O. BOX 5012	DALLAS, TX 75222
05129	KILO ENGINEERING CO.	2015 D	LA VERNE, CA 91750
05820	WAKEFIELD ENGINEERING, INC.	AUDUBON ROAD	WAKEFIELD, MA 01880
06982	MOORE, HOWARD J., CO.	105 E. 16TH ST.	NEW YORK, NY 10003
07700	TECHNICAL WIRE AND PRODUCTS, INC.	129 DERMODY ST.	CRANFORD, NJ 07016
08261	SPECTRA-STRIP CORP.	7100 LAMPSON AVE.	GARDEN GROVE, CA 92642
09353	C AND K COMPONENTS, INC.	103 MORSE STREET	WATERTOWN, MA 02172
12327	FREEWAY CORP.	9301 ALLEN DR.	CLEVELAND, OH 44125
12360	ALBANY PRODUCTS CO., DIV. OF PNEUMO DYNAMICS CORP.	351 CONNECTICUT AVE.	SOUTH NORWALK, CT 06856
16428	BELDEN CORP.	P. O. BOX 1101	RICHMOND, IN 47374
22526	BERG ELECTRONICS, INC.	YOUK EXPRESSWAY	NEW CUMBERLAND, PA 17070
23050	PRODUCT COMPONENTS CORP	30 LORRAINE AVE.	MT VERNON, NY 10553
23499	GAVITT WIRE AND CABLE, DIVISION OF RSC INDUSTRIES, INC.	455 N. QUINCE ST.	ESCONDIDO, CA 92025
24931	SPECIALTY CONNECTOR CO., INC.	3560 MADISON AVE.	INDIANAPOLIS, IN 46227
28817	CAL-METEX CORP., SUBSIDIARY OF METEX CORP.	509 HINDRY AVE.	INGLEWOOD, CA 90301
42838	NATIONAL RIVET AND MFG. CO.	1-21 EAST JEFFERSON ST.	WAUPUN, WI 53963
51316	ANGELUS WASHER AND STAMPING CO.	1411 ESPERANZA ST.	LOS ANGELES, CA 90023
70276	ALLEN MFG. CO.	P. O. DRAWER 570	HARTFORD, CT 06101
70278	ALLIED STEEL AND CONVEYORS, DIV. OF SPARTON CORP.	17333 HEALY	DETROIT, MI 48212
71279	CAMBRIDGE THERMIONIC CORP.	445 CONCORD AVE.	CAMBRIDGE, MA 02138
71590	CENTRALAB ELECTRONICS, DIV. OF GLOBE-UNION, INC.	5757 N. GREEN BAY AVE.	MILWAUKEE, WI 53201
71785	TRW ELECTRONIC COMPONENTS, CINCH CONNECTOR OPERATIONS	1501 MORSE AVE.	ELK GROVE VILLAGE, IL 60007
72228	CONTINENTAL SCREW CO., DIV. OF AMTEL, INC. DIVISION	459 MT. PLEASANT	NEW BEDFORD, MA 02746
73743	FISCHER SPECIAL MFG. CO.	170 PEARL ST. SOUTH	BRAINTREE, MA 02185
74445	HOLO-KROME CO.	446 MORGAN ST.	CINCINNATI, OH 45206
74921	ITEN FIBRE CO., THE	31 BROOK ST. WEST	HARTFORD, CT 06110
75497	LAMSON AND SESSIONS CO., THE	4001 BENEFIT AVE.	ASHTABULA, OH 44004
77250	PHEOLL MANUFACTURING CO., DIVISION OF ALLIED PRODUCTS CORP.	5000 TIEDEMAN ROAD	CLEVELAND, OH 44144
78189	ILLINOIS TOOL WORKS, INC. SHAKEPROOF DIVISION	5700 W. ROOSEVELT RD.	CHICAGO, IL 60650
79136	WALDES, KOHINOOR, INC.	ST. CHARLES ROAD	ELGIN, IL 60120
79807	WROUGHT WASHER MFG. CO.	47-16 AUSTEL PLACE	LONG ISLAND CITY, NY 11101
80009	TEKTRONIX, INC.	2100 S. O BAY ST.	MILWAUKEE, WI 53207
80033	PRESTOLE EVERLOCK, INC.	P. O. BOX 500	BEAVERTON, OR 97077
82389	SWITCHCRAFT, INC.	P. O. BOX 278-1345 MIAMI ST.	TOLEDO, OH 43605
82647	TEXAS INSTRUMENTS, INC., CONTROL PRODUCTS DIV.	5555 N. ELSTON AVE.	CHICAGO, IL 60630
83330	SMITH, HERMAN H., INC.	34 FOREST ST.	ATTLEBORO, MA 02703
83385	CENTRAL SCREW CO.	812 SNEDIKER AVE.	BROOKLYN, NY 11207
88245	LITTON SYSTEMS, INC., USECO DIV.	2530 CRESCENT DR.	BROADVIEW, IL 60153
93410	ESSEX INTERNATIONAL, INC., CONTROLS DIV. MANSFIELD PLANT	13536 SATICOY ST.	VAN NUYS, CA 91409
97464	INDUSTRIAL RETAINING RING CO.	P. O. BOX 1007	MANSFIELD, OH 44903
98278	MALCO A MICRODOT CO., INC., CONNECTOR AND CABLE DIVISION	57 CORDIER ST.	IRVINGTON, NJ 07111
		220 PASADENA AVE.	SOUTH PASADENA, CA 91030

Fig. & Index No.	Tektronix Part No.	Serial/Model No. Eff	Dscont	Qty	1 2 3 4 5 Name & Description	Mfr Code	Mfr Part Number
1-1	200-1411-00			1	BEZEL,CRT:	80009	200-1411-00
-2	213-0313-00			4	. THUMBSCREW:4-40 X 0.45 INCH,KNURLED	80009	213-0183-00
-3	337-1674-00			1	SHLD,ELCTRN TUB:CRT	80009	337-1674-00
-4	366-0494-00			3	KNOB:GRAY	80009	366-0494-00
	----- -----			-	. each knob includes:		
	213-0153-00			1	. SETSCREW:5-40 X 0.125 INCH,HEX SOC STL	74445	OBD
-5	358-0378-01			14	BUSHING,SLEEVE:0.25-32 X 0.535 INCH LONG	80009	358-0378-01
-6	358-0216-00	B010100	B169999	3	BUSHING,PLASTIC:0.257 ID X 0.412 INCH OD	80009	358-0216-00
-7	366-1031-02			2	KNOB:RED-VAR	80009	366-1031-02
	----- -----			-	. each knob includes:		
	213-0153-00			1	. SETSCREW:5-40 X 0.125 INCH,HEX SOC STL	74445	OBD
-8	366-1426-00			2	KNOB:GRAY	80009	366-1426-00
	----- -----			-	. each knob includes:		
	213-0153-00			2	. SETSCREW:5-40 X 0.125 INCH,HEX SOC STL	74445	OBD
-9	366-0215-02			2	KNOB:LEVER SWITCH	80009	366-0215-02
-10	366-1402-31			1	PUSH BUTTON:GRAY--INVERT	80009	366-1402-31
-11	366-1402-32	B010100	B099999	1	PUSH BUTTON:GRAY--BEAM FIND	80009	366-1402-32
	366-1402-42	B100000		1	PUSH BUTTON:--BEAM FINDER	80009	366-1402-42
-12	378-0803-01			2	LENS,LIGHT:CLEAR,ATTENUATOR	80009	378-0803-01
-13	366-1257-20			1	PUSH BUTTON:GRAY--CH2	80009	366-1257-20
-14	366-1402-37			1	PUSH BUTTON:GRAY--CHOP	80009	366-1402-37
-15	366-1257-16			1	PUSH BUTTON:GRAY--ADD	80009	366-1257-16
-16	366-1402-36			1	PUSH BUTTON:GRAY--ALT	80009	366-1402-36
-17	366-1257-19			1	PUSH BUTTON:GRAY--CH1	80009	366-1257-19
-18	426-0681-00			16	FR,PUSH BUTTON:GRAY PLASTIC	80009	426-0681-00
-19	366-1023-01			3	KNOB:GRAY	80009	366-1023-01
	----- -----			-	. each knob includes:		
	213-0153-00			1	. SETSCREW:5-40 X 0.125 INCH,HEX SOC STL	74445	OBD
-20	366-1346-02			1	KNOB:RED	80009	366-1346-00
	213-0153-00			1	. SETSCREW:5-40 X 0.125 INCH,HEX SOC STL	74445	OBD
-21	366-1219-00	B010100	B069999	1	KNOB:0.906 OD X 0.89 INCH L	80009	366-1219-00
	366-1219-01	B070000	B149999	1	KNOB:GRAY--DLYD SWP	80009	366-1219-01
	366-1219-02	B150000		1	KNOB:GRAY--DLYD SWP	80009	366-1219-02
	213-0153-00	B010100	B149999X	2	. SETSCREW:5-40 X 0.125 INCH,HEX SOC STL	74445	OBD
	377-0293-01	B150000		1	INSERT,KNOB:INTERLOCKING	80009	377-0293-01
	213-0004-00	B150000		2	. SETSCREW:6-32 X 0.188 INCH,HEX.SOC STL	74445	OBD
	213-0153-00	B150000		1	. SETSCREW:5-40 X 0.125 INCH,HEX SOC STL	74445	OBD
-22	354-0442-00	B010100	B089999	1	RING,KNOB SKIRT:PLASTIC,1.45 INCH DIA	80009	354-0442-00
	354-0442-01	B090000		1	RING,knob skirt		
	213-0153-00	B010100	B089999	1	. SETSCREW:5-40 X 0.125 INCH,HEX SOC STL	74445	OBD
	213-0005-00	B090000		1	. SETSCREW:8-32 X 1.25 INCH,HEX SOC STL	74445	OBD
-23	401-0080-00			1	BRG,KNOB SKIRT:0.789 ID X 0.866"OD PLASTIC	80009	401-0080-00
-24	366-1327-00			1	KNOB:GRAY	80009	366-1327-00
	213-0153-00			1	. SETSCREW:5-40 X 0.125 INCH,HEX SOC STL	74445	OBD
-25	366-1280-00			3	KNOB:GRAY	80009	366-1278-00
	----- -----			-	. each knob includes:		
	213-0153-00			1	. SETSCREW:5-40 X 0.125 INCH,HEX SOC STL	74445	OBD
-26	366-1402-33			1	PUSH BUTTON:GRAY--X10	80009	366-1402-33
-27	366-1402-35			1	PUSH BUTTON:GRAY--B DLY'D	80009	366-1402-35
-28	366-1402-44			1	PUSH BUTTON:GRAY--A INTEN	80009	366-1402-44
-29	366-1257-29			1	PUSH BUTTON:GRAY--SNGL SWP	80009	366-1257-29
-30	366-1402-34	B010100	B069999	1	PUSH BUTTON:GRAY--A	80009	366-1402-34
	366-1489-36	B070000	B179999	1	PUSH BUTTON:GRAY--A LOCK KNOBS	80009	366-1489-36
	366-1402-34	B180000		1	PUSH BUTTON:GRAY--A	80009	366-1402-34
-31	366-1402-38			1	PUSH BUTTON:GRAY--AUTO	80009	366-1402-38
-32	366-1402-39			1	PUSH BUTTON:GRAY--NORM	80009	366-1402-39
-33	366-1402-29			1	PUSH BUTTON:GRAY--MIX	80009	366-1402-29
-34	378-0803-00			5	LENS,LIGHT:CLEAR	80009	378-0803-00
-35	366-1278-00			2	KNOB:GRAY	80009	366-1278-00
	----- -----			-	. each knob includes:		
	213-0153-00			1	. SETSCREW:5-40 X 0.125 INCH,HEX SOC STL	74445	OBD
-36	----- -----[1]			1	RESISTOR,VAR:W/HARDWARE		
-37	331-0328-00			1	DIAL,CONTROL:10 TURN FOR 0.25 DIA SHAFT	05129	461-S-70

[1] See Electrical Parts List for part number.

Fig. & Index No.	Tektronix Part No.	Serial/Model No. Eff	Dscont	Qty	1 2 3 4 5 Name & Description	Mfr Code	Mfr Part Number
1-	213-0048-00			1	. SETSCREW:4-40 X 0.125 INCH,HEX SOC STL	74445	OBD
-38	378-0635-00			4	LENS,LIGHT:WHITE	80009	378-0635-00
-39	333-1635-00			1	PANEL,front		
-40	----- -----[1]			4	RESISTOR,VAR:		
					(ATTACHING PARTS FOR EACH)		
-41	210-0583-00			1	NUT,PLAIN,HEX.:0.25-32 X 0.312 INCH,BRS	73743	2X20224-402
-42	210-0940-00			1	WASHER,FLAT:0.25 ID X 0.375 INCH OD,STL	79807	OBD
					- - - * - - -		
-43	131-0955-00			2	CONNECTOR,RCPT,:BNC,FEMALE	24931	28JR200-1
-44	119-0373-00			1	COIL,CALIBRATIO:	80009	119-0373-00
					(ATTACHING PARTS)		
-45	210-0586-00			2	NUT,PLAIN,EXT W:4-40 X 0.25 INCH,STL	78189	OBD
-46	210-0994-00	B010100	B197749	2	WASHER,FLAT:0.125 ID X 0.25" OD,STL	83385	OBD
	210-0851-00	B197750		2	WASHER,FLAT:0.119 ID X 0.375 INCH OD,STL	12327	OBD
-47	210-0849-00	B010100	B197749	2	WSHR,SHOULDERED:0.11 ID X 0.188"OD,FIBER	83330	2151
	210-0811-00	B197750		2	WASH.,SHOULDERE:0.125 ID X 0.50 INCH OD	74921	6525
-48	361-0059-01			1	SPACER,CUR LOOP:1.094 X 0.344 X 0.125 INCH	80009	361-0059-01
-49	210-0593-00			2	NUT,FINISHING:0.25 HEX X 0.312" LONG,BRS	80009	210-0593-00
					- - - * - - -		
-50	386-2330-00			1	SUBPANEL,FRONT:	80009	386-2330-00
					(ATTACHING PARTS)		
-51	213-0107-00			11	SCR,TPG,THD FOR:4-40 X 0.25 INCH,FLH STL	72228	OBD
					- - - * - - -		
-52	352-0340-00			2	LAMPHOLDER:SCALE FACTOR	80009	352-0340-00
					(ATTACHING PARTS FOR EACH)		
-53	211-0001-00			1	SCREW,MACHINE:2-56 X 0.25 INCH,PNH STL	83385	OBD
	210-0851-00	B197750		2	WASHER,FLAT:0.119 ID X 0.375 INCH OD,STL	12327	OBD
					- - - * - - -		
	210-0811-00	B197750		2	WASH.,SHOULDERE:0.125 ID X 0.50 INCH OD	74921	6525
-54	348-0276-00			ft	SHLD GSKT,ELEC:0.026 OD NPRNW/WIRE NET CO	28817	01-0404-3719
-55	426-0926-01			1	FRAME,CABINET:FRONT	80009	426-0926-01
					(ATTACHING PARTS)		
-56	213-0183-00			4	SCR,TPG,THD FOR:6-32 X 0.25 INCH,PNH STL	83385	OBD
					- - - * - - -		
-57	386-2340-00			4	SUPPORT,CRT:FRONT	80009	386-2340-00
-58	----- -----[1]			1	CKT BOARD ASSY:GRATICULE ILLUM A10		
-59	378-0728-00			1	. REFLECTOR,LIGHT:SCALE ILLUMINATION	80009	378-0728-00
-60	352-0329-00			1	. LAMPHOLDER:SCALE ILLUMINATION	80009	352-0329-00
-61	175-0825-00			ft	. WIRE,ELECTRICAL0.833 FT 2 WIRE RIBBON	23499	TEK-175-0825-00
-62	131-0707-00			2	. CONTACT,ELEC:0.48"L,22-26 AWG WIRE	22526	47439
-63	352-0169-02			1	. CONN BODY,PL,EL:2 WIRE RED	80009	352-0169-00
-64	441-1084-00	B010100	B099999	1	CHAS,ELEC EQUIP:MAIN	80009	441-1084-00
	441-1084-03	B100000		1	CHASSIS,main		
-65	----- -----[1]			1	COIL:TRACE ROTATION		
-66	344-0250-00			1	CLIP,ELECTRICAL:COMPONENT MOUNTING	80033	E5001-041
					(ATTACHING PARTS)		
-67	211-0008-00	B010100	B119999X	1	SCREW,MACHINE:4-40 X 0.25 INCH,PNH STL	83385	OBD
-68	210-0586-00	B010100	B119999	1	NUT,PLAIN,EXT W:4-40 X 0.25 INCH,STL	78189	OBD
	210-0623-00	B120000		1	RIVET,0.125 OD x 0.125 inch long		
					- - - * - - -		
-69	348-0253-00			1	GROMMET,PLASTIC:1.24 X 0.739 X 0.108" OA	80009	348-0253-00
-70	348-0115-00			1	GROMMET,PLASTIC:U-SHP,0.548 X0.462 INCH	80009	348-0115-00
-71	348-0063-00	B010100	B119999	3	GROMMET,PLASTIC:0.50 INCH DIA	80009	348-0063-00
	348-0063-00	B120000		1	GROMMET,PLASTIC:0.50 INCH DIA	80009	348-0063-00
	348-0064-00	B120000		2	GROMMET,PLASTIC:0.625 INCH DIA	80009	348-0064-00
-72	348-0056-00			4	GROMMET,PLASTIC:0.375 INCH DIA	80009	348-0056-00
-73	----- -----[1]			1	DELAY LINE:		
	131-1002-02			1	. RETAINER,WIRE,E:	80009	131-1002-02
	131-1313-00			1	. RETAINER,WIRE,E:DELAY LINE TERMINAL	80009	131-1313-00
-74	407-1137-00			1	BRKT,DELAY LINE:	80009	407-1137-00
					(ATTACHING PARTS)		
-75	210-0457-00			1	NUT,PLAIN,EXT W:6-32 X 0.312 INCH,STL	83385	OBD
					- - - * - - -		

[1]See Electrical Parts List for part number.

Fig. & Index No.	Tektronix Part No.	Serial/Model No. Eff	Dscont	Qty	1 2 3 4 5 Name & Description	Mfr Code	Mfr Part Number
1-76	----- -----[1]			3	TRANSISTOR:		
					(ATTACHING PARTS FOR EACH)		
-77	211-0012-00			1	SCREW,MACHINE:4-40 X 0.375 INCH,PNH STL	83385	OBD
-78	210-0071-00			1	WASHER,SPR TNSN:0.146 ID X 0.323" OD,STL	78189	4706-05-01-0531
-79	342-0163-00			1	INSULATOR,PLATE:XSTR,0.675 X 0.625 X 0.001"	80009	342-0163-00
					- - - * - - -		
-80	----- -----[1]			1	TRANSFORMER:		
-81	407-1066-00			1	. BRKT,XFMR MTG:	80009	407-1066-00
-82	212-0522-00			4	. SCREW,MACHINE:10-32 X 2.50",HEX HD STL	83385	OBD
-83	210-0812-00			4	. WASHER,NONMETAL:#10,FIBER	06982	OBD
-84	166-0457-00			4	. INSUL SLVG,ELEC:0.19 ID X 1.875"LONG MYLAR	80009	166-0457-00
-85	200-1544-01			1	. COVER,XFMR:3 L X 2.5 W X 0.65 INCH H	80009	200-1544-01
	210-0056-00			4	. WASHER,LOCK:SPLIT,0.047 ID X 0.32" OD,P BRZ	83385	OBD
-86	220-0561-00			4	. NUT,PLAIN,HEX.:10-32 X 0.25 INCH,BRS	80009	220-0561-00
					(ATTACHING PARTS)		
-87	211-0538-00			2	SCREW,MACHINE:6-32 X 0.312"100 DEG,FLH STL	83385	OBD
-88	210-0457-00			4	NUT,PLAIN,EXT W:6-32 X 0.312 INCH,STL	83385	OBD
					- - - * - - -		
-89	337-1763-00	B010100	B099999	1	SHLD,ELECTRICAL:TRANSFORMER	80009	337-1763-00
	337-1763-01	B100000		1	SHIELD,ELEC:TRANSFORMER	80009	337-1763-01
-90	348-0063-00			1	GROMMET,PLASTIC:0.50 INCH DIA	80009	348-0063-00
-91	260-0638-00			1	SW,THERMOSTATIC:10A,240V,OPEN 75 DEG C	93410	110-364
					(ATTACHING PARTS)		
-92	213-0044-00			2	SCR,TPG,THD FOR:5-32 X 0.188 INCH,PNH STL	83385	OBD
					- - - * - - -		
-93	210-0201-00			1	TERMINAL,LUG:SE #4	78189	2104-04-00-2520N
					(ATTACHING PARTS)		
-94	211-0038-00			1	SCREW,MACHINE:4-40 X 0.312"100 DEG,FLH STL	83385	OBD
-95	210-0586-00			1	NUT,PLAIN,EXT W:4-40 X 0.25 INCH,STL	78189	OBD
					- - - * - - -		
-96	129-0388-00			2	POST,ELEC-MECH:1.673 INCH LONG	80009	129-0388-00
-97	337-1688-00			1	SHLD,ELECTRICAL:HIGH VOLTAGE	80009	337-1688-00
					(ATTACHING PARTS)		
-98	211-0065-00			3	SCREW,MACHINE:4-40 X 0.188 INCH,PNH STL	77250	OBD
					- - - * - - -		
-99	----- -----[1]			1	CKT BOARD ASSY:FAN MOTOR A6		
-100	136-0269-00	B010100	B187569	1	. SOCKET,PLUG-IN:14 CONTACT,LOW CLEARANCE	71785	133-59-02-073
	136-0269-02	B187570		1	. SOCKET,PLUG-IN:14 CONTACT,LOW CLEARANCE	01295	C931402
-101	131-0608-00			2	. CONTACT,ELEC:0.365 INCH LONG	22526	47357
-102	136-0252-04	B010100	B187569	3	. CONTACT,ELEC:0.188 INCH LONG	22526	75060
	136-0220-00	B187570		1	. SOCKET,PLUG-IN:3 PIN,SQUARE	71785	133-23-11-034
	----- -----			1	. MOTOR,FAN:		
-103	426-0781-00			1	. MOUNT,MOTOR:	80009	426-0781-00
					(ATTACHING PARTS)		
-104	213-0088-00			2	SCR,TPG,THD CTG:4-24 X 0.25 INCH,PNH STL	83385	OBD
					- - - * - - -		
-105	337-1762-00			1	SHLD,ELECTRICAL:FAN MOTOR	80009	337-1762-00
-106	426-0781-00			1	MOUNT,MOTOR:	80009	426-0781-00
					(ATTACHING PARTS)		
-107	213-0088-00			2	SCR,TPG,THD CTG:4-24 X 0.25 INCH,PNH STL	83385	OBD
					- - - * - - -		
-108	407-1153-00			1	BRKT,XSTR MTG:	80009	407-1153-00
					(ATTACHING PARTS)		
-109	210-0586-00			2	NUT,PLAIN,EXT W:4-40 X 0.25 INCH,STL	78189	OBD
					- - - * - - -		
-110	----- -----			1	TRANSISTOR:		
					(ATTACHING PARTS)		
-111	211-0012-00			2	SCREW,MACHINE:4-40 X 0.375 INCH,PNH STL	83385	OBD
-112	210-0205-00			1	TERMINAL,LUG:SE #8	78189	2104-08-00-2520N
-113	358-0214-00			2	INSULATOR,BSHG:0.25 DIA X 0.188 INCH L	80009	358-0214-00
-114	214-1610-00			1	HEAT SINK,ELEC:TRANSISTOR	80009	214-1610-00
					- - - * - - -		
-115	369-0031-00	B010100	B109999	1	IMPLR,FAN,AXIAL:2.60 INCH OD,PLASTIC	80009	369-0031-00
	369-0031-01	B110000		1	IMP,FAN,AXIAL:	80009	369-0031-01

[1]See Electrical Parts List for part number.

Fig. & Index No.	Tektronix Part No.	Serial/Model No. Eff	Dscont	Qty	1 2 3 4 5 Name & Description	Mfr Code	Mfr Part Number
1-116	348-0349-00			ft	SHLD GSKT,ELEC:0.187 INCH DIA,2.75 FT L	07700	2143951
-117	426-0970-00			1	FRAME SECT,CAB:REAR	80009	426-0970-00
-118	348-0339-00			4	FOOT,CABINET:W/CORD WRAP	80009	348-0339-00
					(ATTACHING PARTS FOR EACH)		
-119	212-0020-00			1	SCREW,MACHINE:8-32 X 1.0 INCH,PNH STL	83385	OBD
					- - - * - - -		
-120	386-2332-00			1	PANEL,REAR:	80009	386-2332-00
					(ATTACHING PARTS)		
-121	211-0105-00			1	SCREW,MACHINE:4-40 X 0.188"100 DEG,FLH STL	83385	OBD
					- - - * - - -		
-122	204-0549-01			1	BODY ASSY,LINE:	80009	204-0549-01
					(ATTACHING PARTS)		
-123	210-0407-00			2	NUT,PLAIN,HEX.:6-32 X 0.25 INCH,BRS	73743	3038-0228-402
-124	210-0006-00			2	WASHER,LOCK:INTL,0.146 IDX 0.288 OD,STL	78189	1206-00-00-0541C
					- - - * - - -		
	----- -----			-	. BODY ASSY INCLUDES:		
	214-0778-00			1	. CONTACT ASSY,EL:SELECTOR BLOCK	80009	214-0778-00
	131-1318-01			1	. CONTACT ASSY,EL:SHORTING BAR	80009	131-1318-01
-125	200-1445-01			1	COV ASSY,LINE V:	80009	200-1445-01
	352-0102-00			1	. FUSEHOLDER:0.262"ID TUBE FOR CRTG FUSE	80009	352-0102-00
					(ATTACHING PARTS)		
	213-0034-00			2	. SCR,TPG,THD CTG:4-40 X 0.188 INCH,PNH STL	83385	OBD
					- - - * - - -		
	161-0090-00	B010100	B010409	1	CABLE ASSEMBLY,power		
-126	161-0033-07	B010410		1	CABLE ASSY,PWR,:3 WIRE,92 INCH LONG	16428	KH8002
-127	358-0371-00			1	BSHG,STRAIN RLF:90 DEG,0.25 INCH DIA HOLE	80009	358-0371-00
-128	200-1004-00			1	CABLE,NIP.,ELEC:0.265 ID X 0.38"OD W/FLG	80009	200-1004-00
-129	358-0372-00			1	BSHG,STRAIN RLF:180 DEG,0.156" DIA HOLE	80009	358-0372-00
-130	200-1414-01	B010100	B190970	1	COVER,REAR:	80009	200-1414-05
	200-1414-05	B190971		1	COVER,REAR:		
					(ATTACHING PARTS)		
-131	211-0101-00			2	SCREW,MACHINE:4-40 X 0.25" 100 DEG,FLH STL	83385	OBD
-132	211-0516-00			2	SCREW,MACHINE:6-32 X 0.875 INCH,PNH STL	83385	OBD
					- - - * - - -		
-133	386-2408-00			1	PLATE,CONN MTG:BNC CONNECTORS	80009	386-2408-00
-134	131-0955-00			4	CONNECTOR,RCPT,:BNC,FEMALE	24931	28JR200-1
					(ATTACHING PARTS FOR EACH)		
-135	210-0255-00			1	TERMINAL,LUG:0.391" ID INT TOOTH	80009	210-0255-00
					- - - * - - -		
-136	378-0044-01			1	FIL ELEM,AIR CO:2.5 SQ X 0.25 INCH THK	80009	378-0044-01
-137	136-0515-00	B010100	B083999	1	SKT,PL-IN ELEK:	80009	136-0515-00
	136-0515-01	B084000		1	SKT,PL-IN ELEK:	80009	136-0515-01
-138	136-0202-01			1	. SOCKET,PLUG-IN:14 PIN	80009	136-0202-01
-139	131-0707-00			4	. CONTACT,ELEC:0.48"L,22-26 AWG WIRE	22526	47439
-140	352-0162-00			1	. CONN BODY,PL,EL:4 WIRE BLACK	80009	352-0162-00
-141	179-1873-00	B010100	B109999	1	WIRING HARNESS,:TRIGGER	80009	179-1873-00
	179-1873-01	B110000	B119999	1	WIRING HARNESS,trigger		
	179-1873-02	B120000		1	WIRING HARNESS,trigger		
-142	210-0774-00			3	. EYELET,METALLIC:0.152 OD X 0.245 INCH L,BRS	80009	210-0774-00
-143	210-0775-00			3	. EYELET,METALLIC:0.126 OD X 0.23 INCH L,BRS	80009	210-0775-00
-144	352-0171-00	B010100	B109999X	1	. CONN BODY,PL,EL:1 WIRE BLACK	80009	352-0171-00
-145	352-0169-00			2	. CONN BODY,PL,EL:2 WIRE BLACK	80009	352-0169-00
	131-0707-00			4	. CONTACT,ELEC:0.48"L,22-26 AWG WIRE	22526	47439
	131-0708-00	B010100	B109999X	1	. CONTACT,ELEC:0.48"L,28-32 AWG WIRE	22526	47437

Fig. & Index No.	Tektronix Part No.	Serial/Model No. Eff	Dscont	Qty	1 2 3 4 5 Name & Description	Mfr Code	Mfr Part Number
2-1	337-1711-01			1	SHLD,ELECTRICAL:HIGH VOLTAGE	80009	337-1711-01
					(ATTACHING PARTS)		
-2	211-0008-00			4	SCREW,MACHINE:4-40 X 0.25 INCH,PNH STL	83385	OBD
					- - - * - - -		
-3	342-0175-00			1	INSULATOR,FILM:3.65 X 4.70 INCH	80009	342-0175-00
-4	342-0159-00			1	INSULATOR,FILM:5.10 X 12.4 INCH	80009	342-0159-00
-5	129-0413-00			4	POST,ELEC-MECH:0.538 INCH L	80009	129-0413-00
-6	----- -----			2	TRANSISTOR:		
					(ATTACHING PARTS FOR EACH)		
-7	211-0180-00	B010100	B162999	1	SCR,ASSEM WSHR:2-56 X 0.25 INCH,PNH BRS	83385	OBD
	211-0182-00	B163000		1	SCR,ASSEM WSHR:2-56 X 0.312 INCH,PNH,STL	12360	OBD
-8	210-1156-00			1	WASHER,NONMETAL:0.09 ID X 0.121" OD,NYLON	80009	210-1156-00
-9	342-0166-00			1	INSULATOR,PLATE:TRANSISTOR	80009	342-0166-00
					- - - * - - -		
-10	----- -----[1]			1	CKT BOARD ASSY:INTERFACE A9		
-11	136-0499-04			1	. CONNECTOR,RCPT,:4 CONTACT	00779	3-380949-4
-12	136-0499-10			1	. CONNECTOR,RCPT,:10 CONTACT	00779	4-380949-0
-13	136-0499-14			1	. CONNECTOR,RCPT,:14 CONTACT	00779	4-380949-4
-14	214-0579-00			6	. TERM.,TEST PT:0.40 INCH LONG	80009	214-0579-00
-15	136-0252-04	B010100	B187569	162	. CONTACT,ELEC:0.188 INCH LONG	22526	75060
	136-0252-04	B187570		51	. CONTACT,ELEC:0.188 INCH LONG	22526	75060
	136-0220-00	B187570		29	. SOCKET,PLUG-IN:3 PIN,SQUARE	71785	133-23-11-034
	136-0219-00	B187570		2	. SOCKET,PLUG-IN:4 PIN	80009	136-0219-00
	136-0514-00	B187570		2	. SOCKET,PLUG-IN:MICROCIRCUIT,8 CONTACT	82647	C930802
-16	131-1261-00			24	. CONTACT,ELEC:F-SHAPED	00779	1-380953-0
-17	131-0566-00			7	. LINK,TERM.CONNE:0.086 DIA X 2.375 INCH L	0000C	L-2007-1
-18	344-0154-00			2	. CLIP,ELECTRICAL:FOR 0.25 INCH DIA FUSE	80009	344-0154-00
-19	124-0092-00			2	. TERMINAL BOARD:3 NOTCH	80009	124-0092-00
	----- -----			-	. . EACH STRIP INCLUDES:		
-20	355-0046-00			1	. . MOUNT,TERM. BD:0.577 INCH H	80009	355-0046-00
-21	124-0119-00			1	. TERMINAL BOARD:2 NOTCH	80009	124-0119-00
	355-0046-00			1	. . MOUNT,TERM. BD:0.577 INCH H	80009	355-0046-00
-22	124-0118-00	B010100	B159999	1	. TERMINAL BOARD:1 NOTCH	80009	124-0118-00
	355-0046-00	B010100	B159999	1	. MOUNT,TERM. BD:0.577 INCH H	80009	355-0046-00
	131-0382-00	B160000		1	. TERMINAL,STUD:	71279	4822-1-0516
					(ATTACHING PARTS)		
	210-0586-00	B160000		1	. NUT,PLAIN,EXT W:4-40 X 0.25 INCH,STL	78189	OBD
					- - - * - - -		
-23	358-0214-00			10	. INSULATOR,BSHG:0.25 DIA X 0.188 INCH L	80009	358-0214-00
-24	210-0966-00			1	. WASHER,NONMETAL:0.312 ID X 0.875" OD,RBR	80009	210-0966-00
-25	131-0608-00			33	. CONTACT,ELEC:0.365 INCH LONG	22526	47357
-26	214-0973-00			1	. HEAT SINK,ELEC:0.28 X 0.18 OVAL X 0.187"H	80009	214-0973-00
-27	----- -----[1]			1	. RES.,VAR:		
					(ATTACHING PARTS)		
-28	210-0583-00			1	. NUT,PLAIN,HEX.:0.25-32 X 0.312 INCH,BRS	73743	2X20224-402
-29	210-0940-00			1	. WASHER,FLAT:0.25 ID X 0.375 INCH OD,STL	79807	OBD
-30	210-0046-00			1	. WASHER,LOCK:INTL,0.26 ID X 0.40" OD,STL	78189	1214-05-00-0541C
					- - - * - - -		
-31	386-2433-00			1	. SUPPORT,VAR RES:CIRCUIT BOARD MOUNTING	80009	386-2433-00
-32	----- -----[1]			4	. RES.,VAR:		
-33	260-1208-00			1	. SWITCH,PUSH:DPDT	80009	260-1208-00
					(ATTACHING PARTS)		
-34	361-0384-00			2	. SPACER,PB SW:0.133 INCH LONG	80009	361-0384-00
	361-0607-00	XB120000		3	. SPACER,SWITCH:PLASTIC	80009	361-0607-00
					- - - * - - -		
-35	260-1421-00			1	. SWITCH,PUSH:	80009	260-1421-00
					(ATTACHING PARTS)		
-36	361-0385-00			2	. SPACER,PB SW:0.164 INCH LONG	80009	361-0385-00
					- - - * - - -		
-37	337-1759-00			1	. SHLD,ELECTRICAL:SWEEP	80009	337-1759-00
-38	----- -----[1]			1	. MULTIPLIER:		
					(ATTACHING PARTS)		
-39	220-0661-00			2	. NUT,SLFLKG,HEX:8-32 X 0.344 X 0.215",NYLON	23050	OBD
					- - - * - - -		

[1]See Electrical Parts List for part number.

Fig. & Index No.	Tektronix Part No.	Serial/Model No. Eff	Dscont	Qty	1 2 3 4 5 Name & Description	Mfr Code	Mfr Part Number
					(ATTACHING PARTS FOR CKT BD)		
2-							
-40	211-0116-00	B010100	B119999	8	SCR,ASSEM WSHR:4-40 X 0.312 INCH,PNH BRS	83385	OBD
	211-0207-00	B120000		8	SCR,ASSEM WSHR:4-40 X 0.312 INCH,PNH STL	83385	OBD
					- - - * - - -		
-41	384-1174-00			1	EXTENSION SHAFT:1.80 INCH LONG	80009	384-1174-00
-42	384-1179-00			1	EXTENSION SHAFT:9.312 INCH LONG	80009	384-1179-00
-43	384-1187-00			1	EXTENSION SHAFT:3.40 INCH LONG	80009	384-1187-00
-44	384-1173-00			1	EXTENSION SHAFT:1.90 INCH LONG	80009	384-1173-00
-45	384-1101-00			2	EXTENSION SHAFT:4.14 INCH LONG	80009	384-1101-00
-46	384-1149-00	B010100	B083999	1	EXTENSION SHAFT:7.0 INCH LONG	80009	384-1149-00
	384-0457-00	B084000		1	EXTENSION SHAFT:6.7 INCH LONG	80009	384-0457-00
-47	376-0051-00			3	CPLG,SHAFT,FLEX:FOR 0.125 INCH DIA SHAFTS	80009	376-0051-00
	----- -----			-	. each coupling includes:		
	213-0022-00			4	. SETSCREW:4-40 X 0.188 INCH,HEX SOC STL	74445	OBD
-48	376-0029-00			2	CPLG,SHAFT,RGD:0.128 ID X 0.312 OD X 0.5"L	80009	376-0029-00
	----- -----			-	. each coupling includes:		
	213-0022-00			2	. SETSCREW:4-40 X 0.188 INCH,HEX SOC STL	74445	OBD
-49	407-1133-00			1	BRACKET,SW MTG:POWER SWITCH	80009	407-1133-00
					(ATTACHING PARTS)		
-50	210-0406-00	B010100	B099999	2	NUT,PLAIN,HEX.:4-40 X 0.188 INCH,BRS	73743	2X12161-402
	210-0406-00	B100000		1	NUT,PLAIN,HEX.:4-40 X 0.188 INCH,BRS	73743	2X12161-402
-51	210-0994-00	B010100	B099999	2	WASHER,FLAT:0.125 ID X 0.25" OD,STL	83385	OBD
	210-0994-00	B100000		1	WASHER,FLAT:0.125 ID X 0.25" OD,STL	83385	OBD
					- - - * - - -		
	200-1526-00	XB030000		1	COV,INV SW HOLE:	80009	200-1526-00
-52	260-1300-01			1	SWITCH,SLIDE:DPDT,3A,125V	82389	11A-1354
					(ATTACHING PARTS)		
-53	211-0007-00	B010100	B119999	2	SCREW,MACHINE:4-40 X 0.188 INCH,PNH STL	83385	OBD
	211-0101-00	B120000		2	SCREW,MACHINE:4-40 X 0.25" 100 DEG,FLH STL	83385	OBD
					- - - * - - -		
-54	260-0834-00			1	SWITCH,TOGGLE:DPDT,5A,125VAC,0.25-40 THD	09353	7201SN260-834-1B
					(ATTACHING PARTS)		
-55	210-0562-00			1	NUT,PLAIN,HEX.:0.25-40 X 0.312 INCH,BBS	73743	2X20224-402
-56	210-0046-00			1	WASHER,LOCK:INTL,0.26 ID X 0.40" OD,STL	78189	1214-05-00-0541C
					- - - * - - -		
-57	----- -----[1]	B010100	B119999X	1	CKT BOARD ASSY:TRIG VIEW A11		
-58	136-0327-01	B010100	B119999X	4	. CONTACT,ELEC:0.067 INCH DIA	00779	86281-2
-59	214-0973-00	B010100	B119999X	1	. HEAT SINK,ELEC:0.28 X 0.18 OVAL X 0.187"H	80009	214-0973-00
-60	136-0252-04	B010100	B119999X	12	. CONTACT,ELEC:0.188 INCH LONG	22526	75060
					(ATTACHING PARTS FOR CKT BD)		
-61	211-0116-00	B010100	B119999X	1	SCR,ASSEM WSHR:4-40 X 0.312 INCH,PNH BRS	83385	OBD
					- - - * - - -		
-62	214-1756-00			1	ACTUATOR,SWITCH:POWER	80009	214-1756-00
-63	384-1159-00			1	EXTENSION SHAFT:10.384 INCH LONG,W/KNOB	80009	384-1159-00
-64	----- -----[1]			1	CKT BOARD ASSY:TRIG GEN AND LOGIC A8		
-65	131-1003-00	B010100	B119999	6	. CONNECTOR BODY,:CKT BD MT,3 PRONG	80009	131-1003-00
	131-1003-00	B120000		8	. CONNECTOR BODY,:CKT BD MT,3 PRONG	80009	131-1003-00
-66	214-0579-00	B010100	B119999	1	. TERM.,TEST PT:0.40 INCH LONG	80009	214-0579-00
	214-0579-00	B120000		3	. TERM.,TEST PT:0.40 INCH LONG	80009	214-0579-00
-67	131-0566-00			1	. LINK,TERM.CONNE:0.086 DIA X 2.375 INCH L	0000C	L-2007-1
-68	131-0590-00	B010100	B119999X	4	. CONTACT,ELEC:0.71 INCH LONG	22526	47351
	131-0608-00	B010100	B119999	12	. CONTACT,ELEC:0.365 INCH LONG	22526	47357
	131-0608-00	B120000		10	. CONTACT,ELEC:0.365 INCH LONG	22526	47357
-69	136-0252-04	B010100	B119999	148	. CONTACT,ELEC:0.188 INCH LONG	22526	75060
	136-0252-04	B120000	B187569	162	. CONTACT,ELEC:0.188 INCH LONG	22526	75060
	136-0252-04	B187570		55	. CONTACT,ELEC:0.188 INCH LONG	22526	75060
	136-0220-00	B187570		25	. SOCKET,PLUG-IN:3 PIN,SQUARE	71785	133-23-11-034
	136-0260-02	B187570		2	. SOCKET,PLUG-IN:16 CONTACT,LOW CLEARANCE	01295	C931602
-70	355-0175-00	B010100	B099999	2	. STUD,SELF-LKG:4-40 X 0.35 INCH LONG	80009	355-0175-00
	355-0175-00	B100000		1	. STUD,SELF-LKG:4-40 X 0.35 INCH LONG	80009	355-0175-00
-71	136-0499-14			1	. CONNECTOR,RCPT,:14 CONTACT	00779	4-380949-4
-72	136-0499-10			1	. CONNECTOR,RCPT,:10 CONTACT	00779	4-380949-0
-73	129-0411-00	B010100	B119999X	1	. POST,ELEC-MECH:HEX,0.188 X 0.315 INCH L	80009	129-0411-00
-74	200-1167-00			2	. COVER,XSTR:TEMP STAB FOR 2 TO-18 CS STYLE	05820	259-18-40
-75	352-0331-00			3	. LAMPHOLDER:	80009	352-0331-00

[1]See Electrical Parts List for part number.

Fig. & Index No.	Tektronix Part No.	Serial/Model No. Eff	Dscont	Qty	1 2 3 4 5 Name & Description	Mfr Code	Mfr Part Number
2-	214-0973-00	XB120000		1	. HEAT SINK,ELEC:0.28 X 0.18 OVAL X 0.187"H	80009	214-0973-00
-76	131-1031-00			23	. CONTACT ASSY,EL:CAM SWITCH,TOP	80009	131-1031-00
					(ATTACHING PARTS FOR EACH)		
-77	210-0779-00			1	. RIVET,TUBULAR:0.051 OD X 0.115 INCH LONG	42838	RA-29952715
					- - - * - - -		
-78	386-2376-00			1	. PLATE,LEVER MTG:SLIDE SWITCH	80009	386-2376-00
-79	210-0657-01			2	. EYELET,METALLIC:0.089 OD X 0.218 INCH LONG	80009	210-0657-01
	105-0401-00			1	. ACTUATOR,SWITCH:	80009	105-0401-00
-81	351-0355-00			1	. . GUIDE,SW SLIDE:	80009	351-0355-00
-82	214-1126-00			-	. . SPRING,FLAT:GOLD COLORED	80009	214-1126-00
	214-1126-01			-	. . SPRING,FLAT:GREEN COLORED	80009	214-1126-01
	214-1126-02			-	. . SPRING,FLAT:RED COLORED	80009	214-1126-02
-83	214-1127-00			2	. . ROLLER,DETENT:0.125 DIA X 0.125 INCH L	80009	214-1127-00
-84	376-0142-00			1	. . ADPT,SHAFT,CPLG:SLIDE TO SHAFT	80009	376-0142-00
	213-0048-00			1	. . SETSCREW:4-40 X 0.125 INCH,HEX SOC STL	74445	OBD
-85	105-0418-00			1	. . ACTUATOR,SWITCH:	80009	105-0418-00
-86	351-0355-00			1	. . GUIDE,SW SLIDE:	80009	351-0355-00
-87	214-1126-00			-	. . SPRING,FLAT:GOLD COLORED	80009	214-1126-00
	214-1126-01			-	. . SPRING,FLAT:GREEN COLORED	80009	214-1126-01
	214-1126-02			-	. . SPRING,FLAT:RED COLORED	80009	214-1126-02
-88	214-1127-00			2	. . ROLLER,DETENT:0.125 DIA X 0.125 INCH L	80009	214-1127-00
-89	376-0142-00			1	. . ADPT,SHAFT,CPLG:SLIDE TO SHAFT	80009	376-0142-00
	213-0048-00			1	. . SETSCREW:4-40 X 0.125 INCH,HEX SOC STL	74445	OBD
	105-0399-00			2	. ACTUATOR,SWITCH:COUPLING	80009	105-0399-00
	----- -----			-	. . each actuator assembly includes:		
-90	105-0419-00			1	. . ACTUATOR,SWITCH:	80009	105-0419-00
-91	351-0355-00			1	. . GUIDE,SW SLIDE:	80009	351-0355-00
-92	214-1126-00			-	. . SPRING,FLAT:GOLD COLORED	80009	214-1126-00
	214-1126-01			-	. . SPRING,FLAT:GREEN COLORED	80009	214-1126-01
	214-1126-02			-	. . SPRING,FLAT:RED COLORED	80009	214-1126-02
-93	214-1127-00			2	. . ROLLER,DETENT:0.125 DIA X 0.125 INCH L	80009	214-1127-00
-94	376-0142-00			1	. . ADPT,SHAFT,CPLG:SLIDE TO SHAFT	80009	376-0142-00
-95	213-0048-00			1	. . SETSCREW:4-40 X 0.125 INCH,HEX SOC STL	74445	OBD
-96	384-1160-00			4	. EXTENSION SHAFT:3.05 INCH LONG	80009	384-1160-00
-97	214-1770-00			4	. LEVER,SLIDE SW:	80009	214-1770-00
					(ATTACHING PARTS)		
-98	354-0165-00			2	. RING,RETAINING:	97464	1000-15
					- - - * - - -		
					(ATTACHING PARTS FOR CKT BD)		
-99	211-0116-00	B010100	B099999	3	SCR,ASSEM WSHR:4-40 X 0.312 INCH,PNH BRS	83385	OBD
	386-2660-00	B100000		1	SUPPORT,CKT CD:PLASTIC	80009	386-2660-00
	211-0116-00	B100000	B119999	4	SCR,ASSEM WSHR:4-40 X 0.312 INCH,PNH BRS	83385	OBD
	211-0116-00	B120000		4	SCR,ASSEM WSHR:4-40 X 0.312 INCH,PNH BRS	83385	OBD
	210-0551-00	B100000		1	NUT,PLAIN,HEX.:4-40 X 0.25 INCH,STL	83385	OBD
					- - - * - - -		
-100	----- -----[1]			1	CKT BOARD ASSY:TIMING A7		
	105-0366-00			1	. DRUM ASSY,CAM S:	80009	105-0366-00
-101	200-1419-00			1	. . COVER,CAM SW:	80009	200-1419-00
					(ATTACHING PARTS)		
-102	211-0008-00			6	. . SCREW,MACHINE:4-40 X 0.25 INCH,PNH STL	83385	OBD
-103	210-0004-00			6	. . WASHER,LOCK:INTL,0.12 ID X 0.26"OD,STL	78189	1204-00-00-0541C
	210-0406-00			5	. . NUT,PLAIN,HEX.:4-40 X 0.188 INCH,BRS	73743	2X12161-402
					- - - * - - -		
-104	131-0963-00			2	. . CONTACT,ELEC:GROUNDING	80009	131-0963-00
-105	354-0391-00			2	. . RING,RETAINING:0.395"FREE ID X 0.025" STL	97464	3100-43-CD
-106	401-0081-02			1	. . BEARING,CAM SW:FRONT	80009	401-0081-02
-107	214-1139-00			-	. . SPRING,FLAT:GOLD COLORED	80009	214-1139-00
	214-1139-02			-	. . SPRING,FLAT:GREEN COLORED GREEN COLORED	80009	214-1139-02
	214-1139-03			-	. . SPRING,FLAT:RED COLORED RED COLORED	80009	214-1139-03
-108	214-1127-00			4	. . ROLLER,DETENT:0.125 DIA X 0.125 INCH L	80009	214-1127-00
-109	105-0365-00			1	. . DRUM,CAM SWITCH:	80009	105-0365-00

[1] See Electrical Parts List for part number.

Fig. & Index No.	Tektronix Part No.	Serial/Model No. Eff	Dscont	Qty	1 2 3 4 5 Name & Description	Mfr Code	Mfr Part Number
2-110	401-0115-00			1	. . BEARING,CAM SW:CENTER	80009	401-0115-00
-111	105-0364-00			1	. . DRUM,CAM SWITCH:	80009	105-0364-00
-112	401-0081-04			1	. . BEARING,CAM SW:W/INSERT	80009	401-0081-04
-113	105-0410-00			1	. . STOP,ROT.SHAFT:CAM SWITCH	80009	105-0410-00
-114	210-0406-00			5	. . NUT,PLAIN,HEX.:4-40 X 0.188 INCH,BRS	73743	2X12161-402
					(ATTACHING PARTS FOR DRUM ASSY)		
-115	211-0116-00	B010100	B119999	6	. SCR,ASSEM WSHR:4-40 X 0.312 INCH,PNH BRS	83385	OBD
	211-0207-00	B120000		6	. SCR,ASSEM WSHR:4-40 X 0.312 INCH,PNH STL	83385	OBD
					- - - * - - -		
-116	131-0604-00			29	. CONTACT,ELEC:0.025 SQ X 0.365 INCH LONG	80009	131-0604-00
-117	----- -----[1]			1	. RES.,VAR:		
					(ATTACHING PARTS)		
-118	361-0515-00			1	. SPACER,SWITCH:PLASTIC	80009	361-0515-00
					- - - * - - -		
-119	376-0039-00			1	. ADPT,SHAFT,CPLG:0.128 AND 0.082"DIA SHAFT	80009	376-0039-00
	213-0075-00			2	. . SETSCREW:4-40 X 0.094 INCH,HEX SOC STL	70276	OBD
-120	260-1422-00			1	. SWITCH,PUSH:	80009	260-1422-00
					(ATTACHING PARTS)		
-121	361-0411-00			4	. SPACER,PUSH SW:0.13 W X 0.375 INCH L,PLSTC	71590	J64285-00
					- - - * - - -		
-122	384-1068-00			1	. EXTENSION SHAFT:8.0 INCH LONG	80009	384-1068-00
-123	352-0331-00			2	. LAMPHOLDER:	80009	352-0331-00
-124	260-1423-00			1	. SWITCH,PUSH:	80009	260-1423-00
					(ATTACHING PARTS)		
-125	361-0385-00			4	. SPACER,PB SW:0.164 INCH LONG	80009	361-0385-00
-126	136-0252-04	B010100	B187569	6	. CONTACT,ELEC:0.188 INCH LONG	22526	75060
	136-0220-00	B187570		2	. SOCKET,PLUG-IN:3 PIN,SQUARE	71785	133-23-11-034
-127	131-1261-00			28	. CONTACT,ELEC:F-SHAPED	00779	1-380953-0
					- - - * - - -		
					(ATTACHING PARTS FOR CKT BD)		
-128	211-0116-00	B010100	B119999	1	SCR,ASSEM WSHR:4-40 X 0.312 INCH,PNH BRS	83385	OBD
	211-0207-00	B120000		1	SCR,ASSEM WSHR:4-40 X 0.312 INCH,PNH STL	83385	OBD
-129	129-0386-00			1	POST,ELEC-MECH:HEX,1.593 INCH LONG	80009	129-0386-00
					- - - * - - -		
-130	384-1136-00			3	EXTENSION SHAFT:0.95 INCH LONG	80009	384-1136-00
-131	407-1128-00			1	BRKT,CRT SHIELD:REAR	80009	407-1128-00
					(ATTACHING PARTS)		
-132	211-0507-00			2	SCREW,MACHINE:6-32 X 0.312 INCH,PNH STL	83385	OBD
-133	210-0803-00			2	WASHER,FLAT:0.15 ID X 0.375 INCH OD,STL	12327	OBD
-134	210-0202-00			2	TERMINAL,LUG:SE #6	78189	2104-06-00-2520N
-135	220-0419-00			3	NUT,PLAIN,SQ:6-32 X 0.312 INCH,STL	83385	OBD
-136	211-0590-00			1	SCREW,MACHINE:6-32 X 0.25 INCH,PNH STL	83385	OBD
					- - - * - - -		
-137	200-1459-00			1	COVER,CRT:REAR	80009	200-1459-00
					(ATTACHING PARTS)		
-138	211-0008-00			2	SCREW,MACHINE:4-40 X 0.25 INCH,PNH STL	83385	OBD
					- - - * - - -		
-139	386-2246-00			1	SUPPORT,CRT:REAR	80009	386-2246-00
-140	348-0145-00			1	GROMMET,PLASTIC:U-SHP,1.0 X 0.42 INCH	80009	348-0145-00
-141	337-1644-00			1	SHLD,ELECTRICAL:CRT NECK	80009	337-1644-00
-142	----- -----[1]			1	COIL:Y AXIS		
-143	343-0217-00			1	CLAMP,COIL:Y-AXIS	80009	343-0217-00
					(ATTACHING PARTS)		
-144	211-0147-00			2	SCREW,MACHINE:4-40 X 0.25 INCH,PNH STL	83385	OBD
-145	210-0994-00			2	WASHER,FLAT:0.125 ID X 0.25" OD,STL	83385	OBD
					- - - * - - -		
-146	----- -----[1]			1	CKT BOARD ASSY:VERT OUTPUT A5		
-147	----- -----[1]			1	. INTEGRATED CKT:		
-148	407-1149-00			1	. BRKT,IC GND:	80009	407-1149-00
-149	131-0608-00			5	. CONTACT,ELEC:0.365 INCH LONG	22526	47357
-150	136-0252-01			2	. CONTACT,ELEC:0.178 INCH LONG	00779	1-332095-2

[1] See Electrical Parts List for part number.

Fig. & Index No.	Tektronix Part No.	Serial/Model No. Eff	Dscont	Qty	1 2 3 4 5 Name & Description	Mfr Code	Mfr Part Number
2-	136-0252-04			17	. CONTACT,ELEC:0.188 INCH LONG	22526	75060
					(ATTACHING PARTS)		
-151	211-0116-00			1	SCR,ASSEM WSHR:4-40 X 0.312 INCH,PNH BRS	83385	OBD
	211-0207-00	B120000		2	SCR,ASSEM WSHR:4-40 X 0.312 INCH,PNH STL	83385	OBD
-152	220-0456-00			1	NUT,PLAIN,HEX.:6-32 X 0.25 INCH,STL	73743	9038
-153	210-1092-00			1	WASHER,FLAT:0.147 ID X 0.312" OD,BRS	12327	OBD
-154	361-0008-00			3	SPACER,SLEEVE:0.11 ID X 0.25 OD X 0.28"H	80009	361-0008-00
					- - - * - - -		
-155	----- -----[1]			1	CKT BOARD ASSY:VERT MODE A4		
-156	352-0331-00			2	. LAMPHOLDER:	80009	352-0331-00
-157	260-1424-01			1	. SWITCH,PUSH:	80009	260-1424-01
					(ATTACHING PARTS)		
-158	361-0411-00			4	. SPACER,PUSH SW:0.13 W X 0.375 INCH L,PLSTC	71590	J64285-00
					- - - * - - -		
-159	131-0608-00			8	. CONTACT,ELEC:0.365 INCH LONG	22526	47357
-160	136-0252-04	B010100	B187569	12	. CONTACT,ELEC:0.188 INCH LONG	22526	75060
	136-0220-00	B187570		4	. SOCKET,PLUG-IN:3 PIN,SQUARE	71785	133-23-11-034
-161	175-0828-00			ft	. WIRE,ELECTRICAL2.833 FT 5 WIRE RIBBON	23499	TEK-175-0828-00
					(ATTACHING PARTS)		
-162	211-0116-00	B010100	B119999	6	SCR,ASSEM WSHR:4-40 X 0.312 INCH,PNH BRS	83385	OBD
	211-0207-00	B120000		6	SCR,ASSEM WSHR:4-40 X 0.312 INCH,PNH STL	83385	OBD
					- - - * - - -		
-163	----- -----[1]			1	CKT BOARD ASSY:VERT PREAMP A3		
	105-0421-00			1	. ACTUATOR,SWITCH:	80009	105-0421-00
-164	105-0420-00			1	. . ACTUATOR,SWITCH:	80009	105-0420-00
-165	214-1779-00			1	. . SPRING,HLCPS:0.156 OD X 0.844 INCH LONG	80009	214-1779-00
-166	351-0359-00			1	. . GUIDE,SW SLIDE:	80009	351-0359-00
	105-0423-00			1	. ACTUATOR,SWITCH:	80009	105-0423-00
-167	213-0048-00			1	. . SETSCREW:4-40 X 0.125 INCH,HEX SOC STL	74445	OBD
-168	376-0146-00			1	. . CPLG,SHAFT,RGD:FOR 0.125 INCH DIA SHAFT	80009	376-0146-00
-169	105-0422-00			1	. . ACTUATOR,SWITCH:	80009	105-0422-00
-170	351-0355-00			1	. . GUIDE,SW SLIDE:	80009	351-0355-00
-171	214-1126-00			-	. . SPRING,FLAT:GOLD COLORED	80009	214-1126-00
	214-1126-01			-	. . SPRING,FLAT:GREEN COLORED	80009	214-1126-01
	214-1126-02			-	. . SPRING,FLAT:RED COLORED	80009	214-1126-02
-172	214-1127-00			2	. . ROLLER,DETENT:0.125 DIA X 0.125 INCH L	80009	214-1127-00
-173	131-0344-00			2	. TERMINAL,STUD:BIFURCATED	88245	421837-9
-174	358-0176-00			2	. INSULATOR,BSHG:	88245	421472
-175	131-1003-00			9	. CONNECTOR BODY,:CKT BD MT,3 PRONG	80009	131-1003-00
-176	200-0945-01			6	. COVER,HALF XSTR:FOR DUAL TO-18 CS,2-56 THD	80009	200-0945-01
-177	200-0945-00			6	. COVER,HALF XSTR:FOR DUAL TO-18 CASE	80009	200-0945-00
					(ATTACHING PARTS FOR EACH)		
-178	211-0062-00			1	. SCREW,MACHINE:2-56 X 0.312 INCH,RDH STL	83385	OBD
					- - - * - - -		
-179	136-0252-01			2	. CONTACT,ELEC:0.178 INCH LONG	00779	1-332095-2
	136-0252-04			153	. CONTACT,ELEC:0.188 INCH LONG	22526	75060
-180	352-0134-00	B010100	B119999	1	. HOLDER,COIL:TOROIDAL,0.472 X 0.417 INCH	80009	352-0134-00
	352-0086-00	B120000		1	. HOLDER,coil		
-181	214-0506-00	B010100	B119999X	1	. CONTACT,ELEC:0.045 SQ X 0.375 INCH L	80009	214-0506-00
-182	214-0579-00			12	. TERM.,TEST PT:0.40 INCH LONG	80009	214-0579-00
-183	131-0608-00	B010100	B109999X	1	. CONTACT,ELEC:0.365 INCH LONG	22526	47357
-184	131-1030-00			4	. CONTACT ASSY,EL:CAM SWITCH,BOTTOM	80009	131-1030-00
	131-1031-00			5	. CONTACT ASSY,EL:CAM SWITCH,TOP	80009	131-1031-00
-185	210-0779-00			6	. RIVET,TUBULAR:0.051 OD X 0.115 INCH LONG	42838	RA-29952715
-186	260-1208-00			1	. SWITCH,PUSH:DPDT	80009	260-1208-00
					(ATTACHING PARTS)		
-187	361-0411-00			2	. SPACER,PUSH SW:0.13 W X 0.375 INCH L,PLSTC	71590	J64285-00
					- - - * - - -		
-188	----- -----[1]			2	. RES.,VARIABLE:		
-189	----- -----[1]			2	. RES.,VARIABLE:W/SWITCH		
					(ATTACHING PARTS FOR EACH)		
	361-0607-00	XB120000		2	. SPACER,SWITCH:PLASTIC	80009	361-0607-00
-190	361-0515-00			1	. SPACER,SWITCH:PLASTIC	80009	361-0515-00
					- - - * - - -		

[1] See Electrical Parts List for part number.

Fig. & Index No.	Tektronix Part No.	Serial/Model No. Eff	Dscont	Qty	1 2 3 4 5 Name & Description	Mfr Code	Mfr Part Number
2-					(ATTACHING PARTS FOR CKT BD)		
-191	211-0116-00	B010100	B119999	2	SCR,ASSEM WSHR:4-40 X 0.312 INCH,PNH BRS	83385	OBD
	211-0207-00	B120000		2	SCR,ASSEM WSHR:4-40 X 0.312 INCH,PNH STL	83385	OBD
					- - - * - - -		
-192	384-1059-00			4	EXTENSION SHAFT:6.58 INCH LONG	80009	384-1059-00
-193	384-1162-00			1	EXTENSION SHAFT:11.42 INCH LONG,W/KNOB	80009	384-1162-00
-194	384-1129-00			6	EXTENSION SHAFT:5.607 INCH LONG	80009	384-1129-00
-195	384-1149-00			2	EXTENSION SHAFT:7.0 INCH LONG	80009	384-1149-00
-196	384-1180-00			2	EXTENSION SHAFT:6.40 INCH LONG	80009	384-1180-00
-197	376-0029-00			2	CPLG,SHAFT,RGD:0.128 ID X 0.312 OD X 0.5"L	80009	376-0029-00
	----- -----			-	. each coupling includes:		
	213-0075-00			2	. SETSCREW:4-40 X 0.094 INCH,HEX SOC STL	70276	OBD
-198	376-0051-00			2	CPLG,SHAFT,FLEX:FOR 0.125 INCH DIA SHAFTS	80009	376-0051-00
	----- -----			-	. each coupling includes:		
	213-0022-00			2	. SETSCREW:4-40 X 0.188 INCH,HEX SOC STL	74445	OBD
-199	346-0102-00			1	STRAP,GROUNDING:	80009	346-0102-00
					(ATTACHING PARTS)		
-200	211-0116-00	B010100	B119999	1	SCR,ASSEM WSHR:4-40 X 0.312 INCH,PNH BRS	83385	OBD
	211-0207-00	B120000		1	SCR,ASSEM WSHR:4-40 X 0.312 INCH,PNH STL	83385	OBD
					- - - * - - -		
-201	210-0261-00	B010100	B175399	1	TERMINAL,LUG:0.270 INCH DIA,SE	80009	210-0261-00
	210-0994-00	B175400		1	WASHER,FLAT:0.125 ID X 0.25" OD,STL	83385	OBD
	672-0416-00	B175400		2	CKT BOARD ASSY:CH1,CH2 ATTEN A1 AND A2	80009	672-0416-00
					(ATTACHING PARTS FOR EACH)		
-202	211-0116-00	B010100	B119999	3	SCR,ASSEM WSHR:4-40 X 0.312 INCH,PNH BRS	83385	OBD
	211-0207-00	B120000		3	SCR,ASSEM WSHR:4-40 X 0.312 INCH,PNH STL	83385	OBD
-203	210-0586-00			3	NUT,PLAIN,EXT W:4-40 X 0.25 INCH,STL	78189	OBD
					- - - * - - -		
	----- -----			-	. EACH CKT BOARD ASSY INCLUDES:		
-204	200-1438-00			1	. COVER,CHASSIS:ATTENUATOR	80009	200-1438-00
					(ATTACHING PARTS)		
-205	213-0176-00			3	. SCR,TPG,THD FOR:2-32 X 0.156 INCH,PNH,STL	83385	OBD
-206	210-0938-00			3	. WASHER,FLAT:0.109 ID X 0.25 INCH OD,STL	75497	AN960-3
-207	211-0008-00			4	. SCREW,MACHINE:4-40 X 0.25 INCH,PNH STL	83385	OBD
-208	210-0994-00	B010100	B099999	4	. WASHER,FLAT:0.125 ID X 0.25" OD,STL	83385	OBD
	210-0851-00	B100000		4	. WASHER,FLAT:0.119 ID X 0.375 INCH OD,STL	12327	OBD
					- - - * - - -		
-209	131-0679-00	B010100	B165249	1	. CONNECTOR,RCPT,:BNC W/HARDWARE	24931	28JR168-1
	131-0679-01	B165250		1	. CONNECTOR,RCPT,:BNC W/HARDWARE	24931	28JR168-1
					(ATTACHING PARTS)		
-210	220-0569-00	B010100	B152399	1	. NUT,PLAIN,KNURL:0.50-28 X 0.235 INCH BRS	80009	220-0569-00
	220-0695-00	B152400		1	. NUT,PLAIN,DODEC:0.500-28 X 0.90 INCH,BRS	73743	OBD
-211	361-0424-00	B010100	B165249	1	. SPACER,RING:0.515 ID X 0.625 OD X 0.85"THK	80009	361-0424-00
	210-1039-00	B165250		1	. WASHER,LOCK:INT,0.521 ID X 0.625 INCH OD	24931	OBD
					- - - * - - -		
-212	441-1095-00			1	. CHAS,ELEC EQUIP:ATTENUATOR	80009	441-1095-00
					(ATTACHING PARTS)		
-213	211-0001-00			2	. SCREW,MACHINE:2-56 X 0.25 INCH,PNH STL	83385	OBD
-214	210-1008-00			2	. WASHER,FLAT:0.09 ID X 0.188" OD,BRS	12360	OBD
-215	210-0053-00			2	. WASHER,LOCK:INTL,0.092 ID X 0.175"OD,STL	83385	OBD
-216	210-0405-00			2	. NUT,PLAIN,HEX.:2-56 X 0.188 INCH,BRS	73743	2X12157-402
-217	129-0299-00			4	. POST,ELEC-MECH:HEX,0.333 INCH LONG	80009	129-0299-00
-218	211-0097-00			2	. SCREW,MACHINE:4-40 X 0.312 INCH,PNH STL	83385	OBD
-219	210-0004-00			6	. WASHER,LOCK:INTL,0.12 ID X 0.26"OD,STL	78189	1204-00-00-0541C
					- - - * - - -		
-220	----- ----- [1]			1	. CKT BOARD ASSY:ATTENUATOR		
-221	131-1030-00			6	. . CONTACT ASSY,EL:CAM SWITCH,BOTTOM	80009	131-1030-00
	131-1031-00			8	. . CONTACT ASSY,EL:CAM SWITCH,TOP	80009	131-1031-00
					(ATTACHING PARTS)		
-222	210-0779-00			8	. . RIVET,TUBULAR:0.051 OD X 0.115 INCH LONG	42838	RA-29952715
					- - - * - - -		
-223	131-1354-00			2	. . LINK,TERM.CONN:	80009	131-1354-00
-224	136-0252-00	B010100	B175399	12	. . CONTACT,ELEC:0.145 INCH LONG	00779	2-330808-7

[1]See Electrical Parts List for part number.

Fig. & Index No.	Tektronix Part No.	Serial/Model No. Eff	Dscont	Qty	1 2 3 4 5 Name & Description	Mfr Code	Mfr Part Number
2-	136-0252-01	B175400		4	. . CONTACT,ELEC:0.178 INCH LONG	00779	1-332095-2
	136-0333-00			1	. . CONTACT,ELEC:0.138 INCH LONG	00779	1-331677-4
-225	337-1406-00			1	. . SHLD,ELECTRICAL:CAM CONTACTS	80009	337-1406-00
	263-1012-00			1	. ACTR ASSY,CAM S:	80009	263-1012-00
-226	105-0243-00	B010100	B175399	1	. . ACTUATOR,SWITCH:	80009	105-0243-00
	105-0243-01	B175400	B190914	1	. . ACTUATOR,SWITCH:LEVER	80009	105-0243-01
	105-0243-00	B190915		1	. . ACTUATOR,SWITCH:	80009	105-0243-00
					(ATTACHING PARTS)		
-227	213-0214-00			1	. . SCREW,CAP SCH:2-56 X 0.375"HEX HD STL	70278	OBD
					- - - * - - -		
-228	131-0963-00			2	. . CONTACT,ELEC:GROUNDING	80009	131-0963-00
	131-1314-00	B175400	B190914X	1	. . CONTACT,ELEC:GROUNDING	80009	131-1314-00
-229	210-0406-00			2	. . NUT,PLAIN,HEX.:4-40 X 0.188 INCH,BRS	73743	2X12161-402
-230	214-1139-03			2	. . SPRING,FLAT:RED COLORED RED COLORED	80009	214-1139-03
-231	214-1127-00	B010100	B175399	2	. . ROLLER,DETENT:0.125 DIA X 0.125 INCH L	80009	214-1127-00
	214-1752-00	B175400		2	. . ROLLER,DETENT:	80009	214-1752-00
-232	401-0081-02	B010100	B175399	1	. . BEARING,CAM SW:FRONT	80009	401-0081-02
	401-0180-00	B175400		1	. . BEARING,CAM SW:FRONT	80009	401-0180-00
					(ATTACHING PARTS)		
-233	354-0391-00	B010100	B175399	1	. . RING,RETAINING:0.395"FREE ID X 0.025" STL	97464	3100-43-CD
	354-0390-00	B175400		1	. . RING,RETAINING:0.338 ID X 0.025" THK,STL	79136	5100-37MD
					- - - * - - -		
-234	384-0880-00	B175400		1	. . SHAFT,CAM SW:REAR	80009	384-0880-00
	105-0282-00	B010100	B175399	1	. . DRUM,CAM SWITCH:	80009	105-0282-00
-235	105-0282-01	B175400		1	. . DRUM,CAM SWITCH:	80009	105-0282-01
-236	210-0406-00			4	. . NUT,PLAIN,HEX.:4-40 X 0.188 INCH,BRS	73743	2X12161-402
-237	401-0115-00	B010100	B175399	1	. . BEARING,CAM SW:CENTER	80009	401-0115-00
	401-0178-00	B175400		1	. . BEARING,CAM SW:CENTER/REAR	80009	401-0178-00
					(ATTACHING PARTS)		
-238	354-0391-00	B010100	B175399	1	. . RING,RETAINING:0.395"FREE ID X 0.025" STL	97464	3100-43-CD
	354-0443-00	B175400		1	. . RING,RETAINING:0.328 FREE IDX 0.448 OD	97464	200-37
					- - - * - - -		
-239	384-0878-02	B175400		1	. . SHAFT,CAM SW:	80009	384-0878-02
	210-1189-00	XB190215		1	. . WASHER,FLAT:0.L95 ID X 0.367 INCH OD,BRS	51316	OBD
	214-2043-00	XB190215		1	. . SPRING,HLCPS:CONICAL,0.20 INCH LONG	80009	214-2043-00
-240	105-0342-00	B010100	B175399	1	. . DRUM,CAM SWITCH:	80009	105-0342-00
	105-0342-01	B175400		1	. . DRUM,CAM SWITCH:	80009	105-0342-01
-241	210-0406-00			4	. . NUT,PLAIN,HEX.:4-40 X 0.188 INCH,BRS	73743	2X12161-402
-242	214-1139-02			1	. . SPRING,FLAT:GREEN COLORED GREEN COLORED	80009	214-1139-02
	214-1139-03			1	. . SPRING,FLAT:RED COLORED RED COLORED	80009	214-1139-03
-243	214-1127-00	B010100	B175399	2	. . ROLLER,DETENT:0.125 DIA X 0.125 INCH L	80009	214-1127-00
	214-1752-00	B175400		2	. . ROLLER,DETENT:	80009	214-1752-00
-244	401-0081-02	B010100	B175399	1	. . BEARING,CAM SW:FRONT	80009	401-0081-02
	401-0180-00	B175400		1	. . BEARING,CAM SW:FRONT	80009	401-0180-00
	131-1428-00	XB100000		3	CONTACT,ELEC:GROUNDING CLIP	80009	131-1428-00
					(ATTACHING PARTS FOR EACH)		
	211-0012-00	XB100000		1	SCREW,MACHINE:4-40 X 0.375 INCH,PNH STL	83385	OBD
	166-0030-00	XB100000		1	SPACER,SLEEVE:0.25 OD X 0.188 INCH LONG	80009	166-0030-00
					- - - * - - -		
-245	337-1804-00			2	SHLD,ELECTRICAL:ATTENUATOR	80009	337-1804-00
-246	175-0825-00			FT	WIRE,ELECTRICAL:2 WIRE RIBBON,29.5 INCH LONG	23499	TEK-175-0825-00
-247	175-0826-00			FT	WIRE,ELECTRICAL:3 WIRE RIBBON,3.5 INCH L	08261	TEK-175-0826-00
-248	175-0827-00			FT	WIRE,ELECTRICAL:4 WIRE RIBBON,4 INCH LONG	08261	TEK-175-0827-00
-249	175-0828-00			FT	WIRE,ELECTRICAL:5 WIRE RIBBON,13 INCH L	23499	TEK-175-0828-00
-250	175-0831-00			FT	WIRE,ELECTRICAL:8 WIRE RIBBON,10.25 INCH LONG	08261	TEK-175-0831-00
-251	210-0774-00			3	EYELET,METALLIC:0.152 OD X 0.245 INCH L,BRS	80009	210-0774-00
-252	210-0775-00			3	EYELET,METALLIC:0.126 OD X 0.23 INCH L,BRS	80009	210-0775-00
-253	131-0707-00			46	CONTACT,ELEC:0.48"L,22-26 AWG WIRE	22526	47439
	131-0371-00			2	CONTACT,ELEC:FOR NO.26 AWG WIRE	98278	12093-8
-254	131-0472-01			4	CONTACT,ELEC:FEMALE	80009	131-0472-01
-255	352-0169-00			4	CONN BODY,PL,EL:2 WIRE BLACK	80009	352-0169-00
-256	352-0161-00			1	CONN BODY,PL,EL:3 WIRE BLACK	80009	352-0161-00
-257	352-0162-00			1	CONN BODY,PL,EL:4 WIRE BLACK	80009	352-0162-00
-258	352-0163-00			3	CONN BODY,PL,EL:5 WIRE BLACK	80009	352-0163-00
-259	352-0166-00			2	CONN BODY,PL,EL:8 WIRE BLACK	80009	352-0166-00

For Service Manuals
MAURITRON SERVICES
8 Cherry Tree Road, Chinnor
Oxfordshire, OX9 4QY.
Tel (01844) 351694
Fax (01844) 352554
email:- mauritron@dial.pipex.com

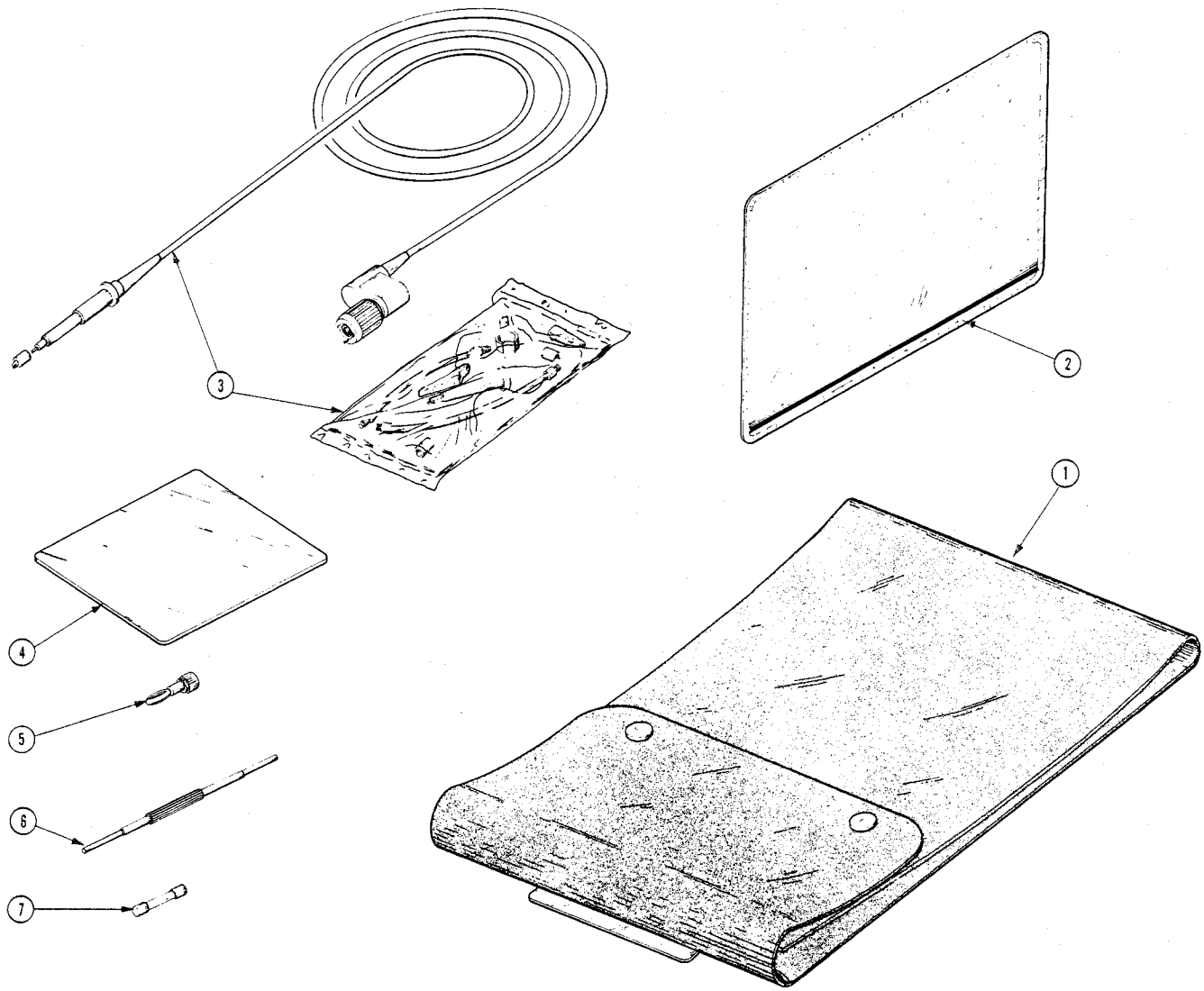

Fig. & Index No.	Tektronix Part No.	Serial/Model No. Eff	Dscont	Qty	1 2 3 4 5 Name & Description	Mfr Code	Mfr Part Number
-1	016-0535-02			1	POUCH,ACCESSORY:W/HARDWARE,STANDARD	80009	016-0535-02
-2	016-0537-00			1	POUCH,ACCESSORY:VINYL,W/ZIPPER	05006	OBD
-3	010-6065-03	B010100	B162999	2	PROBE,PACKAGE:6 FOOT	80009	010-6065-03
	010-6065-13	B163000		2	PROBE,PACKAGE:6 FOOT	80009	010-6065-13
-4	337-1674-01			1	SHLD,IMPLOSION:CLEAR	80009	337-1674-01
-5	134-0016-01			1	PLUG,TIP:W/BINDING POST	80009	134-0016-01
-6	003-0301-00			1	ALIGN,TOOL,ELEK:	04941	2543
-7	159-0016-00			2	FUSE,CARTRIDGE:3AG,1.5A,250V,FAST-BLOW	71400	AGC 1 1/2
	159-0042-00			2	FUSE,CARTRIDGE:3AG,0.75A,250V,FAST-BLOW	71400	AGC 3/4
	070-1330-00			1	MANUAL,TECH:INSTRUCTION	80009	070-1330-00
	070-1331-00			1	MANUL,TECH:OPERATORS	80009	070-1331-00

TEKTRONIX®
committed to technical excellence

MANUAL CHANGE INFORMATION

PRODUCT 465 Service
EFF SN B199820-up

CHANGE REFERENCE M21,153
DATE 6-27-74

CHANGE:	DESCRIPTION

ELECTRICAL PARTS LIST AND SCHEMATIC CHANGES

CHANGE TO:

C1404	290-0149-00	5 μF, EMT, 150 V
Q1244	151-0190-00	Silicon, NPN, 2N3904

ADD:

L507	108-0655-00	75 nH

(L507 is added in series with R507 and J571-S510-S610 junction located on Diagram 5 A & B Trigger Generator)

TEKTRONIX®
committed to technical excellence

MANUAL CHANGE INFORMATION

PRODUCT 465
EFF SN B198434

CHANGE REFERENCE M22,308
DATE 6-10-74

CHANGE:	DESCRIPTION

ELECTRICAL PARTS LIST AND SCHEMATIC CHANGES

ADD:

C354	283-0004-00	0.02 μF, Cer, 150 V

C354 is added from one end of T354 to ground located on Diagram 3 VERTICAL SWITCHING CKT.

TEKTRONIX®
committed to technical excellence

MANUAL CHANGE INFORMATION

PRODUCT 465 Service
EFF SN B199500-up

CHANGE REFERENCE S21,968
DATE 8-12-74 REVISED 3-2-76

CHANGE:	DESCRIPTION

ELECTRICAL PARTS LIST AND SCHEMATIC CHANGES

(Also applies to text page 5-38)

CHANNEL 2 X100 Attenuator

CHANGE: C10 to read C60

C11 to read C61

CHANNEL 2 X10 Attenuator

CHANGE: C12 to read C62

C13 to read C63

TEKTRONIX®
committed to technical excellence

MANUAL CHANGE INFORMATION

PRODUCT GENERAL

CHANGE REFERENCE S23,351

DATE 6-10-76 REV.

CHANGE:	DESCRIPTION

This applies to all instruments with detachable cord.

WARNING

To avoid electrical shock or equipment damage, be sure to replace the cord set only with another of the same polarity.

Power Cord Conductor Identification

Conductor	Color	Alternate Color
Ungrounded (Line)	Brown	Black
Grounded (Neutral)	Blue	White
Grounding (Earthing)	Green-Yellow	Green-Yellow

TEKTRONIX®
committed to technical excellence

MANUAL CHANGE INFORMATION

PRODUCT 465

CHANGE REFERENCE C3/674

DATE 6-7-74

CHANGE:	DESCRIPTION

SCHEMATIC DIAGRAM 10

CHANGE: Voltage to pin 12 of V1440 (CRT) to read -150 V.

ADD: Voltage for pin 4 of V1440 to read -1700 V.

ADD: Blue line history circuit number at R1460A to read R1460.

NOTE: Schematic details for instruments with SN below B080000 are located on apron at left of main diagram 10.

TEKTRONIX®
committed to technical excellence

MANUAL CHANGE INFORMATION

PRODUCT 465 Service
070-1330-00

CHANGE REFERENCE C4/376
DATE 3-2-76

CHANGE:	DESCRIPTION

ALL SN BELOW B250000
UNLESS OTHERWISE NOTED DIAGRAM SECTION AND INSERT CORRECTIONS

Diagram 1

CHANGE: The arrow from OV at collector of Q164 to point to emitter of Q164.

Diagram 4 (in main diagram section)

CHANGE: Value of C424 to 0.22 for SNB010895-up.

Fig. 7-11A (Back of Diagram 4)

ADD: L507 at bottom end of R507 for SN B199820-up.

ADD: C678 below R689-R679 (selected, added if necessary)

Diagram 5

ADD: Blue line in place of R608 for SN below B120000.

ADD: Polarity signs for C655, + at ground end, - at top end.

Fig. 7-14A (back of Diagram 7)

ADD: DS1588 above and left of C835 (All SN)

Fig. 7-17A (back of Diagram 9)

REMOVE: *C1469 (this component was removed before SNB080000 and should only show on Fig. 7-17B)

CHANGE: C1447 to C1449, C1449 to C1442, C1445 to C1447 and C1442 to C1445. (all SN)

NOTE: R1460B may be marked on board as R1434.

Diagram 10

NOTE: R1460B may be marked R1434 on circuit board.

Fig. 7-18A (back of Diagram 10)

REMOVE: The R1596 circuit number located above C1596 (the real R1596 is shown below C1597).

CHANGE:	DESCRIPTION

Fig. 7-21A (back of Diagram 11)

ADD: Q1566 at left of Q1564.

NOTE: Q1566, Q1534 and Q1546 are mounted on the chassis (this applies for Fig. 7-21B also).

CHANGE: C2522 to read C1522.

Diagram 4 (part of M20,159 insert)

CHANGE: P400 to read P4400.

CHANGE: VR4464 polarity, (anode connects to ground)

Insert M20,159/573

Page 5 Step 21, part b.

NOTE: R426 (R4426) was removed at SN B190000.

Page 18 Step 26, part e.

NOTE: R426 (R4426) was removed at SN B190000.

Vertical Output Amplifier Circuit Description

The Vertical Output Amplifier is a three-stage paraphase amplifier. The first stage consists of transistors Q402, Q406, Q412 and Q416. The low-frequency compensation network, a portion of the high-frequency compensation network, and the Vert Out Center adjustment are in this stage. The next stage consists of transistors Q432, Q462, Q442 and Q472 with a thermal compensation network consisting of thermistor RT448, resistor R453 and varicap CR434 and capacitor C444 plus the remaining high-frequency compensation network. The final stage consists of transistors Q468, Q482, Q478 and Q492 with a gain adjustment R466. Capacitors C464 and C474 are built into the printed circuit board by lead and run capacitance.

BEAM FINDER

The BEAM FINDER switch, when pressed, limits the current to the emitters of transistors Q432 and Q442. This reduces the gain of the total stage, limiting the display to the display area without affecting the position of the display.

NOTE

The 670-3023-00 Vertical Output circuit board was marked with 400 series circuit numbers. When the board number changed to 670-3023-01 at SN B150000 all circuit numbers were changed to 4400 series by adding a digit 4 between the alpha and first existing numeric; for example, C402 changed to C4402. Parts list and schematic have been updated to show the 4400 series numbers to avoid confusion with circuit numbering of the earlier 670-2238-00 Vertical Output board which used 400 series circuit numbers. For circuit description, calibration procedure, and early 670-3023- boards, a 400 series number is the same as the 4400 series equivalent now listed in the schematic and parts list.

SECTION 5 PART II - SHORT-FORM CALIBRATION

VERTICAL SYSTEM CALIBRATION

7. Adjust Vertical Output Centering

   a. Connect DC Voltmeter between TP322 and TP324.

   b. Adjust CH 1 POSITION for 0 volt reading on the meter.

   c. ADJUST - Vertical Output Centering, R418, to position the trace to the center graticule line.

8. Check BEAM FIND Operation

9. Adjust CH 1 Step Attenuator Balance

   a. ADJUST - CH 1 Step Atten Bal, R25, for no more than 0.2 division trace shift when switching between 5 mV, 10 mV and 20 mV.

   b. ADJUST - CH 1 Variable Balance, R120, for no more than 1 division trace shift when rotating the CH 1 VAR control through its range.

   c. Check CH 1 UNCAL light.

10. Adjust CH 2 Step Attenuator Balance

   a. ADJUST - CH 2 Step Atten Bal, R75, for no more than 0.2 division trace shift when switching between 5 mV, 10 mV, and 20 mV.

   b. ADJUST - CH 2 Variable Balance, R220, for no more than 1 division trace shift when rotating the CH 1 VAR control through its range.

c. Check CH 2 UNCAL light.

11. Check Probe Indicator Light

a. Connect a X10 probe to CH 1 input.

b. Check that the left light goes out and the right light comes on.

c. Repeat procedure for CH 2.

12. Check CH 1 and 2 INPUT COUPLING Switch

13. Adjust CH 1 and 2 Position Centering

a. VOLTS/DIV switches to 50 mV
INPUT COUPLING to AC

b. Connect a 2.4 division, 50 kHz signal from the Type 191 Medium-Frequency Constant-Amplitude Signal Generator.

c. VOLTS/DIV switch to 5 mV.

d. ADJUST - CH 1 Position Centering, R115, so the top and bottom of the display can be positioned past the center horizontal line.

e. Re-adjust R115 and R120 for minimum trace shift.

f. Repeat the above procedure for CH 2 - adjust R215.

g. Re-adjust R215 and R220 for minimum trace shift.

14. Check CH 2 Invert Balance and Operation

15. Adjust CH 1 and Vertical Output Gains

a. CH 1 VOLTS/DIV to 5 mV.

b. Connect 20 mV signal from Standard Amplitude Calibrator to CH 1 input.

c. ADJUST - CH 1 Gain, R118, for 200 mV push-pull signal between TP322 and TP324.

d. ADJUST - Vertical Output Gain, R466, for 4 divisions deflection.

e. Check all attenuator ranges for proper deflection, within 3%.

f. Check Variable Range: CH 1 VAR control must reduce a 5 division signal to less than 2 divisions.

16. Adjust CH 2 Gain

a. CH 2 VOLTS/DIV to 5 mV

b. Connect 20 mV signal from Standard Amplitude Calibrator to CH 2 input.

c. ADJUST - CH 2 Gain, R218, for 4 divisions deflection.

d. Check all attenuator ranges for proper deflection, within 3%.

e. Check Variable Range: CH 2 VAR control must reduce a 5 division signal to less than 2 divisions.

17. Check ADD Operation

a. Both VOLTS/DIV to 5 mV
Both INPUT COUPLING switches to DC

b. Connect 10 mV from Standard Amplitude Calibrator to both CH inputs.

c. Set VERT MODE to ADD.

d. Check for 4 divisions deflection, within ±3% unadjusted, or within ±0.5% adjusted.

18. Check Compression and Expansion

a. With 2 division signal, position to top and bottom of graticule.

b. Check for no more than 0.1 division of compression or expansion.

19. Check Vertical Alternate Operation on All Sweep Speeds

20. Check Vertical CHOP Operation

a. TIME/DIV to 1 μs
VERT MODE to CHOP

b. Check for blanking of transients at normal INTENSITY level.

c. Check duration of each cycle is about 4 divisions.

21. Adjust Vertical Output Low-Frequency Compensation

a. Connect the fast-rise output of the Square-Wave Generator (Type 106) to CH 1 input.

b. ADJUST - R425, R426 (Below SN B190000) for best flat-top waveform using 100 KHz signal.

22. Adjust VOLTS/DIV Compensation

a. Adjust CH 1 VOLTS/DIV Compensation for no more than 2% aberrations. Use 20 picofarad Normalizer and a 5 division signal at 1 KHz.

5 mV	C1
10 mV	Check
20 mV	Check
50 mV	C12, C13
.1 V	Check
.2 V	Check
.5 V	C10, C11
1 V	Check
2 V	Check
5 V	Check

b. Repeat procedure for CH 2.

23. Adjust Vertical Output High-Frequency Compensation

a. VOLTS/DIV to 5 mV

A TIME/DIV to 0.05 μs

b. Adjust for a 5 division display from the Fast-Rise High-Amplitude Pulse Generator (Type 109) to CH 2 input.

c. ADJUST - C77, C83, C205, R205, C249, R249, R427, R422, C422, R438, C438, for no more than 3% aberrations and a 3.5 nanosecond, or less, risetime.

d. Check negative step aberrations, within 5%.

e. CH 2 VOLTS/DIV to 10 mV

f. ADJUST - R97, C97, for aberrations within 3% and 3.5 nanosecond, or less, risetime.

g. Check negative step aberrations, within 5%.

h. CH 2 VOLTS/DIV to 20 mV

i. ADJUST - R98, C98, for aberrations within 3% and 3.5 nanosecond, or less, risetime.

j. Check negative step aberrations, within 5%.

k. Check remaining settings of CH 2 VOLTS/DIV switch for: Positive step aberrations within 3%; risetime of 3.5 nanoseconds, or less; negative step aberrations within 5%.

l. Check position effect: Positive step aberrations within 5%, negative step aberrations within 7%.

24. Adjust CH 1 High-Frequency Compensation

a. Repeat step 23-c with adjustments C27, C33, C105, R105, C122, R122, C149, and R149.

b. Adjust R47, C47 for step 23-f.

c. Adjust R48, C48 for step 23-i.

25. Check Vertical Amplifier Bandwidth

a. Use the High-Frequency Constant-Amplitude Signal Generator (067-0532-01): 5 division display of 3 MHz reference signal.

b. From 5 mV to 5 V settings of both VOLTS/DIV switches, check frequency is at least 100 MHz ($0^{o}C$ to $+ 40^{o}C$) when display is reduced to 3.5 division.

26. Check Cascaded Bandwidth and Sensitivity

a. Connect CH 1 OUT to CH 2 input through a terminated cable.

b. Check sensitivity is at least 1 mV/division.

c. Check Bandwidth is at least 50 MHz.

27. Check Vertical Channel Isolation and CMRR

    a. Channel isolation: at least 100:1 at 25 MHz.

    b. CMRR: at least 10:1 at 20 MHz for signals of 6 divisions or less.

28. Check Bandwidth Limit Operation

    a. Connect 6 division display of a 50 kHz signal to CH 1 input.

    b. Check frequency is 20 MHz, within 4 MHz, when display is reduced to 4.2 divisions.

SECTION 5 PART III - CALIBRATION

VERTICAL SYSTEM CALIBRATION

9. Adjust Vertical Output Centering and Check BEAM FIND
   a. Connect the DC Voltmeter between TP322 and TP324 (see Fig. 5-8).
   b. Adjust the CH 1 POSITION control for 0 volt reading on the meter.
   c. ADJUST - Vertical Output Centering adjustment, R418, to position the trace to the center graticule line.
   d. Remove the DC Voltmeter lead connections.
   e. Position the trace off-screen with the CH 1 POSITION and horizontal POSITION controls.
   f. Push the BEAM FIND button and hold it in.
   g. CHECK - That the trace is brought into the CRT viewing area.
   h. Release the BEAM FIND button.

10. Adjust CH 1 Step Attenuator Balance
   a. Set the CH 1 VOLTS/DIV switch to 20 mV and the CH 1 INPUT COUPLING switch to GND.
   b. Position the trace to the center horizontal graticule line.
   c. CHECK - CRT display for 0.2 division or less of trace shift between adjacent switch positions when rotating the CH 1 VOLTS /DIV switch from 20 mV to 5 mV.

d. ADJUST - CH 1 Step Atten Bal adjustment, R25, (see Fig. 5-10) for minimum trace shift when rotating the CH 1 VOLTS/DIV switch from 20 mV to 5 mV.

11. Adjust CH 1 Variable Volts/Division Balance

a. Position the trace to the center horizontal graticule line.

b. CHECK - That the CH 1 UNCAL light comes on when the VAR control is out of the detent position.

c. CHECK - CRT display for 1 division or less of trace shift when rotating the CH 1 VAR control through its range.

d. ADJUST - CH 1 Variable Balance adjustment, R120 (see Fig. 5-11) for minimum trace shift when rotating the CH 1 VAR control through its range.

e. Return the CH 1 VAR control to the detent position.

12. Adjust CH 1 Position Centering

a. Set the CH 1 VOLTS/DIV switch to 50 mV.

b. Connect the output of the Medium-Frequency Constant-Amplitude Signal Generator (Type 191) to the CH 1 input via a GR-to-BNC adapter, a 42-inch 50Ω BNC cable, and a 50Ω BNC termination.

For Service Manuals
MAURITRON SERVICES
8 Cherry Tree Road, Chinnor
Oxfordshire, OX9 4QY.
Tel (01844) 351694
Fax (01844) 352554
email:- mauritron@dial.pipex.com

c. Adjust the Medium-Frequency signal generator for a 2.4 division, 50 kHz output signal.

d. Switch the CH 1 VOLTS/DIV to the 5 mV setting.

e. CHECK - The top of the CRT display can be positioned below the center horizontal graticule line, and that the bottom of the display can be positioned above the center horizontal graticule line.

f. ADJUST - CH 1 Position Centering adjustment, R115, (See Fig. 5-11) so the top of the CRT display can be positioned below the center horizontal graticule line and the bottom of the display can be positioned above the center horizontal graticule line.

g. INTERACTION - Between CH 1 Position Centering and CH 1 Variable Volts/Division Balance adjustments. Readjust both until no interaction is visible.

13. Adjust CH 2 Step Attenuator Balance

a. Connect the output of the Standard Amplitude Calibrator to the CH 2 input via a 42-inch 50 Ω BNC cable.

b. Set the VERT MODE switch to CH 2; CH 2 VOLTS/DIV switch to 20 mV.

c. Position the trace to the center horizontal graticule line.

d. CHECK - CRT display for 0.2 division or less of trace shift between adjacent switch positions when rotating the CH 2 VOLTS/DIV switch from 20 mV to 5 mV.

e. ADJUST - CH 2 Step Atten Bal adjustment, R75, (See Fig. 5-12) for minimum trace shift when rotating the CH 2 VOLTS/DIV switch from 20 mV to 5 mV.

14. Adjust CH 2 Variable Volts/Division Balance

a. CHECK - That the CH 2 UNCAL light comes on when the CH 2 VAR control is out of the detent position.

b. CHECK - CRT display for 1 division or less of trace shift when rotating the CH 2 VAR control through its range.

c. ADJUST - CH 2 Variable Balance adjustment, R220, (see Fig. 5-13) for minimum trace shift when rotating the CH 2 VAR control through its range.

d. Return the VAR control to the detent position.

e. Disconnect the CH 2 test setup.

15. Adjust CH 2 Position Centering

a. Move the test signal from CH 1 to the CH 2 input.

b. Set the CH 2 VOLTS/DIV switch to 50 mV; and the VERT MODE switch to CH 2.

c. Adjust the Medium-Frequency signal generator for a 2.4 division, 50 kHz output signal.

d. Set the CH 2 VOLTS/DIV switch to 5 mV.

e. CHECK - Top of CRT display can be positioned below the center horizontal graticule line, and the bottom of the display can be positioned above the center horizontal graticule line.

f. ADJUST - CH 2 Position Centering adjustment, R215, (see Fig. 5-13) so that the top of the CRT display can be positioned below the center horizontal graticule line, and the bottom of the display can be positioned above the center horizontal graticule line.

g. INTERACTION - Between CH 2 Position Centering and CH 2 Variable Volts/Division Balance adjustments. Readjust both until no interaction occurs.

16. Check CH 2 INVERT Balance

a. Set the CH 2 INPUT COUPLING switch to GND.

b. Position the trace to the center horizontal graticule line.

c. Push the INVERT button.

d. CHECK - For less than 2 divisions of trace shift when switching from normal to inverted.

17. Check Probe Indicator Lights

a. Set both VOLTS/DIV switches to 5 mV.

b. Connect the 465's X10 probe to the CH 1 input.

c. CHECK - Light under 5 mV is extinguished and the light under 50 mV comes on.

d. Set VERT MODE switch to CH 2.

e. Move the probe to the CH 2 input.

f. CHECK - Light under 5 mV is extinguished and the light under 50 mV comes on.

g. Remove the X10 probe.

18. Check INPUT COUPLING Switches

    a. Set both INPUT COUPLING switches to DC.

    b. Connect the Standard Amplitude Calibrator output to the CH 2 input via a 42-inch 50Ω BNC cable.

    c. Adjust the Standard Amplitude Calibrator for 20 mV output.

    d. Position the bottom of the display to the center horizontal graticule line.

    e. Set CH 2 INPUT COUPLING switch to GND.

    f. CHECK - For no vertical deflection; trace is at center horizontal graticule line.

    g. Set CH 2 INPUT COUPLING switch to AC.

    h. CHECK - That display is centered about the center horizontal graticule line.

    i. Move the test signal to CH 1.

    j. Position the bottom of the display to the center horizontal graticule line.

    k. Set CH 1 INPUT COUPLING switch to GND.

    l. Repeat step 13-f.

    m. Set CH 1 INPUT COUPLING switch to AC.

    n. Repeat step 13-h.

    o. Disconnect the test setup.

19. Adjust CH 1 and Vertical Output Gains

    a. Set the VERT MODE switch to CH 1, the CH 1 VOLTS/DIV switch to 5 mV, and the CH 1 INPUT COUPLING switch to DC.

    b. Connect the output of the Standard Amplitude Calibrator to the CH 1 input via a 42-inch 50 Ω BNC cable.

    c. Adjust the Standard Amplitude Calibrator for a 20 mV output.

    d. Set the Test Oscilloscope: Vertical Mode to ADD, Channel 2 to INVERT, and both VOLTS/DIV switches to 5 mV.

e. Connect two X10 probes from the Test Oscilloscope to TP322 and TP324 on the Preamp board of the 465 (see Fig. 5-8).

f. CHECK - The Test Oscilloscope for a 200 mV (peak-to-peak) signal between TP322 and TP324.

g. ADJUST - CH 1 Gain adjustment, R118, (see Fig. 5-14) for 200 mV (peak-to-peak) display on the Test Oscilloscope. (NOTE: This is a nominal value for this adjustment and may vary from instrument to instrument.)

h. Remove the X10 probes from TP322 and TP324.

i. CHECK - CRT display for 4 divisions of deflection within 3% (0.12 division).

j. ADJUST - Vertical Output Gain adjustment, R466, for 4 divisions of deflection.

k. CHECK - Accuracy of CH 1 VOLTS/DIV switch using the settings given in Table 5-6 to see if the deflection factor accuracy for each position is within 3%.

20. Adjust CH 2 Gain

a. Set the CH 2 VOLTS/DIV switch to 5 mV, the VERT MODE switch to CH 2, and the CH 2 INPUT COUPLING switch to DC.

b. Move the test signal to CH 2 input connector.

c. Adjust the Standard Amplitude Calibrator for a 20 mV output.

d. CHECK - CRT display for 4 divisions of deflection within 3%.

e. ADJUST - CH 2 Gain adjustment, R218, (see Fig. 5-16) for 4 divisions of deflection.

f. CHECK - Accuracy of the CH 2 VOLTS/DIV switch using the settings given in Table 5-6. Deflection factor accuracy to be within 3% in all switch positions.

21. Check CH 2 and CH 1 Variable Volts/Division Ranges

a. Adjust the Standard Amplitude Calibrator for 5 divisions of deflection.

b. Rotate the CH 2 VAR control fully counterclockwise.

c. CHECK - CRT display reduces to less than 2 divisions.

d. Move the test signal to the CH 1 input connector.

e. Set the VERT MODE switch to CH 1.

f. Adjust the Standard Amplitude Calibrator for 5 divisions of deflection.

g. Rotate the CH 1 VAR control fully counterclockwise.

h. CHECK - CRT display reduces to less than 2 divisions.

i. Return the VAR controls to the detent positions.

22. Check Vertical ADD Mode Operation

a. Set both VOLTS/DIV switches to 5 mV and both INPUT COUPLING switches to DC.

b. Connect the Standard Amplitude Calibrator output to both channel inputs via a dual input coupler.

c. Adjust the Standard Amplitude Calibrator for a 10 mV output.

d. Set the VERT MODE switch to ADD.

e. CHECK - For 4 divisions of deflection, within ±3% unadjusted, or ±0.5% adjusted.

23. Check Compression and Expansion

    a. Set the CH 2 INPUT COUPLING switch to GND and the VERT MODE switch to CH 1.

    b. Adjust the CH 1 VAR control for 2 divisions of deflection centered about the center horizontal graticule line.

    c. Position the top of the display to the top graticule line.

    d. CHECK - CRT display for 0.1 division or less of compression or expansion.

    e. Position the bottom of the display to the bottom graticule line.

    f. CHECK - CRT display for 0.1 division or less of compression or expansion.

    g. Set the CH 1 VAR control to the detent position.

    h. Disconnect the test setup.

24. Check Vertical ALT Mode Operation

    a. Set the VERT MODE switch to ALT, and the A Trigger LEVEL control fully clockwise.

    b. Position the two traces 2 divisions apart.

    c. CHECK - That the sweeps alternate at all settings of the A TIME/DIV switch except X-Y.

25. Check Vertical CHOP Mode Operation

    a. Set the A TIME/DIV switch to 1 μs, the A SOURCE switch to NORM, the A SLOPE switch to +, the VERT MODE switch to CHOP, and both INPUT COUPLING switches to GND.

    b. Position the two traces about 4 divisions apart.

23. Check Compression and Expansion

    a. Set the CH 2 INPUT COUPLING switch to GND and the VERT MODE switch to CH 1.

    b. Adjust the CH 1 VAR control for 2 divisions of deflection centered about the center horizontal graticule line.

    c. Position the top of the display to the top graticule line.

    d. CHECK - CRT display for 0.1 division or less of compression or expansion.

    e. Position the bottom of the display to the bottom graticule line.

    f. CHECK - CRT display for 0.1 division or less of compression or expansion.

    g. Set the CH 1 VAR control to the detent position.

    h. Disconnect the test setup.

24. Check Vertical ALT Mode Operation

    a. Set the VERT MODE switch to ALT, and the A Trigger LEVEL control fully clockwise.

    b. Position the two traces 2 divisions apart.

    c. CHECK - That the sweeps alternate at all settings of the A TIME/DIV switch except X-Y.

25. Check Vertical CHOP Mode Operation

    a. Set the A TIME/DIV switch to 1 μs, the A SOURCE switch to NORM, the A SLOPE switch to +, the VERT MODE switch to CHOP, and both INPUT COUPLING switches to GND.

    b. Position the two traces about 4 divisions apart.

c. Adjust the A LEVEL control for a stable display.

d. CHECK - For complete blanking of switching transients between chopped segments (see Fig. 5-17).

e. CHECK - Duration of each cycle is about four divisions.

26. Adjust Vertical Output Low-Frequency Compensation

a. Set the A TIME/DIV switch to 20 μs, the VERT MODE switch to CH 1, both INPUT COUPLING switches to DC, and both VOLTS/DIV switches to 5 mV.

b. Connect the fast-rise output of the Square-Wave Generator (Type 106) to the CH 1 input via a GR-to-BNC adapter, 42-inch 50 Ω BNC cable, a X10 BNC attenuator, and a 50 Ω BNC termination.

c. Adjust the Square-Wave Generator for a 5 division 100 kHz output signal.

d. CHECK - CRT display for flat-top waveform with no more than 3% overshoot or roll-off on the leading edge.

e. ADJUST - R425, R426 (Below SN B190000) for best flat-top waveform.

f. INTERACTION - Between adjustments in this step. Readjust if necessary for total optimum response.

27. Adjust CH 1 VOLTS/DIV Compensation

a. Add a 20 pf Normalizer to the test setup between the 50 Ω BNC termination and the CH 1 input.

b. Move the test setup from the fast-rise output to the high-amplitude output of the Square-Wave Generator (Type 106).

c. Adjust the Square-Wave Generator for a five division 1 kHz display. Add or remove attenuators as necessary to maintain a five division display throughout this step.

d. CHECK - CRT display for flat-top waveform with no more than 2% overshoot or roll-off on the leading edge.

e. ADJUST - C1 (see Fig. 5-19) with a low-capacitance screwdriver, for best flat-top waveform.

f. Set the CH 1 VOLTS/DIV switch to 50 mV.

g. CHECK - CRT display for flat-top waveform with no more than 2% overshoot or roll-off on the leading edge.

h. ADJUST - Channel 1 C13 (see Fig. 5-19) for best flat-top waveform, and Channel 1 C12 for the best corner with a low-capacitance screwdriver.

i. CAL AID - Remove the 20 pf Normalizer when adjusting or checking the corner response.

j. INTERACTION - Between Channel 1's C13 and C12. Readjust both for total optimum response.

k. Set the CH 1 VOLTS/DIV switch to 0.5V.

l. CHECK - CRT display for flat-top waveform with no more than 2% overshoot or roll-off on the leading edge.

m. ADJUST - Channel 1 C11 (see Fig. 5-19) for best flat-top waveform, and Channel 1 C10 for the best corner, with the low-capacitance screwdriver.

n. Set the CH 1 VOLTS/DIV switch to 5 V.

o. CHECK - CRT display for flat-top waveform with no more than 2% overshoot or roll-off on the leading edge.

18. Check INPUT COUPLING Switches

    a. Set both INPUT COUPLING switches to DC.

    b. Connect the Standard Amplitude Calibrator output to the CH 2 input via a 42-inch 50Ω BNC cable.

    c. Adjust the Standard Amplitude Calibrator for 20 mV output.

    d. Position the bottom of the display to the center horizontal graticule line.

    e. Set CH 2 INPUT COUPLING switch to GND.

    f. CHECK - For no vertical deflection; trace is at center horizontal graticule line.

    g. Set CH 2 INPUT COUPLING switch to AC.

    h. CHECK - That display is centered about the center horizontal graticule line.

    i. Move the test signal to CH 1.

    j. Position the bottom of the display to the center horizontal graticule line.

    k. Set CH 1 INPUT COUPLING switch to GND.

    l. Repeat step 13-f.

    m. Set CH 1 INPUT COUPLING switch to AC.

    n. Repeat step 13-h.

    o. Disconnect the test setup.

19. Adjust CH 1 and Vertical Output Gains

    a. Set the VERT MODE switch to CH 1, the CH 1 VOLTS/DIV switch to 5 mV, and the CH 1 INPUT COUPLING switch to DC.

    b. Connect the output of the Standard Amplitude Calibrator to the CH 1 input via a 42-inch 50 Ω BNC cable.

    c. Adjust the Standard Amplitude Calibrator for a 20 mV output.

    d. Set the Test Oscilloscope: Vertical Mode to ADD, Channel 2 to INVERT, and both VOLTS/DIV switches to 5 mV.

e. Connect two X10 probes from the Test Oscilloscope to TP322 and TP324 on the Preamp board of the 465 (see Fig. 5-8).

f. CHECK - The Test Oscilloscope for a 200 mV (peak-to-peak) signal between TP322 and TP324.

g. ADJUST - CH 1 Gain adjustment, R118, (see Fig. 5-14) for 200 mV (peak-to-peak) display on the Test Oscilloscope. (NOTE: This is a nominal value for this adjustment and may vary from instrument to instrument.)

h. Remove the X10 probes from TP322 and TP324.

i. CHECK - CRT display for 4 divisions of deflection within 3% (0.12 division).

j. ADJUST - Vertical Output Gain adjustment, R466, for 4 divisions of deflection.

k. CHECK - Accuracy of CH 1 VOLTS/DIV switch using the settings given in Table 5-6 to see if the deflection factor accuracy for each position is within 3%.

20. Adjust CH 2 Gain

a. Set the CH 2 VOLTS/DIV switch to 5 mV, the VERT MODE switch to CH 2, and the CH 2 INPUT COUPLING switch to DC.

b. Move the test signal to CH 2 input connector.

c. Adjust the Standard Amplitude Calibrator for a 20 mV output.

d. CHECK - CRT display for 4 divisions of deflection within 3%.

e. ADJUST - CH 2 Gain adjustment, R218, (see Fig. 5-16) for 4 divisions of deflection.

f. CHECK - Accuracy of the CH 2 VOLTS/DIV switch using the settings given in Table 5-6. Deflection factor accuracy to be within 3% in all switch positions.

21. Check CH 2 and CH 1 Variable Volts/Division Ranges

a. Adjust the Standard Amplitude Calibrator for 5 divisions of deflection.

b. Rotate the CH 2 VAR control fully counterclockwise.

c. CHECK - CRT display reduces to less than 2 divisions.

d. Move the test signal to the CH 1 input connector.

e. Set the VERT MODE switch to CH 1.

f. Adjust the Standard Amplitude Calibrator for 5 divisions of deflection.

g. Rotate the CH 1 VAR control fully counterclockwise.

h. CHECK - CRT display reduces to less than 2 divisions.

i. Return the VAR controls to the detent positions.

22. Check Vertical ADD Mode Operation

a. Set both VOLTS/DIV switches to 5 mV and both INPUT COUPLING switches to DC.

b. Connect the Standard Amplitude Calibrator output to both channel inputs via a dual input coupler.

c. Adjust the Standard Amplitude Calibrator for a 10 mV output.

d. Set the VERT MODE switch to ADD.

e. CHECK - For 4 divisions of deflection, within ±3% unadjusted, or ±0.5% adjusted.

23. Check Compression and Expansion

    a. Set the CH 2 INPUT COUPLING switch to GND and the VERT MODE switch to CH 1.

    b. Adjust the CH 1 VAR control for 2 divisions of deflection centered about the center horizontal graticule line.

    c. Position the top of the display to the top graticule line.

    d. CHECK - CRT display for 0.1 division or less of compression or expansion.

    e. Position the bottom of the display to the bottom graticule line.

    f. CHECK - CRT display for 0.1 division or less of compression or expansion.

    g. Set the CH 1 VAR control to the detent position.

    h. Disconnect the test setup.

24. Check Vertical ALT Mode Operation

    a. Set the VERT MODE switch to ALT, and the A Trigger LEVEL control fully clockwise.

    b. Position the two traces 2 divisions apart.

    c. CHECK - That the sweeps alternate at all settings of the A TIME/DIV switch except X-Y.

25. Check Vertical CHOP Mode Operation

    a. Set the A TIME/DIV switch to 1 μs, the A SOURCE switch to NORM, the A SLOPE switch to +, the VERT MODE switch to CHOP, and both INPUT COUPLING switches to GND.

    b. Position the two traces about 4 divisions apart.

c. Adjust the A LEVEL control for a stable display.

d. CHECK - For complete blanking of switching transients between chopped segments (see Fig. 5-17).

e. CHECK - Duration of each cycle is about four divisions.

26. Adjust Vertical Output Low-Frequency Compensation

a. Set the A TIME/DIV switch to 20 μs, the VERT MODE switch to CH 1, both INPUT COUPLING switches to DC, and both VOLTS/DIV switches to 5 mV.

b. Connect the fast-rise output of the Square-Wave Generator (Type 106) to the CH 1 input via a GR-to-BNC adapter, 42-inch 50 Ω BNC cable, a X10 BNC attenuator, and a 50 Ω BNC termination.

c. Adjust the Square-Wave Generator for a 5 division 100 kHz output signal.

d. CHECK - CRT display for flat-top waveform with no more than 3% overshoot or roll-off on the leading edge.

e. ADJUST - R425, R426 (Below SN B190000) for best flat-top waveform.

f. INTERACTION - Between adjustments in this step. Readjust if necessary for total optimum response.

27. Adjust CH 1 VOLTS/DIV Compensation

a. Add a 20 pf Normalizer to the test setup between the 50 Ω BNC termination and the CH 1 input.

b. Move the test setup from the fast-rise output to the high-amplitude output of the Square-Wave Generator (Type 106).

c. Adjust the Square-Wave Generator for a five division 1 kHz display. Add or remove attenuators as necessary to maintain a five division display throughout this step.

d. CHECK - CRT display for flat-top waveform with no more than 2% overshoot or roll-off on the leading edge.

e. ADJUST - C1 (see Fig. 5-19) with a low-capacitance screwdriver, for best flat-top waveform.

f. Set the CH 1 VOLTS/DIV switch to 50 mV.

g. CHECK - CRT display for flat-top waveform with no more than 2% overshoot or roll-off on the leading edge.

h. ADJUST - Channel 1 C13 (see Fig. 5-19) for best flat-top waveform, and Channel 1 C12 for the best corner with a low-capacitance screwdriver.

i. CAL AID - Remove the 20 pf Normalizer when adjusting or checking the corner response.

j. INTERACTION - Between Channel 1's C13 and C12. Readjust both for total optimum response.

k. Set the CH 1 VOLTS/DIV switch to 0.5V.

l. CHECK - CRT display for flat-top waveform with no more than 2% overshoot or roll-off on the leading edge.

m. ADJUST - Channel 1 C11 (see Fig. 5-19) for best flat-top waveform, and Channel 1 C10 for the best corner, with the low-capacitance screwdriver.

n. Set the CH 1 VOLTS/DIV switch to 5 V.

o. CHECK - CRT display for flat-top waveform with no more than 2% overshoot or roll-off on the leading edge.

28. Adjust CH 2 VOLTS/DIV Compensation

a. Set the VERT MODE switch to CH 2 and move the test signal to the CH 2 input.

b. Adjust the Square-Wave Generator (Type 106) for a five division display. Remove or add attenuators as necessary to maintain a five division display.

c. CHECK - CRT display for flat-top waveform with no more than 2% overshoot or roll-off on the leading edge.

d. ADJUST - C51 (see Fig. 5-20) with the low-capacitance screwdriver, for best flat-top waveform.

e. Set the CH 2 VOLTS/DIV switch to 50 mV.

f. CHECK - CRT display for flat-top waveform with no more than 2% overshoot or roll-off on the leading edge.

g. ADJUST - Channel 2 C13 (see Fig. 5-20) for the best flat-top waveform, and Channel 2 C12 for the best corner, with the low-capacitance screwdriver.

h. CAL AID - Remove the 20 pf Normalizer when adjusting or checking the corner response.

i. INTERACTION - Between Channel 2's C13 and C12. Readjust both for total optimum response.

j. Set the CH 2 VOLTS/DIV switch to 0.5 V.

k. CHECK - CRT display for flat-top waveform with no more than 2% overshoot or roll-off on the leading edge.

l. ADJUST - Channel 2 C11 (see Fig. 5-20) for best flat-top waveform, and Channel 2 C10 for the best corner, with the low-capacitance screwdriver.

m. INTERACTION - Between Channel 2's C11 and C10. Readjust both for optimum response.

n. Set the CH 2 VOLTS/DIV switch to 5 V.

o. CHECK - CRT display for flat-top waveform with no more than 2% overshoot or roll-off on the leading edge.

p. Disconnect the test setup.

29. Adjust Channel 2 and Vertical Output High-Frequency Compensation

a. Set both VOLTS/DIV switches to 5 mV, the VERT MODE switch to CH 2, the A TIME/DIV switch to 0.05 μs, and the A SLOPE TO +.

b. Connect the Fast-Rise High-Amplitude Pulse Generator (Type 109) to the CH 2 input via a GR-to-BNC adapter, 42-inch 50 Ω BNC cable, two X10 BNC attenuators, and a 50 Ω BNC termination.

c. Set the Pulse Generator polarity to + and the voltage range to 50 V.

d. Adjust the Pulse Generator for five divisions of deflection. Remove or add attenuators as necessary to maintain a five division display throughout this step.

e. CHECK - CRT display for risetime of 3.5 nanoseconds or less.

f. CHECK - CRT display for flat-top waveform with 3% or less of aberrations.

g. ADJUST - C77, C83, C205, R205, C249, R249, R422, C422, R438, C438 and R427, with a low-capacitance screwdriver, for the best flat-top waveform (see Fig. 5-21).

h. Set the Pulse Generator polarity to - and the 465 A SLOPE switch to -.

i. CHECK - CRT display for flat-bottom waveform with 5% or less of aberrations.

j. CAL AID - The above adjustments also affect the negative-step aberrations. Adjust for optimum response and minimum aberrations on both the positive- and negative-going steps.

k. Set the A SLOPE control to + and the Pulse Generator polarity to +.

l. Set the CH 2 VOLTS/DIV switch to 10 mV.

m. CHECK - CRT display for risetime of 3.5 nanoseconds or less.

n. CHECK - CRT display for flat-top waveform with 3% or less of aberrations.

o. ADJUST - R97 and C97 (see Fig. 5-21) for optimum risetime and aberrations.

p. Set the Pulse Generator polarity to - and the 465 A SLOPE switch to -.

q. CHECK - CRT display for best corner and flat-bottom waveform with 5% or less aberrations.

r. Set the CH 2 VOLTS/DIV switch to 20 mV and the A SLOPE switch to +.

s. Set the Pulse Generator to +.

t. CHECK - CRT display for risetime of 3.5 nanoseconds or less.

u. CHECK - CRT display for flat-top waveform with 3% or less of aberrations.

v. ADJUST - R98 and C98 (see Fig. 5-21) for optimum risetime and aberrations.

w. Set the Pulse Generator polarity to - and the 465 A SLOPE switch to -.

x. CHECK - CRT display for flat-bottom waveform with 5% or less of aberrations.

y. Set the CH 2 VOLTS/DIV switch to 50 mV.

z. Set the A SLOPE switch to + and the Pulse Generator polarity to +.

aa. CHECK - CRT display for risetime of 3.5 nanoseconds or less.

ab. CHECK - CRT display for flat-top waveform with 3% or less of aberrations.

ac. Set the Pulse Generator polarity to - and the 465 A SLOPE switch to -.

ad. CHECK - CRT display for best corner and flat-bottom waveform with 5% or less aberrations.

ae. Repeat step 29-z through 29-ad for each setting of the CH 2 VOLTS/DIV switch from 0.1 V to 5 V.

30. Check CH 2 Position Effect

a. Set the CH 2 VOLTS/DIV switch to 5 mV.

b. Adjust the Pulse Generator (Type 109) for five divisions of display.

c. Adjust the A LEVEL control for a stable display.

d. Position the top of the display to the bottom graticule line.

e. CHECK - CRT display for less than 5% aberrations.

f. Set the Pulse Generator polarity to - and the 465 A SLOPE switch to -.

g. Position the bottom of the display to the top graticule line.

h. CHECK - CRT display for less than 7% aberrations.

31. Adjust CH 1 High-Frequency Compensation

a. Move the test signal from CH 2 to the CH 1 input.

b. Set the A TIME/DIV switch to 0.05 μs, the A SLOPE switch to +, and the VERT MODE switch to CH 1.

c. Set the Fast-Rise High-Amplitude Pulse Generator (Type 109) to + and adjust the Pulse Generator for five divisions of deflection. Remove or add attenuators as necessary to maintain a five division display throughout this step.

d. CHECK - CRT display for risetime of 3.5 nanoseconds or less.

e. CHECK - CRT display for flat-top waveform with 3% or less of aberrations.

f. ADJUST - C27, C33, C105, R105, R122, C122, C149, and R149 (see Fig. 5-23) with a low-capacitance screwdriver, for the best flat-top waveform.

g. Set the Pulse Generator polarity to - and the 465 A SLOPE switch to -.

h. CHECK - CRT display for flat-bottom waveform with 5% or less of aberrations.

i. CAL AID - The above adjustments also affect the negative-step aberrations. Adjust them for optimum response and minimum aberrations on both the positive-and negative-going steps.

j. Set the A SLOPE control to + and the Pulse Generator polarity to +.

k. Set the CH 1 VOLTS/DIV switch to 10 mV.

l. CHECK - CRT display for risetime of 3.5 nanoseconds or less.

m. CHECK - CRT display for flat-top waveform with 3% or less of aberrations.

n. ADJUST - R47 and C47 (see Fig. 5-23) for optimum rise-time and aberrations.

o. Set the Pulse Generator polarity to - and the 465 A SLOPE switch to -.

p. CHECK - CRT display for best corner and flat-bottom waveform with 5% or less aberrations.

q. Set the CH 1 VOLTS/DIV switch to 20 mV and the A SLOPE switch to +.

r. Set the Pulse Generator polarity to +.

s. CHECK - CRT display for risetime of 3.5 nanoseconds or less.

t. CHECK - CRT display for flat-top waveform with 3% or less of aberrations.

u. ADJUST - R48 and C48 (see Fig. 5-23) for optimum rise-time and aberrations.

v. Set the Pulse Generator polarity to - and the 465 A SLOPE switch to -.

w. CHECK - CRT display for flat-bottom waveform with 5% or less of aberrations.

x. Set the CH 1 VOLTS/DIV switch to 50 mV.

y. Set the A SLOPE switch to + and the Pulse Generator polarity to +.

z. CHECK - CRT display for risetime of 3.5 nanoseconds or less.

aa. CHECK - CRT display for flat-top waveform with 3% or less of aberrations.

ab. Set the Pulse Generator polarity to - and the 465 A SLOPE switch to -.

ac. CHECK - CRT display for best corner and flat-bottom waveform with 5% or less aberrations.

ad. Repeat step 31-y through 31-ac for each setting of the CH 1 VOLTS/DIV switch from 0.1 V to 5 V.

32. Check CH 1 Position Effect

a. Set the CH 1 VOLTS/DIV switch to 5 mV.

b. Adjust the Pulse Generator (Type 109) for five divisions of display.

c. Adjust the A LEVEL control for a stable display.

d. Position the top of the display to the bottom graticule line.

e. CHECK - CRT display for less than 5% aberrations.

f. Set the Pulse Generator polarity to - and the 465 A SLOPE switch to -.

g. Position the bottom of the display to the top graticule line.

h. CHECK - CRT display for less than 7% aberrations.

i. Disconnect the test setup.

33. Check Vertical Amplifier Bandwidth

a. Connect the output of the High-Frequency Constant-Amplitude Signal Generator (067-0532-01) to the CH 1 input via a GR-to-BNC adapter, X10 BNC attenuator, and a 50 Ω BNC termination.

b. Set the TRIG MODE switch to AUTO, A TIME/DIV switch to 0.2 ms, both VOLTS/DIV switches to 5 mV and the VERT MODE switch to CH 1.

c. Adjust the High-Frequency signal generator output amplitude for a five division display of a 3 megahertz reference signal.

d. Without changing the output amplitude, increase the output frequency of the signal generator until the display is reduced to 3.5 divisions.

e. CHECK - Output frequency of the signal generator must be at least 100 megahertz (0°C to +40°C).

f. Repeat this bandwidth check procedure, steps 33-c through 33-e, for settings of the CH 1 VOLTS/DIV switch from 10 mV to 2 V.

For Service Manuals
MAURITRON SERVICES
8 Cherry Tree Road, Chinnor
Oxfordshire, OX9 4QY.
Tel (01844) 351694
Fax (01844) 352554
email:- mauritron@dial.pipex.com

g. Move the test signal to CH 2 input, set the VERT MODE switch to CH 2, and the CH 2 INPUT COUPLING switch to DC.

h. Repeat this bandwidth check, step 33-c through 33-e, for settings of the CH 2 VOLTS/DIV switch from 5 mV to 2 V.

i. Disconnect the test setup.

34. Check Cascaded Gain and Bandwidth

a. Set both INPUT COUPLING switches to DC, the VERT MODE switch to CH 2, both VOLTS/DIV switches to 5 mV, and the A TIME/DIV switch to 1 ms.

b. Connect the CH 1 VERT SIGNAL OUT (on the rear panel) to the CH 2 input connector via a 42-inch 50 Ω BNC cable and a 50 Ω BNC termination.

c. Connect the Standard Amplitude Calibrator to the CH 1 input via a 42-inch 50 Ω BNC cable.

d. Adjust the Standard Amplitude Calibrator for a 5 mV output.

e. CHECK - CRT display for at least five divisions of deflection.

f. Remove the test setup from the CH 1 input.

g. Connect the output of the Medium-Frequency Constant-Amplitude Signal Generator (Type 191) to the CH 1 input via a GR-to-BNC adapter, 42-inch 50 Ω BNC cable, X10 BNC attenuator, and a 50 Ω BNC termination.

h. Adjust the Medium-Frequency signal generator for a five division display of a 50 kilohertz reference signal.

i. Without changing the output amplitude of the signal generator, increase the output frequency until the display is reduced to 3.5 divisions.

j. CHECK - Output frequency of the signal generator must be at least 50 megahertz.

k. Disconnect the test setup.

35. Check Vertical Channel Isolation

a. Move the test signal to the CH 2 input after removing the X10 attenuator.

b. Set CH 2 VOLTS/DIV switch to 0.2 V, CH 1 INPUT COUPLING switch to GND, and VERT MODE switch to CH 2.

c. Adjust the Medium-Frequency signal generator for a 2 division display of a 25 megahertz signal.

d. Set both VOLTS/DIV switches to 20 mV and VERT MODE switch to CH 1.

e. CHECK - CRT display for no more than 0.2 division of deflection.

f. Move the CH 2 input test setup to the CH 1 input.

g. Set the CH 1 INPUT COUPLING switch to DC, CH 2 INPUT COUPLING switch to GND, CH 1 VOLTS/DIV switch to 0.2 V.

h. Adjust the Medium-Frequency signal generator for a 2 division display of a 25 megahertz signal.

i. Set VERT MODE switch to CH 2.

j. CHECK - CRT display for no more than 0.2 division of deflection.

k. Disconnect the test setup.

36. Check Common Mode Rejection Ratio

a. Set both VOLTS/DIV switches to 5 mV, both INPUT COUPLING switches to DC, the VERT MODE switch to CH 1, and push the CH 2 INVERT switch.

b. Connect the output of the Medium-Frequency Constant-Amplitude Signal Generator (Type 191) to the CH 1 and 2 inputs via a GR-to-BNC adapter, 42-inch 50 Ω BNC cable, X10 BNC attenuator, 50 Ω BNC termination, and a dual input coupler.

c. Adjust the Medium-Frequency signal generator for a six division display of a 50 kHz signal.

d. Set the VERT MODE switch to ADD.

e. Increase output frequency of the Medium-Frequency signal generator to 20 MHz.

f. Note the amount of vertical deflection for use in step 36-h.

g. Set the VERT MODE switch to CH 1.

h. CHECK - That the amount of vertical deflection is at least 10 times that noted in step 36-f.

i. Release the CH 2 INVERT switch and disconnect the test setup.

37. Check Bandwidth Limit Operation

a. Pull the 20 MHz BW/TRIG VIEW button to BW and set the CH 1 INPUT COUPLING switch to DC.

b. Connect the Medium-Frequency Constant-Amplitude Signal Generator (Type 191) to the CH 1 input via 42-inch 50 Ω BNC cable and a 50 Ω BNC termination.

c. Adjust the Medium-Frequency signal generator for a six division display of a 50 kilohertz signal.

d. Increase the output frequency of the signal generator until the display is reduced to 4.2 divisions.

e. CHECK - Output frequency of the signal generator is between 16 and 24 megahertz.

f. Disconnect the test setup.

ELECTRICAL PARTS LIST

Replacement parts should be ordered from the Tektronix Field Office or Representative in your area. Changes to Tektronix products give you the benefit of improved circuits and components. Please include the instrument type number and serial number with each order for parts or service.

ABBREVIATIONS AND REFERENCE DESIGNATORS

A	Assembly, separable or repairable
AT	Attenuator, fixed or variable
B	Motor
BT	Battery
C	Capacitor, fixed or variable
Cer	Ceramic
CR	Diode, signal or rectifier
CRT	cathode-ray tube
DL	Delay line
DS	Indicating device (lamp)
Elect.	Electrolytic
EMC	electrolytic, metal cased
EMT	electrolytic, metal tubular
F	Fuse
FL	Filter
H	Heat dissipating device (heat sink, etc.)
HR	Heater
J	Connector, stationary portion
K	Relay
L	Inductor, fixed or variable
LR	Inductor/resistor combination
M	Meter
Q	Transistor or silicon-controlled rectifier
P	Connector, movable portion
PMC	Paper, metal cased
PT	paper, tubular
PTM	paper or plastic, tubular molded
R	Resistor, fixed or variable
RT	Thermistor
S	Switch
T	Transformer
TP	Test point
U	Assembly, inseparable or non-repairable
V	Electron tube
Var	Variable
VR	Voltage regulator (zener diode, etc.)
WW	wire-wound
Y	Crystal

Ckt. No.	Tektronix Part No.	Serial/Model No. Eff	Disc	Description
ASSEMBLY				
	670-3023-00	XB040000	B149999	OUTPUT Circuit Board Assembly
	670-3023-01	B150000	B189999	OUTPUT Circuit Board Assembly
	670-3023-02	B190000		OUTPUT Circuit Board Assembly
CAPACITORS				
C4402	283-0032-00			470 pF, Cer, 500 V, 5%
C4412	283-0032-00			470 pF, Cer, 500 V, 5%
C4422	281-0139-00			2.5-9 pF, Var, Cer, 100 V
C4425	281-0638-00			240 pF, Cer, 500 V, 5%
C4426	281-0580-00	B010100	B189999X	470 pF, Cer, 500 V, 10%
C4427	281-0524-00			150 pF, Cer, 500 V, 20%
C4428	283-0220-00	XB100000	B189999X	0.01 µF, Cer, 50 V
C4430	283-0000-00			0.001 µF, Cer, 500 V, +100%-0%
C4432	283-0065-00			0.001 µF, Cer, 100 V, 5%
C4437	281-0629-00			33 pF, Cer, 600 V, 5%
C4438	281-0123-00			5-25 pF, Var, Cer, 100 V
C4439	281-0617-00			15 pF, Cer, 200 V, 10%
C4442	283-0065-00			0.001 µF, Cer, 100 V, 5%
C4444	281-0651-00			47 pF, Cer, 200 V, 5%
C4469	281-0500-00	B010100	B189999X	2.2 pF, Cer, 500 V, ±0.5 pF
C4481	283-0032-00	XB040000	B099999	470 pF, Cer, 500 V, 5%
C4481	283-0077-00	B100000		330 pF, Cer, 500 V
C4482	283-0000-00			0.001 µF, Cer, 500 V, +100%-0%
C4485	283-0003-00			0.01 µF, Cer, 150 V, +80%-20%
C4491	283-0032-00	XB040000	B099999	470 pF, Cer, 500 V, 5%
C4491	283-0077-00	B100000		330 pF, Cer, 500 V
C4492	283-0000-00			0.001 µF, Cer, 500 V, +100%-0%
C4498	290-0523-00			2.2 µF, Elect., 20 V, 20%
C4499	290-0523-00			2.2 µF, Elect., 20 V, 20%

M20,159/573

Ckt. No.	Tektronix Part No.	Serial/Model No. Eff	Disc	Description
DIODES				
CR4434	152-0422-00			Silicon, VVC, PG1084
CR4451	152-0141-02			Silicon, 1N4152
CR4452	152-0141-02			Silicon, 1N4152
VR4464	152-0195-00			Zener, selected from 1N751A, 0.4W, 5.1 V, 5%
VR4481	152-0395-00	XB060000	B099999	Zener, 1N749A, 0.4W, 4.3 V, 5%
VR4481	152-0195-00	B100000		Zener, 1N751A, 0.4 W, 5.1 V, 5%
VR4491	152-0395-00	XB060000	B099999	Zener, 1N749A, 0.4 W, 4.3.V, 5%
VR4491	152-0195-00	B100000		Zener, 1N751A, 0.4 W, 5.1 V, 5%
INDUCTORS				
L4402[1]	276-0507-00	XB190000		Core, ferramic suppressor
L4464	108-0570-00			75 nH
L4474	108-0570-00			75 nH
L4498	108-0440-00			8 μH
L4499	108-0440-00			8 μH
LR4483	108-0328-00			0.3 μH (wound on a 220 Ω, 1/4 W, 5%, resistor)
LR4493	108-0328-00			0.3 μH (wound on a 220 Ω, 1/4 W, 5%, resistor)
RESISTORS				
R4401	321-0068-00			49.9 Ω, 1/8 W, 1%
R4402	315-0221-00	B010100	B189999	220 Ω, 1/4 W, 5%
R4402	315-0301-00	B190000		300 Ω, 1/4 W, 5%
R4403	321-0097-00			100 Ω, 1/8 W, 1%
R4404	321-0097-00			100 Ω, 1/8 W, 1%
R4406	315-0242-00			2.4 kΩ, 1/4 W, 5%
R4408	321-0121-00	B010100	B189999	178 Ω, 1/8 W, 1%
R4408	321-0095-00	B190000		95.3 Ω, 1/8 W, 1%
R4409	321-0189-00			909 Ω, 1/8 W, 1%
R4411	321-0068-00			49.9 Ω, 1/8 W, 1%
R4412	315-0221-00	B010100	B189999	220 Ω, 1/4 W, 5%
R4412	315-0301-00	B190000		300 Ω, 1/4 W, 5%
R4413	321-0097-00			100 Ω, 1/8 W, 1%
R4414	321-0097-00			100 Ω, 1/8 W, 1%
R4416	315-0242-00			2.4 kΩ, 1/4 W, 5%
R4418	311-1237-00			1 kΩ, Var
R4419	321-0189-00			909 Ω, 1/8 W, 1%
R4421	321-0089-00			82.5 Ω, 1/8 W, 1%
R4422	311-2378-00			250 Ω, Var
R4423	315-0101-00			100 Ω, 1/4 W, 5%
R4424	315-0101-00			100 Ω, 1/4 W, 5%
R4425	311-1238-00			5 kΩ, Var
R4426	311-1228-00	B010100	B189999X	10 kΩ, Var
R4427	311-1225-00			1 kΩ, Var
R4428	315-0123-00	XB10000	B149999	12 kΩ, 1/4 W, 5%
R4428	315-0822-00	B150000	B189999X	8.2 kΩ, (nominal value) selected
R4430	323-0159-00	B010100	B189999	442 Ω, 1/2 W, 1%
R4430	323-0147-00	B190000		332 Ω, 1/2 W, 1%

[1] Added if necessary.

Ckt. No.	Tektronix Part No.	Serial/Model No. Eff	Disc	Description
RESISTORS (cont)				
R4431	317-0220-00			22 Ω, 1/8 W, 5%
R4432	315-0131-00	B010100	B189999	130 Ω, 1/4 W, 5%
R4432	315-0101-00	B190000		100 Ω, 1/4 W, 5%
R4433	323-0118-00			165 Ω, 1/2 W, 1%
R4434	315-0100-00			10 Ω, 1/4 W, 5%
R4435	321-0059-00			40.2 Ω, 1/8 W, 1%
R4436	317-0100-00			10 Ω, 1/8 W, 5%
R4437	317-0561-00	B010100	B189999	560 Ω, 1/8 W, 5%
R4437	317-0751-00	B190000		750 Ω, 1/8 W, 5%
R4438	311-1260-00			250 Ω, Var
R4440	323-0159-00	B010100	B189999	442 Ω, 1/2 W, 1%
R4440	323-0147-00	B190000		332 Ω, 1/2 W, 1%
R4441	317-0220-00			22 Ω, 1/8 W, 5%
R4442	315-0131-00	B010100	B189999	130 Ω, 1/4 W, 5%
R4442	315-0101-00	B190000		100 Ω, 1/4 W, 5%
R4443	323-0118-00			165 Ω, 1/2 W, 1%
R4444	315-0100-00			10 Ω, 1/4 W, 5%
R4445	321-0059-00			40.2 Ω, 1/8 W, 1%
R4448	315-0622-00			6.2 kΩ, 1/4 W, 5%
RT4448	307-0181-00			100 kΩ, Thermal
R4449	321-0193-00			1 kΩ, 1/8 W, 1%
R4451	315-0820-00			82 Ω, 1/4 W, 5%
R4452	315-0301-00			300 Ω, 1/4 W, 5%
R4453	323-0157-00			422 Ω, 1/2 W, 1%
R4462	321-0205-00			1.33 kΩ, 1/8 W, 1%
R4463	321-0219-00			1.87 kΩ, 1/8 W, 1%
R4464	321-0093-00			90.9 Ω, 1/8 W, 1%
R4465	321-0126-00			200 Ω, 1/8 W, 1%
R4466	311-1226-00			2.5 kΩ, Var
R4468	321-0031-00			20.5 Ω, 1/8 W, 1%
R4469	323-0072-00	B010100	B189999	54.9 Ω, 1/2 W, 1%
R4469	323-0068-00	B190000		49.9 Ω, 1/2 W, 1%
R4474	321-0093-00			90.9 Ω, 1/8 W, 1%
R4475	321-0126-00			200 Ω, 1/8 W, 1%
R4478	321-0031-00			20.5 Ω, 1/8 W, 1%
R4480	315-0100-00			10 Ω, 1/4 W, 5%
R4481	315-0820-00	XB040000	B099999	82 Ω, 1/4 W, 5%
R4481	315-0101-00	B100000	B189999	100 Ω, 1/4 W, 5%
R4481	301-0820-00	B190000		82 Ω, 1/2 W, 5%
R4483	310-0700-00			430 Ω, 4 W, WW, 1%
R4485	301-0100-00			10 Ω, 1/2 W, 5%
R4487	315-0180-00	XB190000		18 Ω, 1/4 W, 5%
R4491	315-0820-00	XB040000	B099999	82 Ω, 1/4 W, 5%
R4491	315-0101-00	B100000	B189999	100 Ω, 1/4 W, 5%
R4491	301-0820-00	B190000		82 Ω, 1/2 W, 5%
R4492	315-0820-00			82 Ω, 1/4 W, 5%
R4493	310-0700-00			430 Ω, 4 W, WW, 1%

Ckt. No.	Tektronix Part No.	Serial/Model No. Eff	Disc	Description
RESISTORS (cont)				
R4497	315-0180-00	XB190000		18 Ω, 1/4 W, 5%
R4498	315-0100-00			10 Ω, 1/4 W, 5%
R4499	315-0100-00			10 Ω, 1/4 W, 5%
TRANSISTORS				
Q4402	151-0212-00			Silicon, NPN, selected from A485
Q4406	151-0212-00			Silicon, NPN, selected from A485
Q4412	151-0212-00			Silicon, NPN, selected from A485
Q4416	151-0212-0			Silicon, NPN, selected from A485
Q4432	151-0212-00			Silicon, NPN, selected from A485
Q4442	151-0212-00			Silicon, NPN, selected from A485
Q4462	151-0434-00			Silicon, PNP, 2N4261
Q4468	151-0222-00	B010100	B189999	Silicon, NPN, selected from 2N4251
Q4468	151-0448-00	B190000		Silicon, NPN, selected from 2N5836
Q4472	151-0434-00			Silicon, PNP, 2N4261
Q4478	151-0222-00	B010100	B189999	Silicon, NPN, selected from 2N4251
Q4478	151-0448-00	B190000		Silicon, NPN, selected from 2N5836
Q4482	151-0446-00			Silicon, NPN, selected from 2N3866
Q4492	151-0446-00			Silicon, NPN, selected from 2N3866

MECHANICAL PARTS LIST

Replacement parts should be ordered from the Tektronix Field Office or Representative in your area. Changes to Tektronix products give you the benefit of improved circuits and components. Please include the instrument type number and serial number with each order for parts or service.

ABBREVIATIONS

BHB	binding head brass	h	height or high	OHB	oval head brass
BHS	binding head steel	hex.	hexagonal	OHS	oval head steel
CRT	cathode-ray tube	HHB	hex head brass	PHB	pan head brass
csk	countersunk	HHS	hex head steel	PHS	pan head steel
DE	double end	HSB	hex socket brass	RHS	round head steel
FHB	flat head brass	HSS	hex socket steel	SE	single end
FHS	flat head steel	ID	inside diameter	THB	truss head brass
Fil HB	fillister head brass	lg	length or long	THS	truss head steel
Fil HS	fillister head steel	OD	outside diameter	w	wide or width

Fig. & Index No.	Tektronix Part No.	Serial/Model No. Eff	Disc	Qty	Description 1 2 3 4 5
	- - - - - -[1]			1	CIRCUIT BOARD ASSEMBLY--OUTPUT
	- - - - - -				circuit board assembly includes:
	131-9608-00			4	TERMINAL, pin, 0.365 inch long
	136-0252-01			2	SOCKET, pin connector, 0.178 inch long
	136-0252-04			31	SOCKET, pin connector, 0.178 inch long
	129-0106-00			1	POST, metallic
	131-0761-00			1	TERMINAL POST
	214-1138-00			2	HEATSINK
	214-0368-00			2	SPRING, heatsink
	343-0097-00			2	CLAMP, transistor, heatsink, plastic
	352-0062-00			2	HOLDER, transistor, heatsink, plastic
	407-1389-00			1	BRACKET, heatsink
	211-0130-00			2	SCREW, 4-40 x 0.25 inch, HSS
	211-0033-00			4	SCREW, 4-40 x 0.312 inch, PHS
	211-0012-00			4	SCREW, 4-40 x 0.375 inch, PHS
	210-0627-00			2	RIVET
	210-0004-00			6	WASHER, lock, internal, #4
	210-0599-00			4	NUT, sleeve
	210-0406-00			8	NUT, hex., 4-40 x 0.188 inch

[1]Refer to Electrical Parts List for part number.

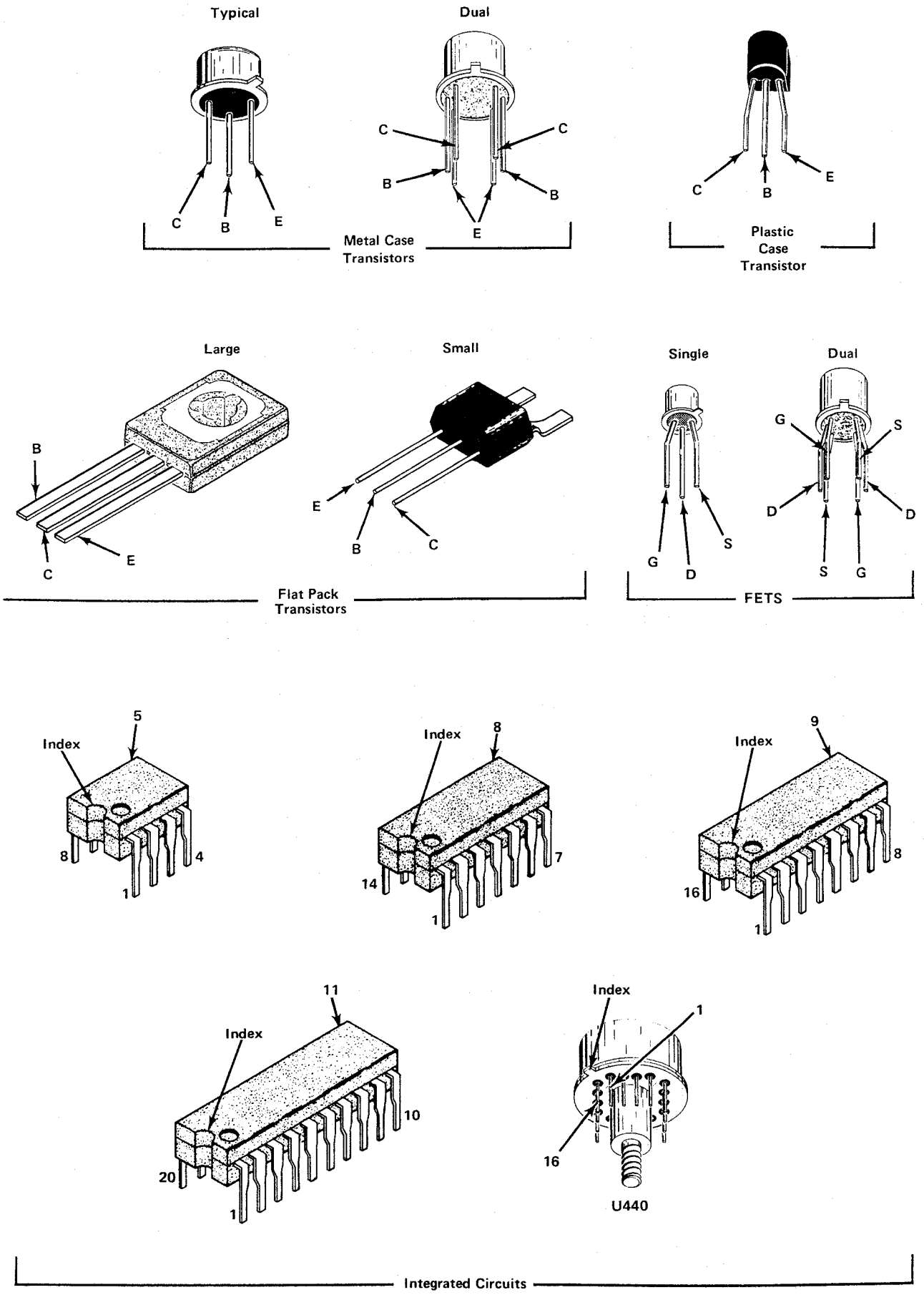

Fig. 7-1. Lead configuration for semiconductors used in this instrument.

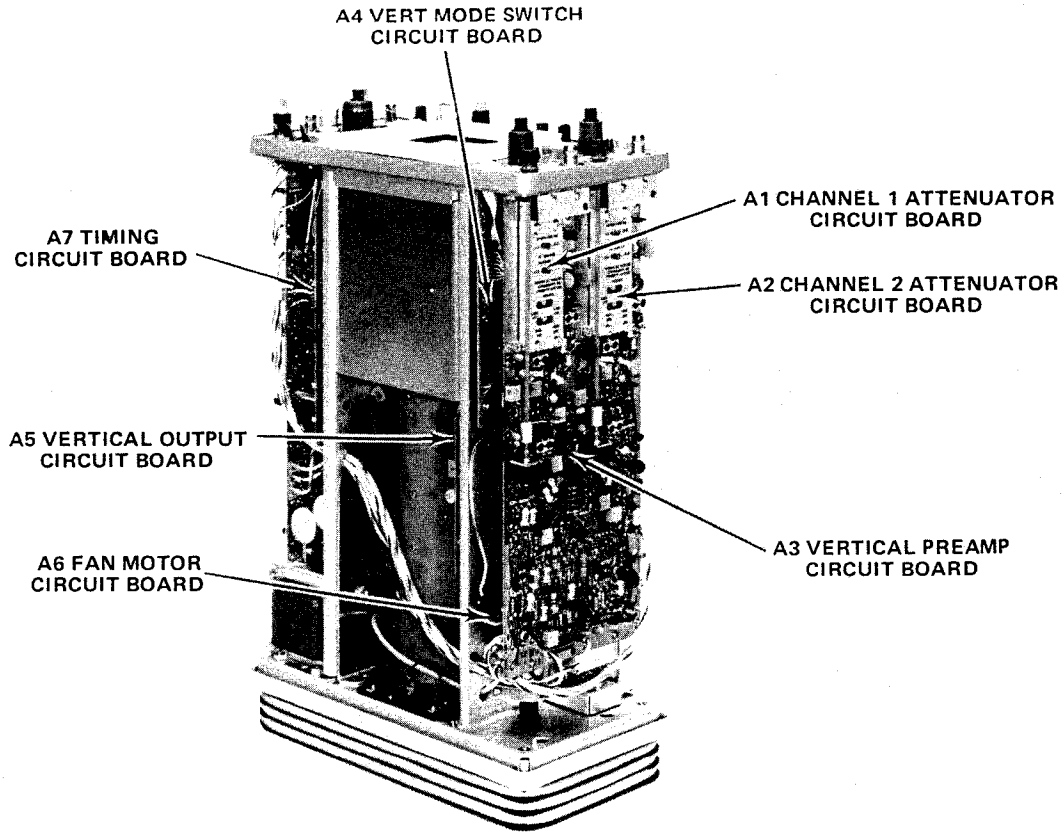

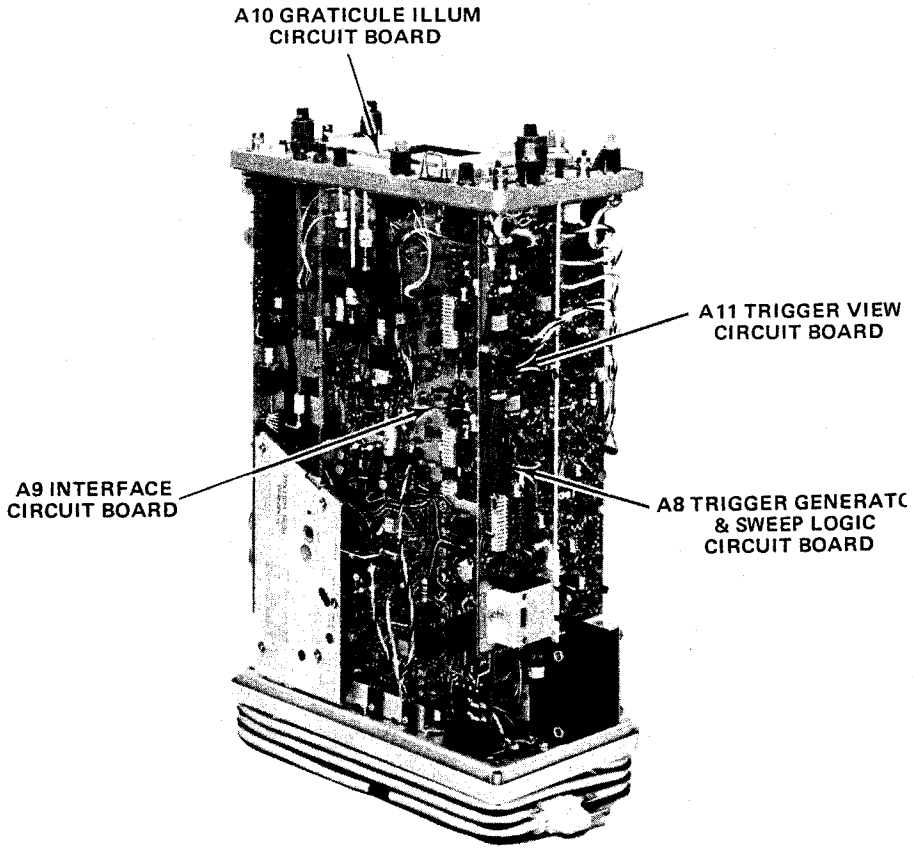

Fig. 7-2. Location of circuit boards in the 465.

VOLTAGE TEST CONDITIONS

Typical voltage measurements were obtained under the following conditions unless otherwise noted on the individu diagrams. Voltage measurements were taken with no signal applied to the vertical or trigger inputs. All voltages measure with reference to chassis ground. Voltages rounded off to nearest tenth of a volt.

	Voltmeter
Type	Digital Multimeter (for voltages up to 1 kilovolt)
	DC Voltmeter (for voltages above 1 kilovolt)
Input Impedance	10 megohms (Digital Multimeter)
	20,000 Ω/volt (DC Voltmeter)
Range	0 to 1 kilovolt (Digital Multimeter)
	0 to 3 kilovolts (DC Voltmeter)
Reference Voltage	465 Chassis Ground
Recommended type (as used for voltages on diagrams)	Tektronix DM 501 Digital Multimeter (for voltages zero to 1 kilovolt)
	Triplett Model 630NA (for voltages above 1 kilovolt)

	465 Conditions
POWER	Pulled Out (ON)
INTENSITY	Midrange, set for normal display intensity
FOCUS	Adjusted for focused trace
SCALE ILLUM	Fully clockwise
BEAM FIND	Out
Vertical Controls (both channels unless otherwise noted)	
POSITION	
CH 1	Two divisions above center
CH 2	Two divisions below center
VERT MODE	ALT
VOLTS/DIV	5 mV/Division
COUPLING	DC
INVERT	Out
20 MHz BW	In (full Bandwidth)
A Trigger Controls	
A TRIG HOLDOFF	NORM
TRIG MODE	AUTO
COUPLING	AC
SOURCE	NORM
LEVEL	Midrange
SLOPE	+
B Trigger Controls	
COUPLING	AC
SOURCE	STARTS AFTER DELAY
LEVEL	Midrange
SLOPE	+
A & B Sweep Controls	
X10 MAG	Out
POSITION (Fine & Coarse)	Midrange
HORIZ MODE	A INTEN
DELAY TIME POSITION	5.0
A TIME/DIV	1 ms
B TIME/DIV	.1 ms

Ⓐ

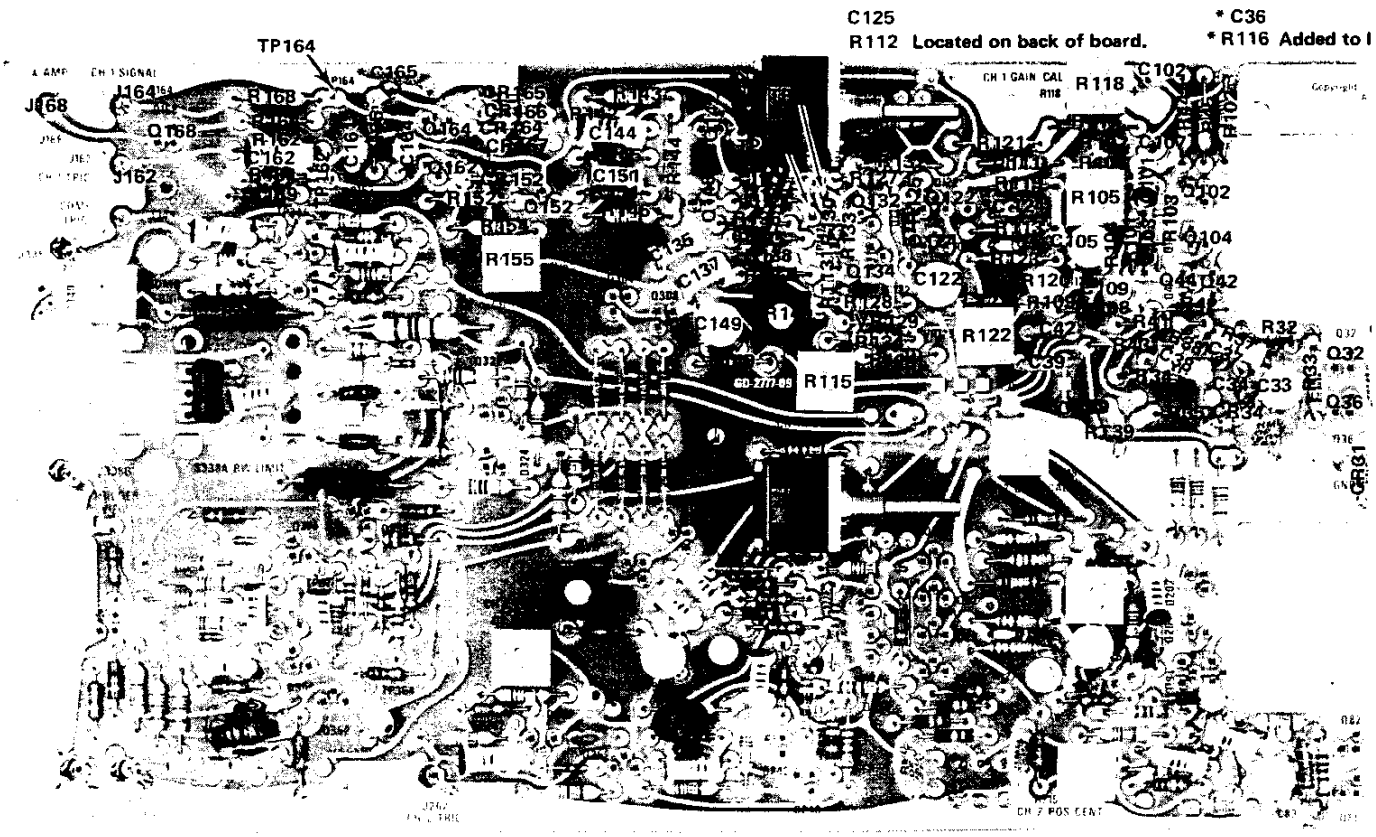

© REV. JUNE 1974

Fig. 7-5. P/O A3. Vertical Preamp circuit board.

FIG. 7-5

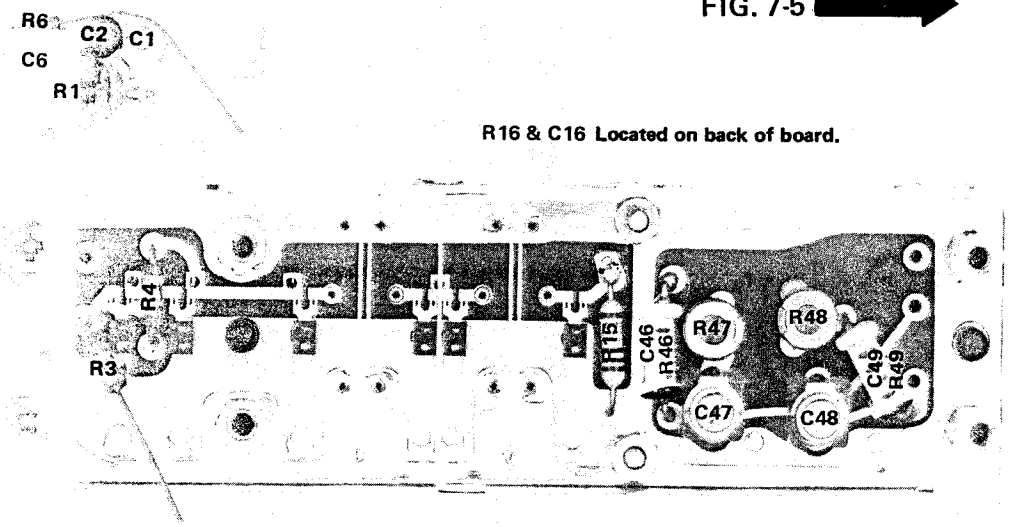

Fig. 7-3. A1. Channel 1 Attenuator circuit board.

Ⓐ1

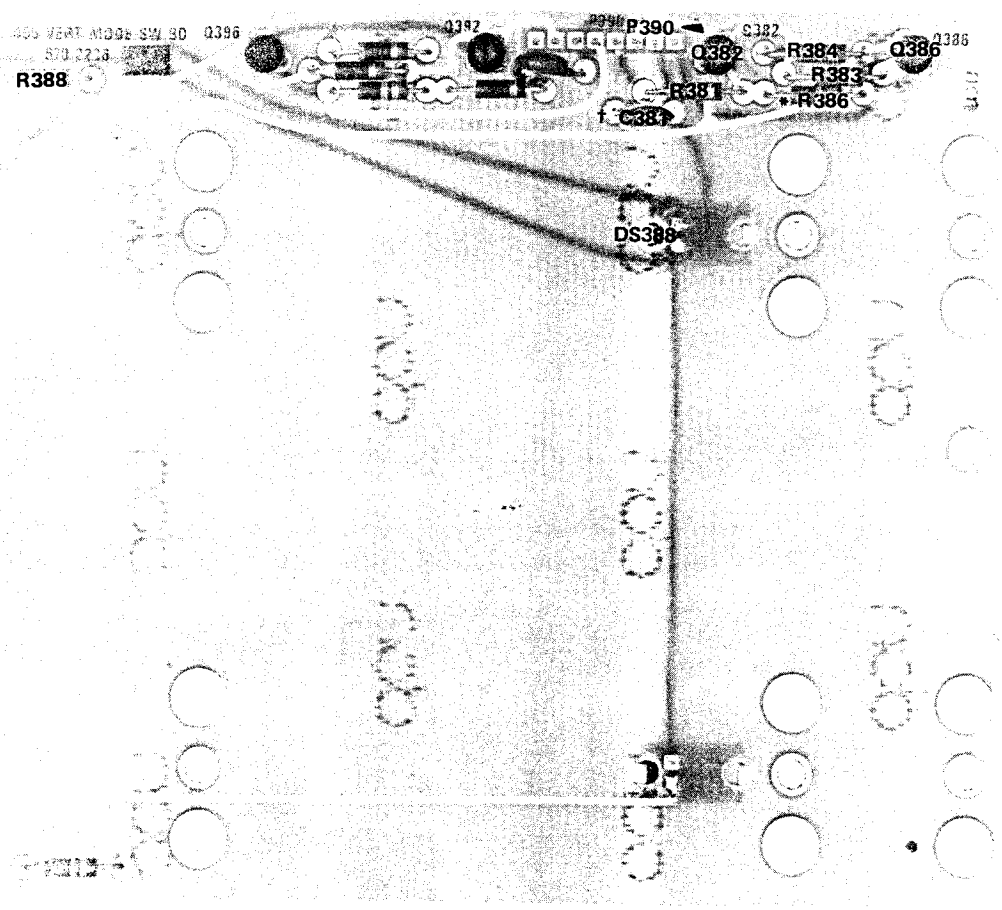

†Located on back of board for early serial numbers

*See Parts List for serial number ranges.

Fig. 7-4. P/O A4 Vertical Mode Switch circuit board.

C125
R112 Located on back of board.

* C36
* R116 Added to back of board

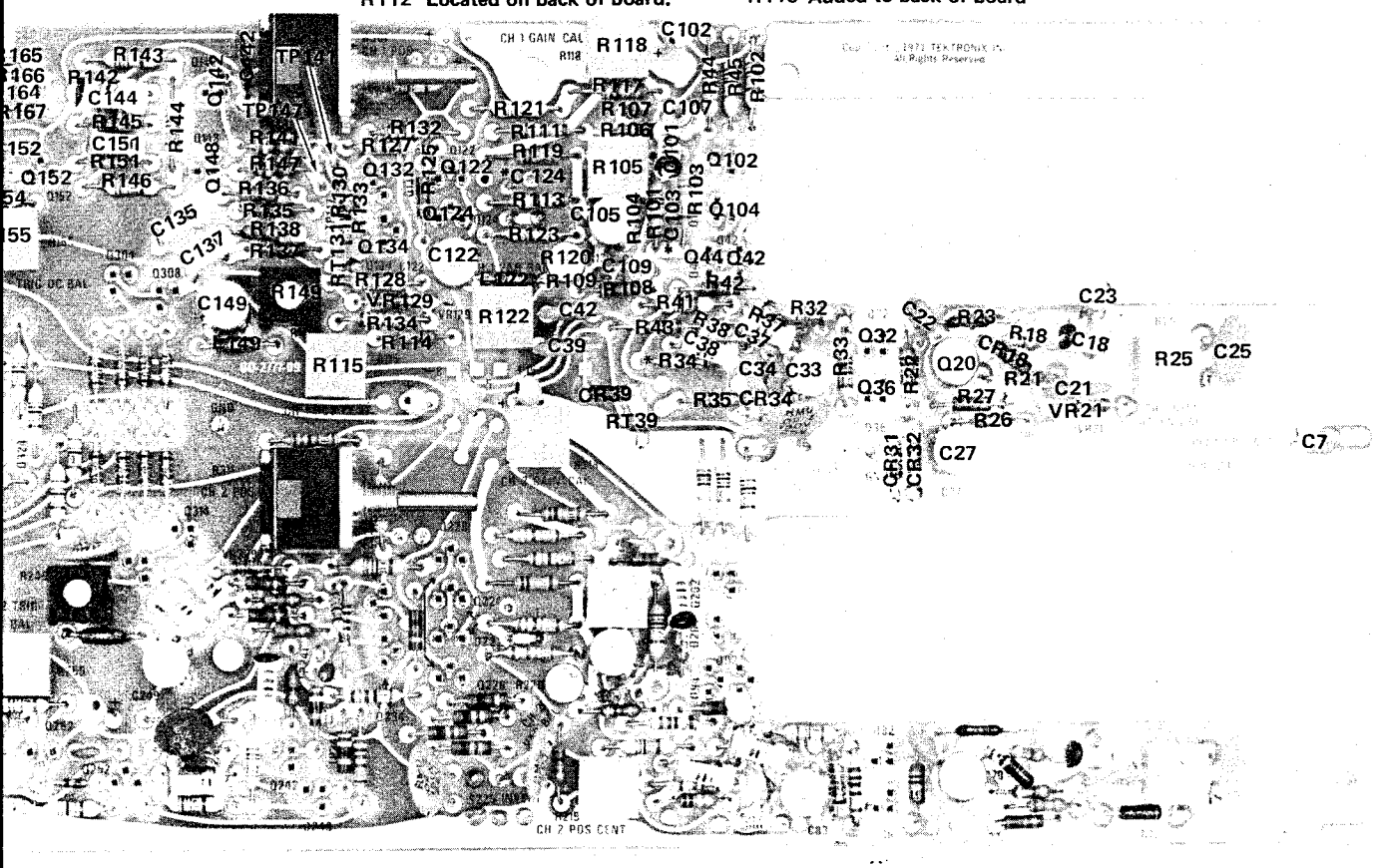

Fig. 7-5. P/O A3. Vertical Preamp circuit board.

*See Parts List for serial number ranges.

For Service Manuals
MAURITRON SERVICES
8 Cherry Tree Road, Chinnor
Oxfordshire, OX9 4QY.
Tel (01844) 351694
Fax (01844) 352554
email:- mauritron@dial.pipex.com

Added to back of board

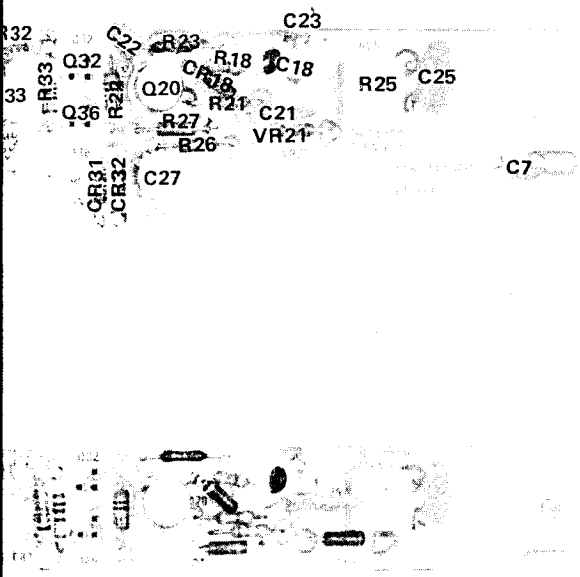

*See Parts List for serial number ranges.

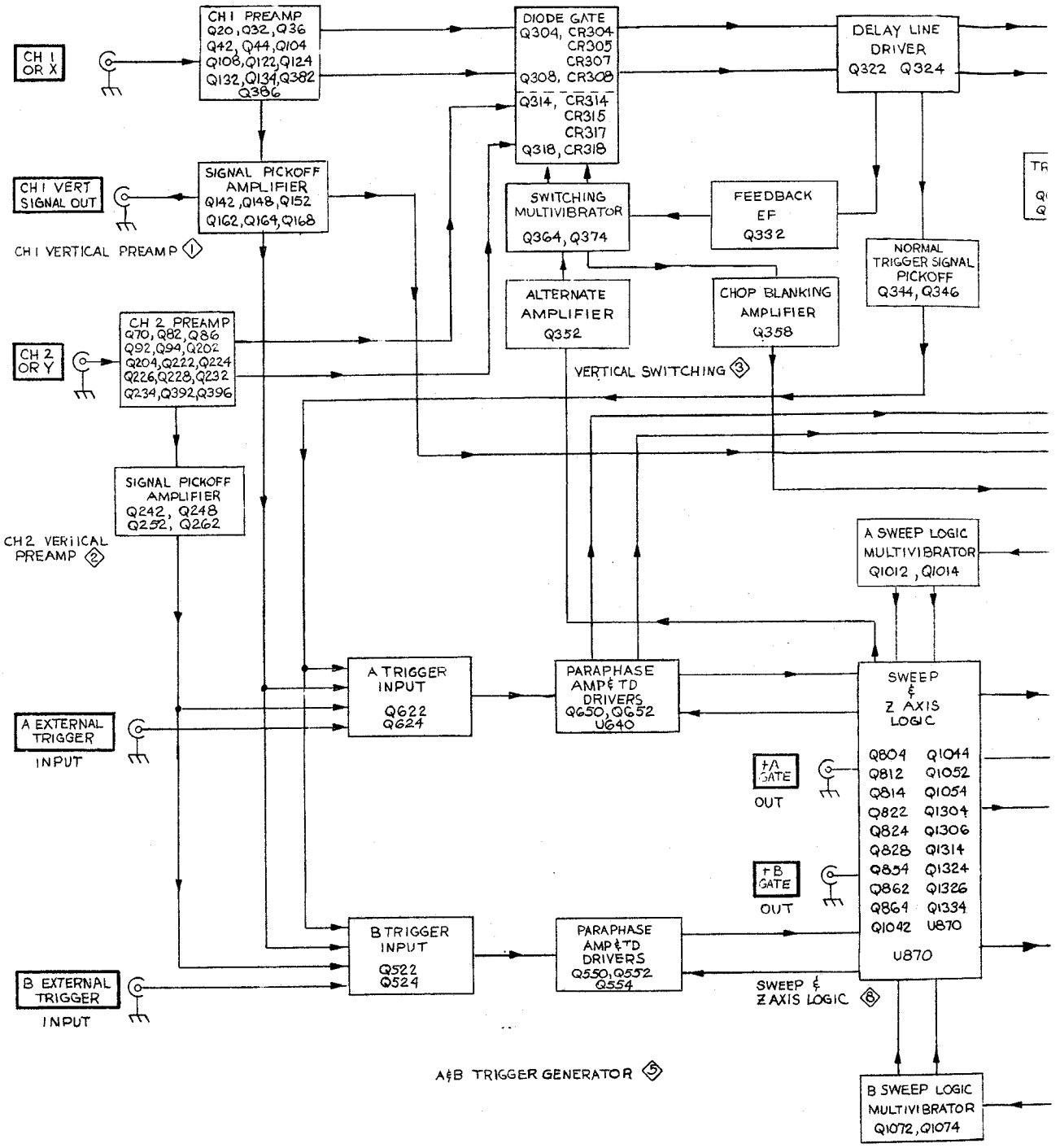
CH 1 OR X
CH 1 PREAMP Q20, Q32, Q36 Q42, Q44, Q104 Q108, Q122, Q124 Q132, Q134, Q382 Q386
DIODE GATE Q304, CR304 CR305 CR307 Q308, CR308
Q314, CR314 CR315 CR317 Q318, CR318
DELAY LINE DRIVER Q322 Q324
CH 1 VERT SIGNAL OUT
SIGNAL PICKOFF AMPLIFIER Q142, Q148, Q152 Q162, Q164, Q168
SWITCHING MULTIVIBRATOR Q364, Q374
FEEDBACK EF Q332
CH 1 VERTICAL PREAMP 1
NORMAL TRIGGER SIGNAL PICKOFF Q344, Q346
ALTERNATE AMPLIFIER Q352
CHOP BLANKING AMPLIFIER Q358
CH 2 OR Y
CH 2 PREAMP Q70, Q82, Q86 Q92, Q94, Q202 Q204, Q222, Q224 Q226, Q228, Q232 Q234, Q392, Q396
VERTICAL SWITCHING 3
SIGNAL PICKOFF AMPLIFIER Q242, Q248 Q252, Q262
CH 2 VERTICAL PREAMP 2
A SWEEP LOGIC MULTIVIBRATOR Q1012, Q1014
A TRIGGER INPUT Q622 Q624
PARAPHASE AMP & TD DRIVERS Q650, Q652 U640
SWEEP & Z AXIS LOGIC
A EXTERNAL TRIGGER INPUT
+A GATE OUT
Q804 Q1044
Q812 Q1052
Q814 Q1054
Q822 Q1304
Q824 Q1306
Q828 Q1314
Q854 Q1324
Q862 Q1326
Q864 Q1334
Q1042 U870
U870
+B GATE OUT
B TRIGGER INPUT Q522 Q524
PARAPHASE AMP & TD DRIVERS Q550, Q552 Q554
B EXTERNAL TRIGGER INPUT
SWEEP & Z AXIS LOGIC 8
A&B TRIGGER GENERATOR 5
B SWEEP LOGIC MULTIVIBRATOR Q1072, Q1074

A

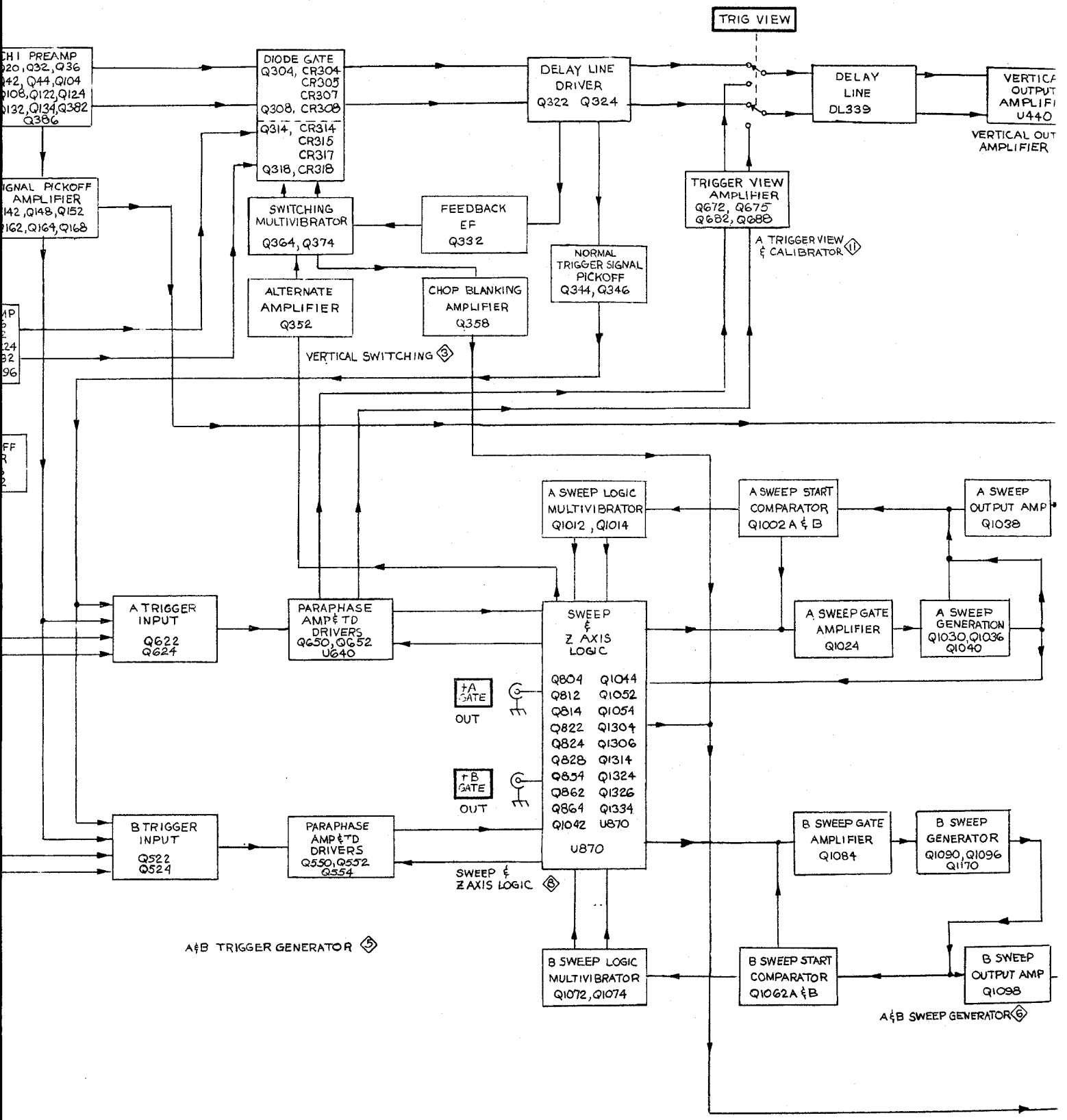
TRIG VIEW
CH1 PREAMP
Q20, Q32, Q36
Q42, Q44, Q104
Q108, Q122, Q124
Q132, Q134, Q382
Q386
DIODE GATE
Q304, CR304
CR305
CR307
Q308, CR308
Q314, CR314
CR315
CR317
Q318, CR318
DELAY LINE DRIVER
Q322 Q324
DELAY LINE
DL339
VERTICAL OUTPUT AMPLIFIER
U440
VERTICAL OUT AMPLIFIER
SIGNAL PICKOFF AMPLIFIER
Q142, Q148, Q152
Q162, Q164, Q168
SWITCHING MULTIVIBRATOR
Q364, Q374
FEEDBACK EF
Q332
TRIGGER VIEW AMPLIFIER
Q672, Q675
Q682, Q688
A TRIGGER VIEW & CALIBRATOR 11
NORMAL TRIGGER SIGNAL PICKOFF
Q344, Q346
ALTERNATE AMPLIFIER
Q352
CHOP BLANKING AMPLIFIER
Q358
VERTICAL SWITCHING 3
A SWEEP LOGIC MULTIVIBRATOR
Q1012, Q1014
A SWEEP START COMPARATOR
Q1002 A & B
A SWEEP OUTPUT AMP
Q1038
A TRIGGER INPUT
Q622
Q624
PARAPHASE AMP & TD DRIVERS
Q650, Q652
U640
SWEEP & Z AXIS LOGIC
Q804 Q1044
Q812 Q1052
Q814 Q1054
Q822 Q1304
Q824 Q1306
Q828 Q1314
Q854 Q1324
Q862 Q1326
Q864 Q1334
Q1042 U870
U870
A SWEEP GATE AMPLIFIER
Q1024
A SWEEP GENERATION
Q1030, Q1036
Q1040
+A GATE
OUT
+B GATE
OUT
B TRIGGER INPUT
Q522
Q524
PARAPHASE AMP & TD DRIVERS
Q550, Q552
Q554
SWEEP & Z AXIS LOGIC 8
B SWEEP GATE AMPLIFIER
Q1084
B SWEEP GENERATOR
Q1090, Q1096
Q1170
A & B TRIGGER GENERATOR 5
B SWEEP LOGIC MULTIVIBRATOR
Q1072, Q1074
B SWEEP START COMPARATOR
Q1062A & B
B SWEEP OUTPUT AMP
Q1098
A & B SWEEP GENERATOR 6

A

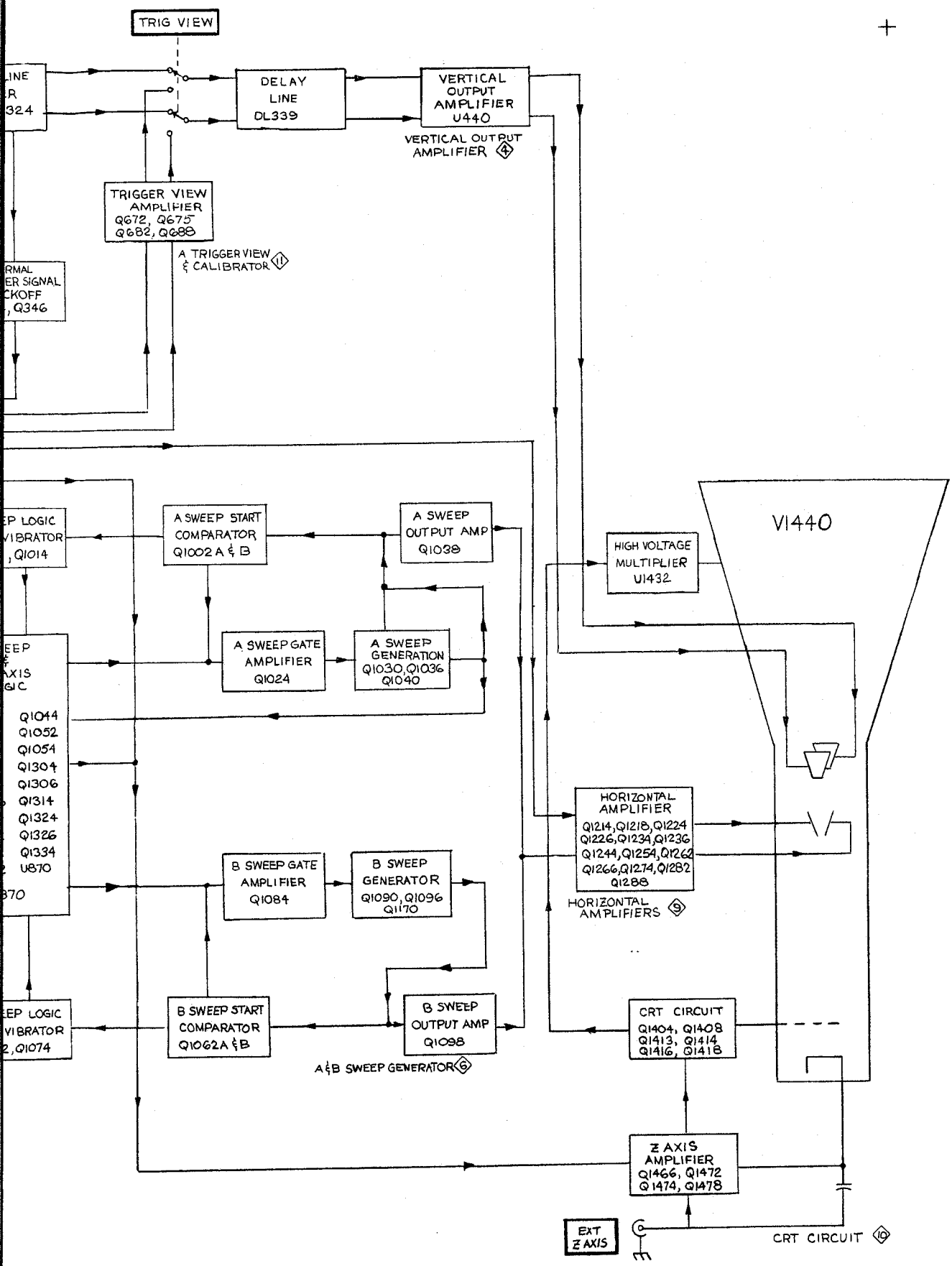

BLOCK DIAGRAM

1072
JEN

A

FIG. 7-8

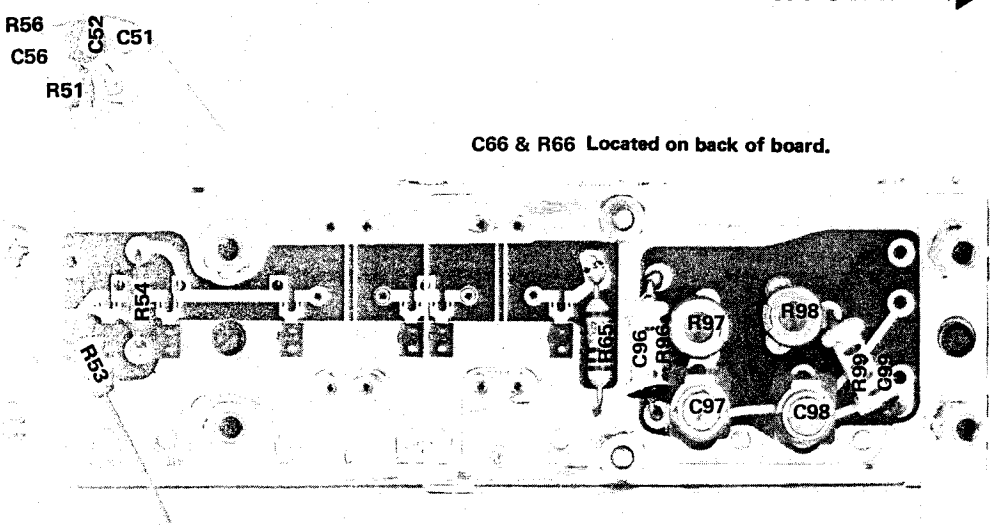

Ⓐ

Fig. 7-6. A2 Channel 2 Attenuator circuit board.

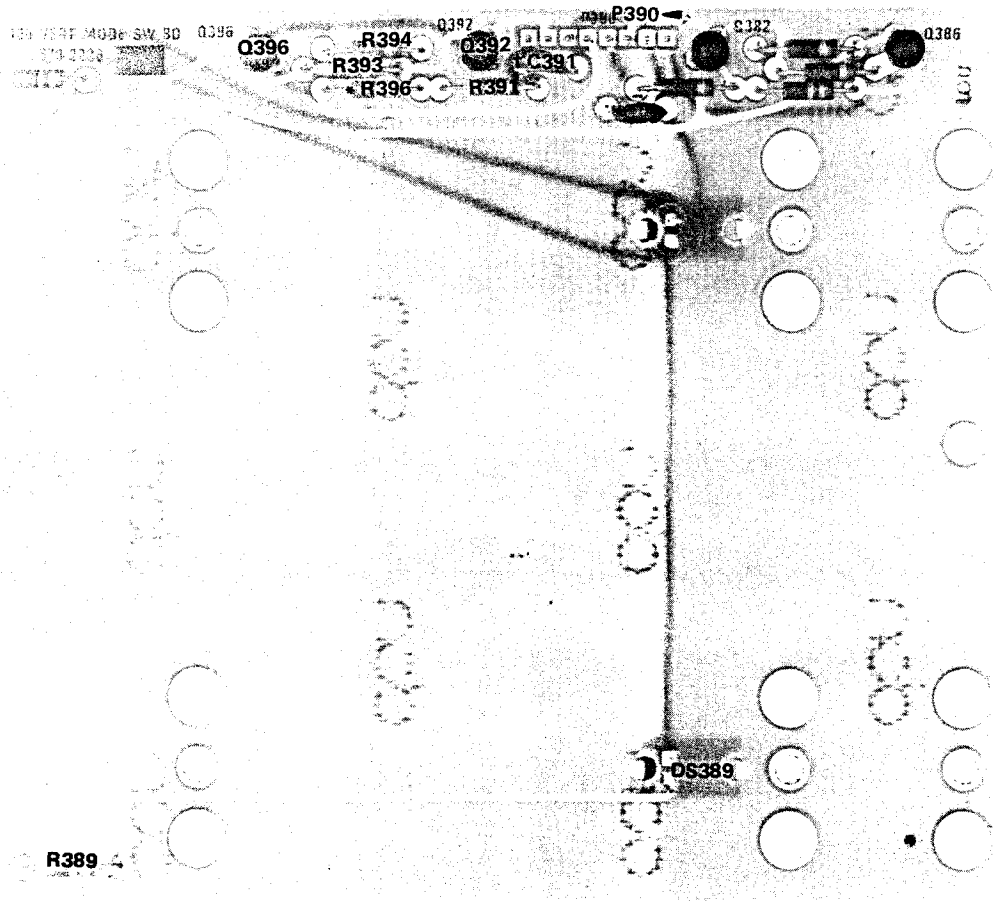

Fig. 7-7. A4. Vertical Mode Switch circuit board.

†Located on back of board for early serial numbers.

*See Parts List for serial number ranges.

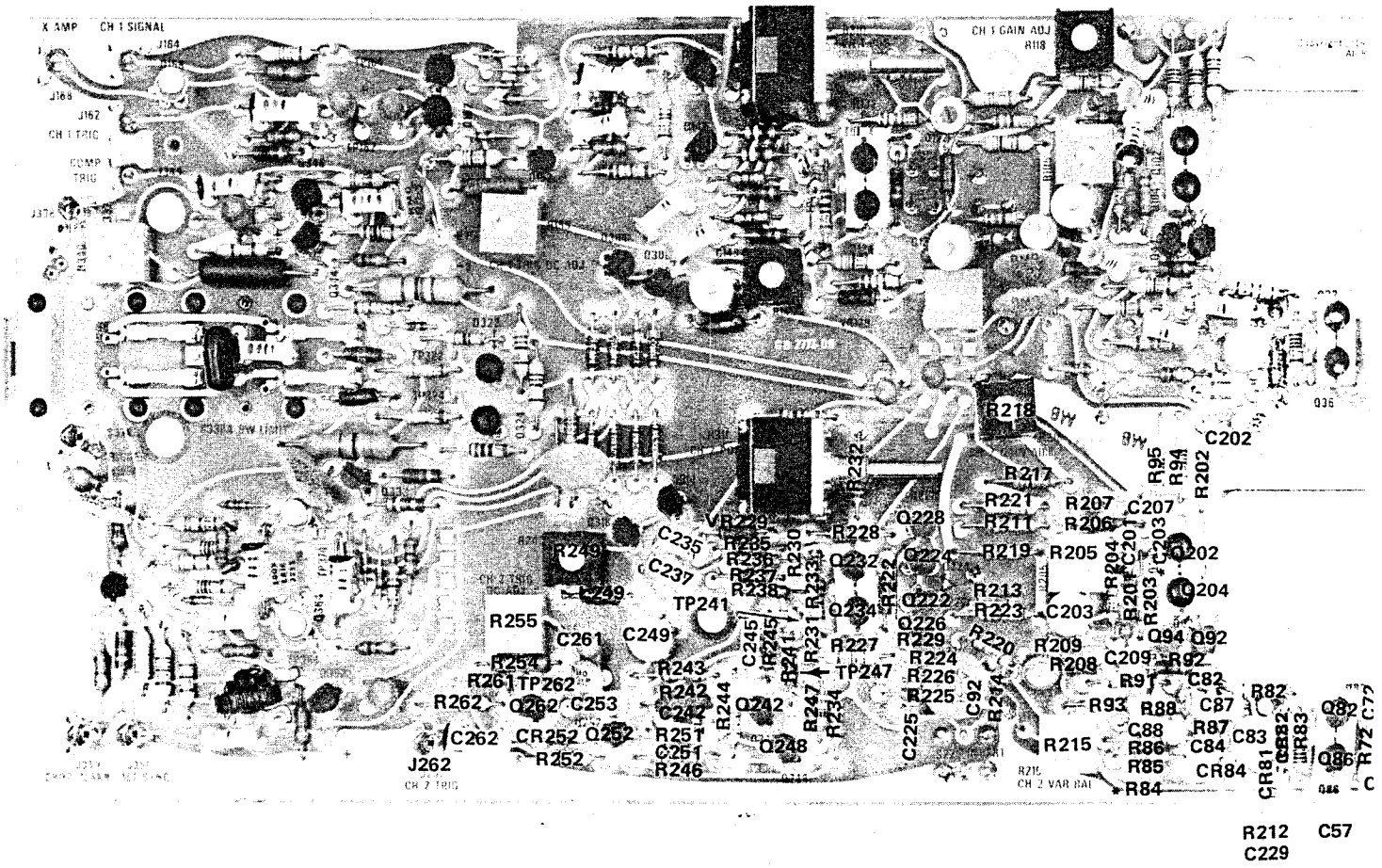

Fig. 7-8. P/O A3. Vertical Preamp circuit board.

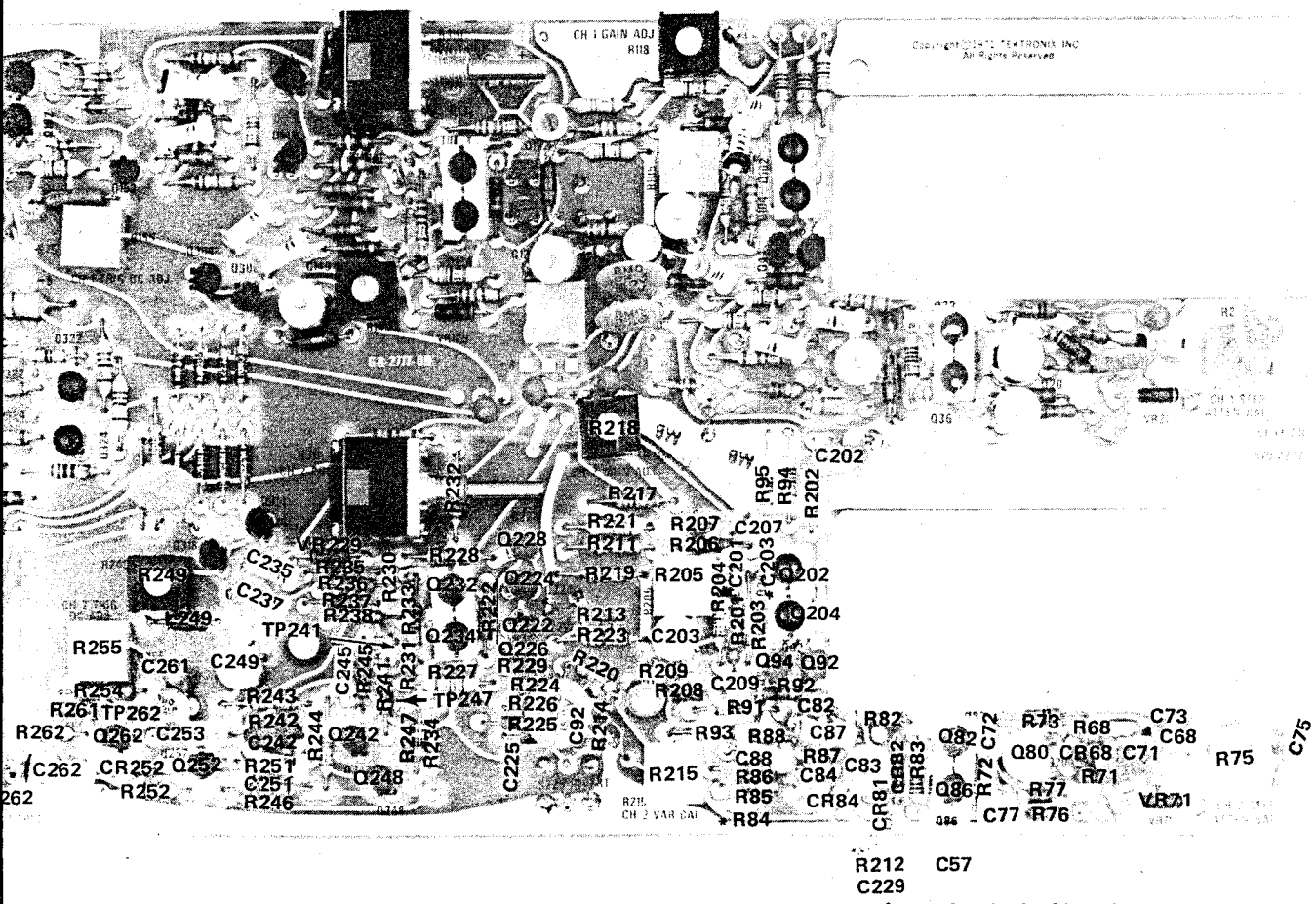

Fig. 7-8. P/O A3. Vertical Preamp circuit board.

Copyright © 1972 TEKTRONIX, INC
All Rights Reserved

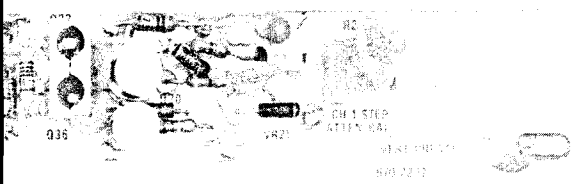

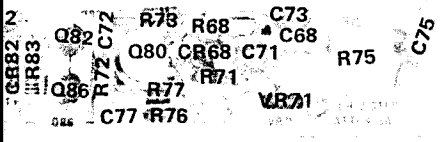

2 C57
29
Located on back of board.

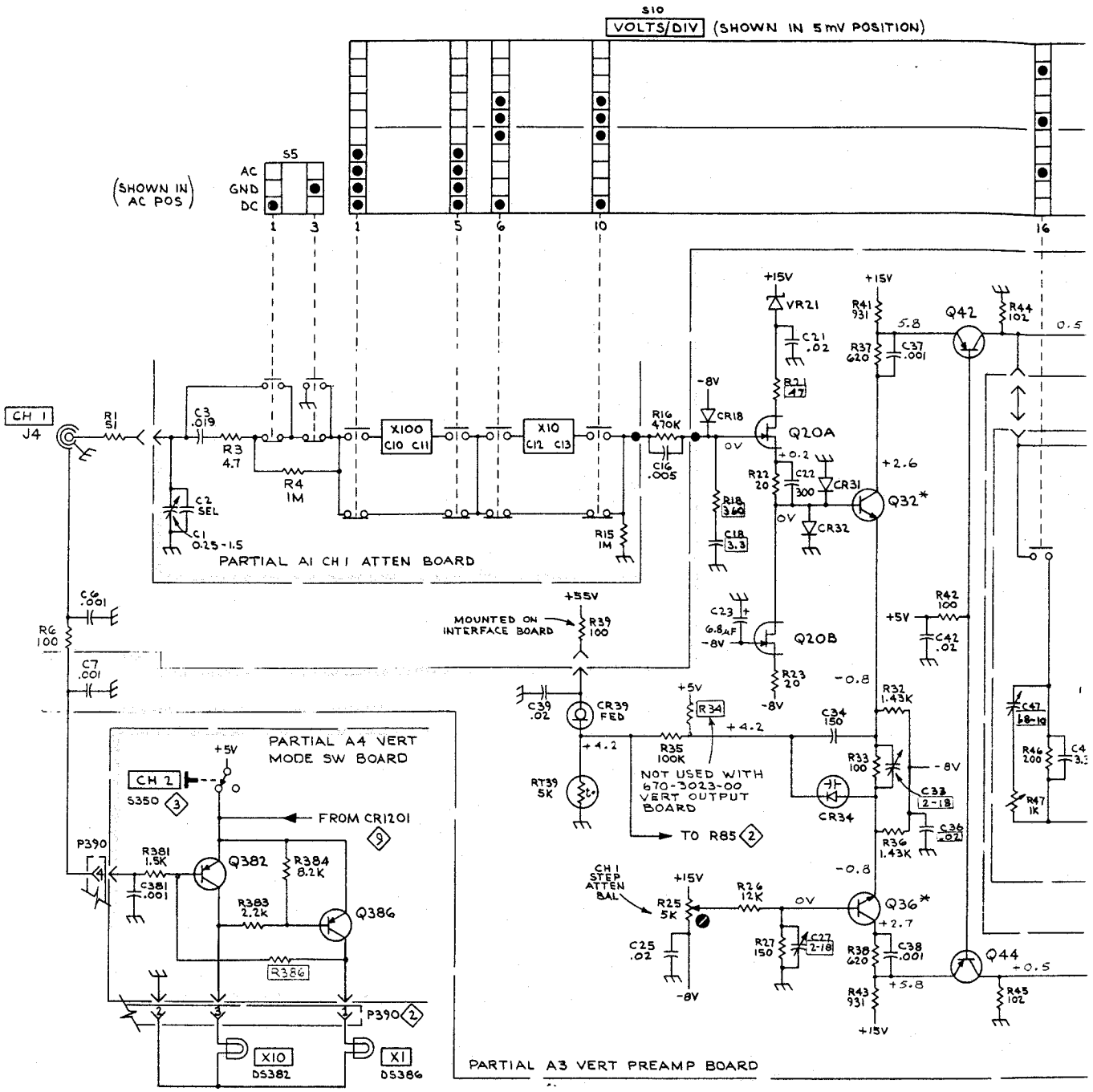

NOTE:
*, ϕ, ≠ THERMAL COUPLED

SEE PARTS LIST FOR EARLIER VALUES AND SERIAL NUMBER RANGES OF PARTS MARKED WITH BLUE OUTLINE.

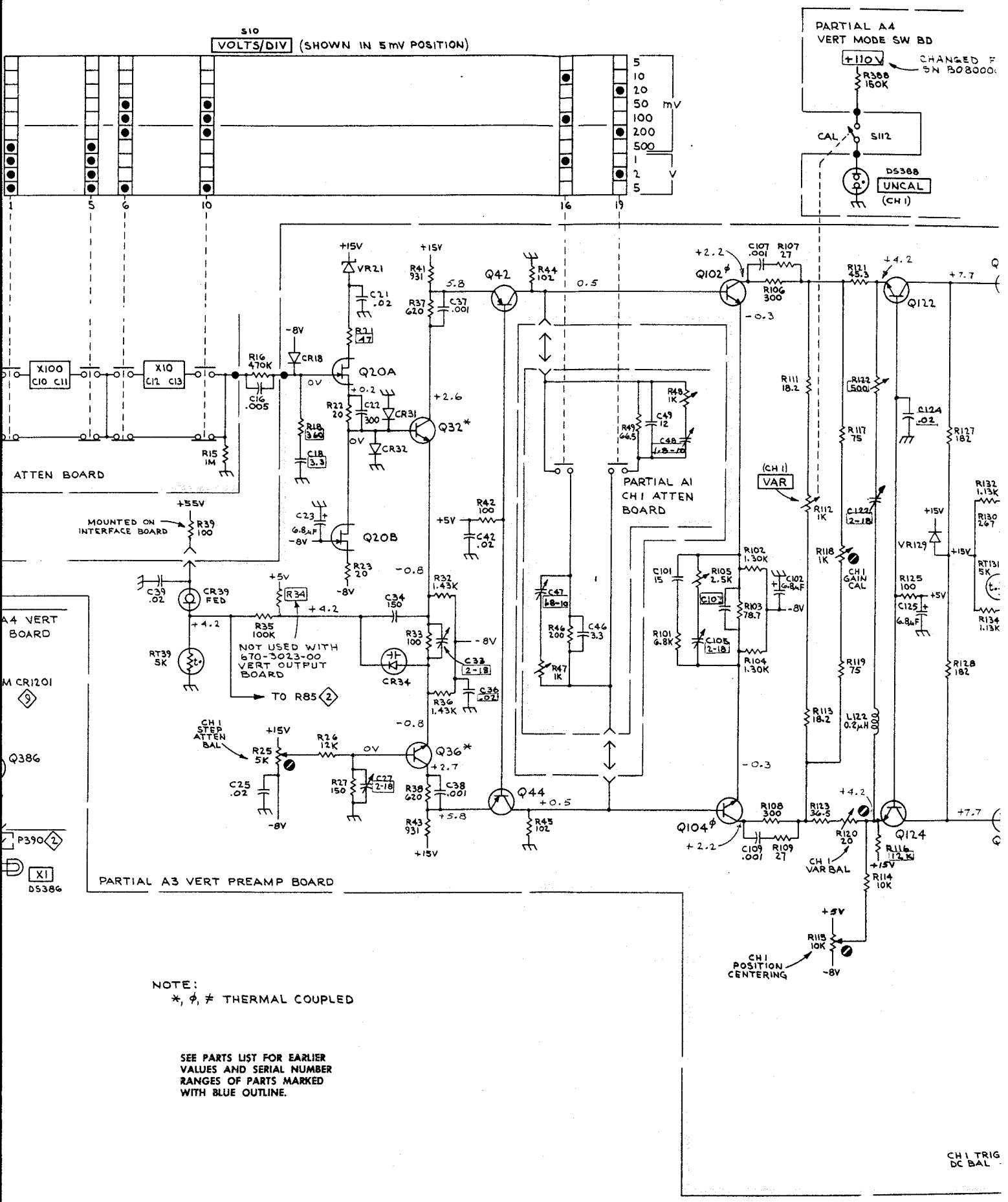

NOTE:
*, ϕ, ≠ THERMAL COUPLED

SEE PARTS LIST FOR EARLIER VALUES AND SERIAL NUMBER RANGES OF PARTS MARKED WITH BLUE OUTLINE.

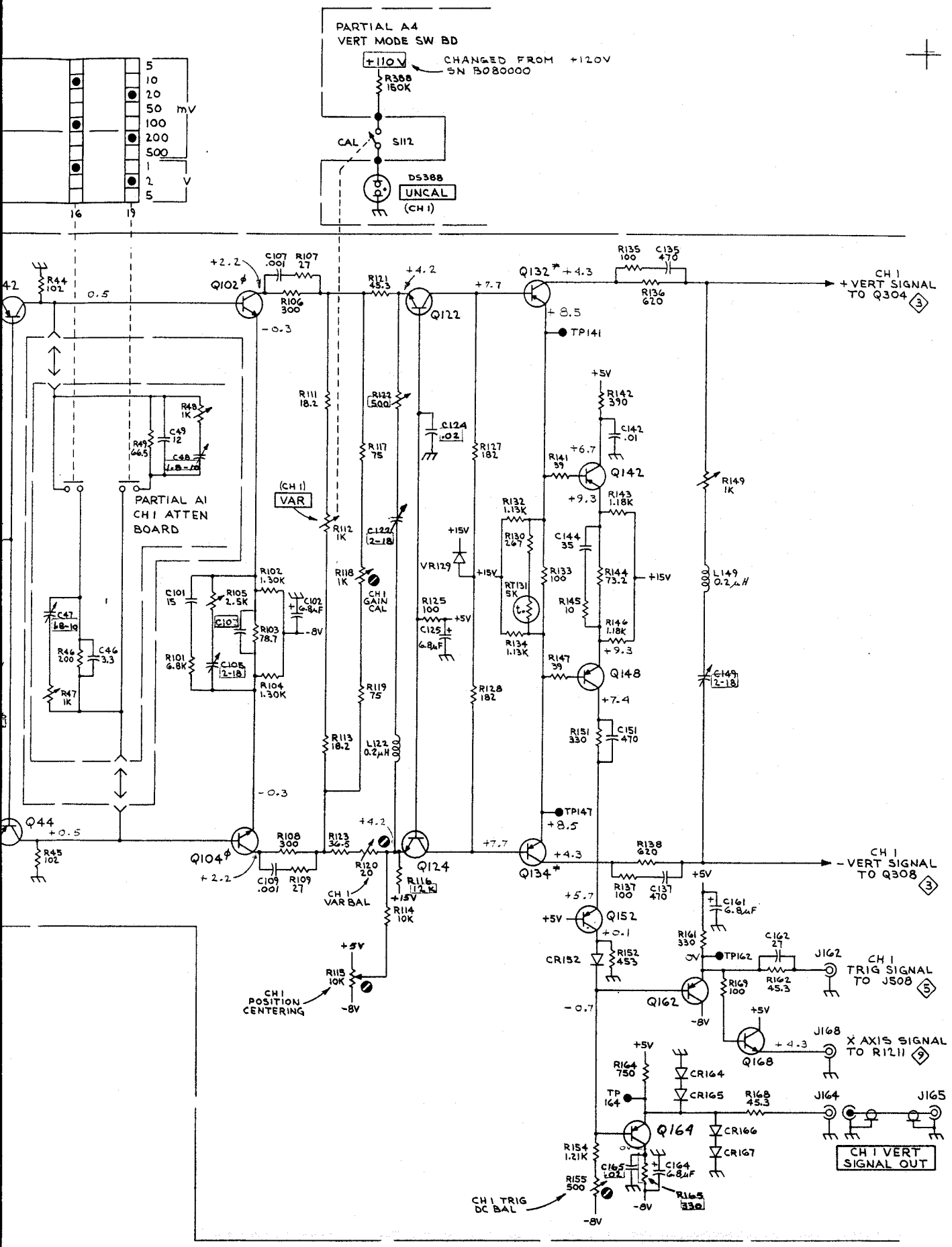

E

CH 1 VERTICAL PREAMP 1

mgf
REV. JUNE 1974

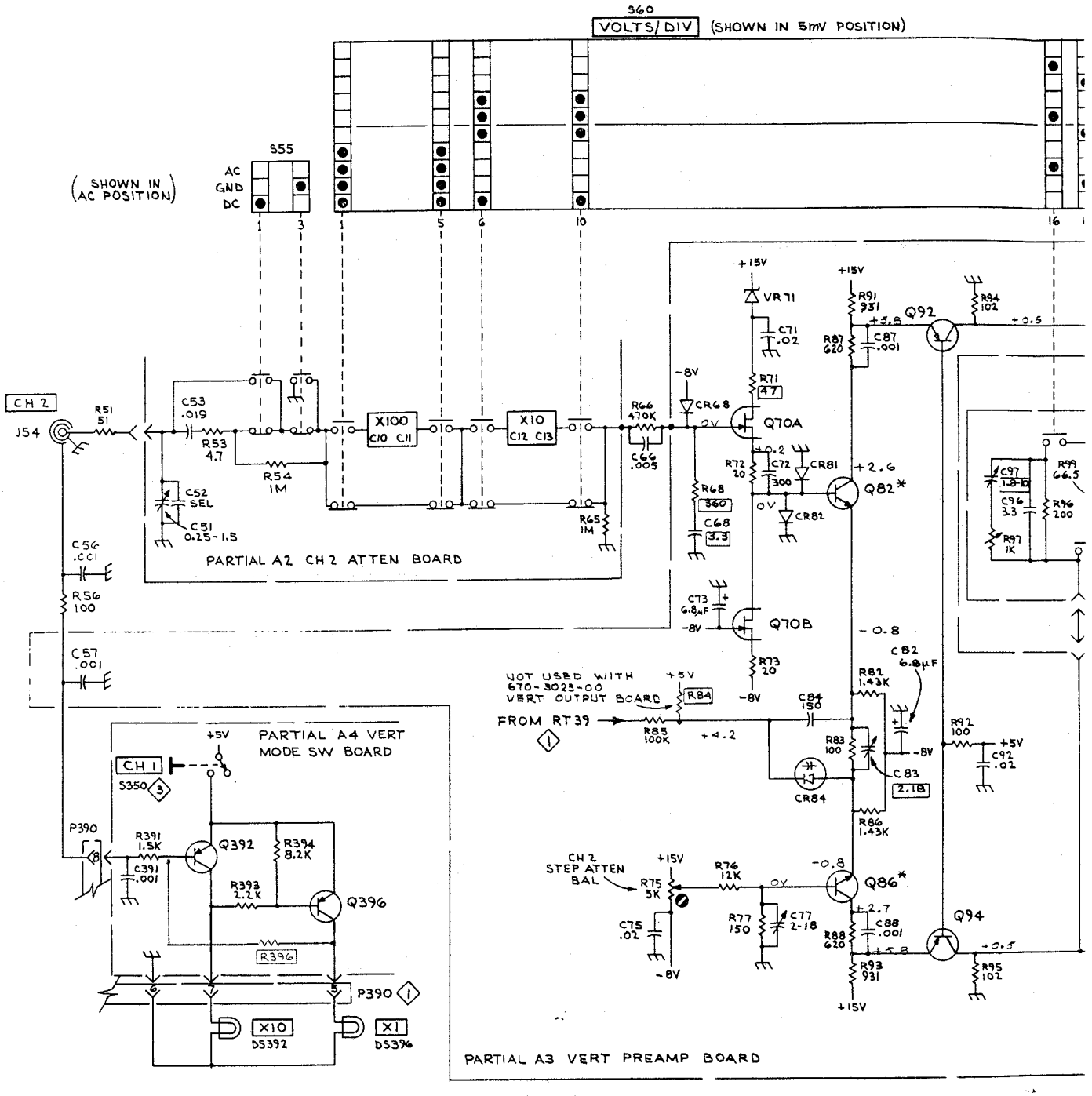

NOTES:
ϕ, *, ≠ THERMAL COUPLED
**, ≠ MATCHED PAIR

SEE PARTS LIST FOR EARLIER VALUES AND SERIAL NUMBER RANGES OF PARTS MARKED WITH BLUE OUTLINE.

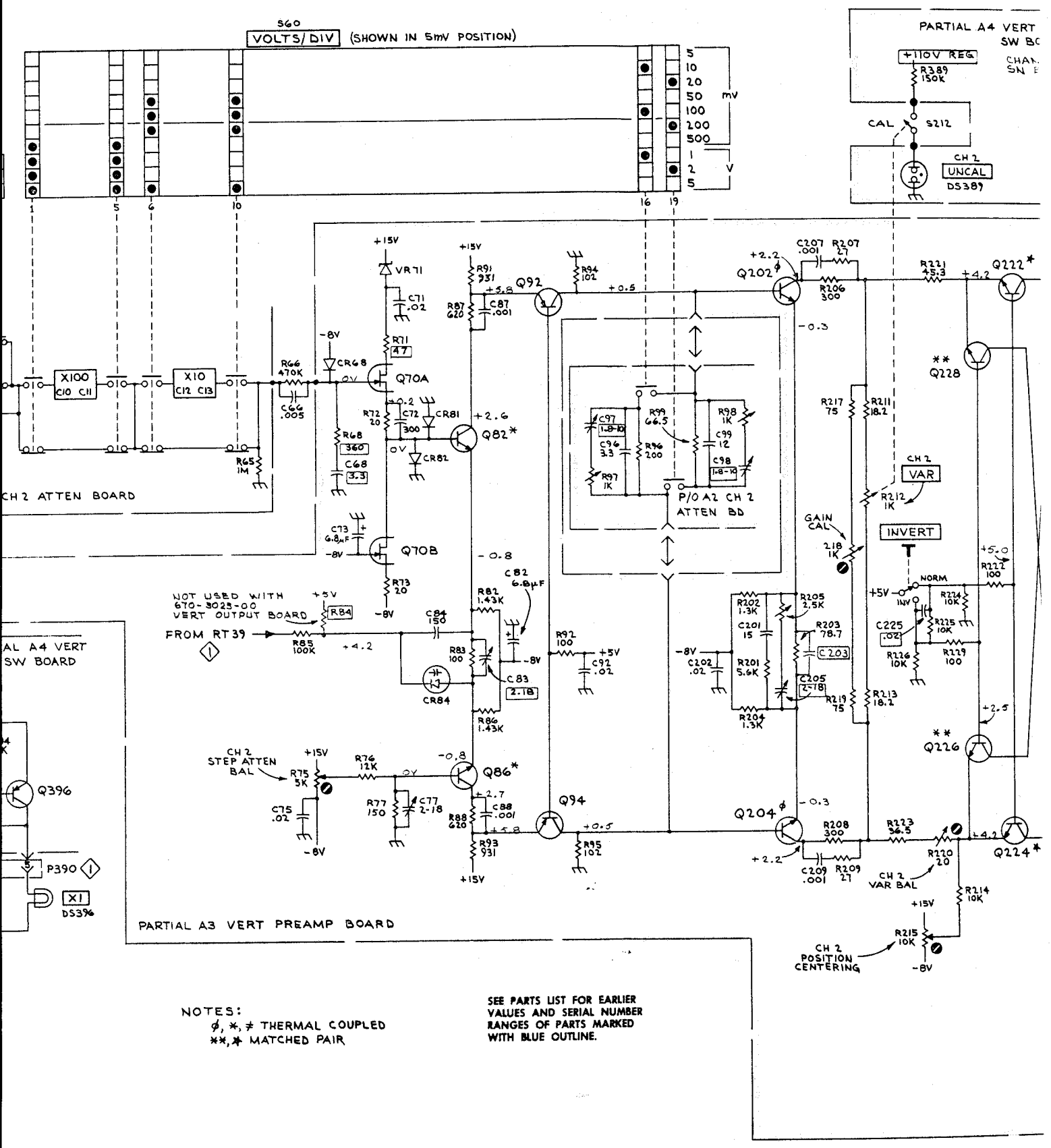

NOTES:
ϕ, *, ≠ THERMAL COUPLED
**, ✱ MATCHED PAIR

SEE PARTS LIST FOR EARLIER VALUES AND SERIAL NUMBER RANGES OF PARTS MARKED WITH BLUE OUTLINE.

CH 2 VER

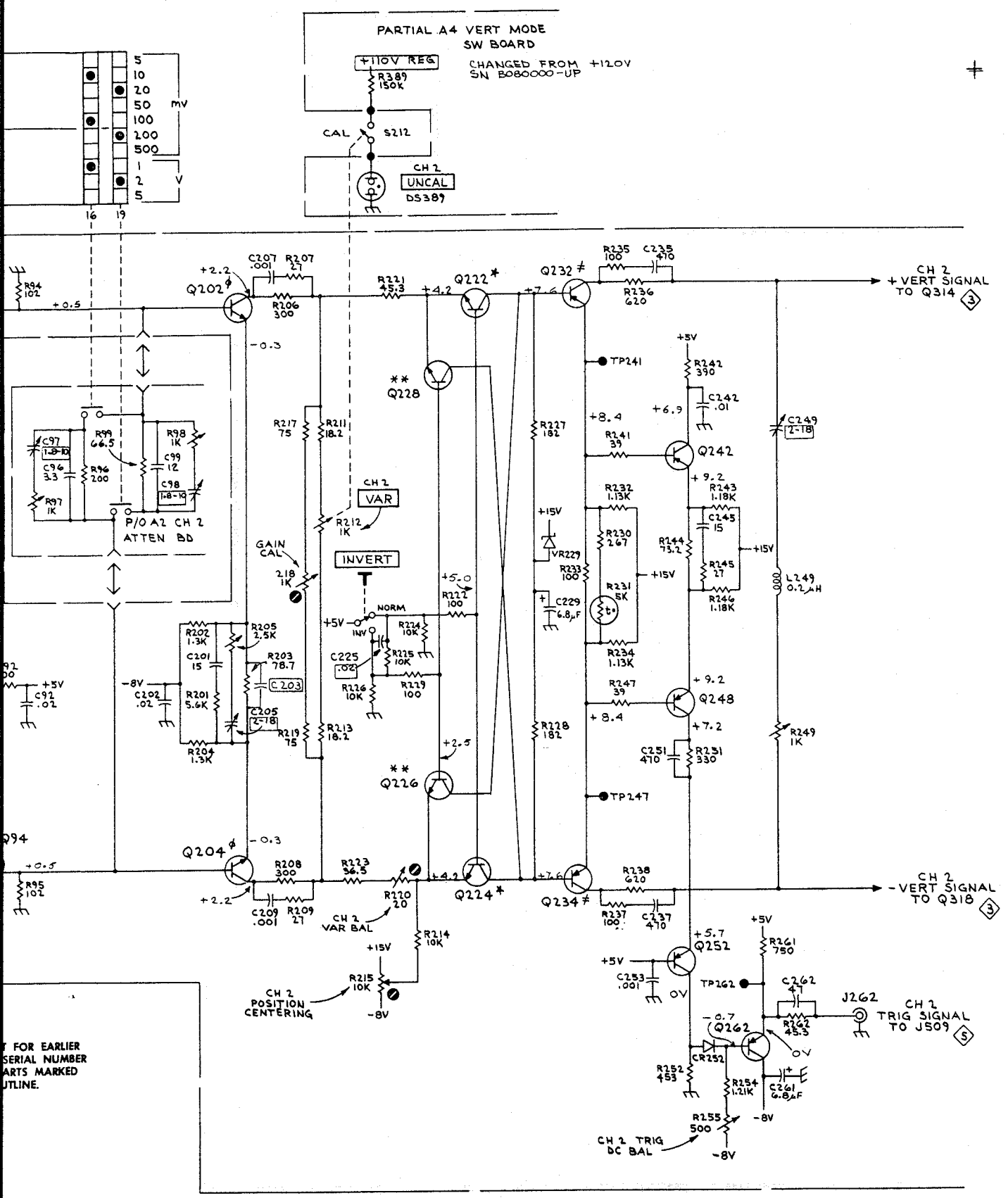

CH 2 VERTICAL PREAMP 2

mgf
REV. JUNE 1974

C302 Loca

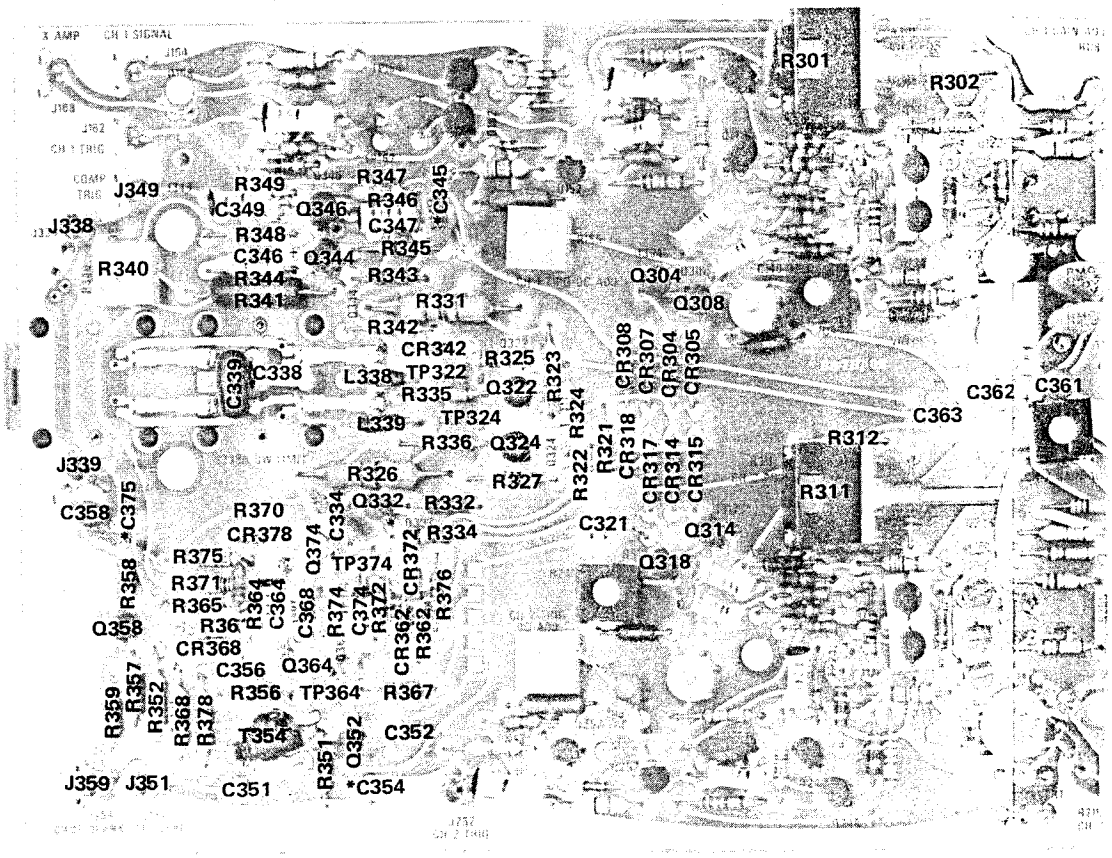

*See Parts List for serial number ranges.

Fig. 7-9. P/O A3. Vertical Preamp cir

Ⓑ

C302 Located on back of board.

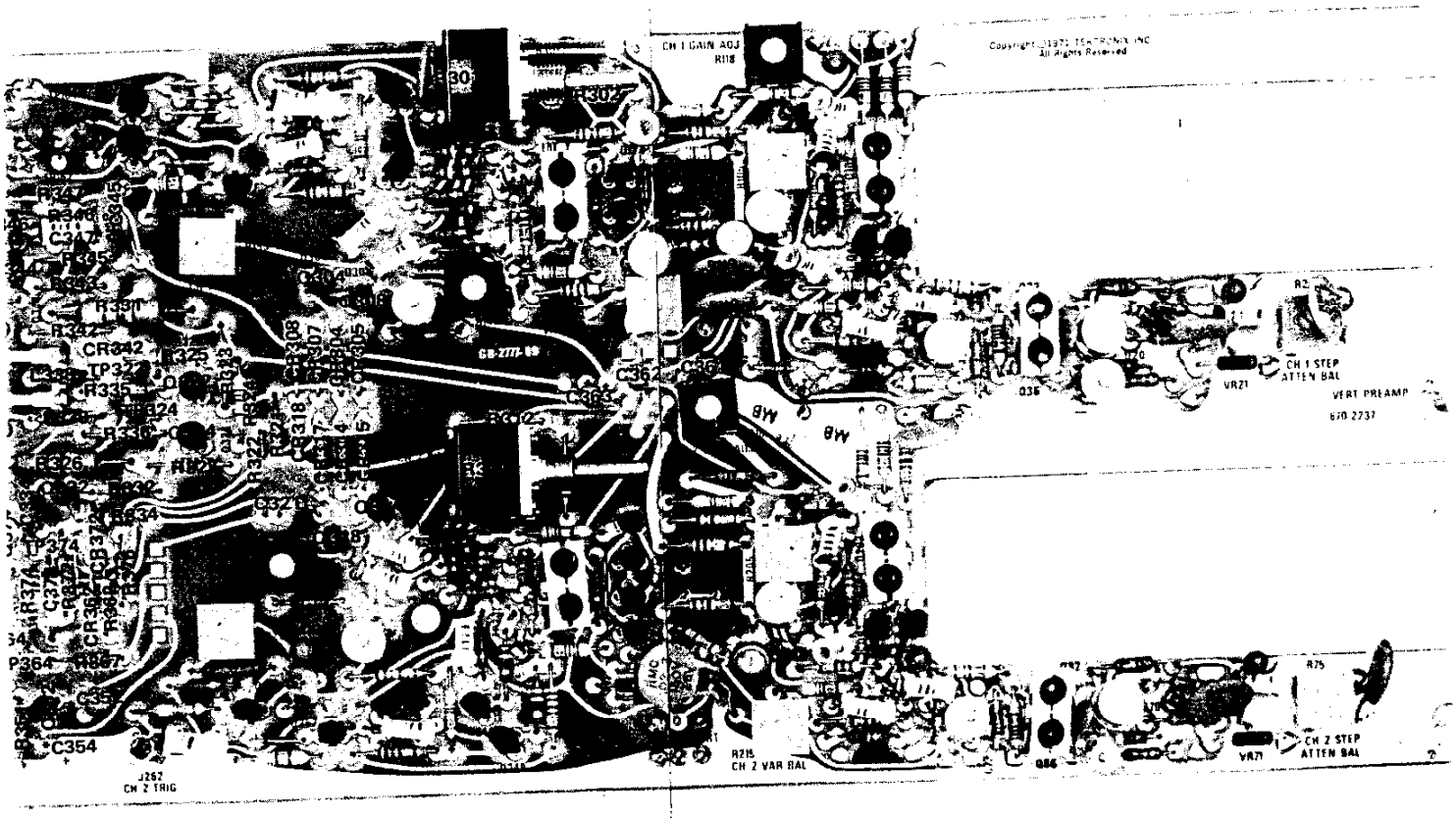

Fig. 7-9. P/O A3. Vertical Preamp circuit board.

C302 **Located on back of board.**

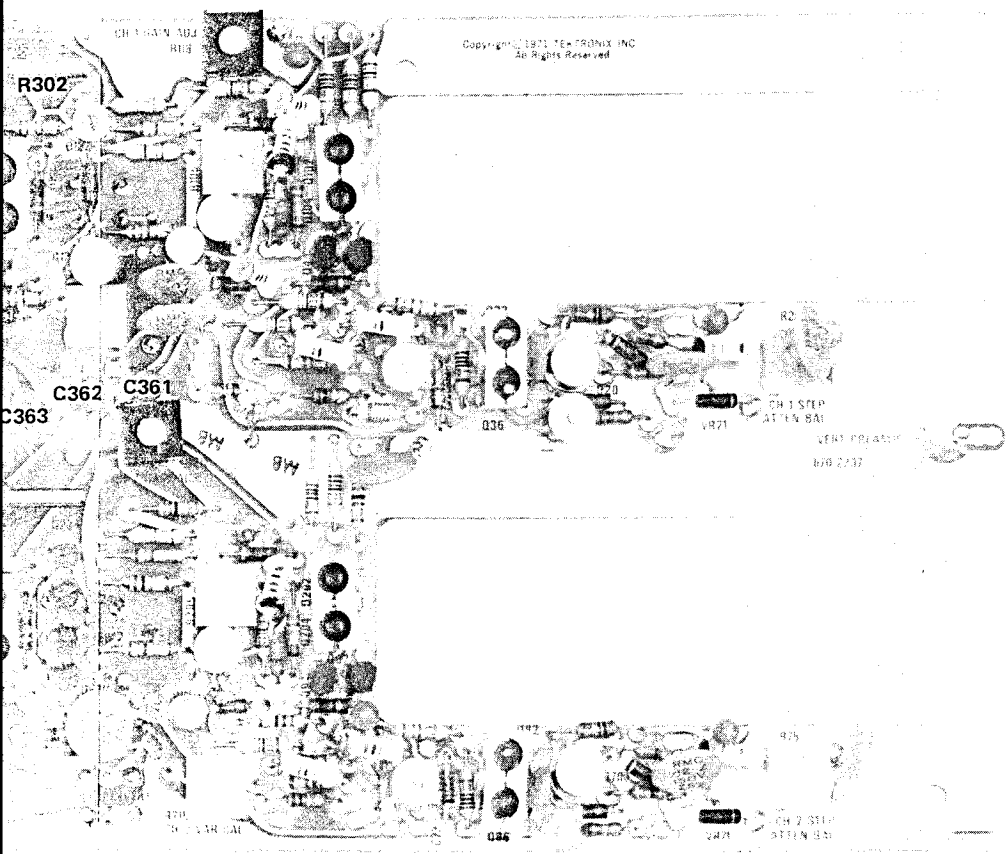

3. **Vertical Preamp circuit board.**

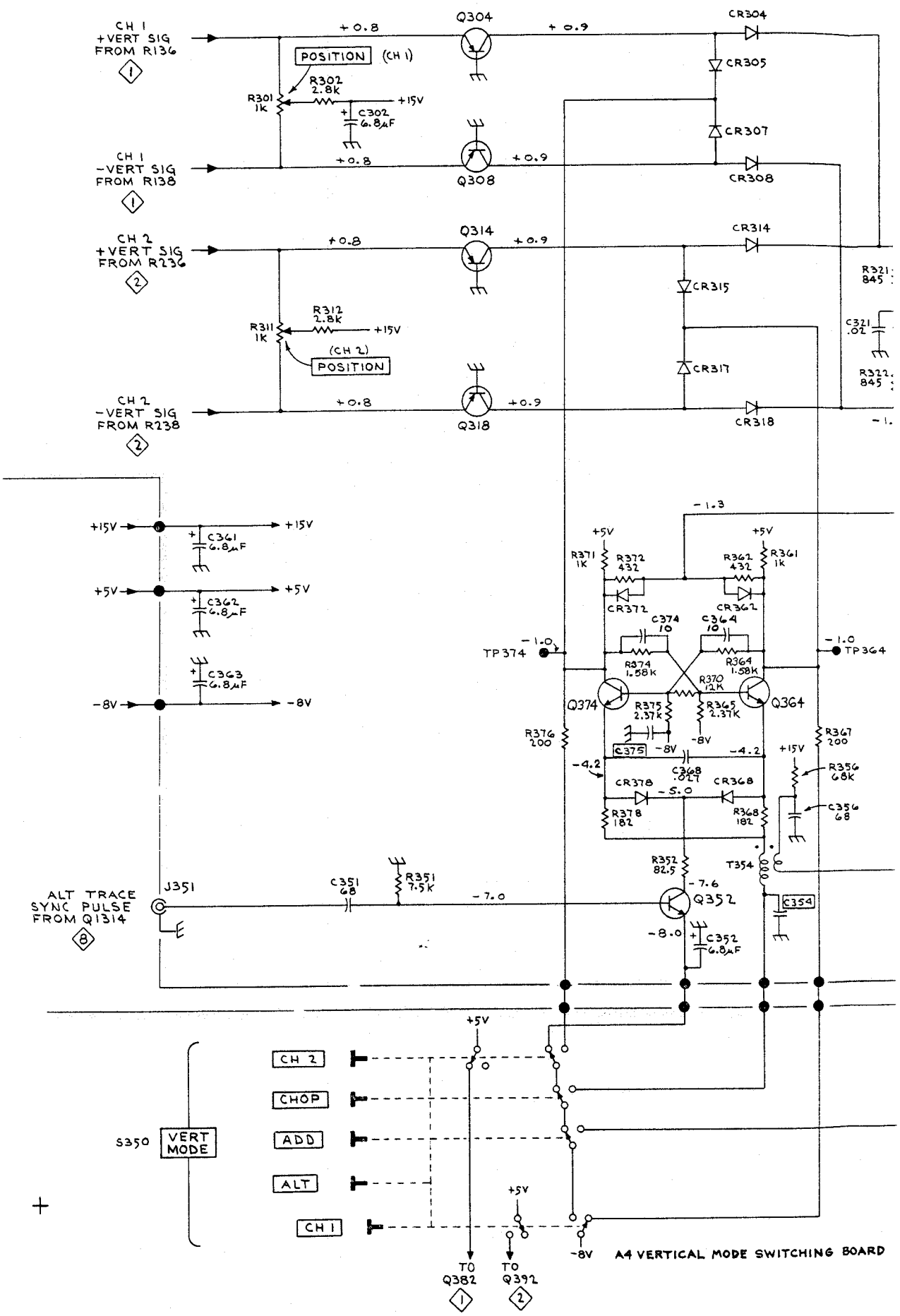
CH 1 +VERT SIG FROM R136
CH 1 -VERT SIG FROM R138
CH 2 +VERT SIG FROM R236
CH 2 -VERT SIG FROM R238
POSITION (CH 1)
POSITION (CH 2)
R301 1k
R302 2.8k
R311 1k
R312 2.8k
C302 6.8µF
Q304
Q308
Q314
Q318
CR304
CR305
CR307
CR308
CR314
CR315
CR317
CR318
+15V
+5V
-8V
C361 6.8µF
C362 6.8µF
C363 6.8µF
R371 1k
R372 432
R362 432
R361 1k
CR372
CR362
C374 10
C364 10
TP374
TP364
R374 1.58k
R364 1.58k
R370 12k
Q374
Q364
R375 2.37k
R365 2.37k
R376 200
R367 200
C375
C368 .027
CR378
CR368
R378 182
R368 182
R356 68k
C356 68
T354
R352 82.5
Q352
C354
C352 6.8µF
ALT TRACE SYNC PULSE FROM Q1314
J351
C351 68
R351 7.5k
S350 VERT MODE
CH 2
CHOP
ADD
ALT
CH 1
TO Q382
TO Q392
A4 VERTICAL MODE SWITCHING BOARD

©

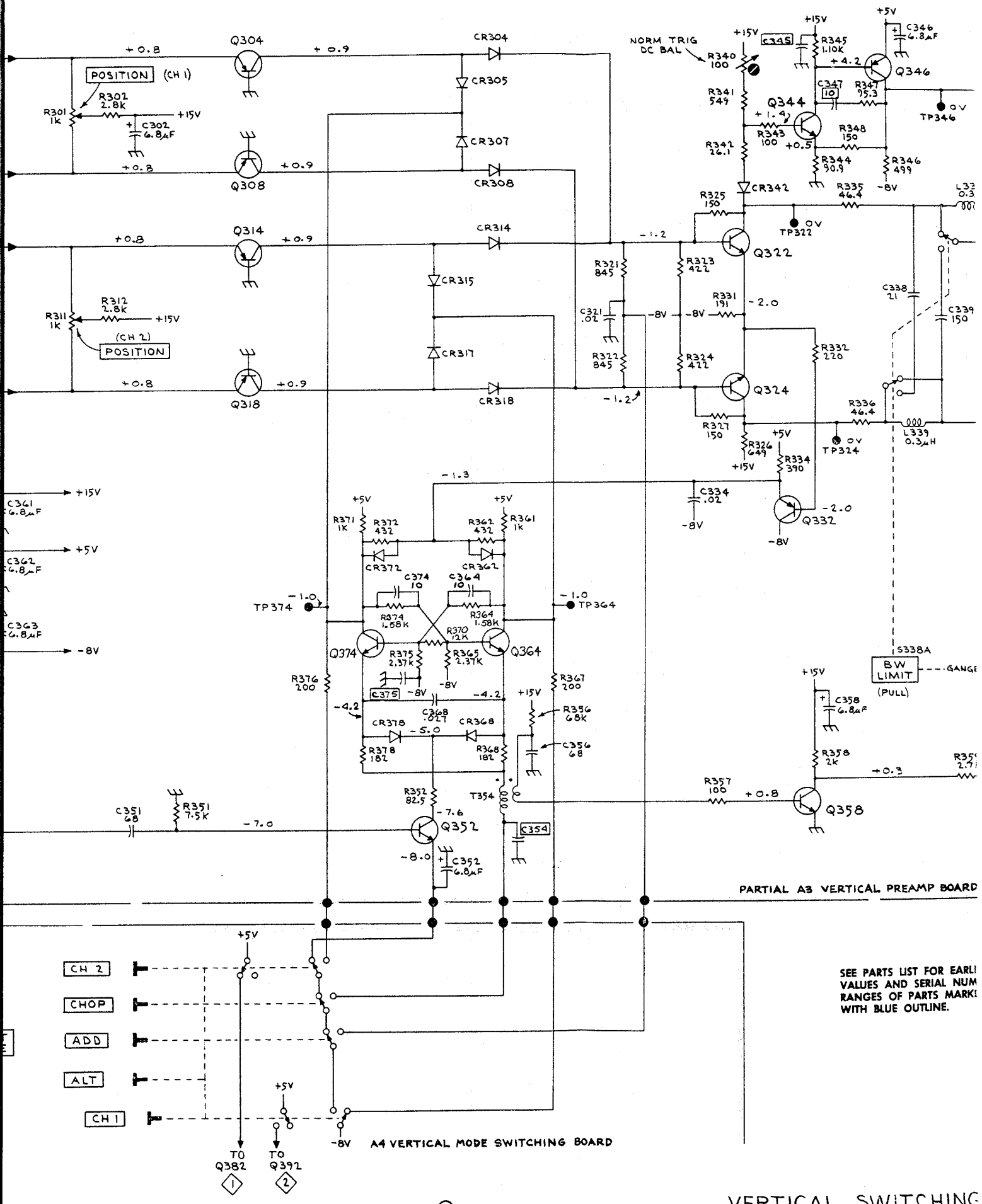

VERTICAL SWITCHING

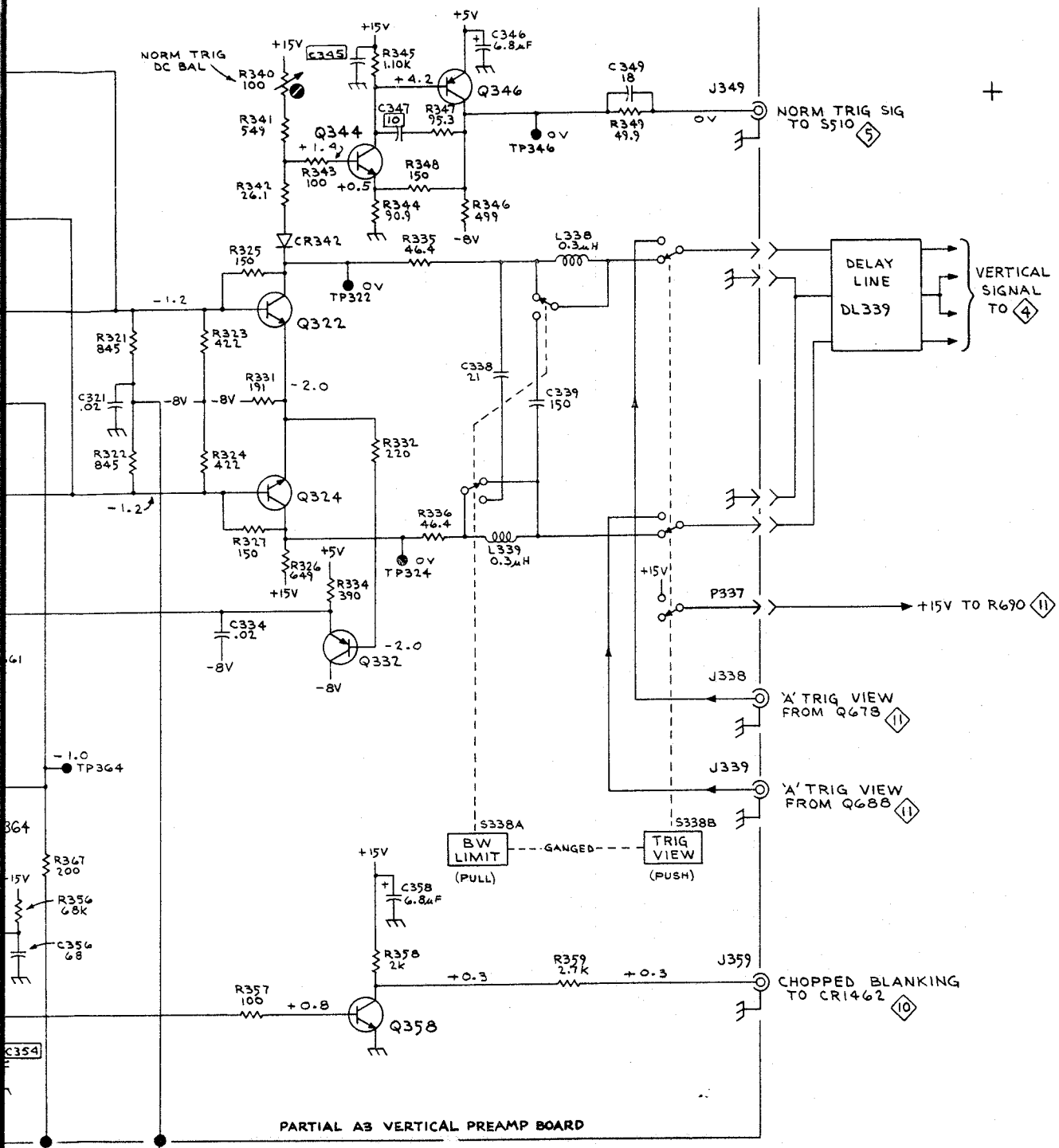

VERTICAL SWITCHING 3

mgf
REV. JUNE 1974

BOARD BELOW B040000

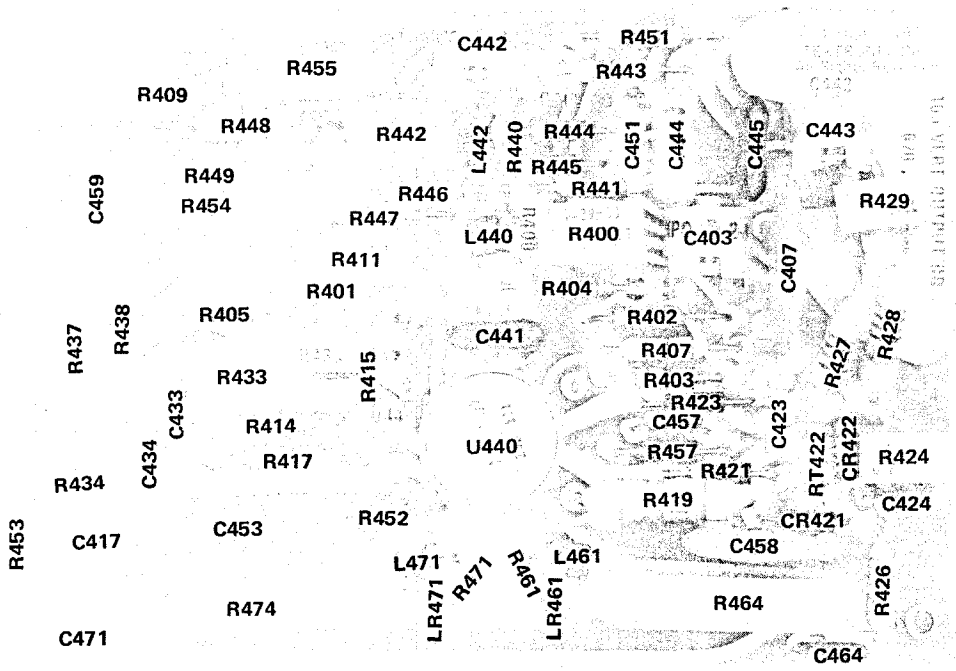

Fig. 7-10. A5 Vertical Output Amplifier circuit board.

(See M20159 insert for alternate version.)

FIG. 7-11B

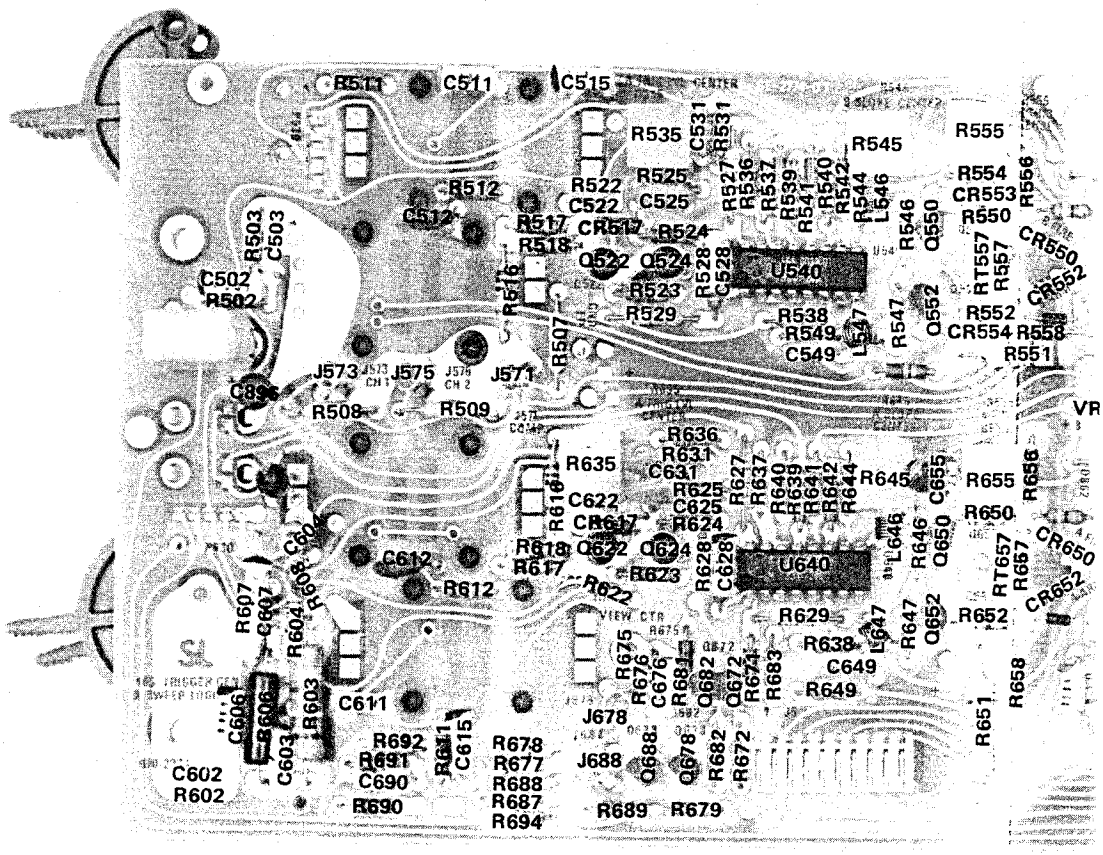

Ⓐ

Fig. 7-11A. P/O A8. Trigger Generator & Sweep Log

FIG. 7-11B

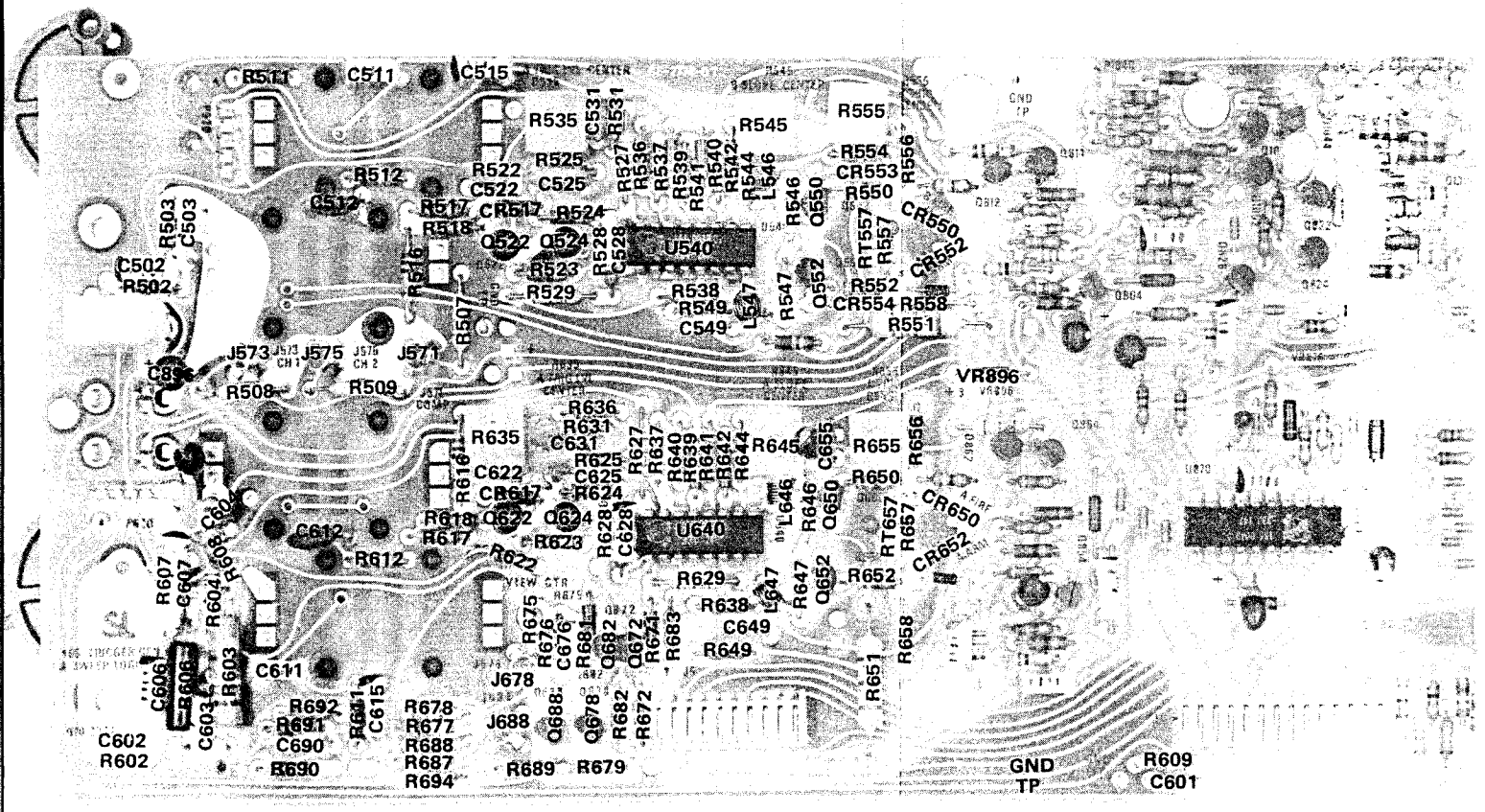

Ⓐ

Fig. 7-11A. P/O A8. Trigger Generator & Sweep Logic circuit board, SN B120000-up.

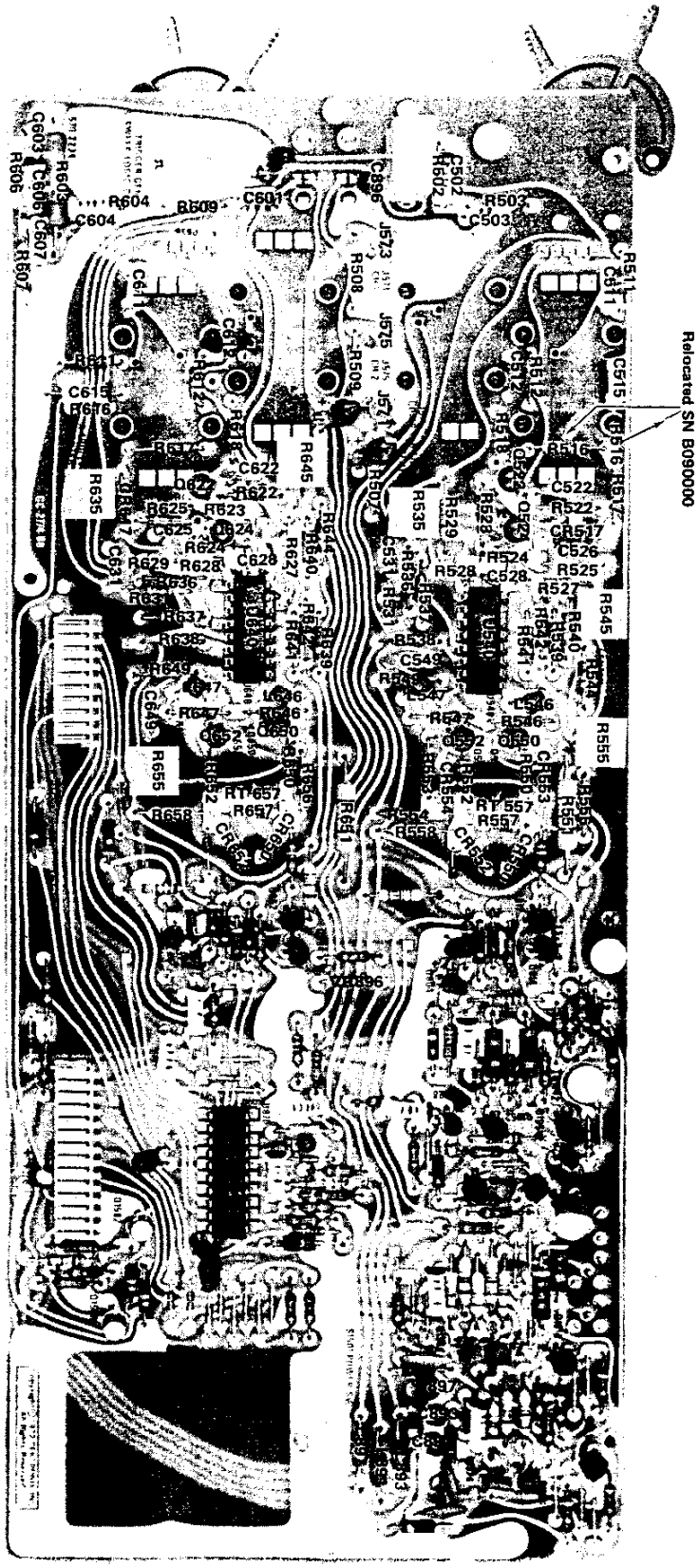

Fig. 7-11B. P/O A8. Trigger Generator & Sweep Logic circuit board below SN B120000.

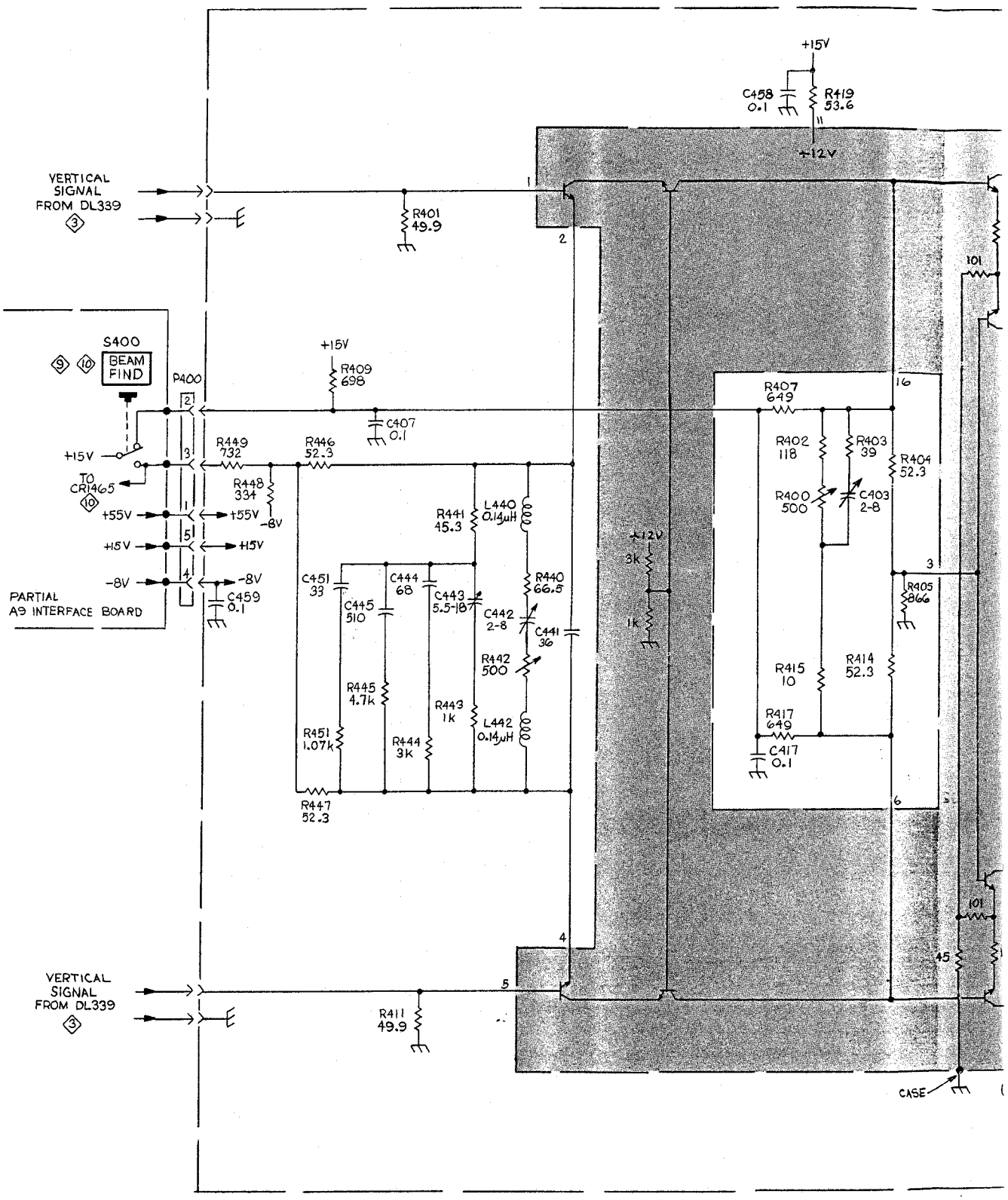
+15V
C458 0.1
R419 53.6
+12V
VERTICAL SIGNAL FROM DL339
R401 49.9
S400
BEAM FIND
P400
+15V
R409 698
C407 0.1
R407 649
R402 118
R403 39
R404 52.3
R400 500
C403 2-8
R449 732
R446 52.3
R448 334
-8V
TO CR1465
+55V
+15V
-8V
PARTIAL A9 INTERFACE BOARD
C459 0.1
R441 45.3
L440 0.14μH
R440 66.5
C451 33
C445 510
C444 68
C443 5.5-18
C442 2-8
C441 36
R442 500
R445 4.7k
R443 1k
L442 0.14μH
R451 1.07k
R444 3k
R447 52.3
+12V
3k
1k
R405 866
R415 10
R414 52.3
R417 649
C417 0.1
101
45
CASE

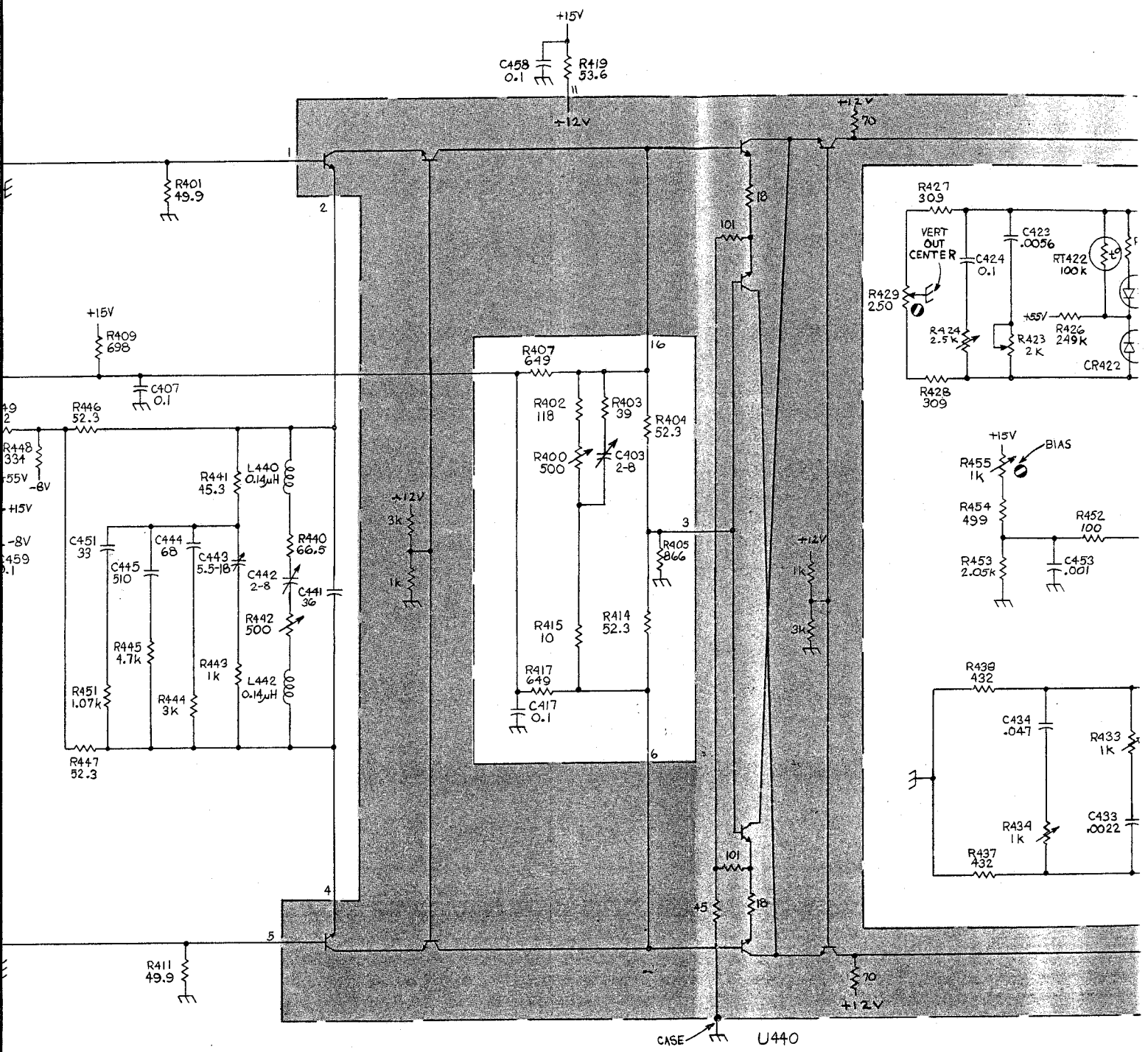

COPE

B 2

VERTICA

(SEE M20159 INSERT FO
VERSION OF VERTICAL
AMPLIFIER)

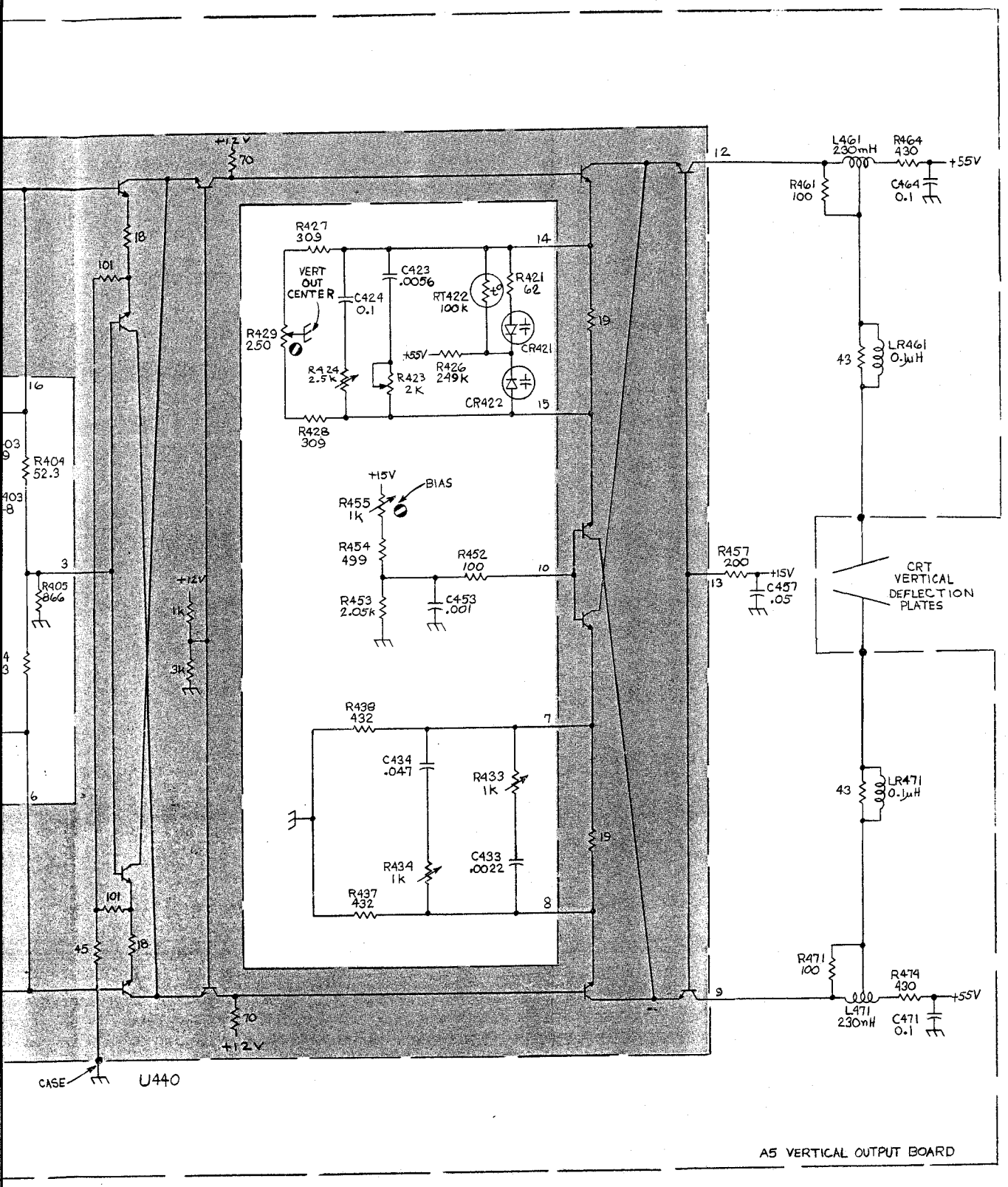

670-2238-

VERTICAL OUTPUT AMPLIFIER ④

(SEE M20159 INSERT FOR ALTERNATE VERSION OF VERTICAL OUTPUT AMPLIFIER)

JEN REV APR 1974

Ⓑ2

THE QUALITY OF
THIS PAGE IS
THE BEST THAT
IS AVAILABLE

Fig. 7-12. P/O A9 Interface c

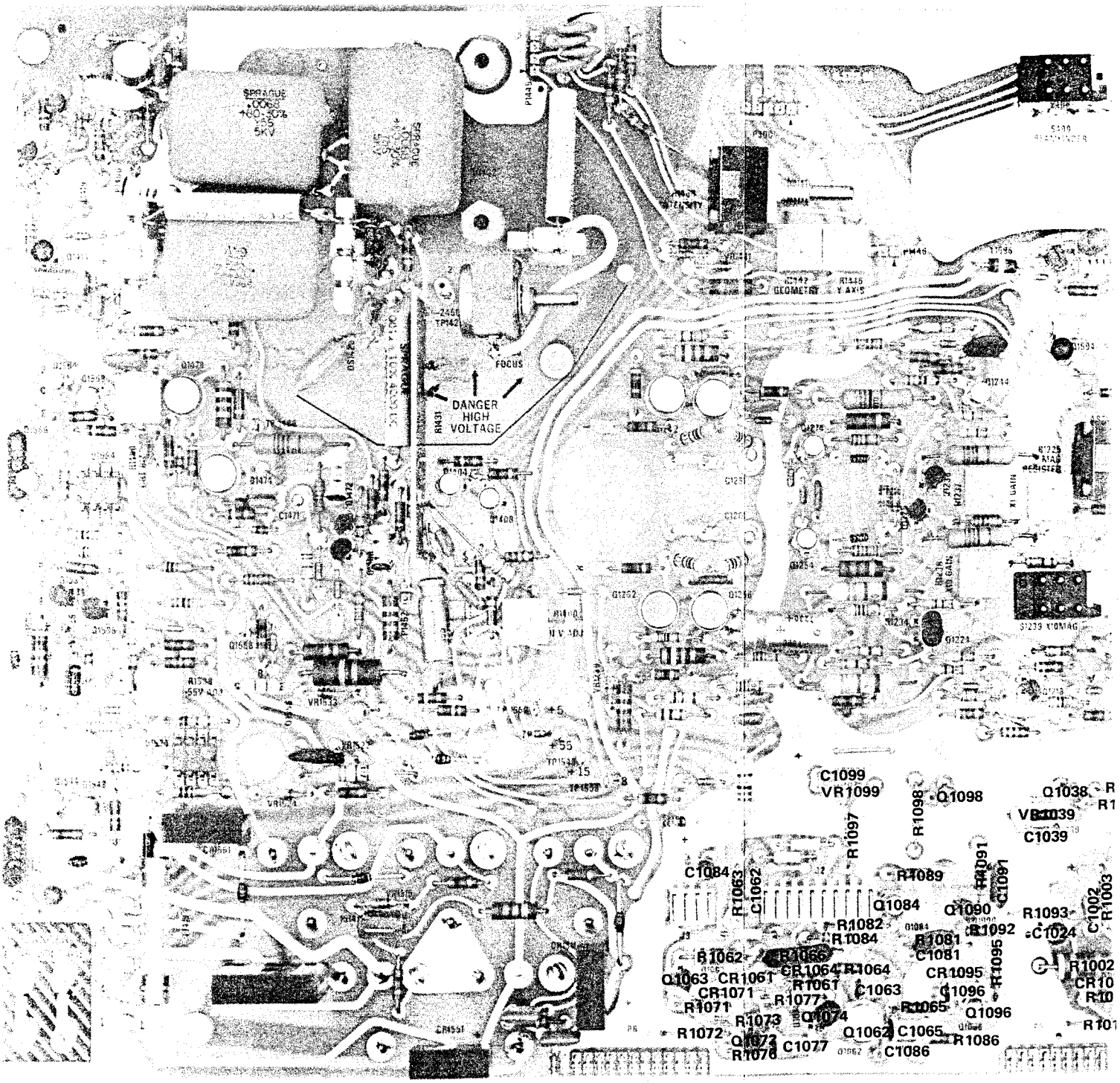

Fig. 7-12. P/O A9 Interface circuit board.

For Service Manuals
MAURITRON SERVICES
8 Cherry Tree Road, Chinnor
Oxfordshire, OX9 4QY.
Tel (01844) 351694
Fax (01844) 352554
email:- mauritron@dial.pipex.com

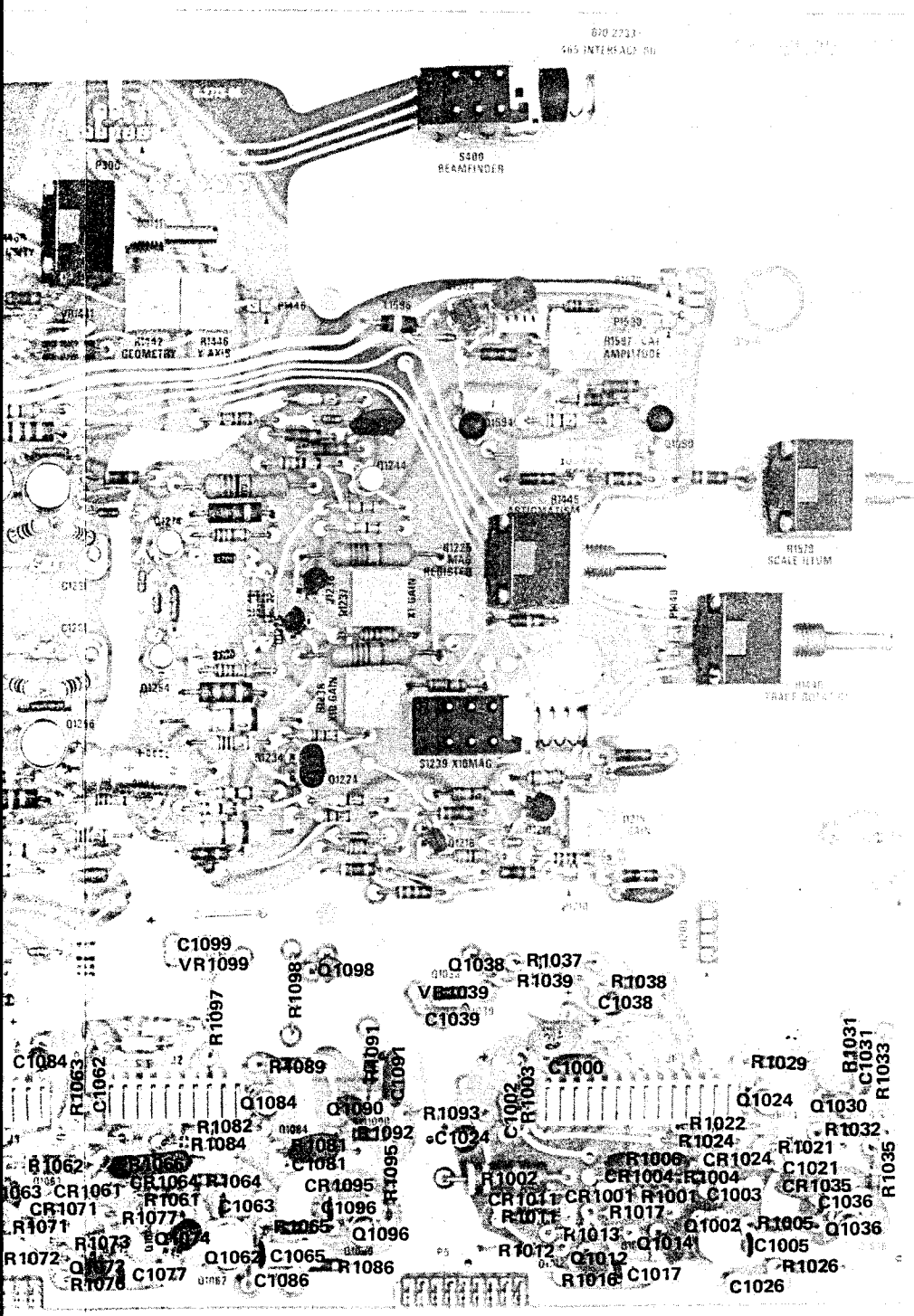

D A9 Interface circuit board.

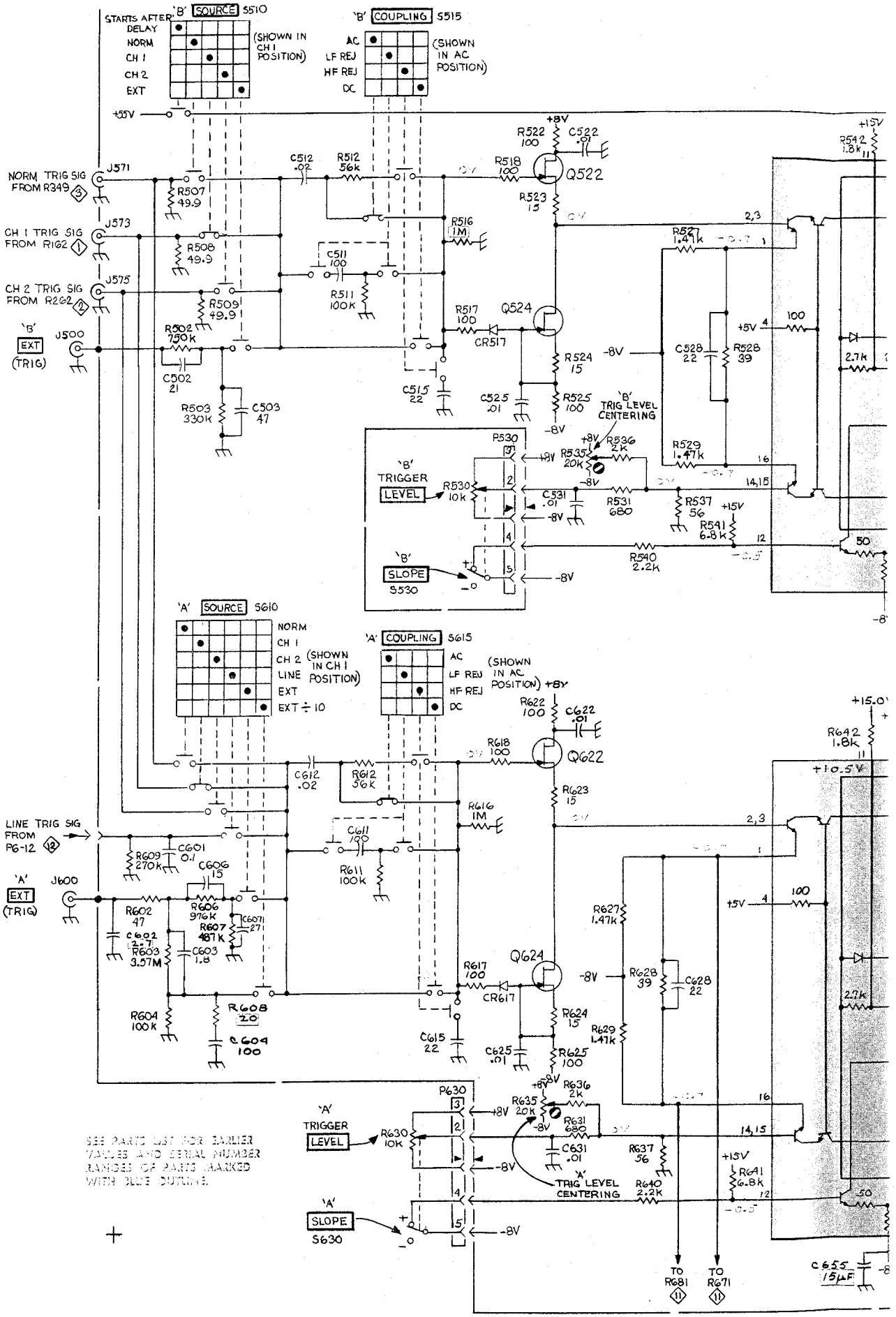

SEE PARTS LIST FOR EARLIER VALUES AND SERIAL NUMBER RANGES OF PARTS MARKED WITH BLUE OUTLINE.

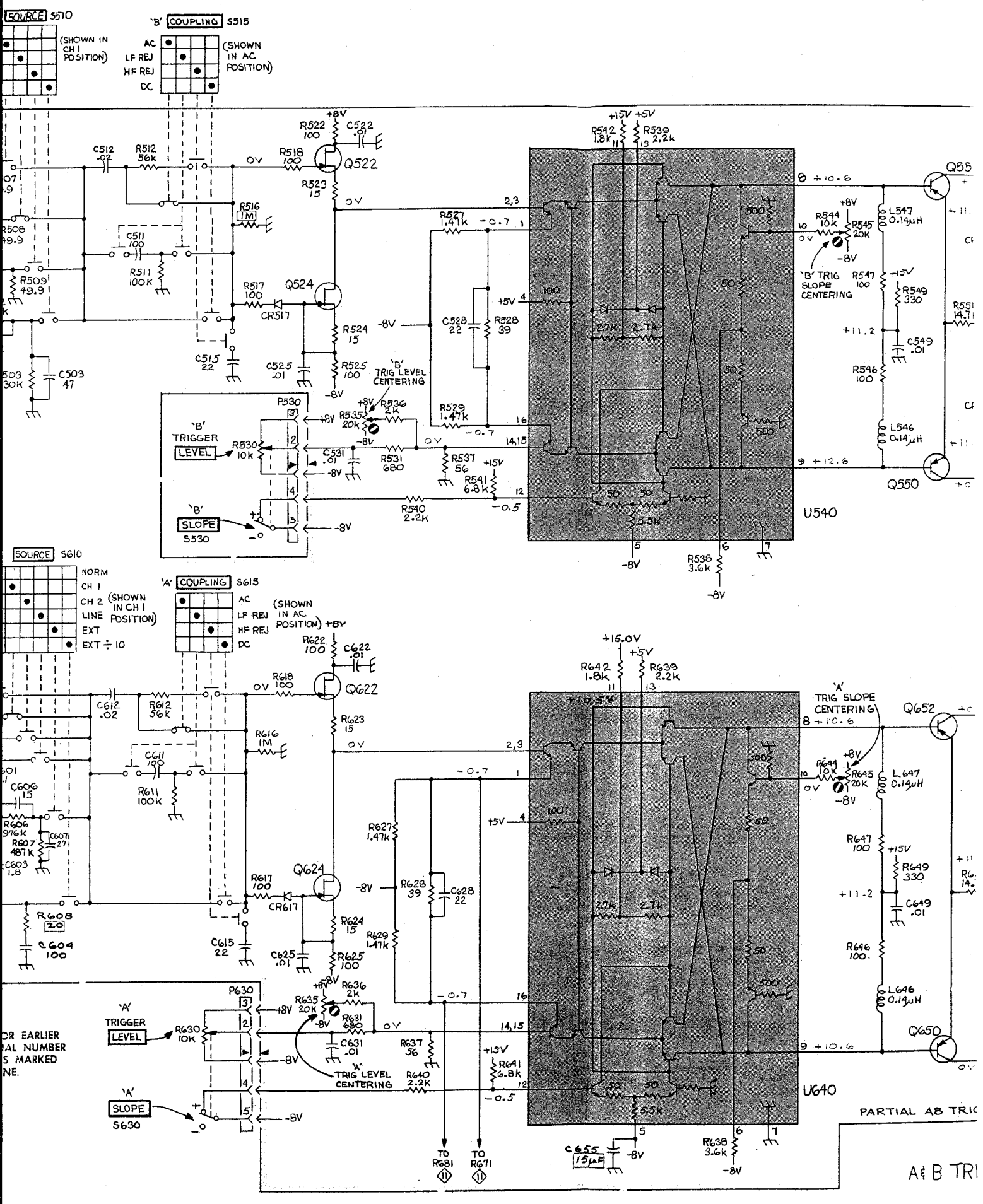
SOURCE S510
(SHOWN IN CH 1 POSITION)
'B' COUPLING S515
AC
LF REJ
HF REJ
DC
(SHOWN IN AC POSITION)
Q522
Q524
U540
Q550
'B' TRIG SLOPE CENTERING
'B' TRIG LEVEL CENTERING
'B' TRIGGER LEVEL
'B' SLOPE S530
SOURCE S610
NORM
CH 1
CH 2
LINE
EXT
EXT ÷ 10
(SHOWN IN CH 1 POSITION)
'A' COUPLING S615
(SHOWN IN AC POSITION)
Q622
Q624
U640
Q652
Q650
'A' TRIG SLOPE CENTERING
'A' TRIGGER LEVEL
'A' TRIG LEVEL CENTERING
'A' SLOPE S630
TO R681
TO R671
PARTIAL A&B TRIG
A&B TRIG

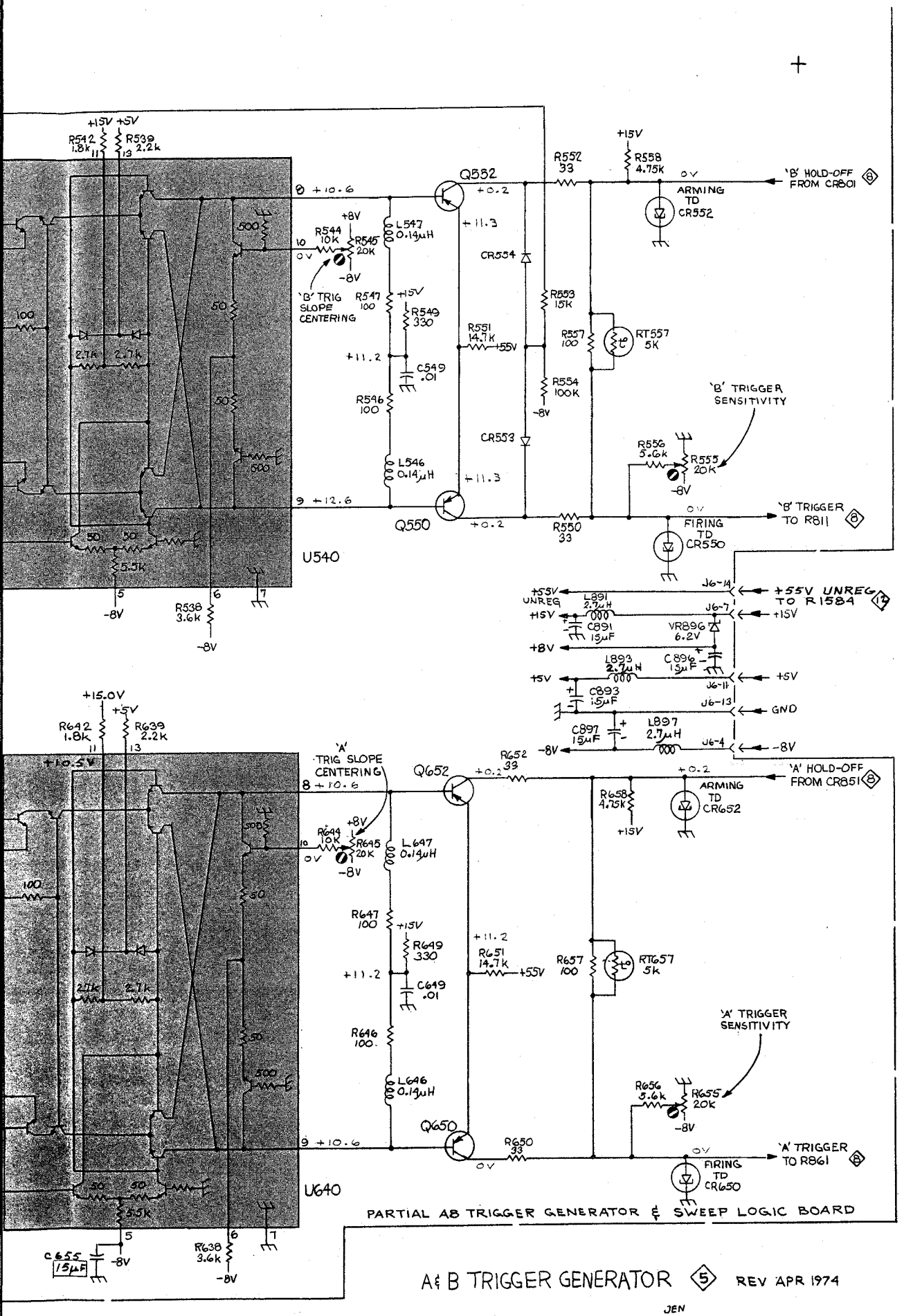

A & B TRIGGER GENERATOR (5) REV APR 1974

JEN

(B)1

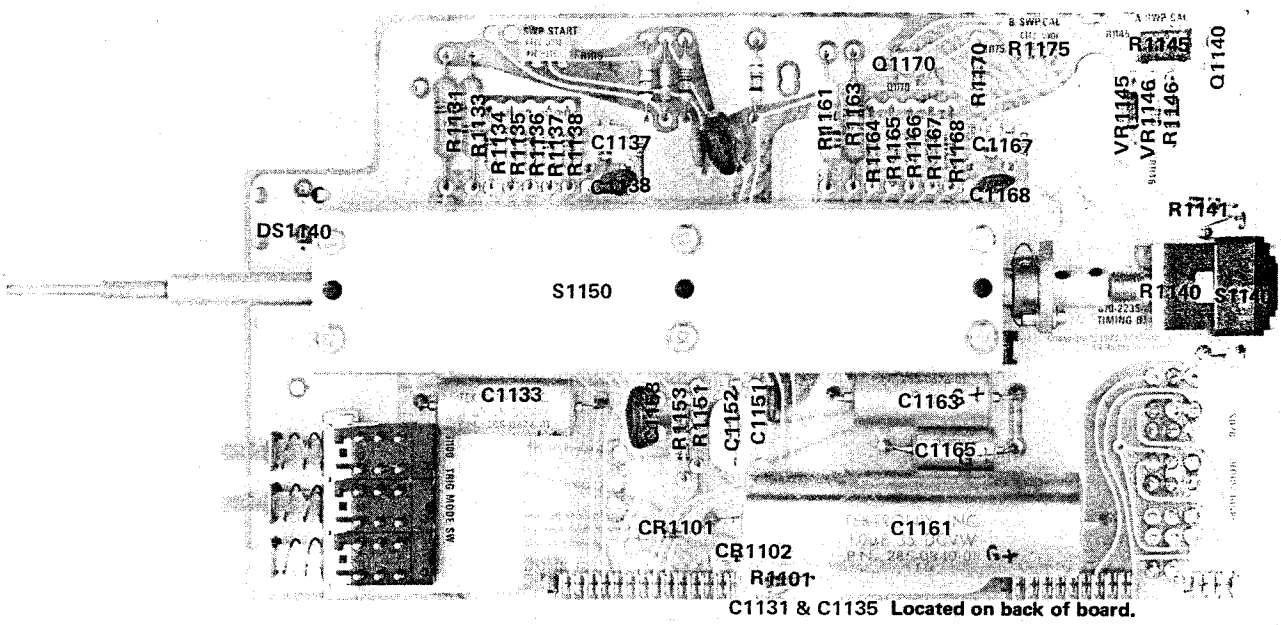

Fig. 7-13. P/O A7 Timing circuit board.

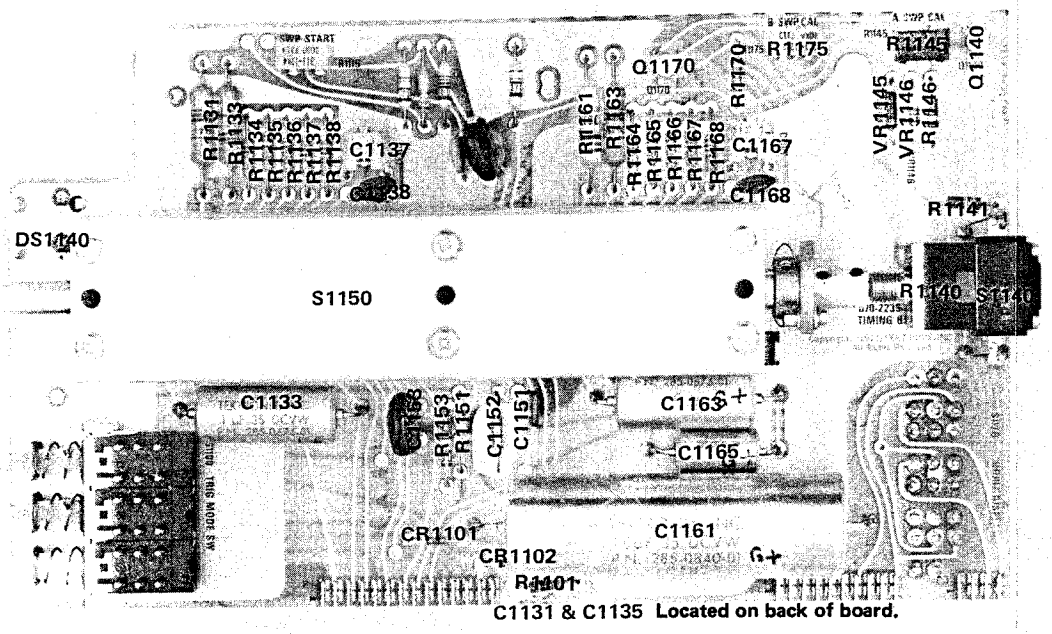

Fig. 7-13. P/O A7 Timing circuit board.

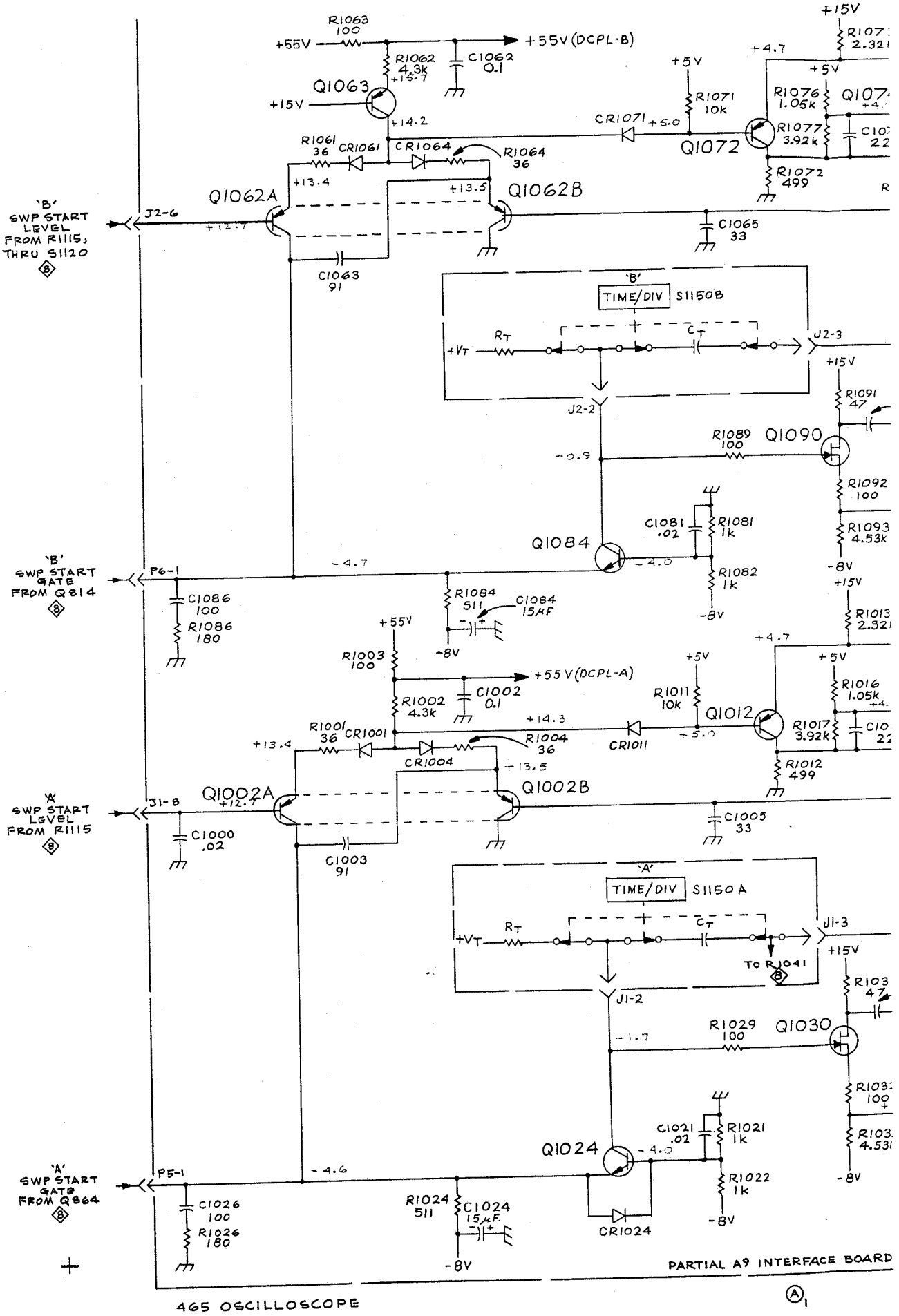
'B' SWP START LEVEL FROM R1115, THRU S1120
J2-6
+12.7
Q1062A
Q1062B
+13.4
+13.5
R1061 36
CR1061
CR1064
R1064 36
R1063 100
+55V
R1062 4.3k
+15.7
C1062 0.1
+55V (DCPL-B)
Q1063
+15V
+14.2
C1063 91
C1065 33
CR1071
+5.0
R1071 10k
+5V
Q1072
+4.7
R1076 1.05k
R1077 3.92k
R1072 499
+15V
'B'
TIME/DIV S1150B
RT
CT
+VT
J2-3
J2-2
-0.9
R1089 100
Q1090
R1091 47
R1092 100
R1093 4.53k
-8V
C1081 .02
R1081 1k
R1082 1k
Q1084
-4.0
'B' SWP START GATE FROM Q814
P6-1
-4.7
C1086 100
R1086 180
R1084 511
C1084 15μF
+55V
R1003 100
+55V (DCPL-A)
R1002 4.3k
C1002 0.1
R1011 10k
Q1012
+14.3
R1001 36
CR1001
R1004 36
CR1004
CR1011
+5.0
R1017 3.92k
R1012 499
R1013 2.321
R1016 1.05k
'A' SWP START LEVEL FROM R1115
J1-8
Q1002A
Q1002B
C1000 .02
C1003 91
C1005 33
'A'
TIME/DIV S1150A
J1-3
J1-2
To R1041
-1.7
R1029 100
Q1030
R1031 100
R1033 4.53k
C1021 .02
R1021 1k
R1022 1k
Q1024
-4.6
'A' SWP START GATE FROM Q864
P5-1
C1026 100
R1026 180
R1024 511
C1024 15μF
CR1024
PARTIAL A9 INTERFACE BOARD
465 OSCILLOSCOPE
A1

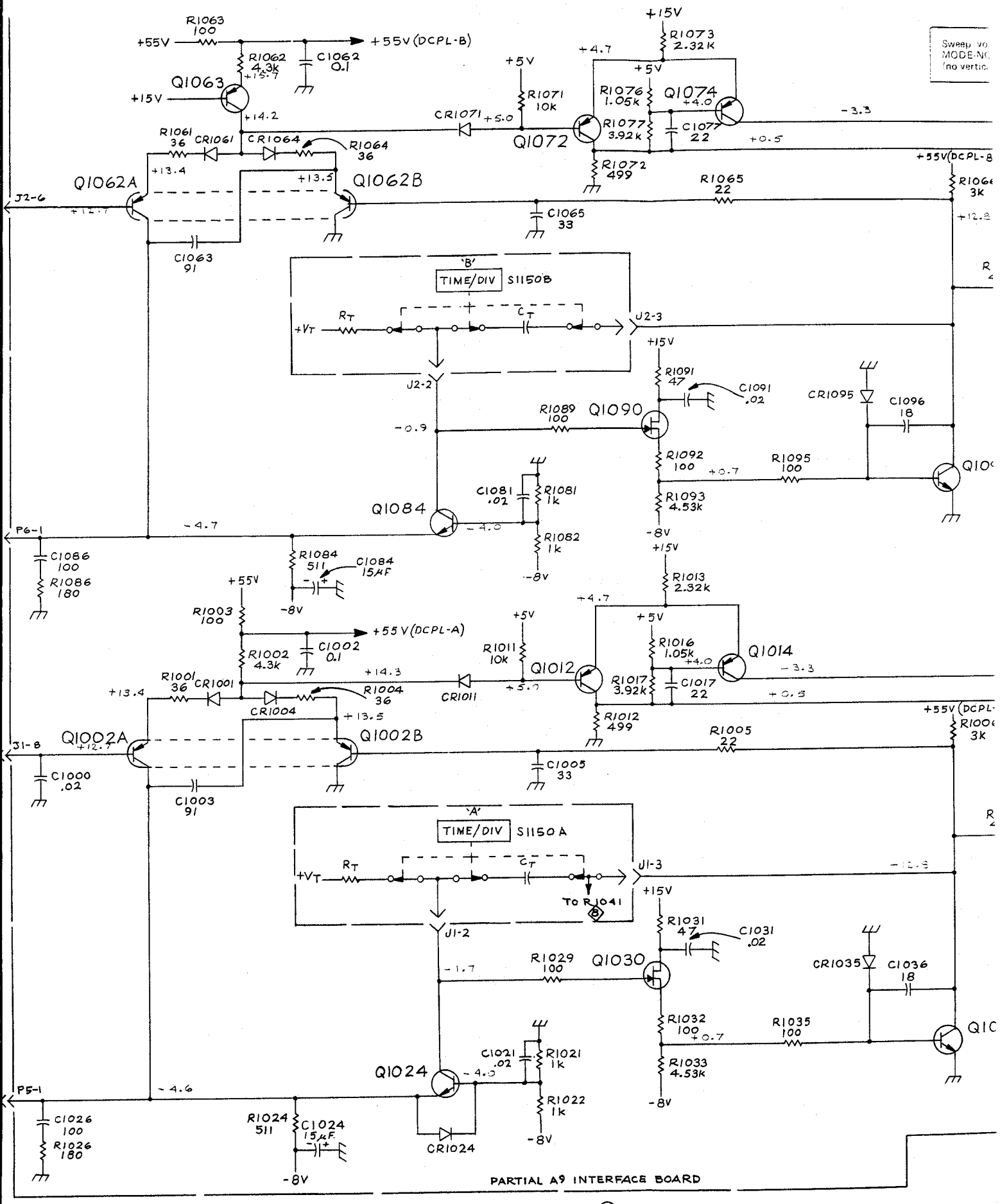

PARTIAL A9 INTERFACE BOARD

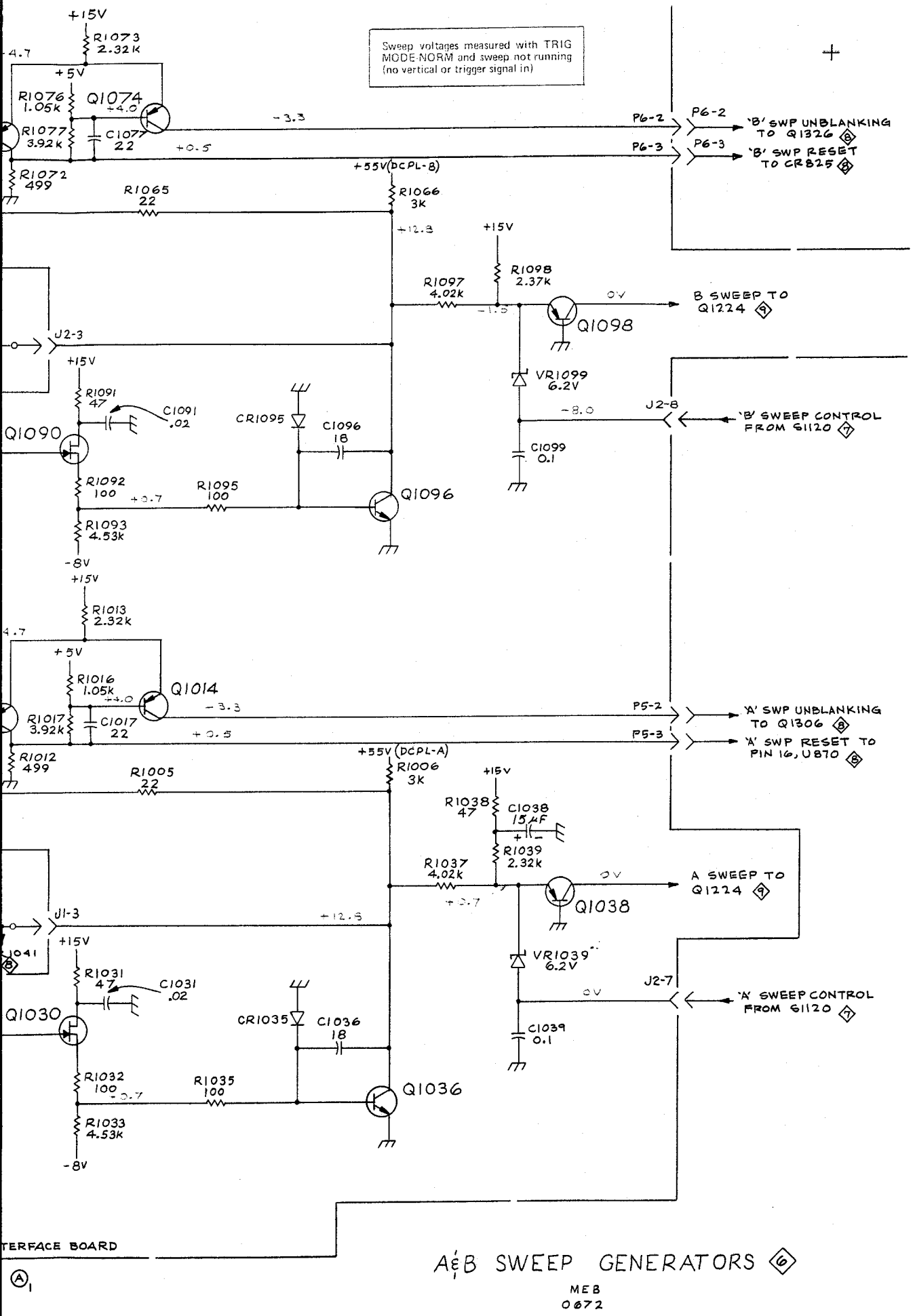

A&B SWEEP GENERATORS

MEB
0672

THE QUALITY OF
THIS PAGE IS
THE BEST THAT
IS AVAILABLE

FIG. 7-14B

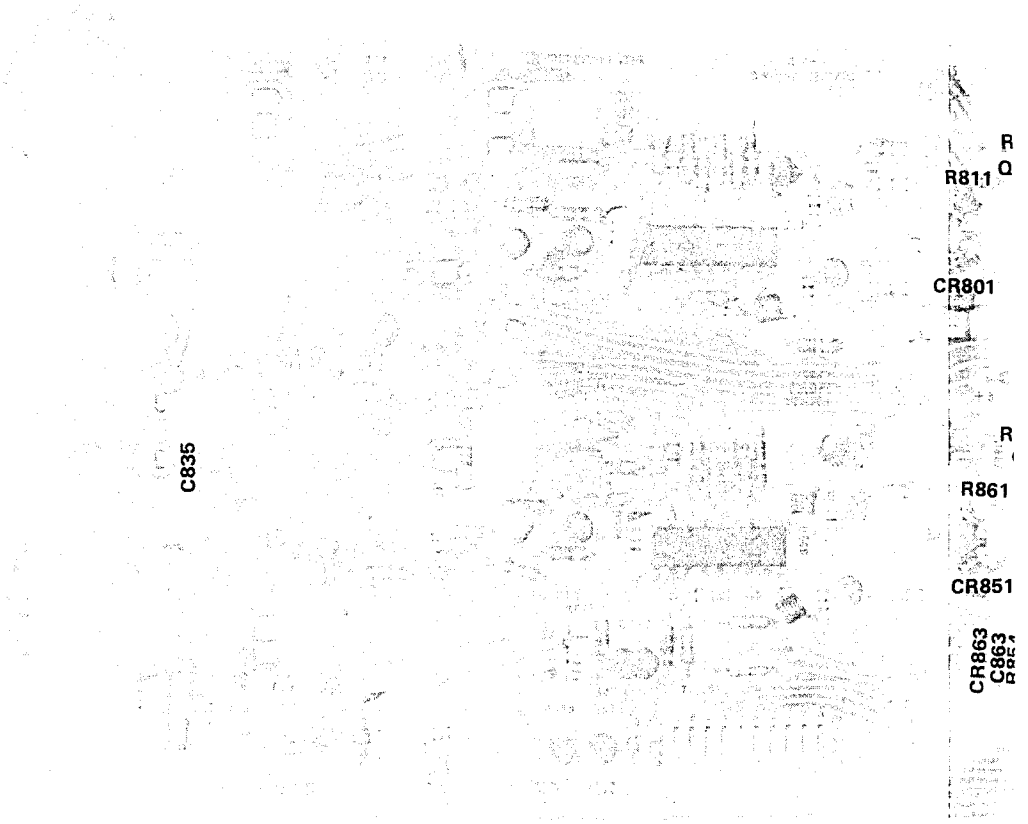

Ⓐ

Fig. 7-14A. P/O A8. Trigger Generator & Sweep L

FIG. 7-14B

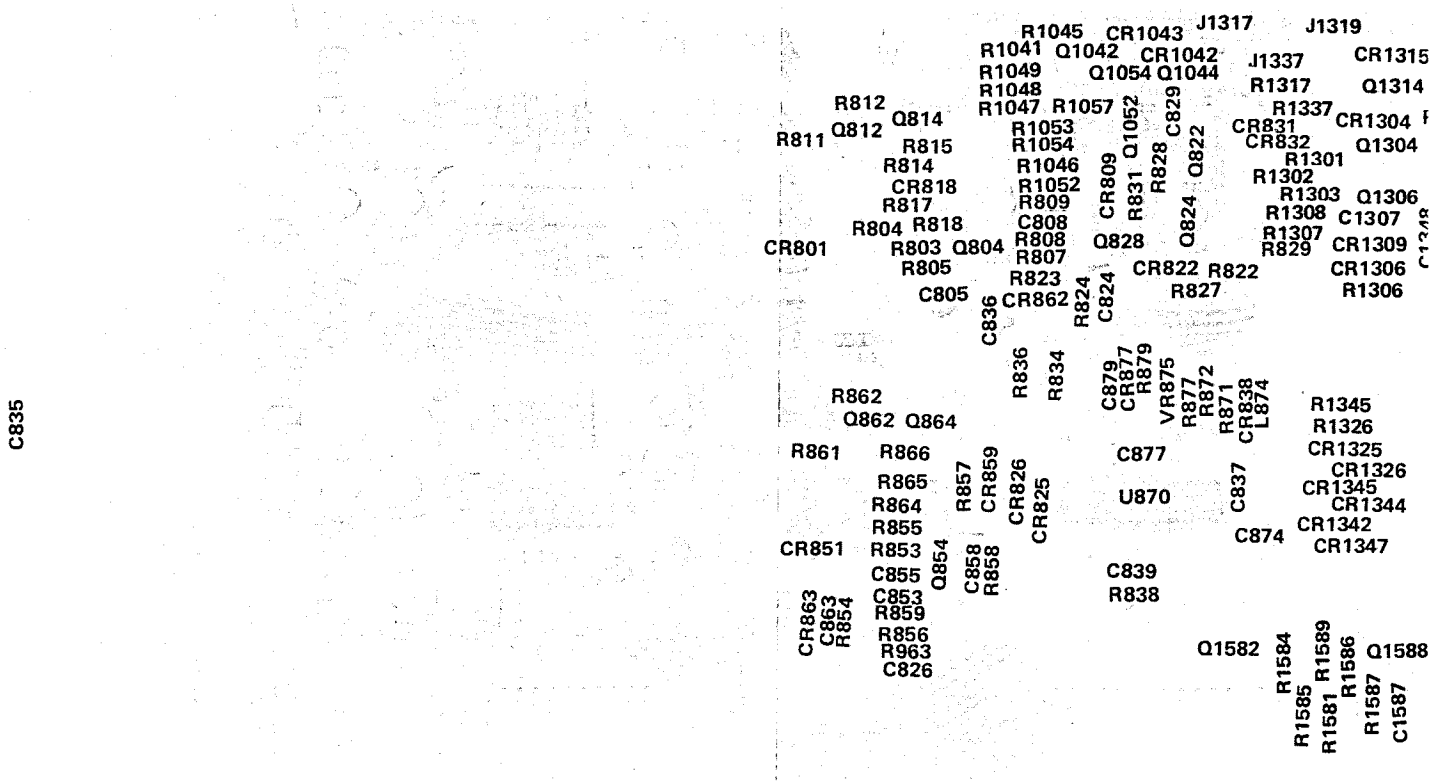

Fig. 7-14A. P/O A8. Trigger Generator & Sweep Logic circuit board, SN B120000-up.

Located

J131

J131

J133

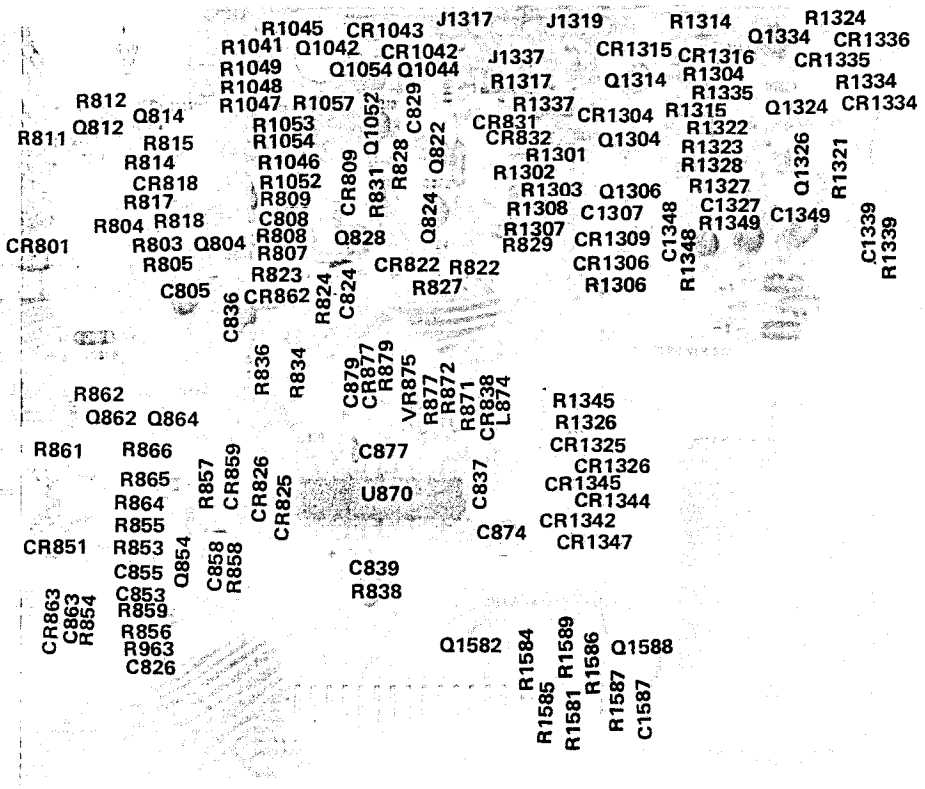

Located on back of board:

J1317
J1319
J1337

nerator & Sweep Logic circuit board, SN B120000-up.

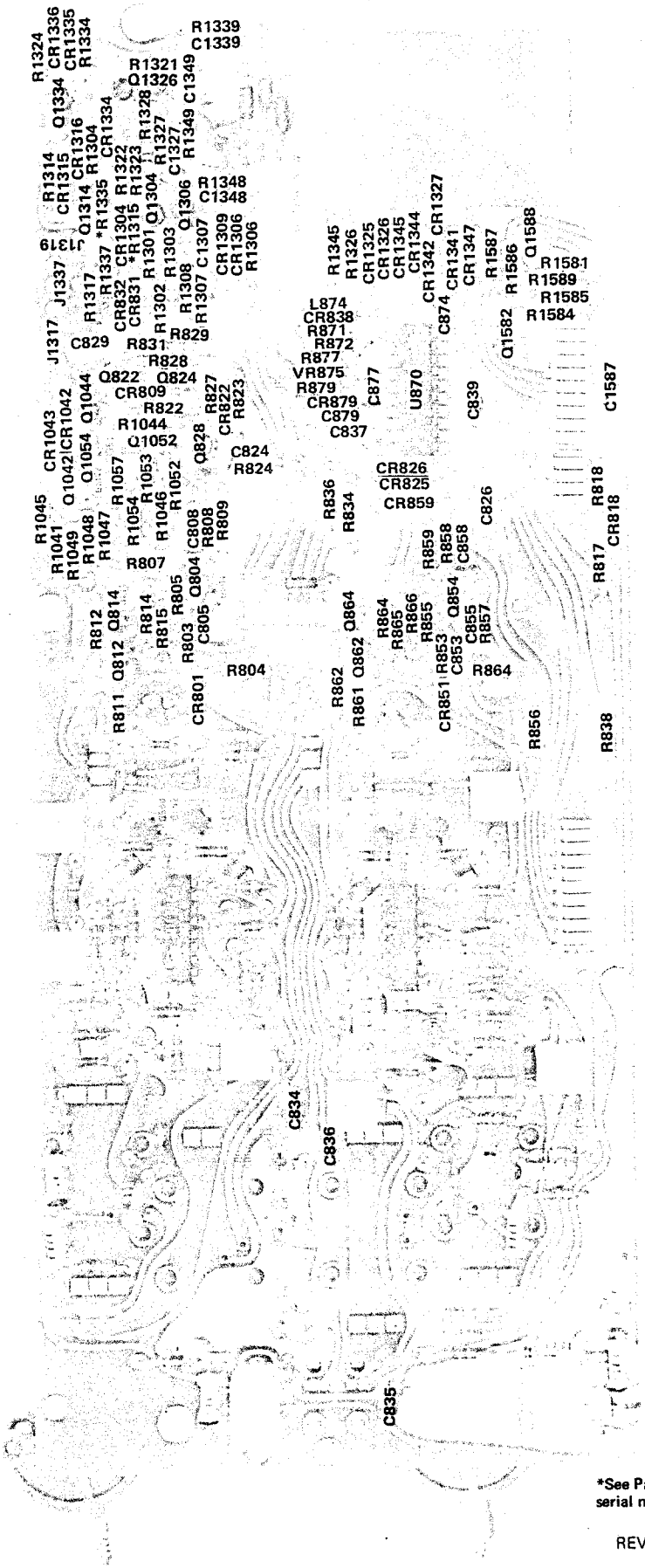

*See Parts List for serial number ranges.

REV. JAN 1974

Fig. 7-14B. P/O A8. Trigger Generator & Sweep Logic circuit board below SN B120000. ©

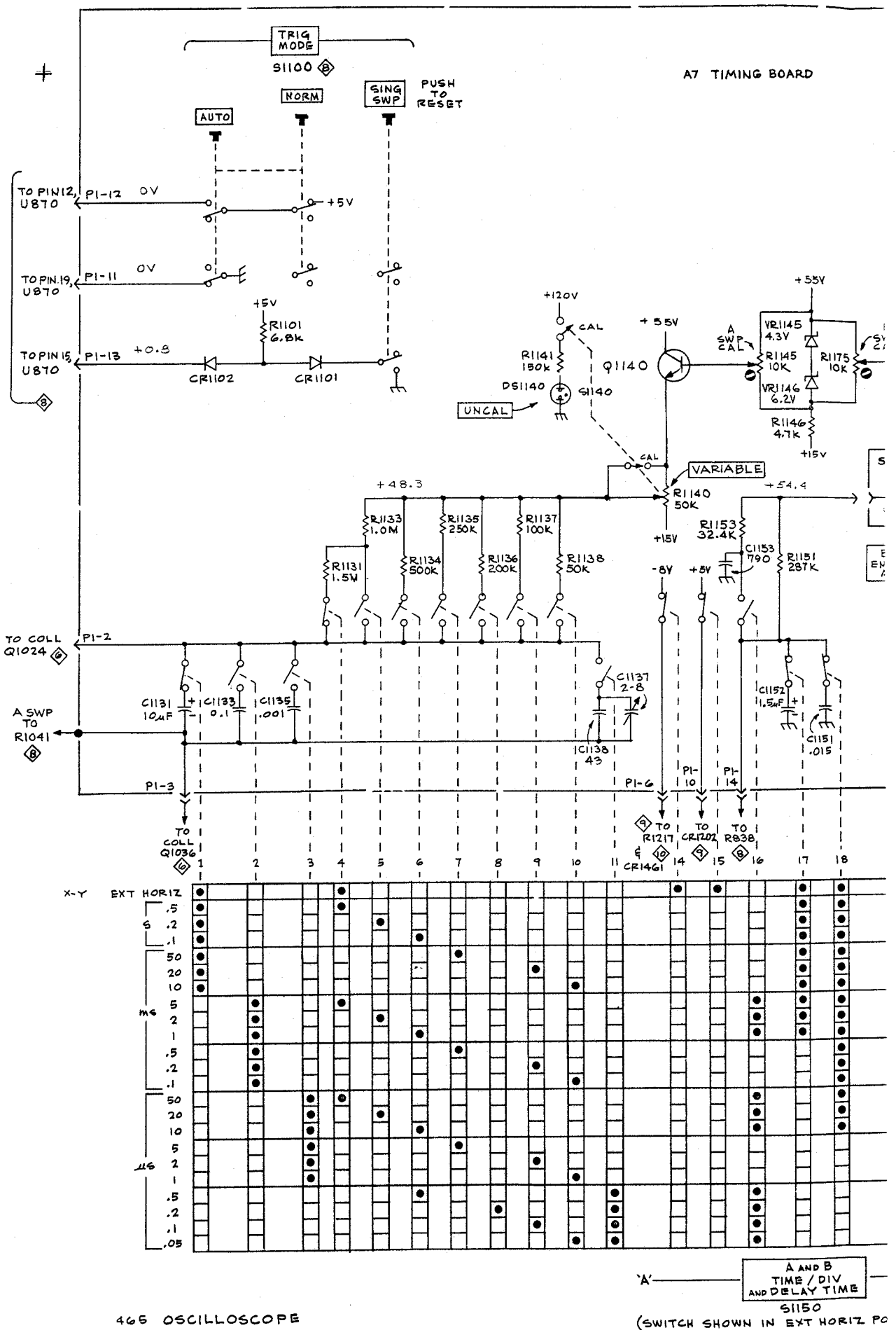

465 OSCILLOSCOPE

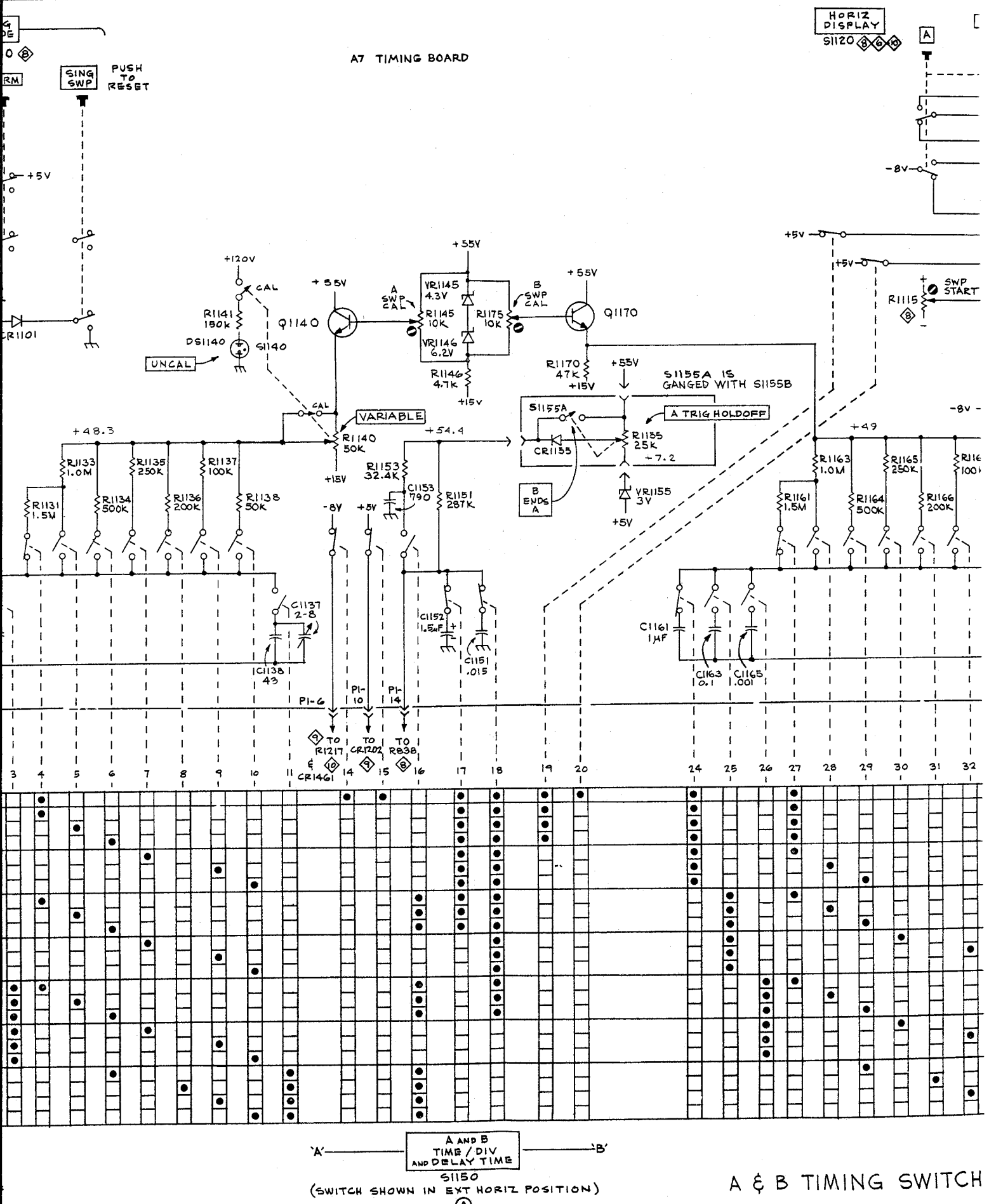
A7 TIMING BOARD
SING SWP
PUSH TO RESET
HORIZ DISPLAY
S1120
+5V
-8V
CR1101
+120V
CAL
R1141 150k
DS1140
S1140
UNCAL
Q1140
+55V
VR1145 4.3V
A SWP CAL
R1145 10K
R1175 10K
B SWP CAL
VR1146 6.2V
R1146 4.7k
+15V
Q1170
R1170 47K
S1155A IS GANGED WITH S1155B
S1155A
A TRIG HOLDOFF
CR1155
R1155 25K
+7.2
B ENDS A
VR1155 3V
R1115
SWP START
VARIABLE
R1140 50K
+48.3
+54.4
+49
R1133 1.0M
R1135 250K
R1137 100K
R1131 1.5M
R1134 500K
R1136 200K
R1138 50K
R1153 32.4K
C1153 790
R1151 287K
R1163 1.0M
R1165 250K
R1161 1.5M
R1164 500K
R1166 200K
C1137 2-8
C1138 43
C1152 1.5μF
C1151 .015
C1161 1μF
C1163 0.1
C1165 .001
P1-6
P1-10
P1-14
TO R1217 & CR1461
TO CR1202
TO R838
A AND B TIME / DIV AND DELAY TIME
S1150
(SWITCH SHOWN IN EXT HORIZ POSITION)
A & B TIMING SWITCH

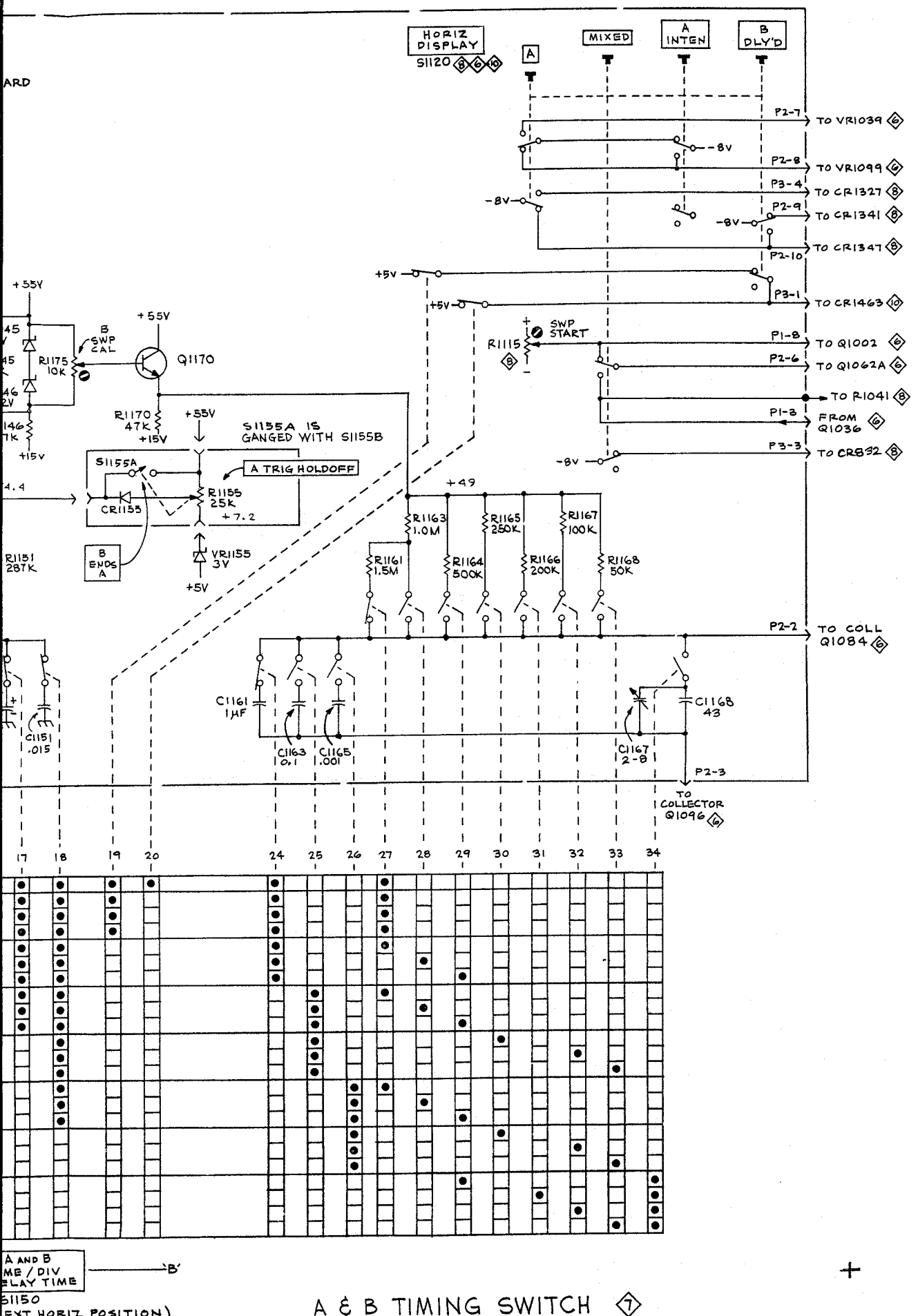

A & B TIMING SWITCH 7

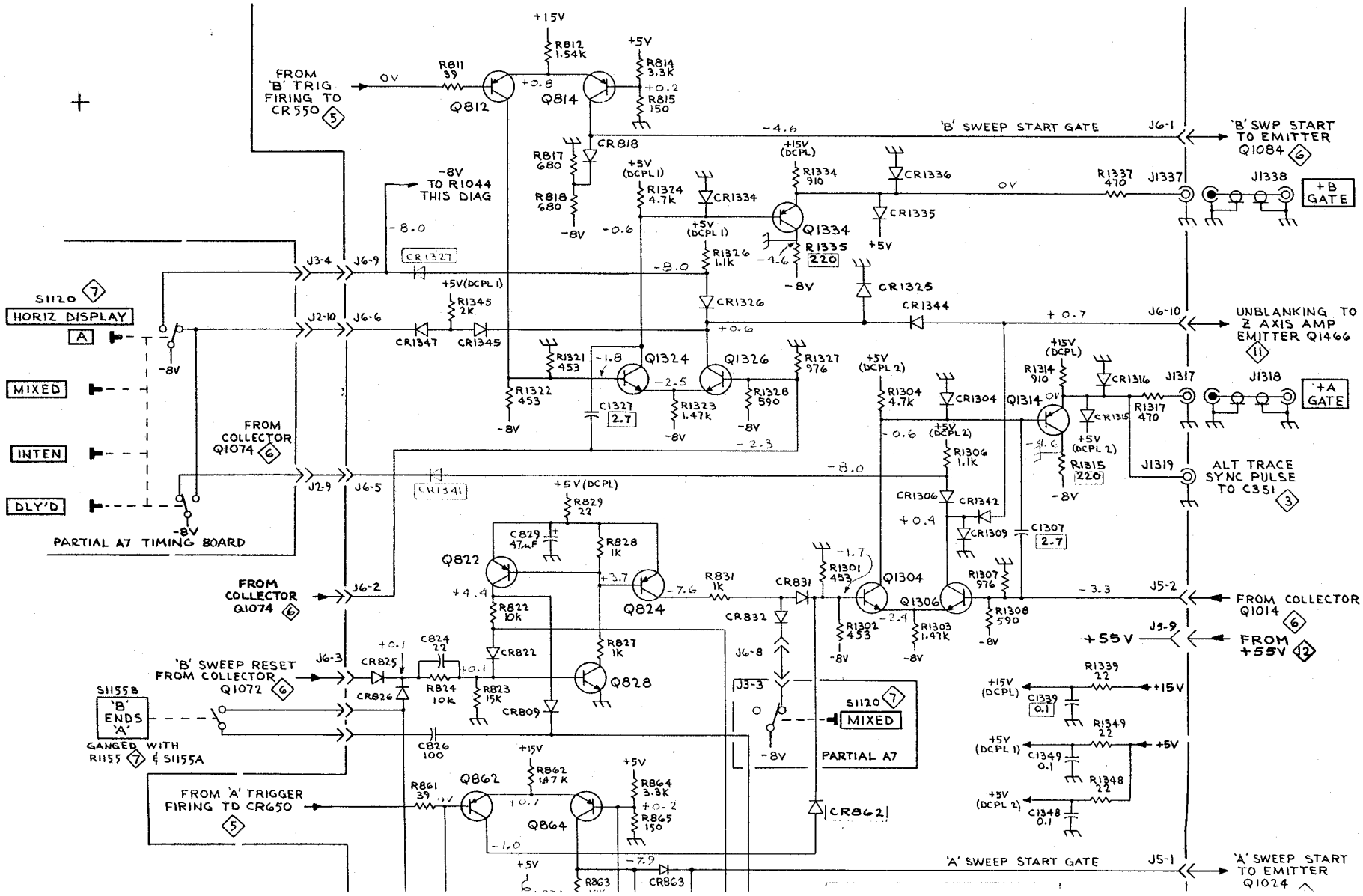
FROM 'B' TRIG FIRING TO CR550 5
'B' SWEEP START GATE
'B' SWP START TO EMITTER Q1084 6
+B GATE
UNBLANKING TO Z AXIS AMP EMITTER Q1466 11
+A GATE
ALT TRACE SYNC PULSE TO C351 3
FROM COLLECTOR Q1014 6
FROM +55V 12
+55V
S1120 7
HORIZ DISPLAY
A
MIXED
INTEN
DLY'D
PARTIAL A7 TIMING BOARD
FROM COLLECTOR Q1074 6
'B' SWEEP RESET FROM COLLECTOR Q1072 6
S1155B 'B' ENDS 'A'
GANGED WITH R1155 7 & S1155A
FROM 'A' TRIGGER FIRING TO CR650 5
'A' SWEEP START GATE
'A' SWEEP START TO EMITTER Q1024
-8V TO R1044 THIS DIAG
PARTIAL A7

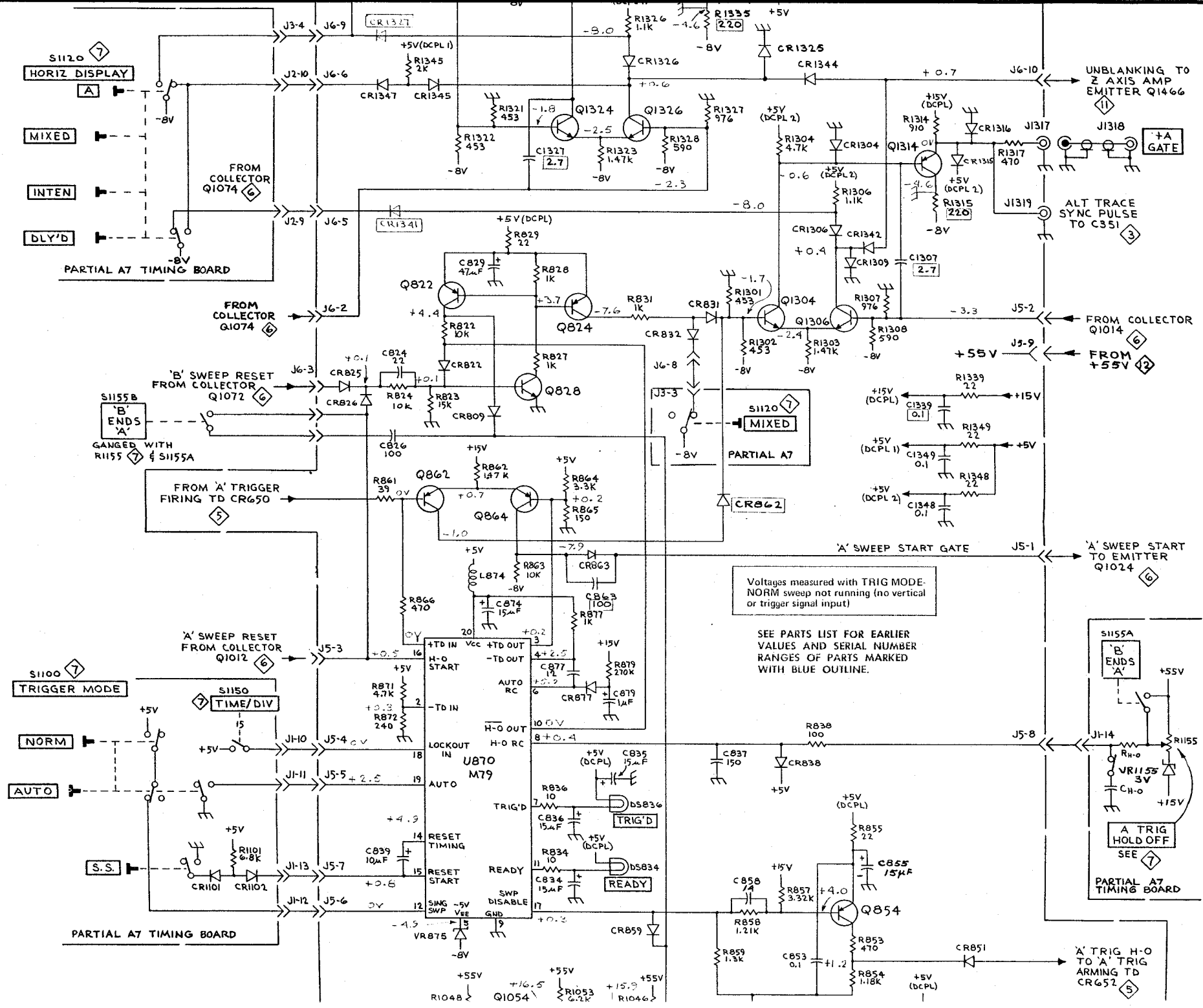
S1120
HORIZ DISPLAY
A
MIXED
INTEN
DLY'D
PARTIAL A7 TIMING BOARD
FROM COLLECTOR Q1074
FROM COLLECTOR Q1014
'B' SWEEP RESET FROM COLLECTOR Q1072
S1155B
'B' ENDS 'A'
GANGED WITH R1155 & S1155A
FROM 'A' TRIGGER FIRING TD CR650
'A' SWEEP RESET FROM COLLECTOR Q1012
S1100
TRIGGER MODE
NORM
AUTO
S.S.
S1150
TIME/DIV
PARTIAL A7 TIMING BOARD
U870
M79
TRIG'D
READY
UNBLANKING TO Z AXIS AMP EMITTER Q1466
+A GATE
ALT TRACE SYNC PULSE TO C351
FROM COLLECTOR Q1014
+55V
FROM +55V
'A' SWEEP START GATE
'A' SWEEP START TO EMITTER Q1024
Voltages measured with TRIG MODE-NORM sweep not running (no vertical or trigger signal input)
SEE PARTS LIST FOR EARLIER VALUES AND SERIAL NUMBER RANGES OF PARTS MARKED WITH BLUE OUTLINE.
A TRIG HOLD OFF
SEE 7
PARTIAL A7 TIMING BOARD
'A' TRIG H-O TO 'A' TRIG ARMING TD CR652

OPE

SYWEEP

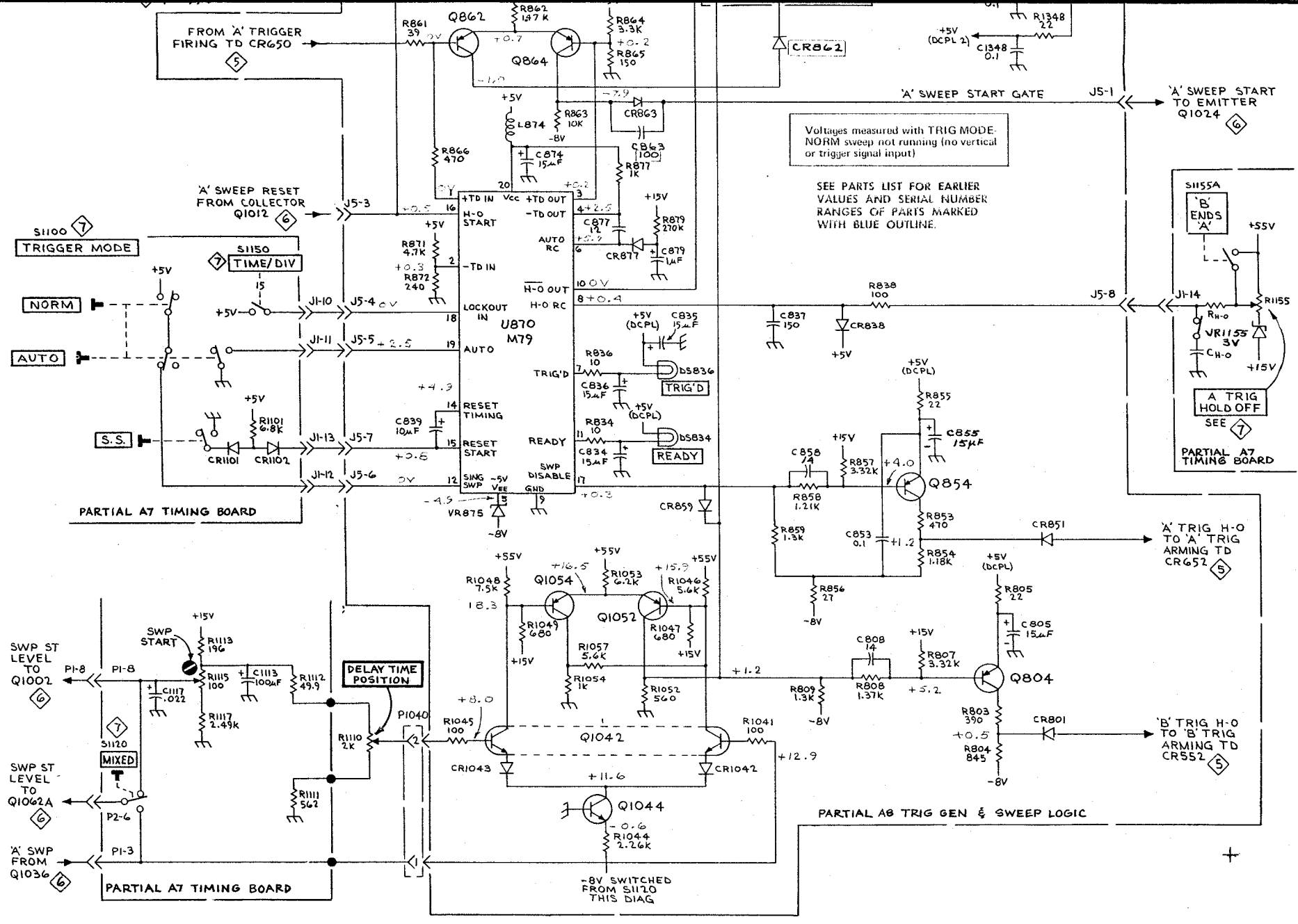
SWEEP & Z AXIS LOGIC
FROM 'A' TRIGGER FIRING TO CR650
'A' SWEEP RESET FROM COLLECTOR Q1012
S1100 TRIGGER MODE
NORM
AUTO
S.S.
S1150 TIME/DIV
PARTIAL A7 TIMING BOARD
U870 M79
+TD IN
H-O START
-TD IN
LOCKOUT IN
AUTO
RESET TIMING
RESET START
SING SWP
+TD OUT
-TD OUT
AUTO RC
H-O OUT
H-O RC
TRIG'D
READY
SWP DISABLE
GND
Vcc
VEE
'A' SWEEP START GATE
'A' SWEEP START TO EMITTER Q1024
Voltages measured with TRIG MODE-NORM sweep not running (no vertical or trigger signal input)
SEE PARTS LIST FOR EARLIER VALUES AND SERIAL NUMBER RANGES OF PARTS MARKED WITH BLUE OUTLINE.
S1155A 'B' ENDS 'A'
A TRIG HOLD OFF
PARTIAL A7 TIMING BOARD
'A' TRIG H-O TO 'A' TRIG ARMING TO CR652
'B' TRIG H-O TO 'B' TRIG ARMING TO CR552
SWP ST LEVEL TO Q1002
SWP ST LEVEL TO Q1062A
'A' SWP FROM Q1036
SWP START
S1120 MIXED
DELAY TIME POSITION
P1040
-8V SWITCHED FROM S1120 THIS DIAG
PARTIAL A8 TRIG GEN & SWEEP LOGIC
mgf 973

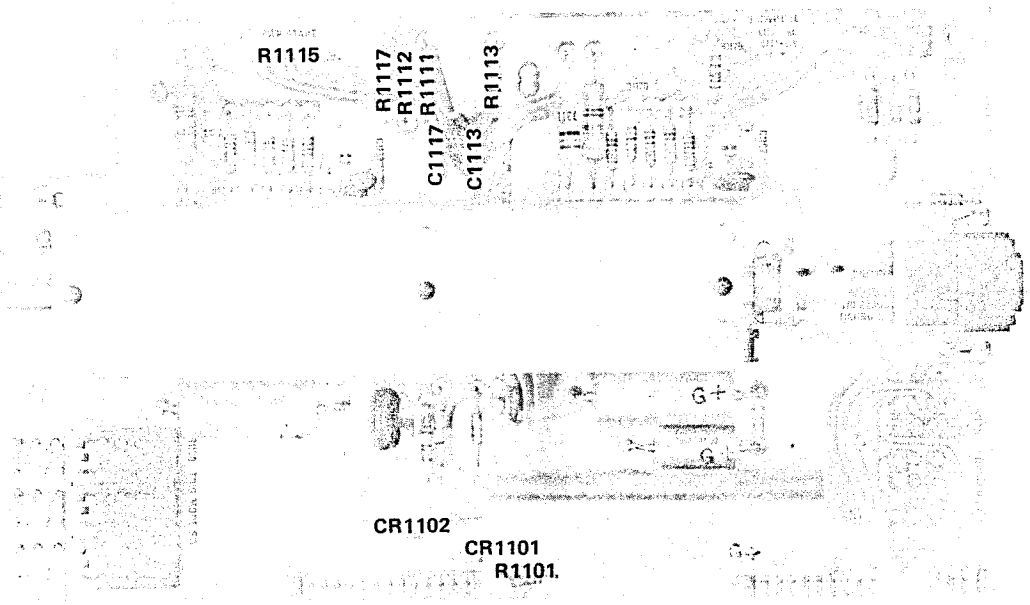

Fig. 7-15. P/O A7 Timing circuit board.

THE QUALITY OF
THIS PAGE IS
THE BEST THAT
IS AVAILABLE

FIG. 7-16B

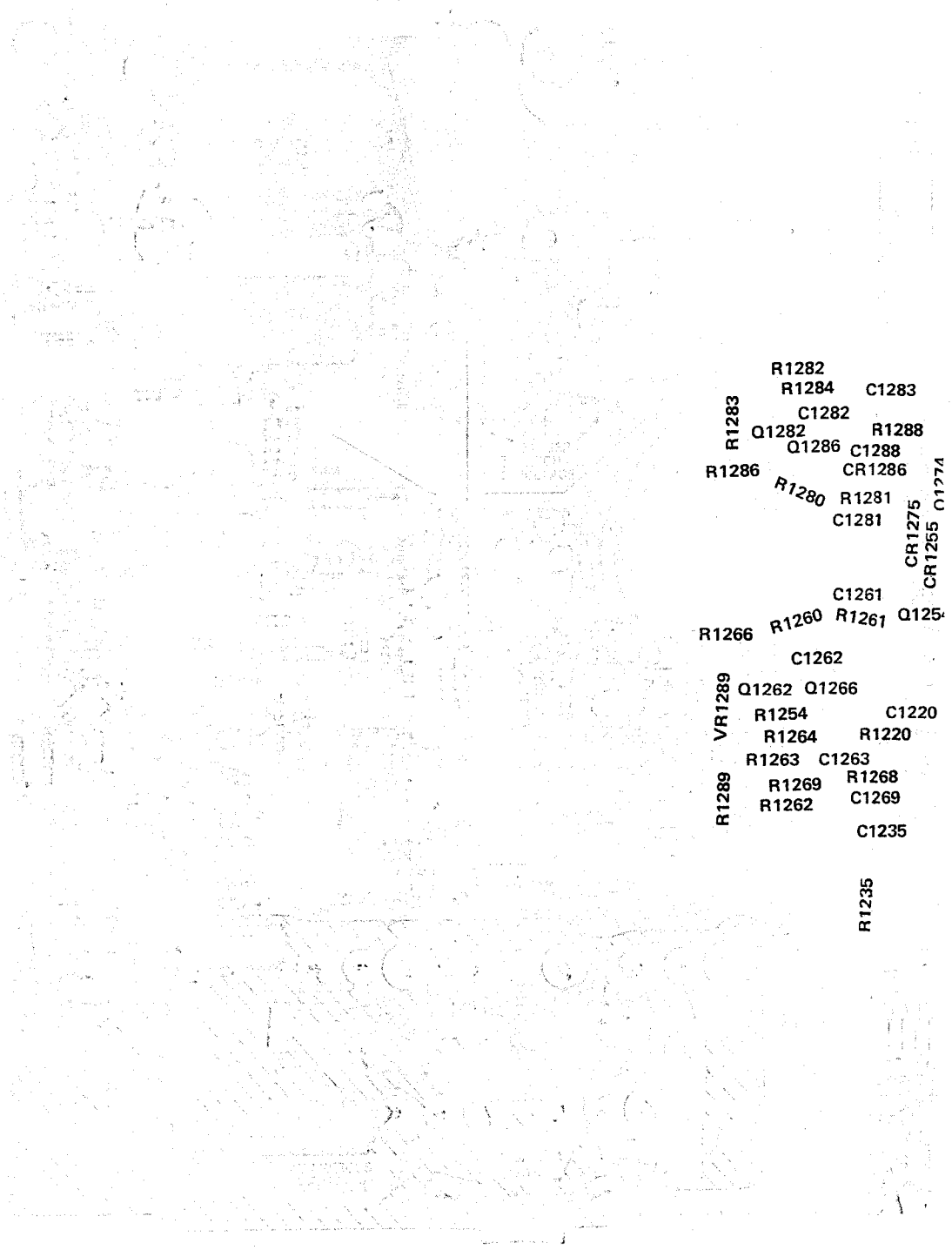

Ⓐ

Fig. 7-16A. P/O A9 Interface circuit board SN B

FIG. 7-16B

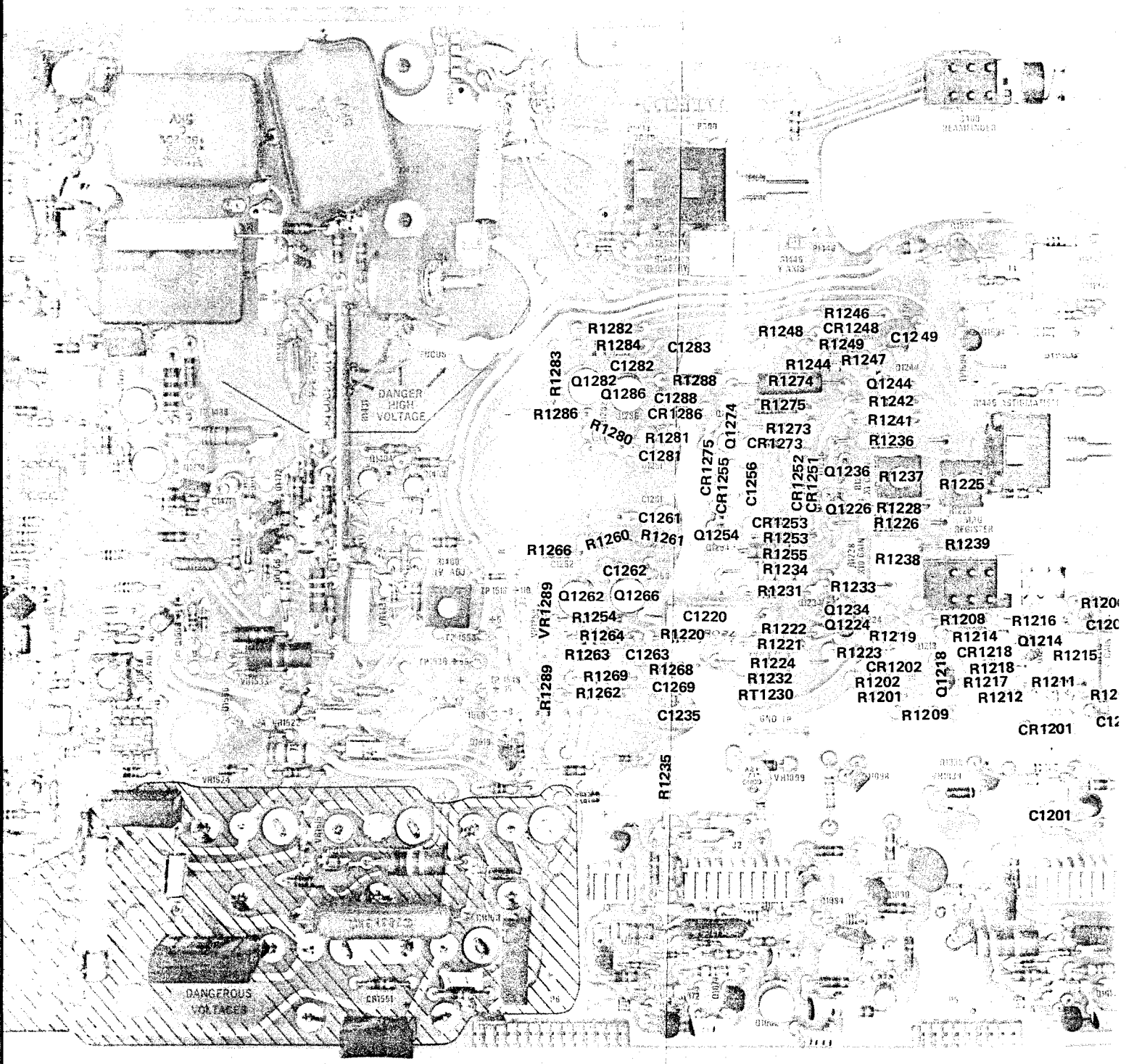

Fig. 7-16A. P/O A9 Interface circuit board SN B080000-up.

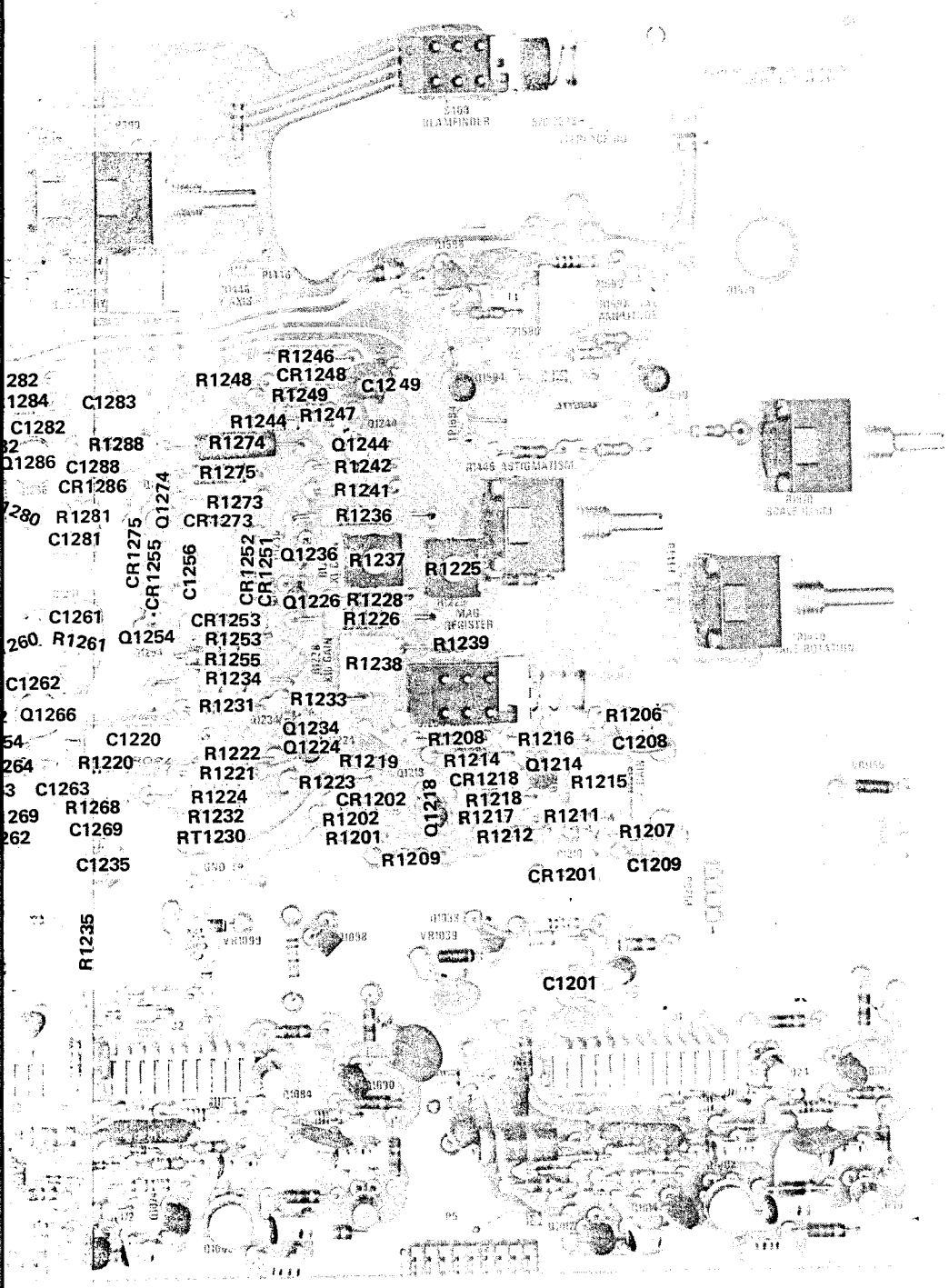

e circuit board SN B080000-up.

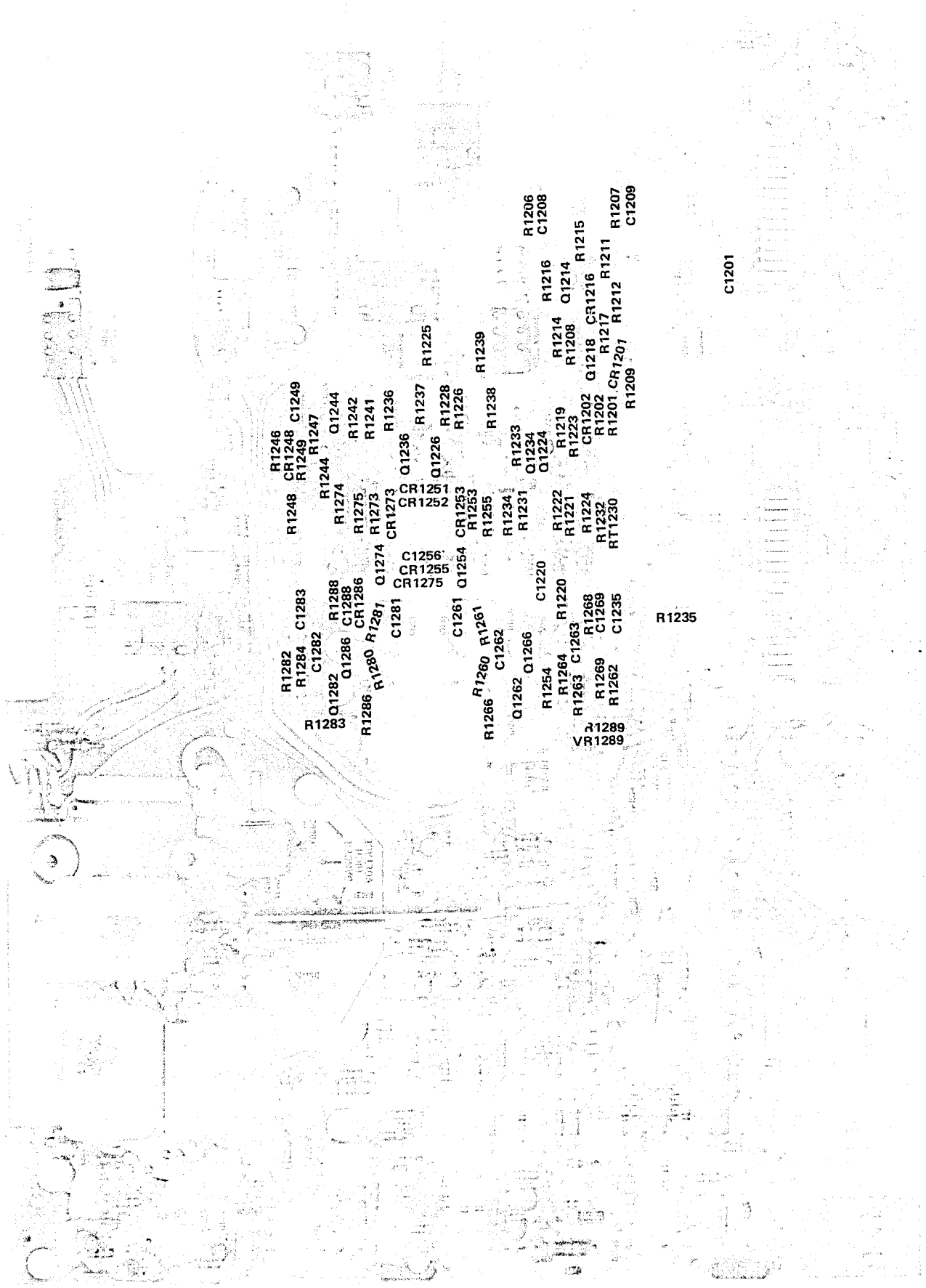

Fig. 7-16B. P/O A9 Interface circuit board below SN B080000.

FIG. 7-17B

Located on back of board

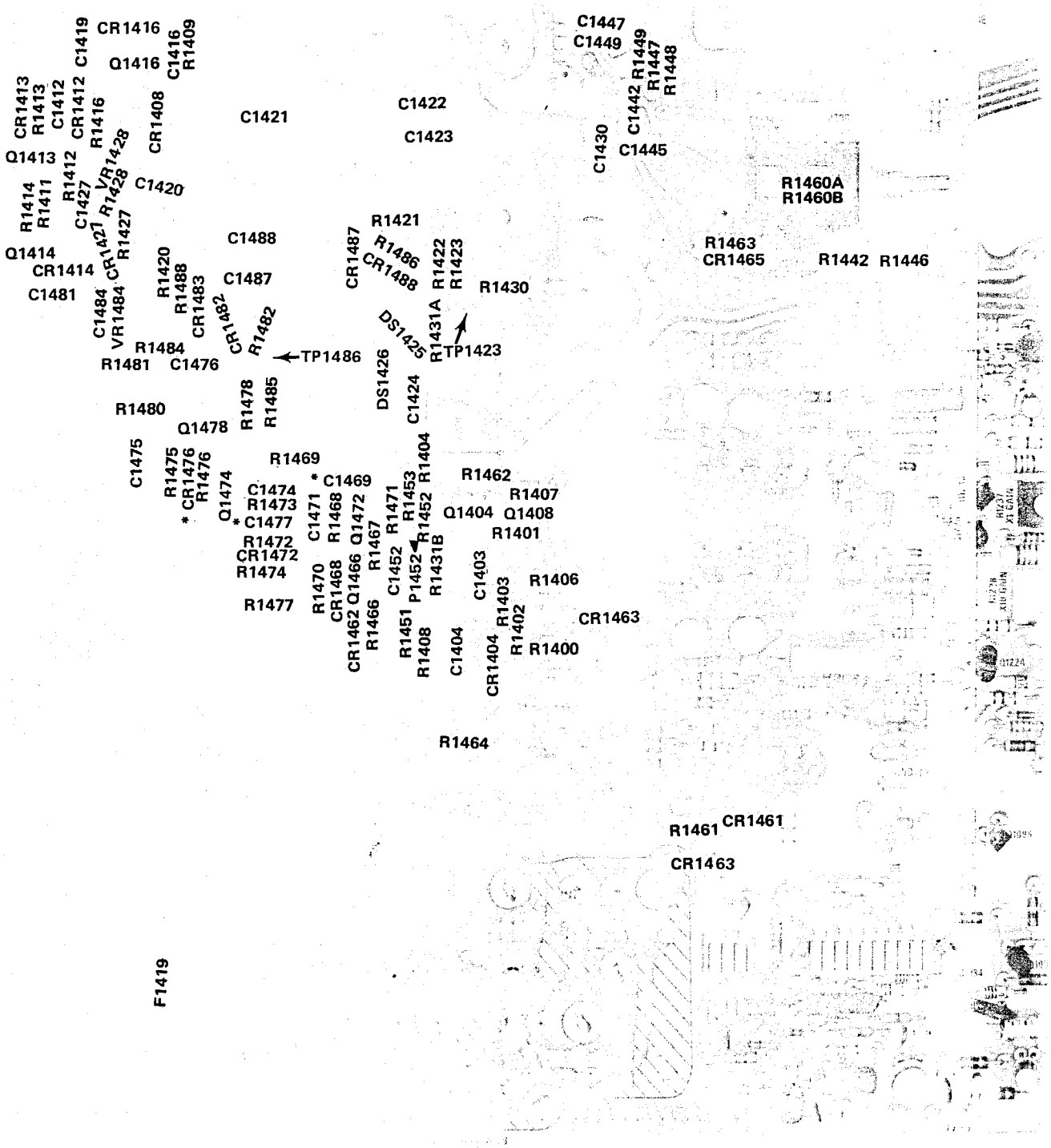

REV. JAN 1974

Fig. 7-17A. P/O A9 Interface circuit board SN B080000-up.

FIG. 7-17B

Located on back of board. L1419 T1420 CR1421 U1432

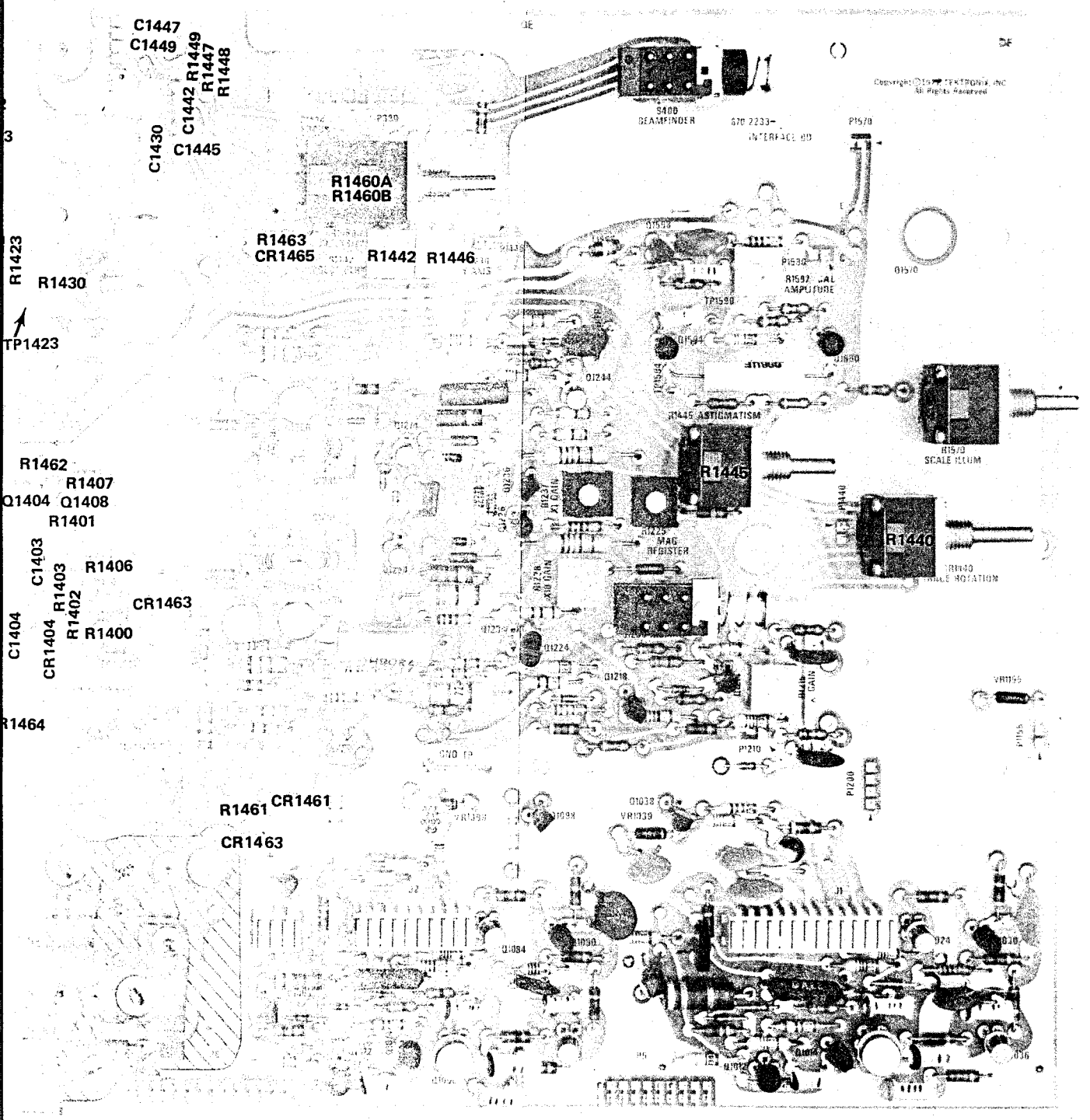

*See Parts List for serial number ranges.

Fig. 7-17A. P/O A9 Interface circuit board SN B080000-up.

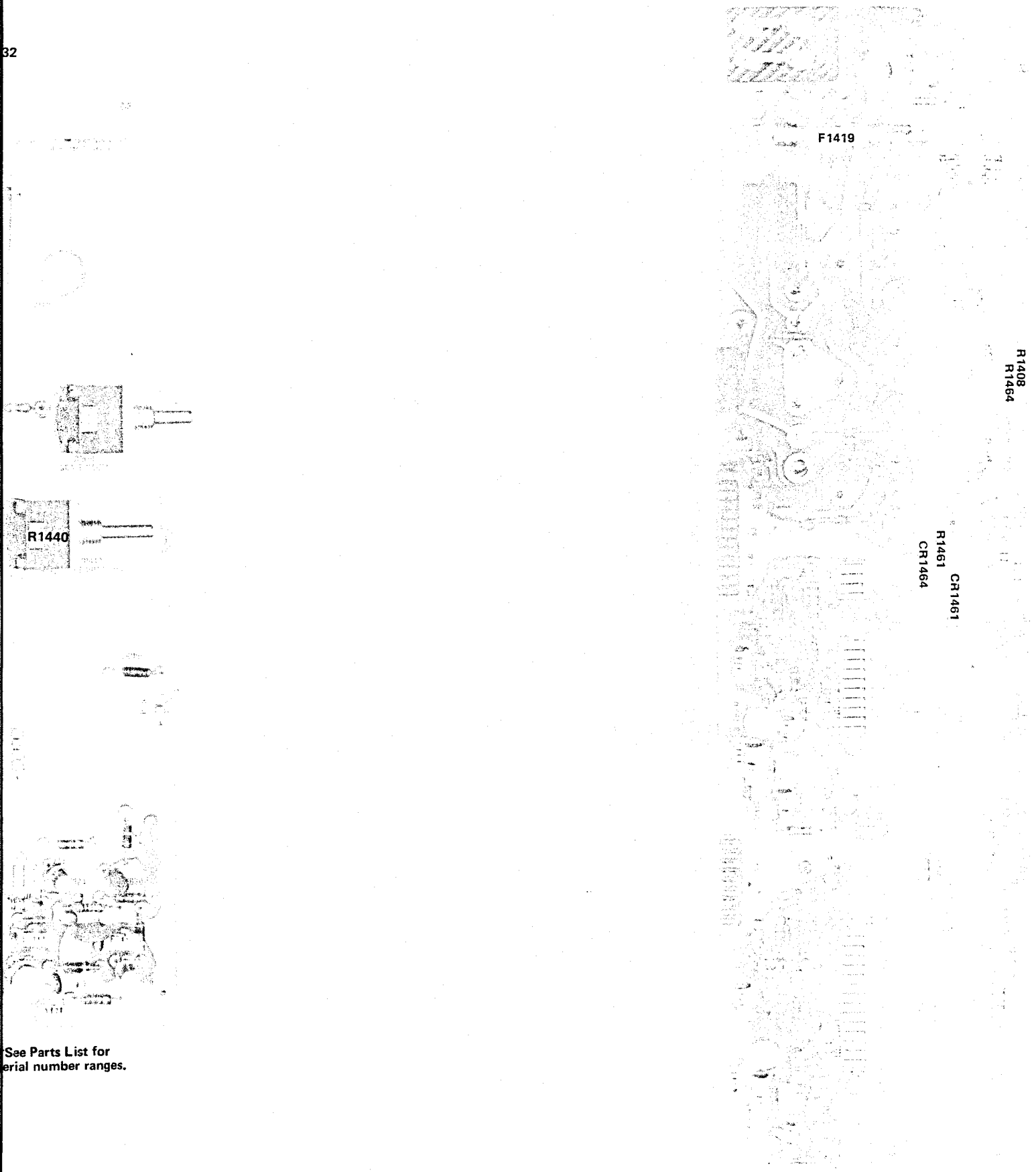

See Parts List for
erial number ranges.

Fig. 7-17B. P

THE QUALITY OF
THIS PAGE IS
THE BEST THAT
IS AVAILABLE

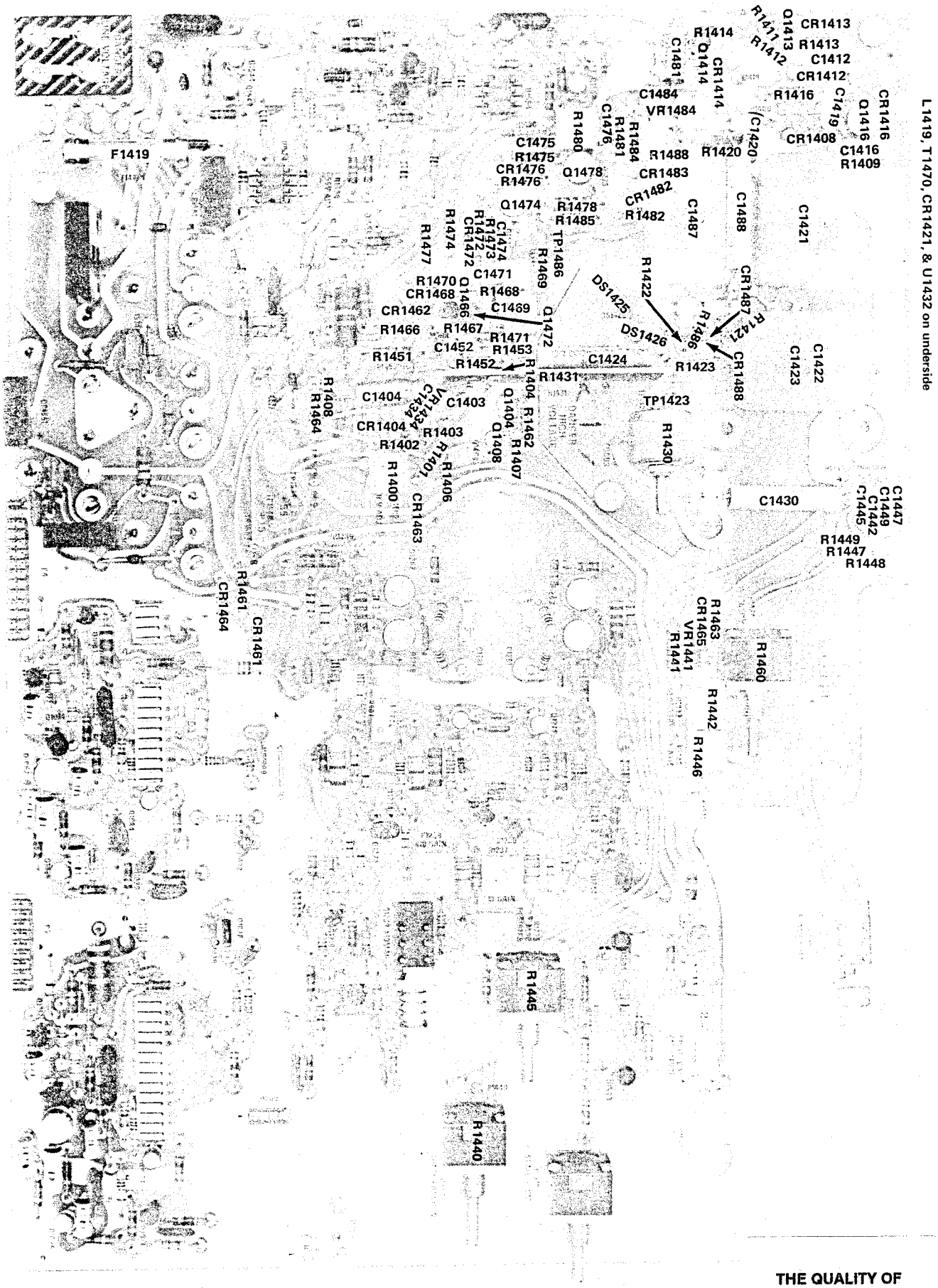

Fig. 7-17B. P/O A9 Interface circuit board below SN B080000.

THE QUALITY OF THIS PAGE IS THE BEST THAT IS AVAILABLE

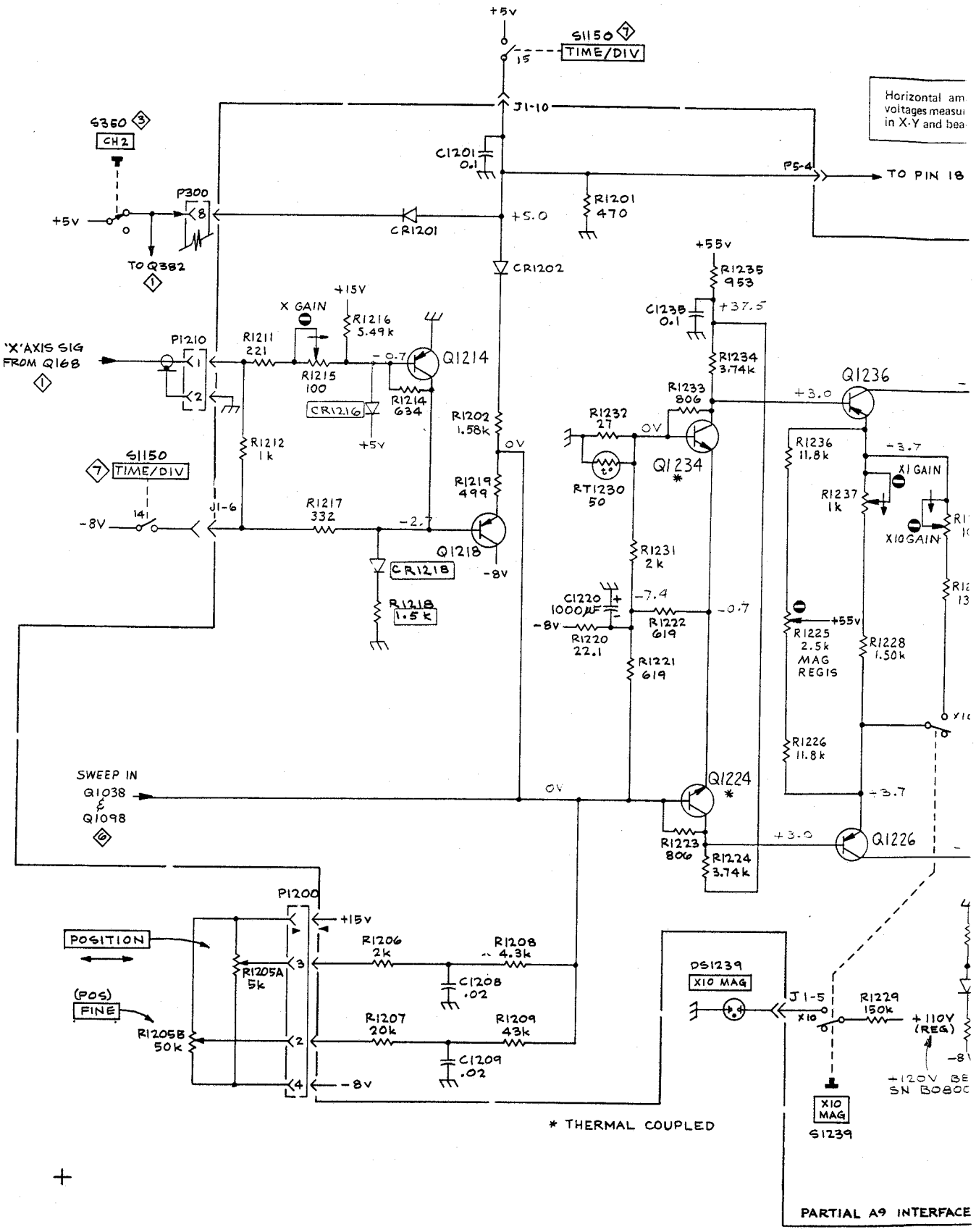

465 OSCILLOSCOPE

D

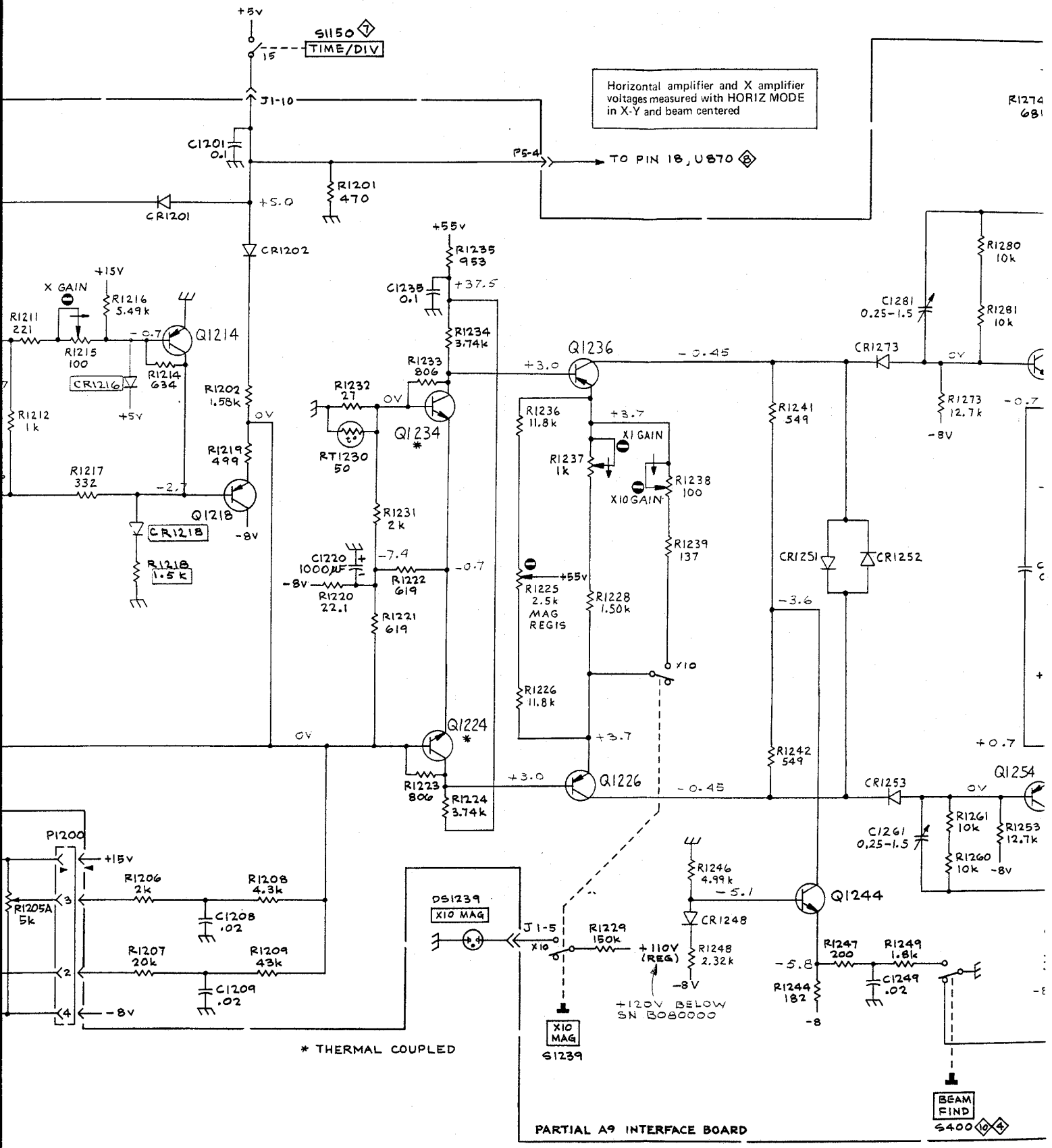
Horizontal amplifier and X amplifier voltages measured with HORIZ MODE in X-Y and beam centered
S1150
TIME/DIV
J1-10
P5-4
TO PIN 18, U870
C1201 0.1
R1201 470
CR1201
CR1202
+5.0
+5V
+15V
X GAIN
R1216 5.49k
R1211 221
R1215 100
Q1214
R1214 634
CR1216
R1212 1k
R1202 1.58k
R1219 499
R1217 332
Q1218
CR1218
R1218 1.5k
-8V
+55V
R1235 953
C1235 0.1
R1234 3.74k
R1233 806
R1232 27
RT1230 50
Q1234
R1231 2k
C1220 1000µF
R1222 619
R1220 22.1
R1221 619
Q1224
R1223 806
R1224 3.74k
Q1236
R1236 11.8k
R1237 1k
X1 GAIN
X10 GAIN
R1238 100
R1239 137
R1225 2.5k MAG REGIS
R1228 1.50k
R1226 11.8k
X10
Q1226
R1241 549
R1242 549
CR1251
CR1252
CR1273
C1281 0.25-1.5
R1280 10k
R1281 10k
R1273 12.7k
CR1253
C1261 0.25-1.5
R1261 10k
R1260 10k
R1253 12.7k
Q1254
R1246 4.99k
CR1248
R1248 2.32k
Q1244
R1244 182
R1247 200
R1249 1.8k
C1249 .02
+110V (REG)
+120V BELOW SN B080000
P1200
R1205A 5k
R1206 2k
R1208 4.3k
C1208 .02
R1207 20k
R1209 43k
C1209 .02
DS1239
X10 MAG
J1-5
R1229 150k
X10 MAG
S1239
BEAM FIND
S400
* THERMAL COUPLED
PARTIAL A9 INTERFACE BOARD

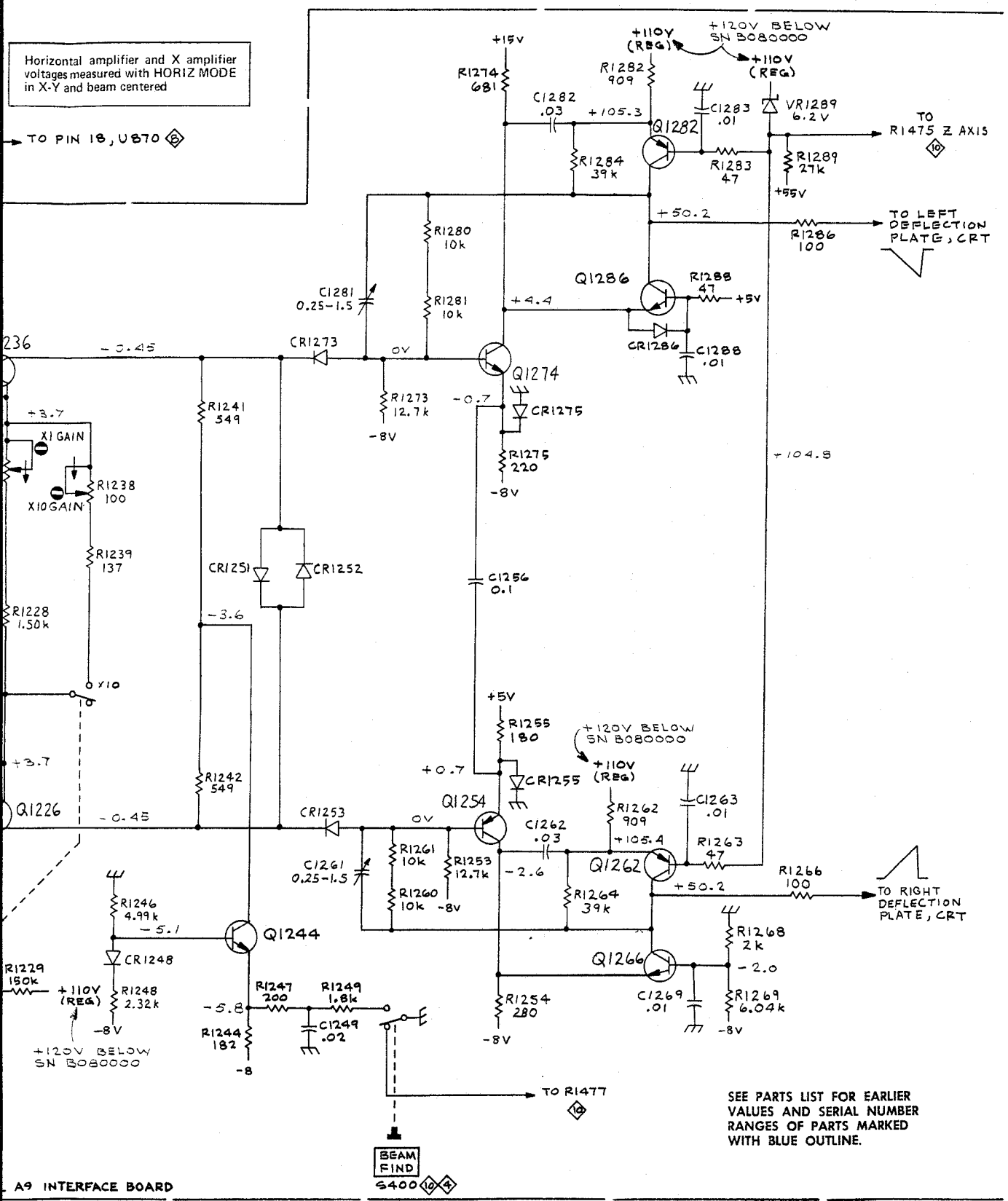

SEE PARTS LIST FOR EARLIER VALUES AND SERIAL NUMBER RANGES OF PARTS MARKED WITH BLUE OUTLINE.

A9 INTERFACE BOARD

B

HORIZONTAL AMPLIFIER 9 973

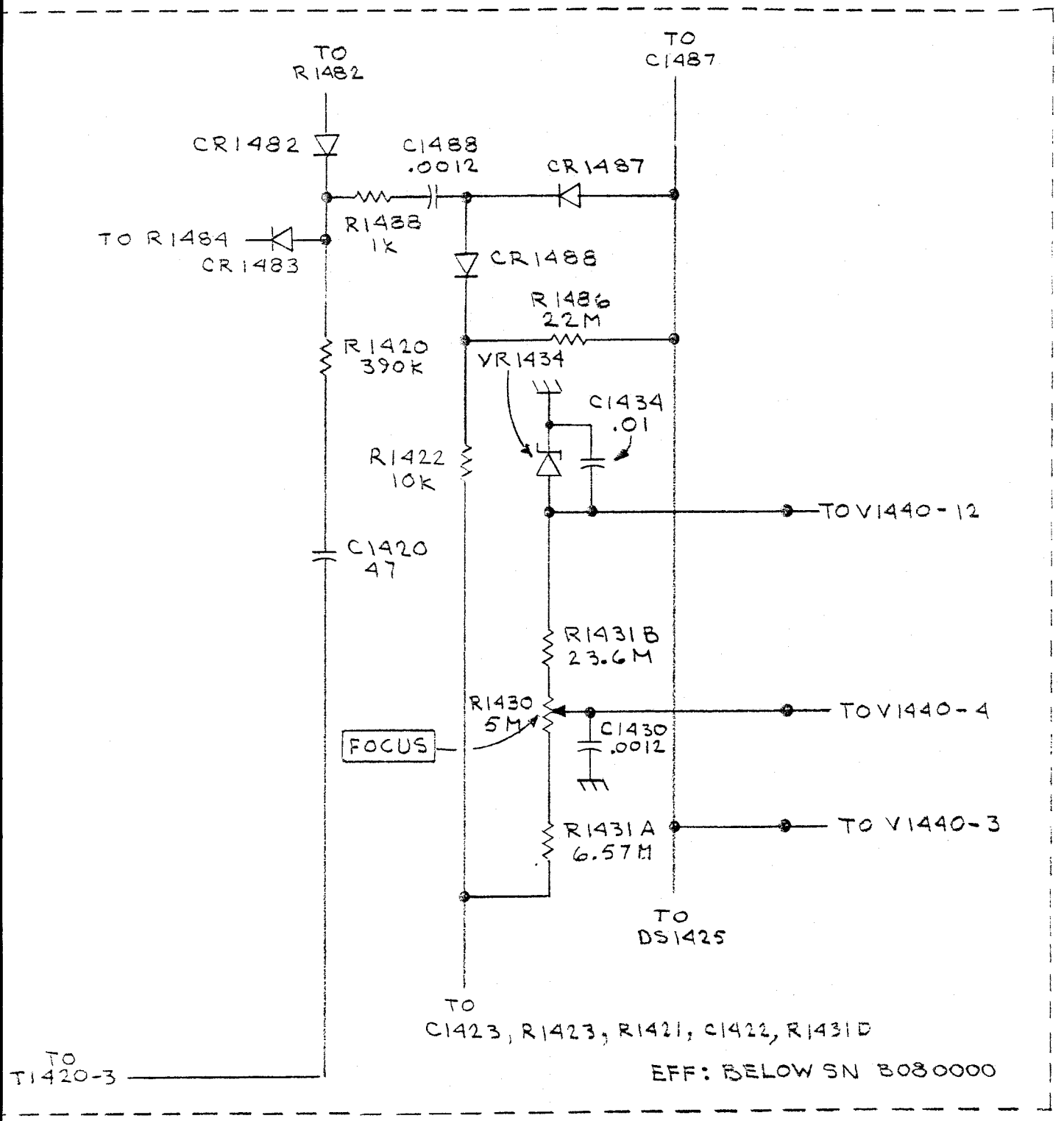

For Service Manuals
MAURITRON SERVICES
8 Cherry Tree Road, Chinnor
Oxfordshire, OX9 4QY.
Tel (01844) 351694
Fax (01844) 352554
email:- mauritron@dial.pipex.com

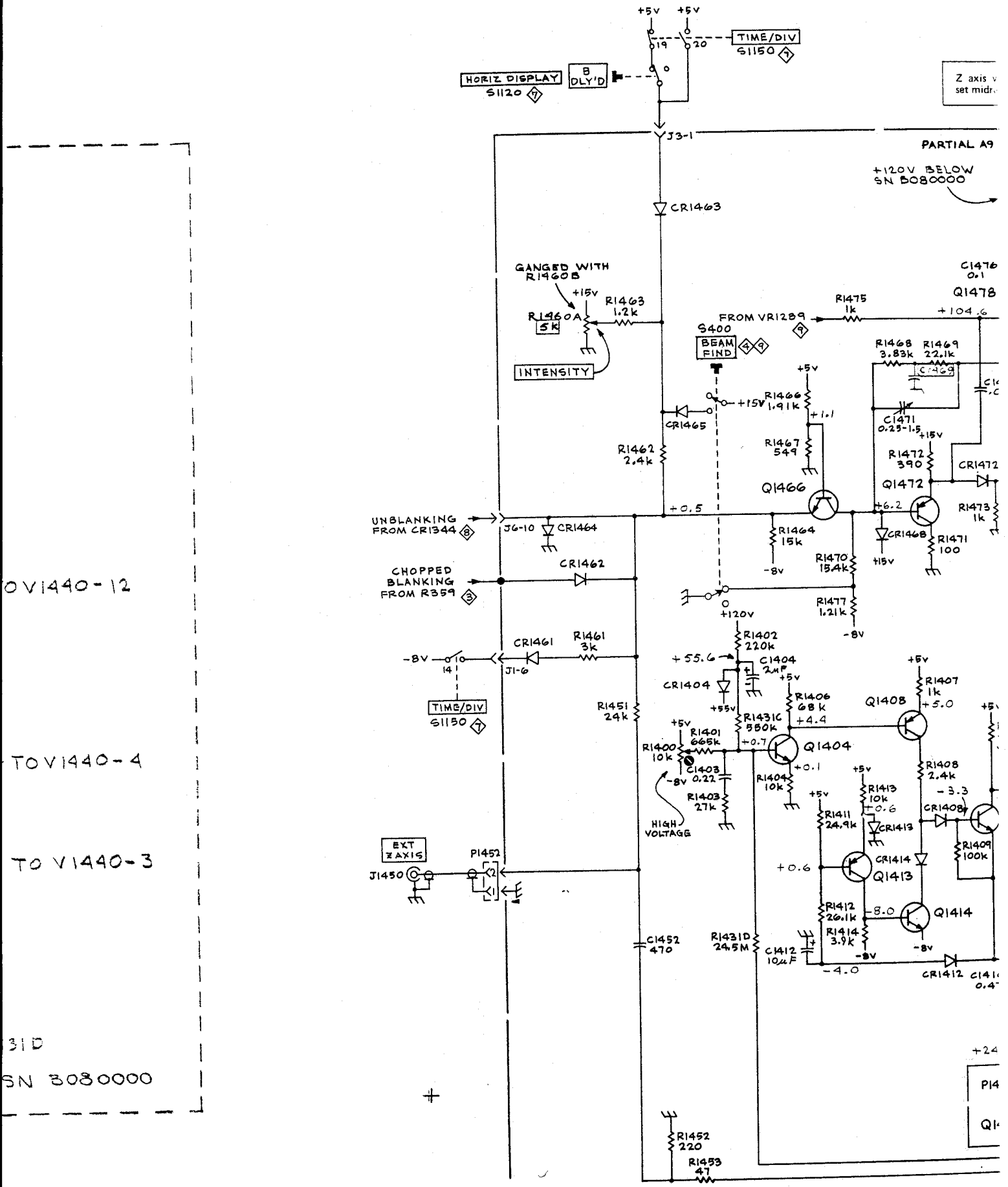

465 OSCILLOSCOPE

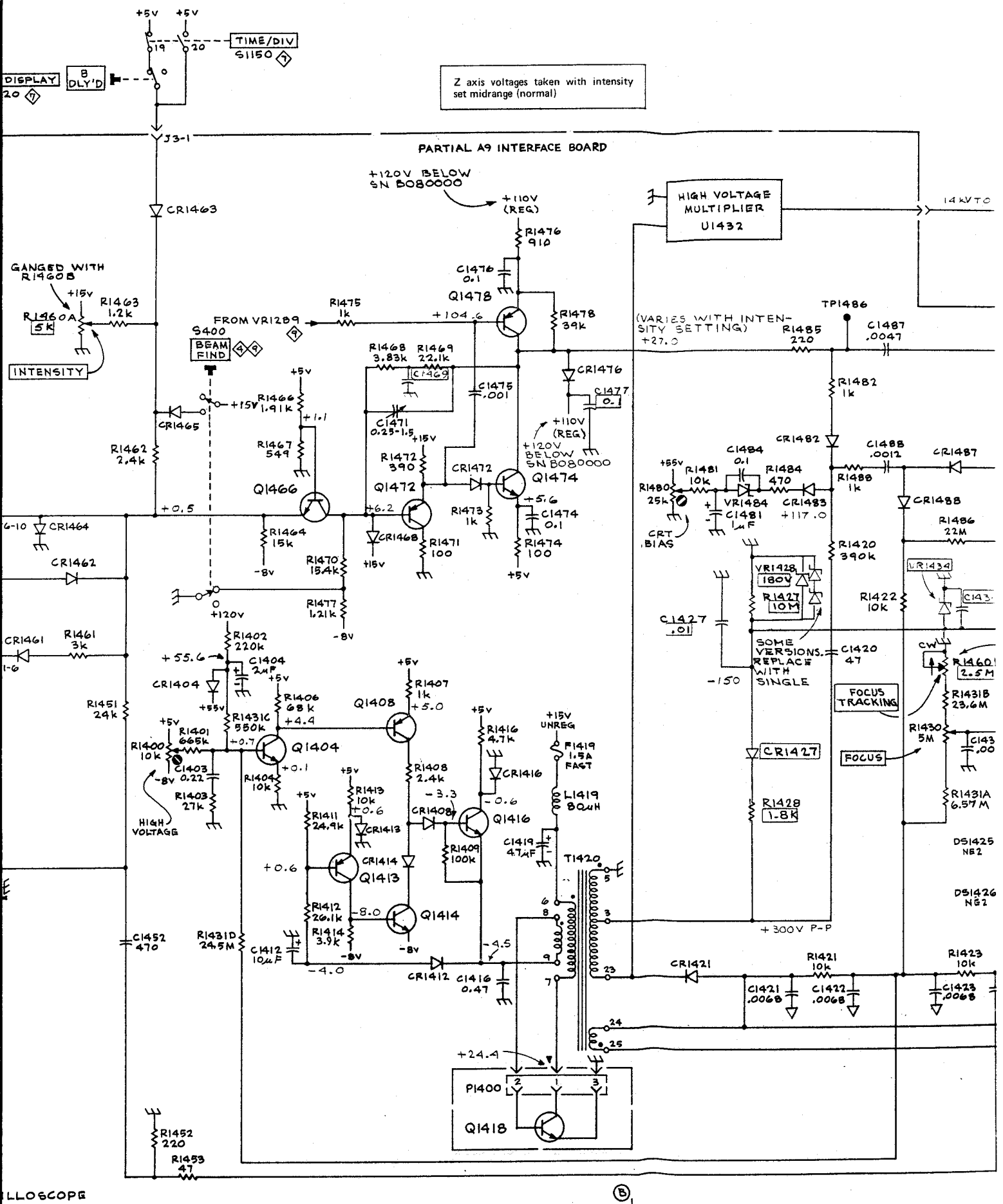
Z axis voltages taken with intensity set midrange (normal)
PARTIAL A9 INTERFACE BOARD
TIME/DIV S1150
DISPLAY 20
B DLY'D
J3-1
+120V BELOW SN B080000
+110V (REG)
HIGH VOLTAGE MULTIPLIER U1432
14 KV TO
GANGED WITH R1460B
R1460A 5K
INTENSITY
R1463 1.2k
FROM VR1289
S400 BEAM FIND
R1475 1k
Q1478
R1476 910
C1476 0.1
R1478 39k
(VARIES WITH INTENSITY SETTING) +27.0
R1485 220
TP1486
C1487 .0047
R1468 3.83k
R1469 22.1k
CR1469
C1475 .001
CR1476
C1477 0.1
C1471 0.25-1.5
R1466 1.91k
R1467 549
CR1465
R1462 2.4k
Q1466
R1472 390
Q1472
CR1472
Q1474
R1473 1k
C1474 0.1
R1474 100
R1471 100
CR1468
R1464 15k
R1470 15.4k
R1477 1.21k
R1482 1k
CR1482
C1488 .0012
CR1487
R1481 10k
C1484 0.1
R1484 470
R1480 25k
CRT BIAS
VR1484
CR1483
C1481 1µF
R1488 1k
CR1488
R1486 22M
R1420 390k
VR1428 180V
R1427 10M
VR1434
R1422 10k
C1427 .01
SOME VERSIONS REPLACE WITH SINGLE
C1420 47
CW
R1460 2.5M
FOCUS TRACKING
R1431B 23.6M
R1430 5M
FOCUS
CR1427
R1428 1.8K
R1431A 6.57M
CR1464
CR1462
CR1461
R1461 3k
R1451 24k
R1402 220k
C1404 2µF
CR1404
R1406 68k
R1431C 550k
R1400 10k
R1401 665k
C1403 0.22
R1403 27k
R1404 10k
HIGH VOLTAGE
Q1404
Q1408
R1407 1k
R1408 2.4k
R1416 4.7k
CR1416
Q1416
R1409 100k
CR1408
R1413 10k
CR1413
R1411 24.9k
CR1414
Q1413
Q1414
R1412 26.1k
R1414 3.9k
C1412 10µF
CR1412
C1416 0.47
R1419 1.5A FAST
L1419 80µH
C1419 47µF
T1420
+300V P-P
CR1421
R1421 10k
C1421 .0068
C1422 .0068
R1423 10k
C1423 .0068
DS1425 NB2
DS1426 NB2
C1452 470
R1431D 24.5M
P1400
Q1418
R1452 220
R1453 47
ILLOSCOPE
B1

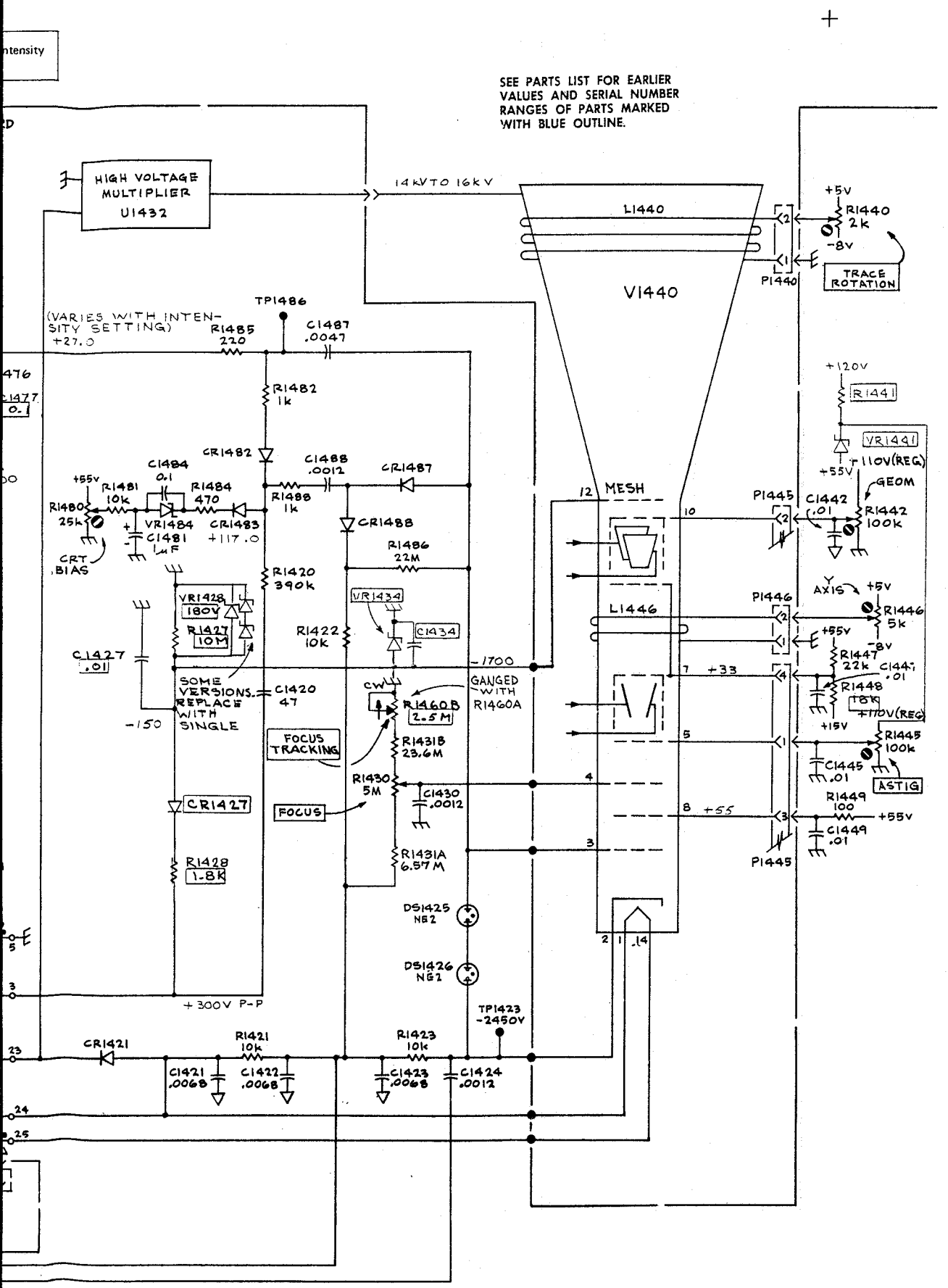

CRT CIRCUIT 10 REV APR 1974

FIG. 7-18B

Ⓐ

Fig. 7-18A. P/O A9 Interface circuit board SN B080000-

THE QUALITY OF
THIS PAGE IS
THE BEST THAT
IS AVAILABLE

FIG. 7-18B

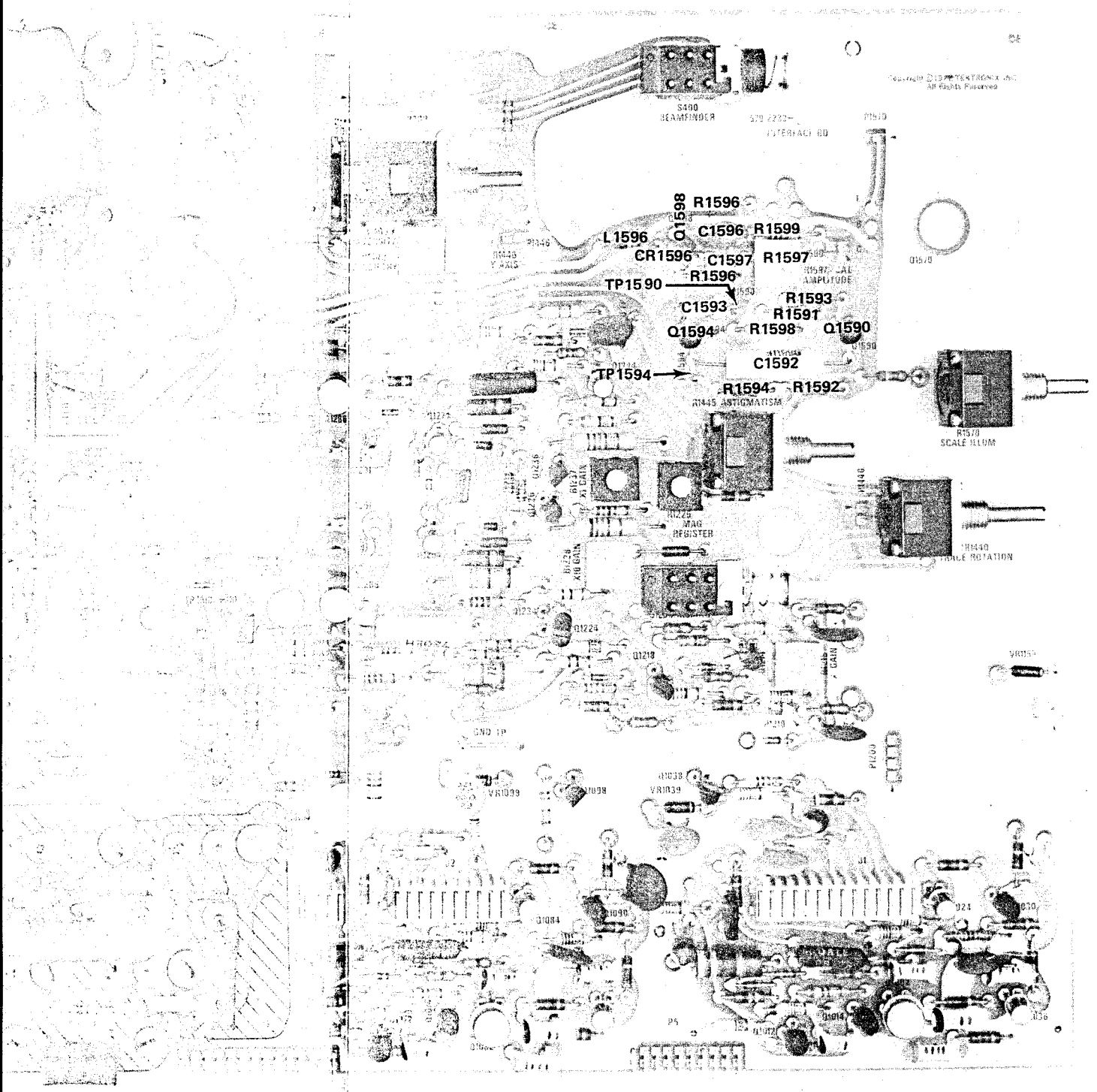

Fig. 7-18A. P/O A9 Interface circuit board SN B080000-up.

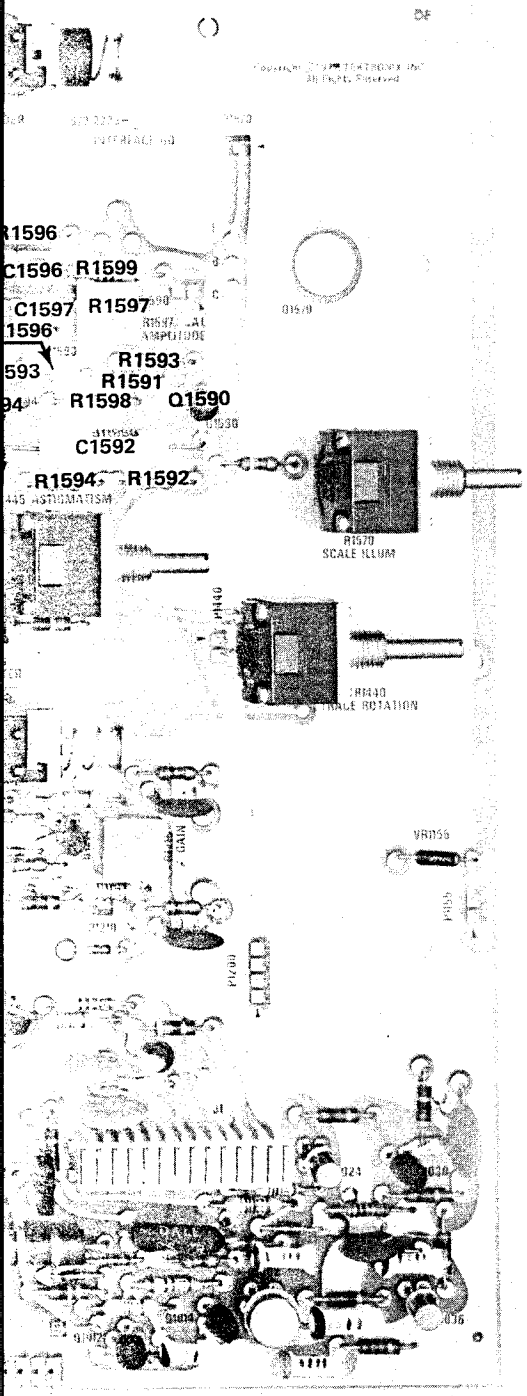

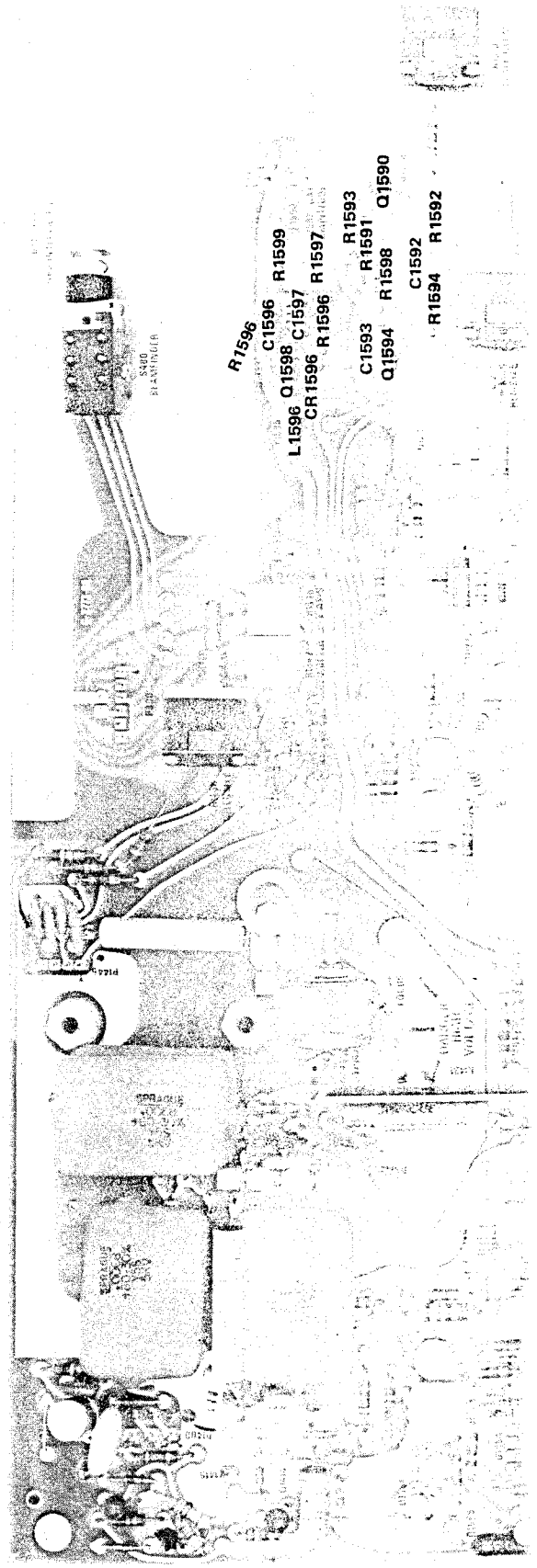

REV. APR 1974

Fig. 7-18B. P/O A9 Int

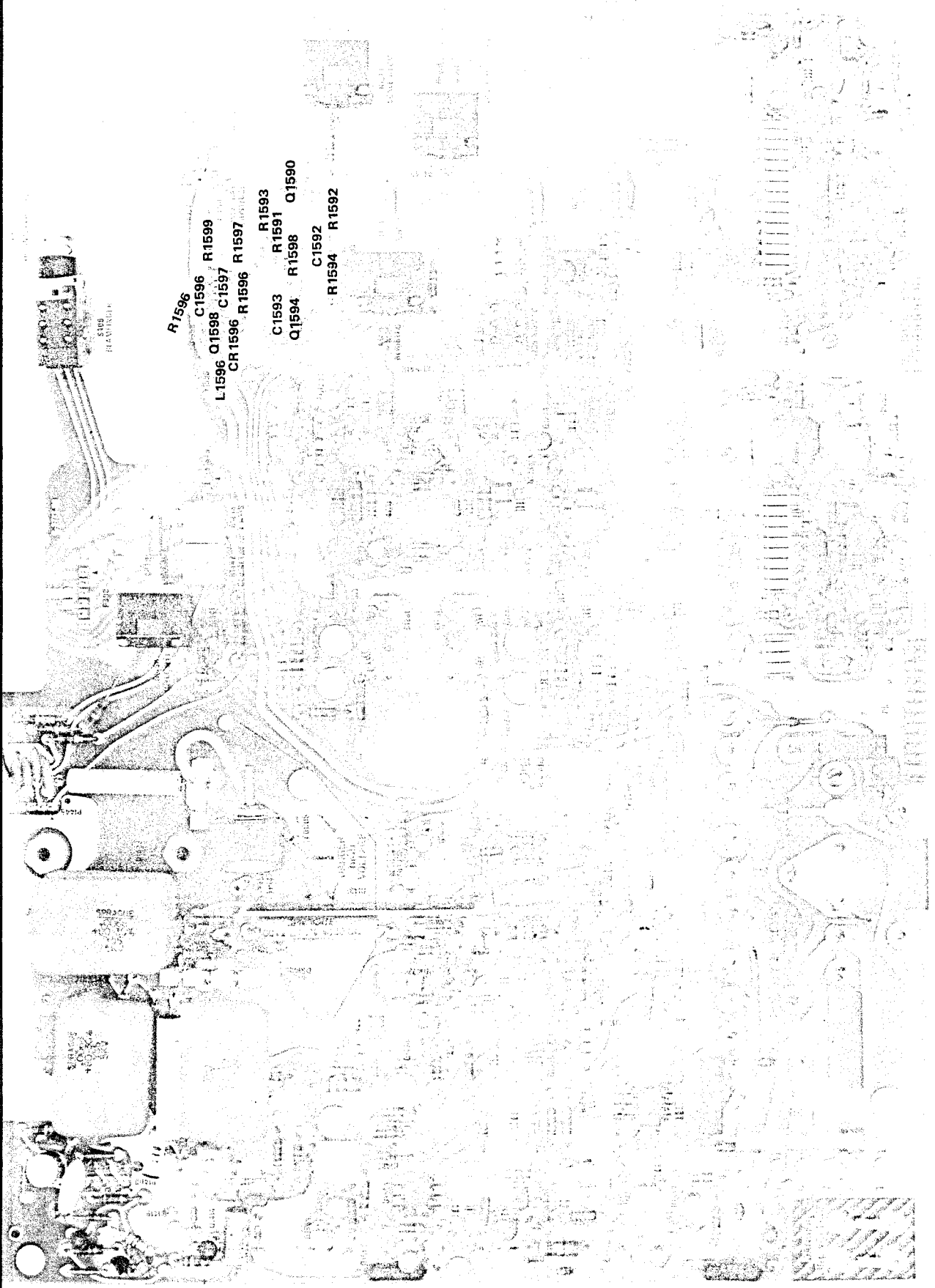

Fig. 7-18B. P/O A9 Interface circuit board below SN B080000.

THE QUALITY OF THIS PAGE IS THE BEST THAT IS AVAILABLE

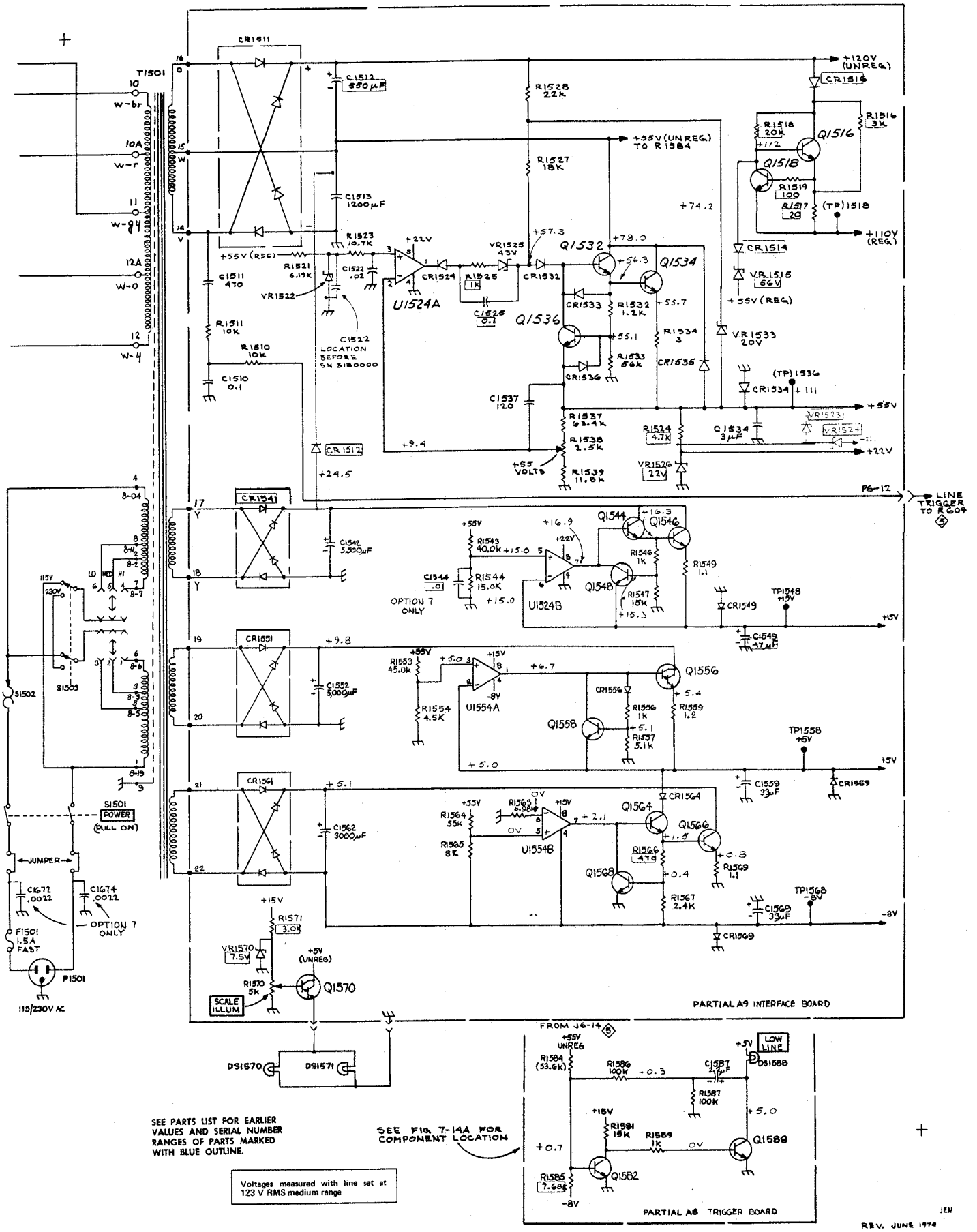

SEE PARTS LIST FOR EARLIER VALUES AND SERIAL NUMBER RANGES OF PARTS MARKED WITH BLUE OUTLINE.

SEE FIG. 7-14A FOR COMPONENT LOCATION

Voltages measured with line set at 123 V RMS medium range

JEN

REV. JUNE 1974

POWER SUPPLY 12

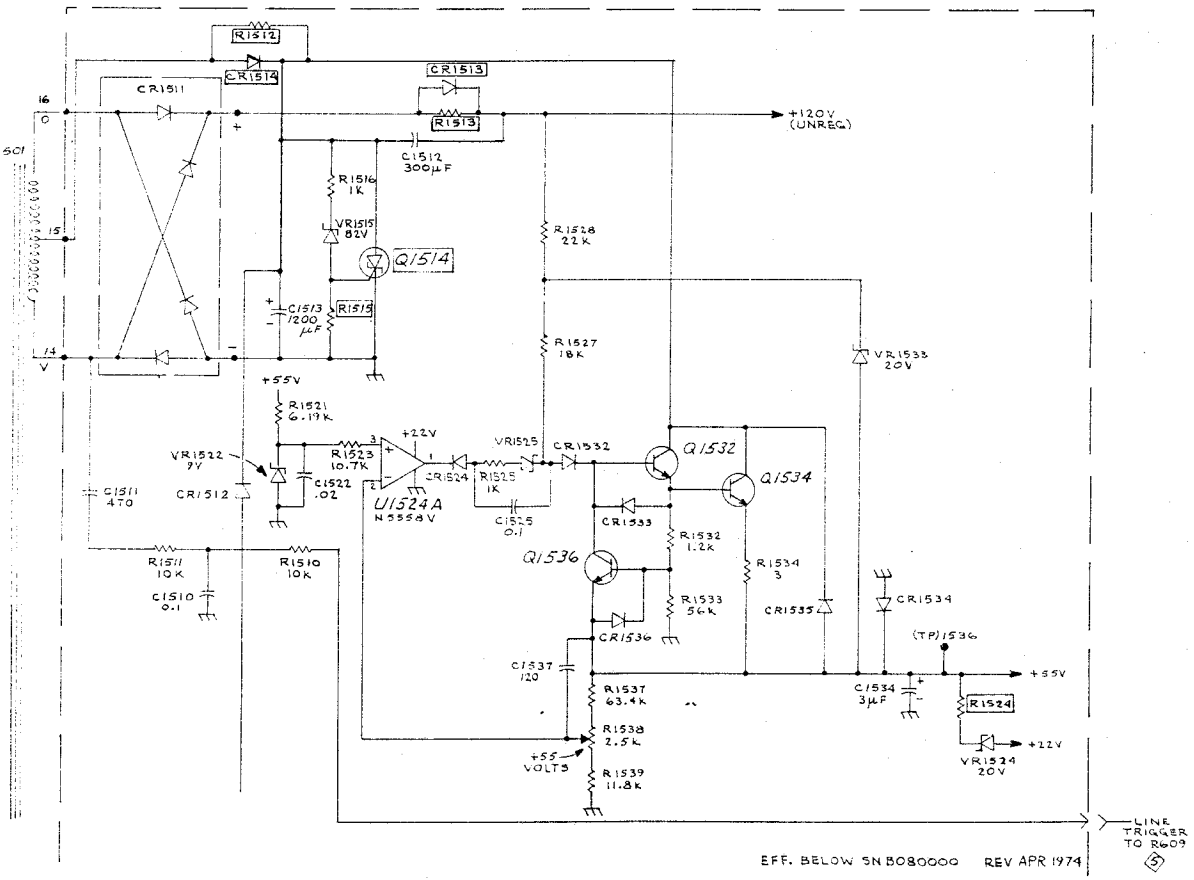
R1512
CR1514
CR1513
CR1511
16
0
R1513
+120V
(UNREG)
T1501
C1512
300µF
R1516
1K
VR1515
82V
Q1514
15
R1528
22K
C1513
1200
µF
R1515
14
V
R1527
18K
VR1533
20V
+55V
R1521
6.19K
+22V
VR1522
9V
R1523
10.7K
VR1525
CR1532
Q1532
Q1534
C1511
470
CR1512
C1522
.02
CR1524
R1525
1K
U1524A
N5558V
C1525
0.1
CR1533
R1532
1.2K
Q1536
R1534
3
R1511
10K
R1510
10K
C1510
0.1
R1533
56K
CR1535
CR1534
CR1536
(TP)1536
C1537
120
+55V
R1537
63.4K
C1534
3µF
R1524
R1538
2.5K
+22V
+55
VOLTS
VR1524
20V
R1539
11.8K
LINE
TRIGGER
TO R609
EFF. BELOW SN B080000 REV APR 1974
3

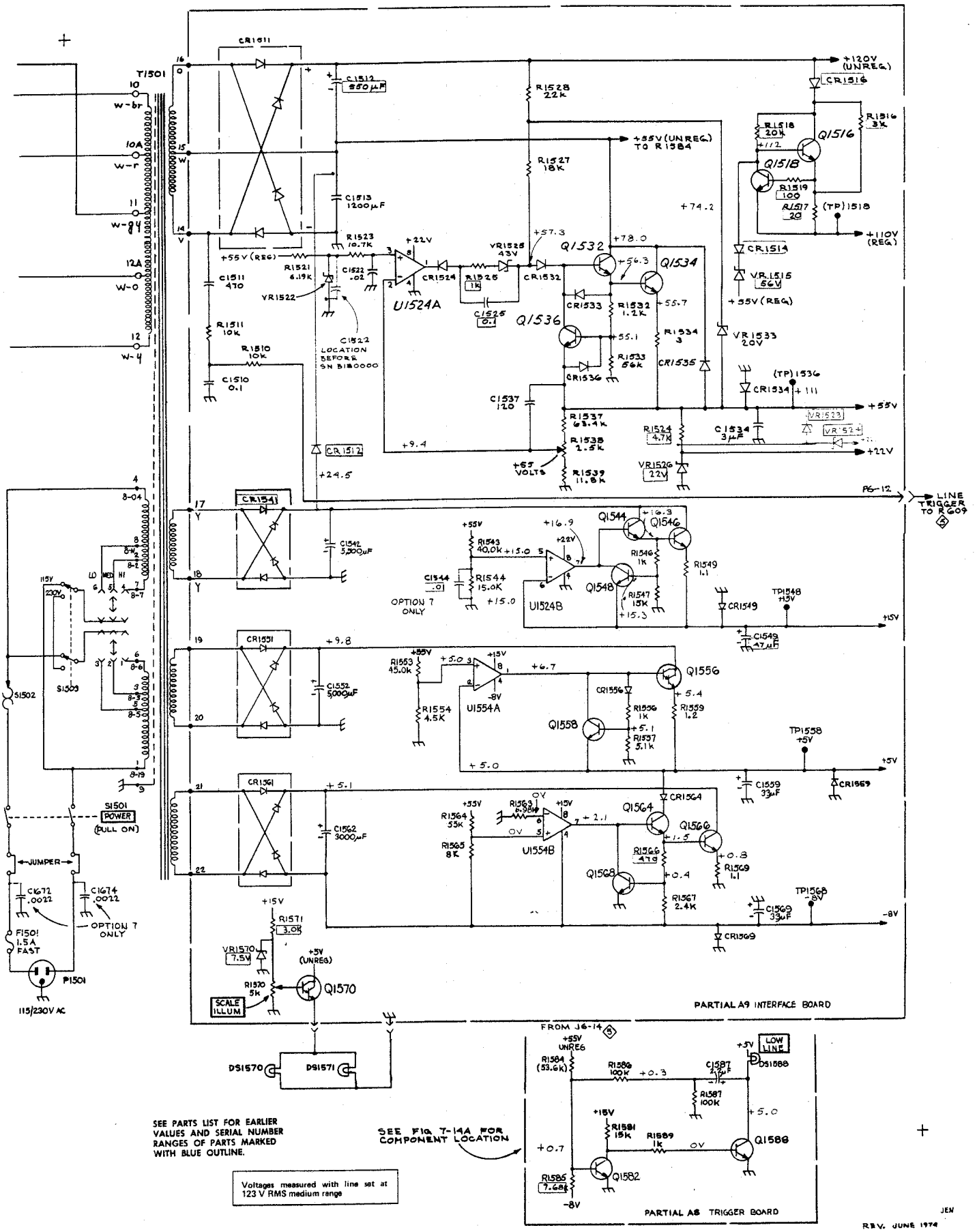

SEE PARTS LIST FOR EARLIER VALUES AND SERIAL NUMBER RANGES OF PARTS MARKED WITH BLUE OUTLINE.

SEE FIG 7-14A FOR COMPONENT LOCATION

Voltages measured with line set at 123 V RMS medium range

JEN

REV. JUNE 1974

POWER SUPPLY 12

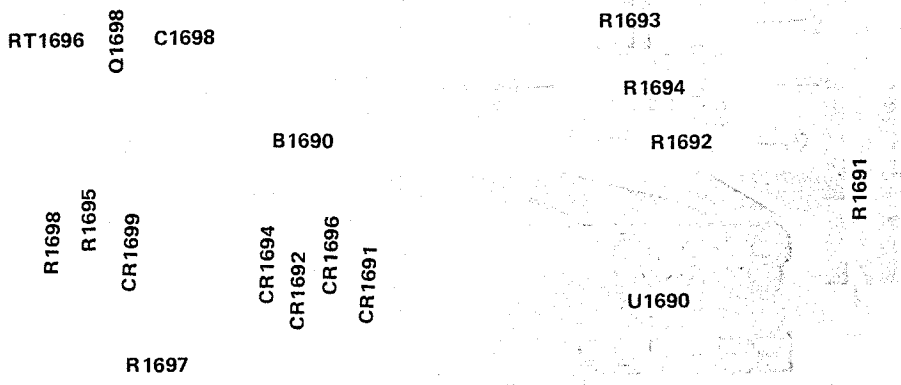

Ⓐ Fig. 7-19. A6 Fan Motor circuit board.

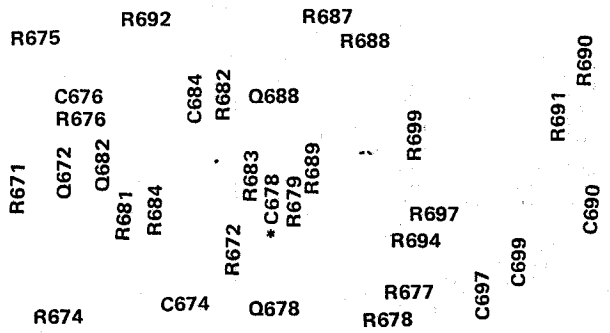

Ⓑ Fig. 7-20. All. Trigger View Amplifier circuit board below SN B120000.
See Fig. 7-11A for SN B120000-up.

*See Parts List for serial number ranges.

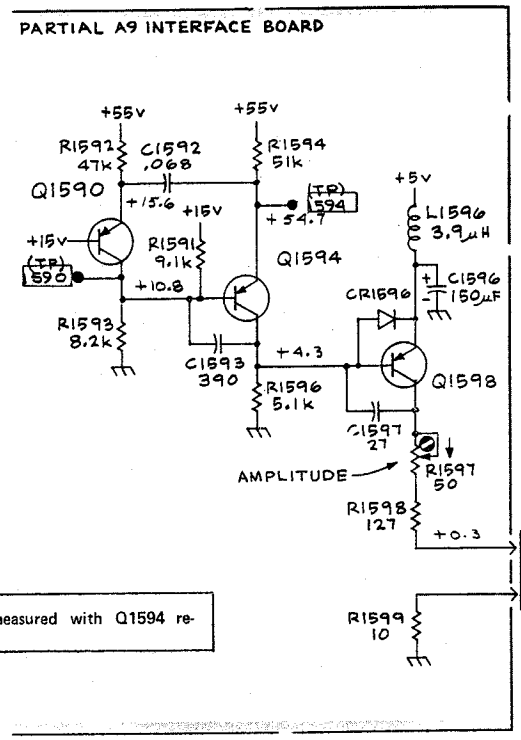

FIG. 7-19 & 7-20

Voltages measured with Q1594 removed

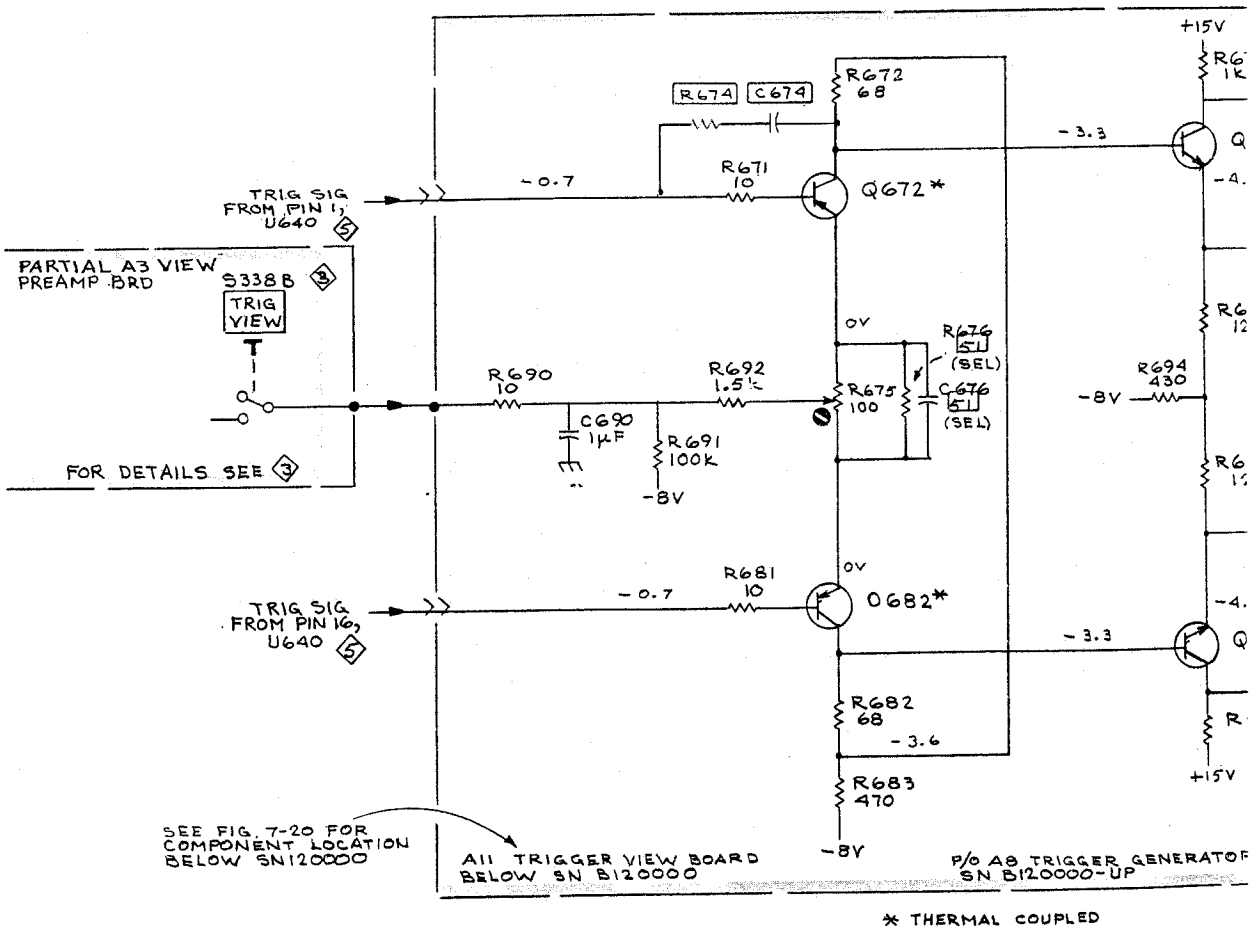

* THERMAL COUPLED

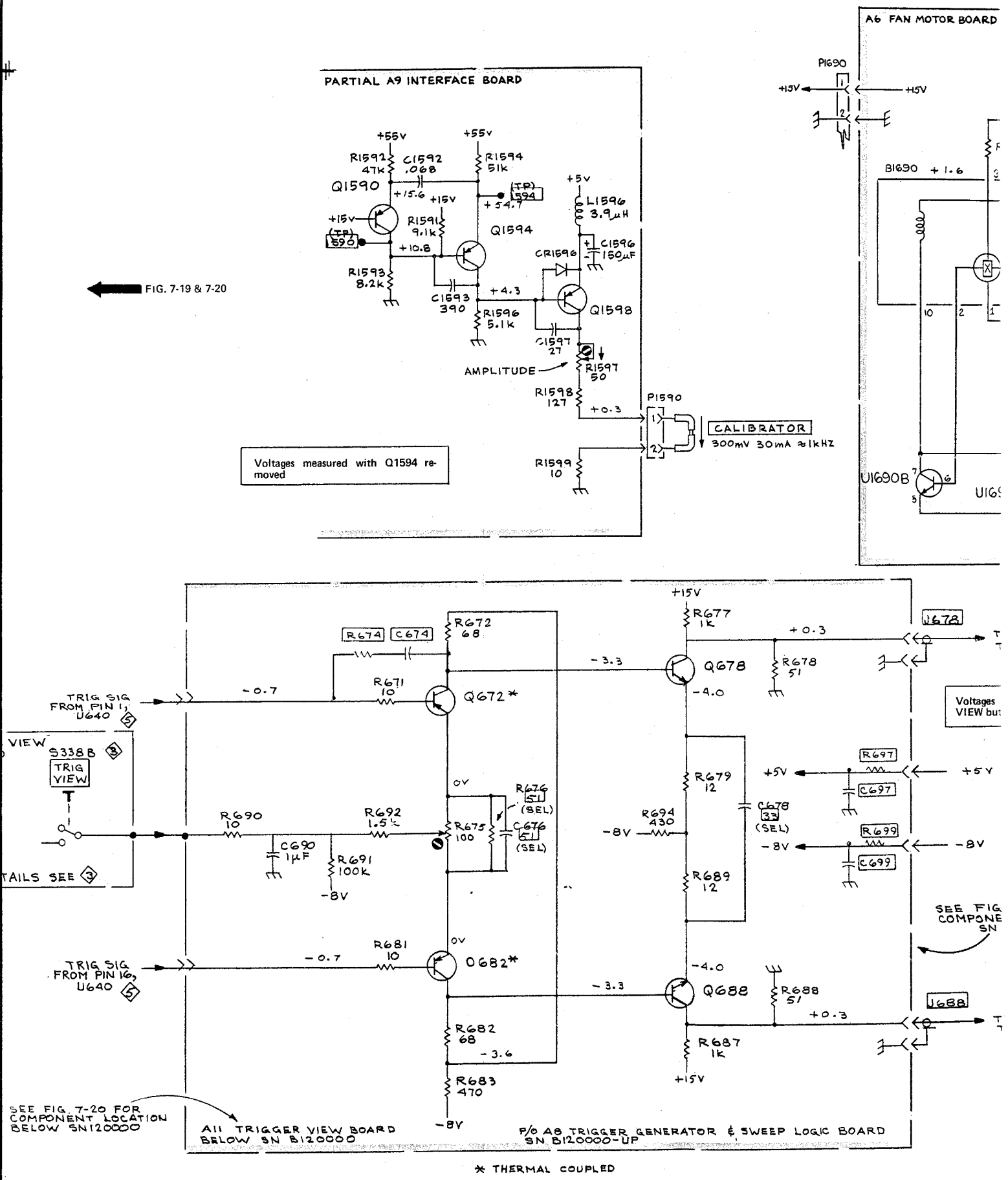
PARTIAL A9 INTERFACE BOARD
A6 FAN MOTOR BOARD
FIG. 7-19 & 7-20
+55V
R1592 47k
C1592 .068
R1594 51k
Q1590
+15.6
+15V
(TP) 594
+54.7
+5V
L1596 3.9µH
(TP) 590
R1591 9.1k
Q1594
C1596 150µF
+10.8
CR1596
R1593 8.2k
C1593 390
+4.3
R1596 5.1k
Q1598
C1597 27
AMPLITUDE
R1597 50
R1598 127
+0.3
P1590
CALIBRATOR
300mV 30mA ≈1kHZ
R1599 10
Voltages measured with Q1594 removed
P1690
B1690 + 1.6
U1690B
TRIG SIG FROM PIN 1, U640
VIEW
S338B
TRIG VIEW
TAILS SEE
R674
C674
R672 68
R671 10
Q672*
-0.7
-3.3
Q678
-4.0
R678 51
J678
R690 10
R692 1.5k
C690 1µF
R691 100k
-8V
R675 100
R676 51 (SEL)
C676 51 (SEL)
0V
R677 1k
R679 12
R694 430
C678 33 (SEL)
R689 12
R697
C697
R699
C699
+5V
SEE FIG COMPONE SN
TRIG SIG FROM PIN 16, U640
R681 10
Q682*
Q688
R688 51
J688
R682 68
-3.6
R683 470
R687 1k
SEE FIG. 7-20 FOR COMPONENT LOCATION BELOW SN120000
All TRIGGER VIEW BOARD BELOW SN B120000
P/O A8 TRIGGER GENERATOR & SWEEP LOGIC BOARD SN B120000-UP
* THERMAL COUPLED

©1

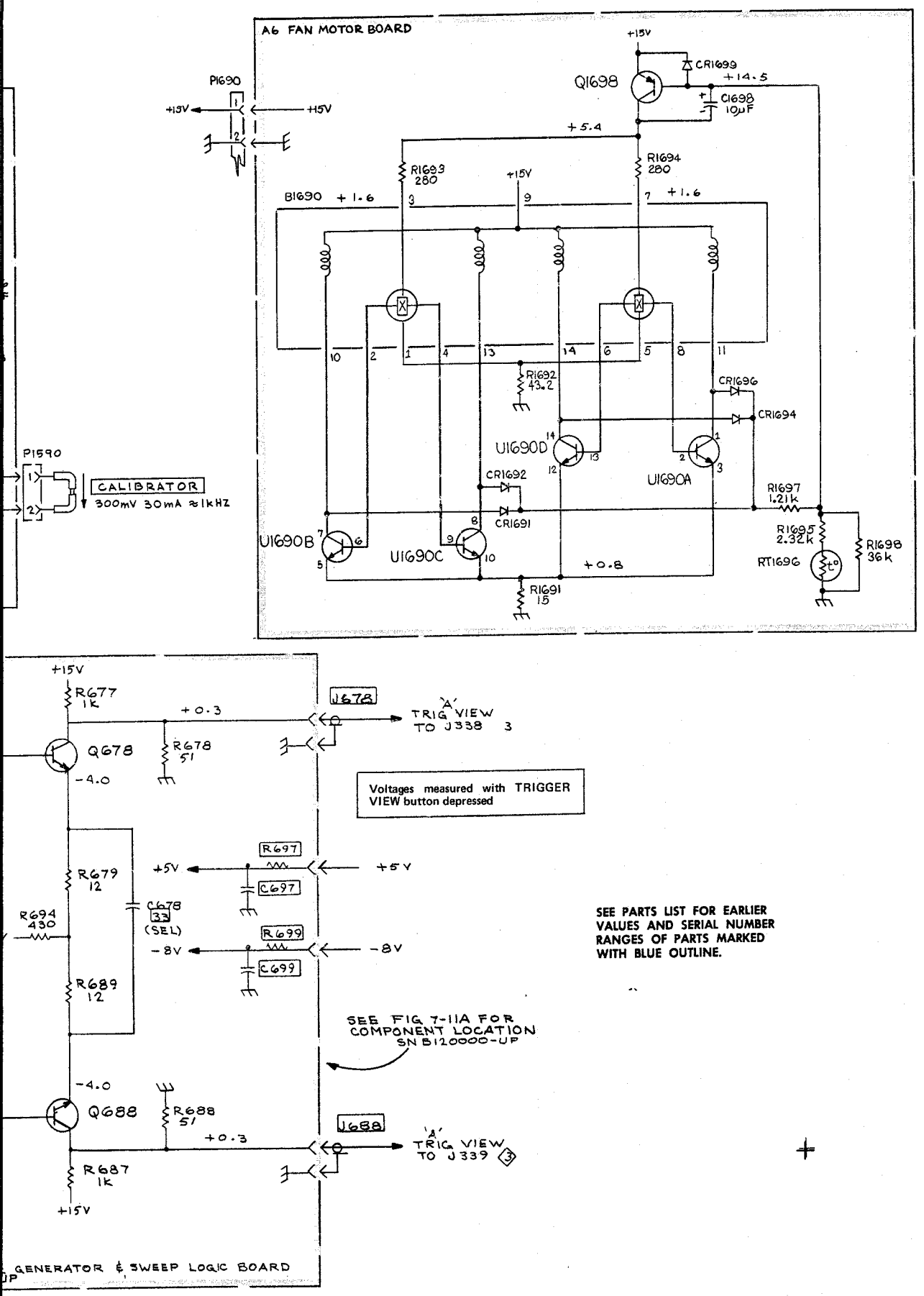

SEE PARTS LIST FOR EARLIER VALUES AND SERIAL NUMBER RANGES OF PARTS MARKED WITH BLUE OUTLINE.

'A' TRIGGER VIEW & CALIBRATOR 11 REV APR 1974

FIG. 7-21B

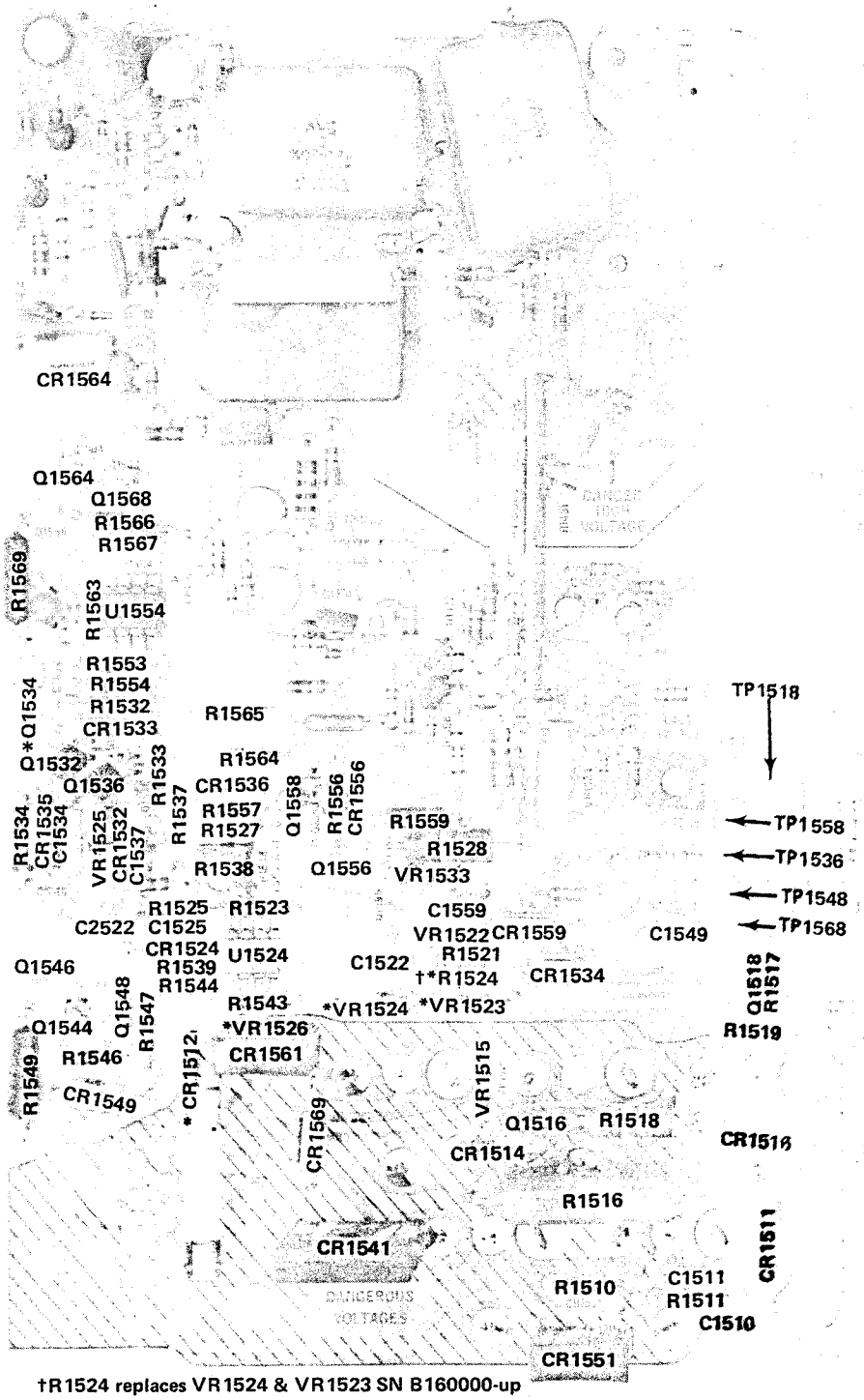

†R1524 replaces VR1524 & VR1523 SN B160000-up

Fig. 7-21A. P/O A9 Interface circuit board SN B

21B

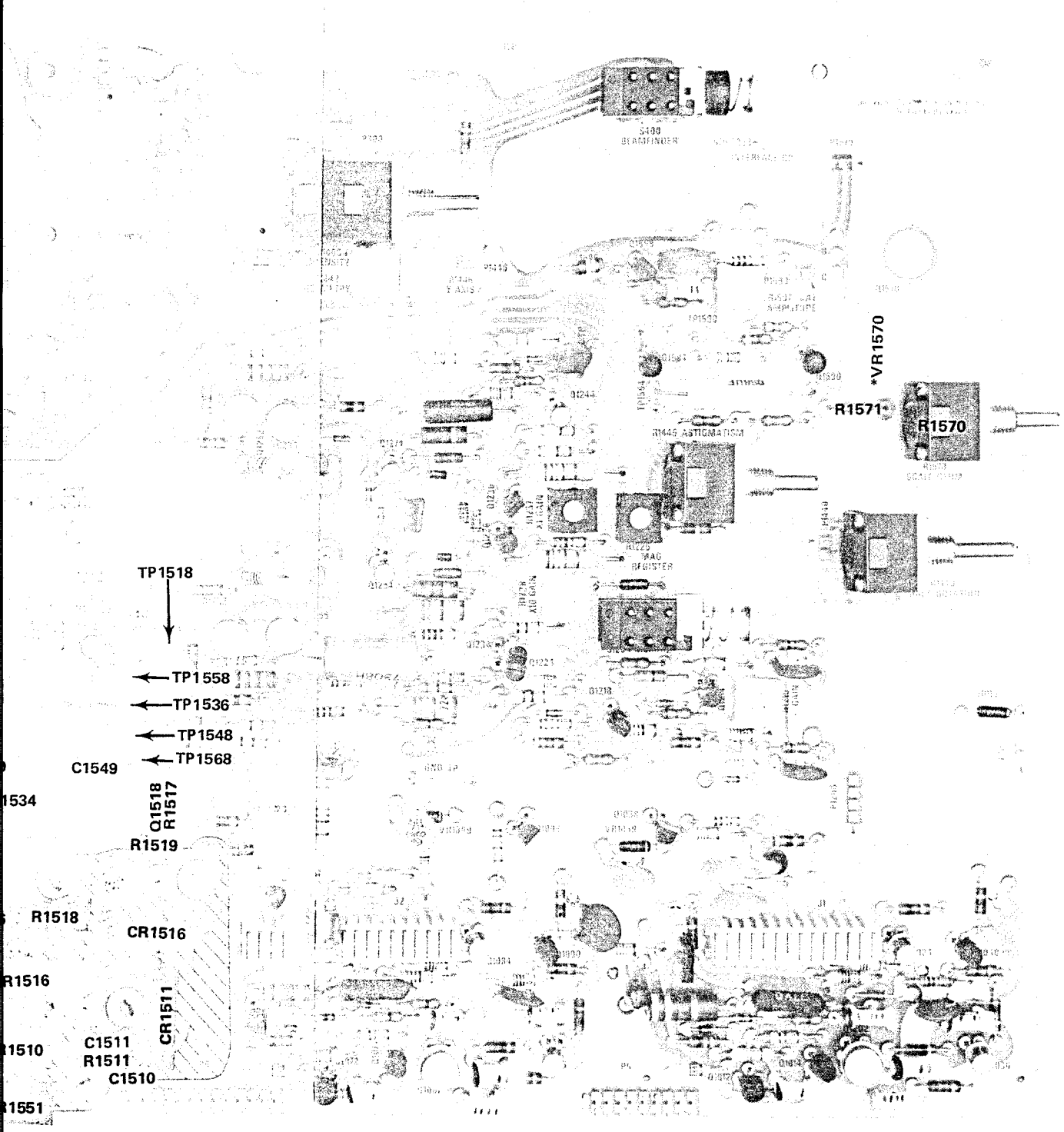

*See Parts List for serial number ranges.

Fig. 7-21A. P/O A9 Interface circuit board SN B080000-up.

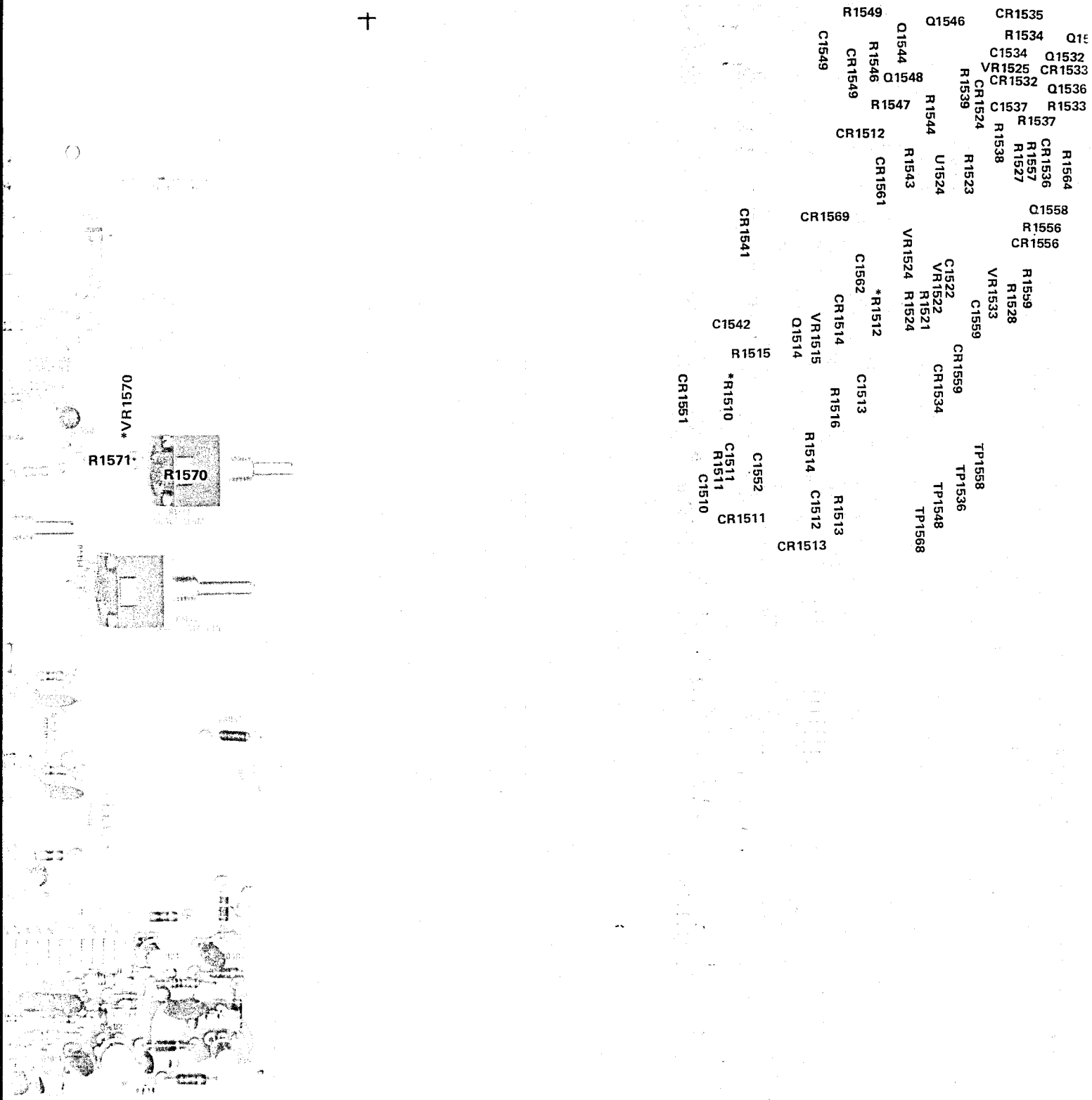

*See Parts List for serial number ranges.

Fig. 7-21B. P/O A9 Interface cir

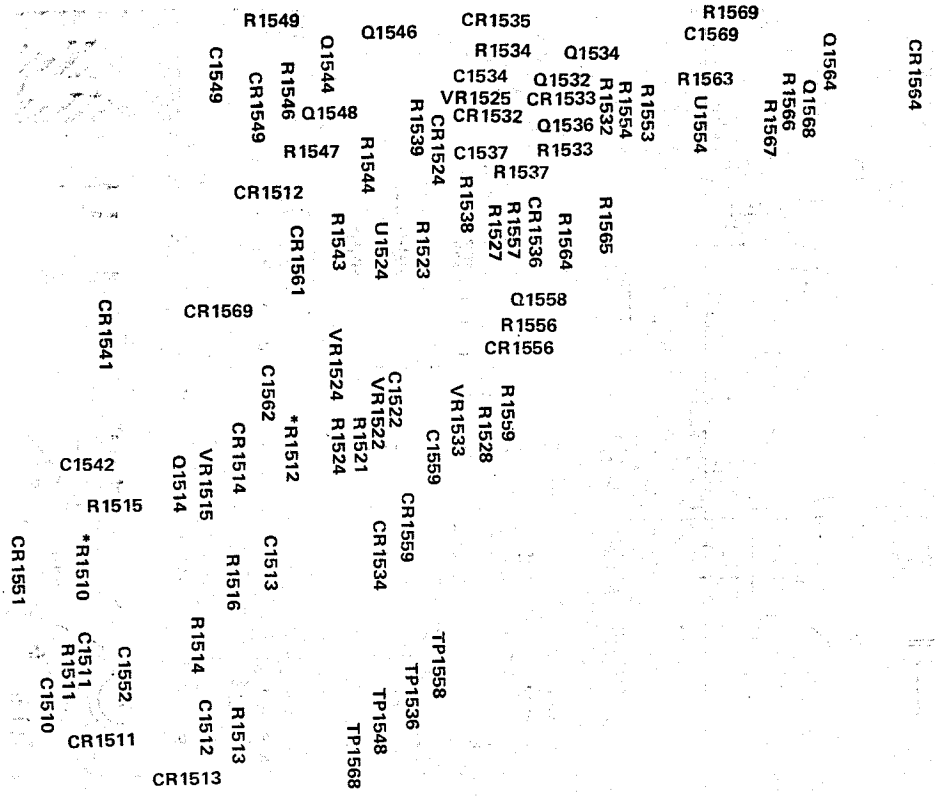

Fig. 7-21B. P/O A9 Interface circuit board below SN B080000.

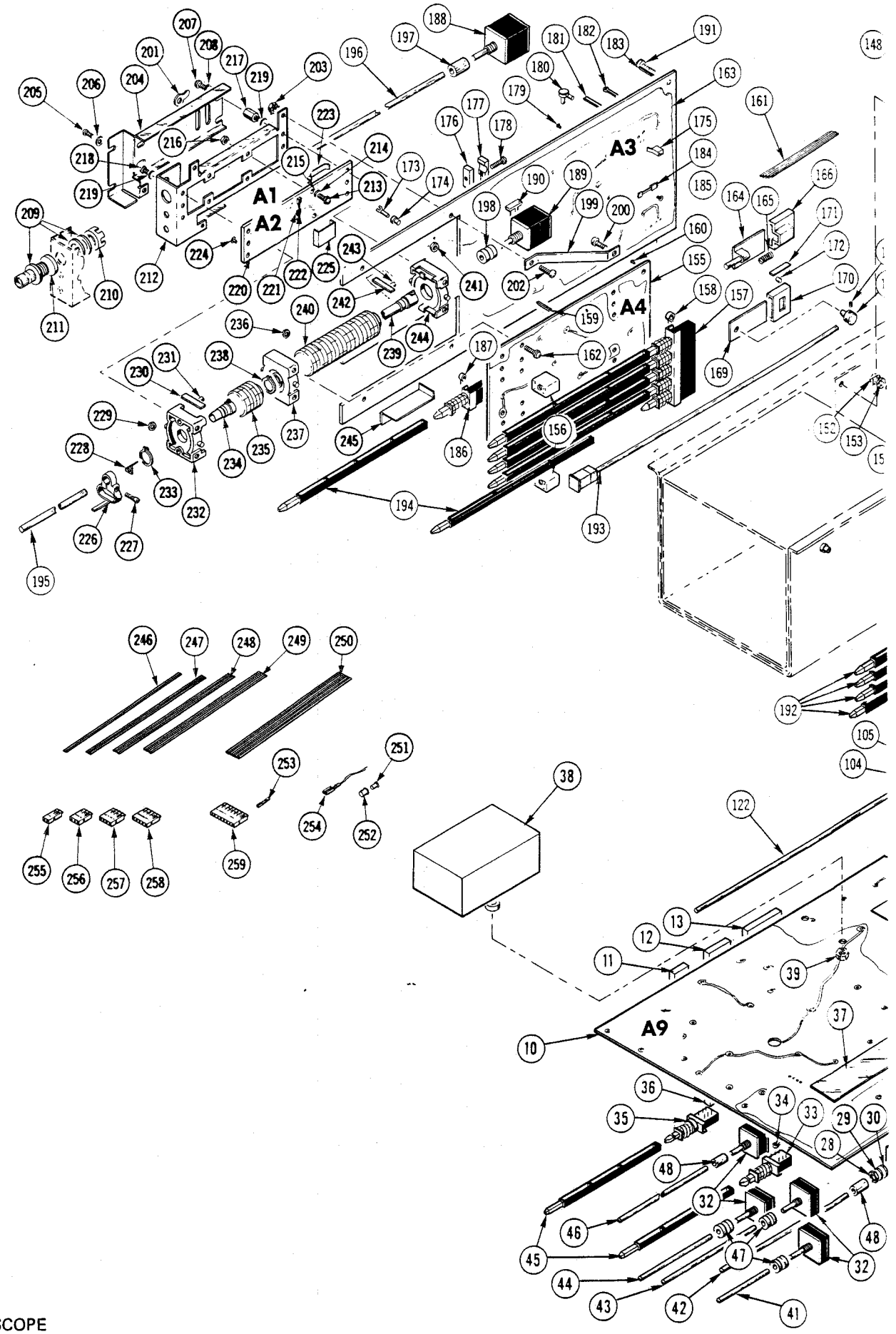
A1
A2
A3
A4
A9

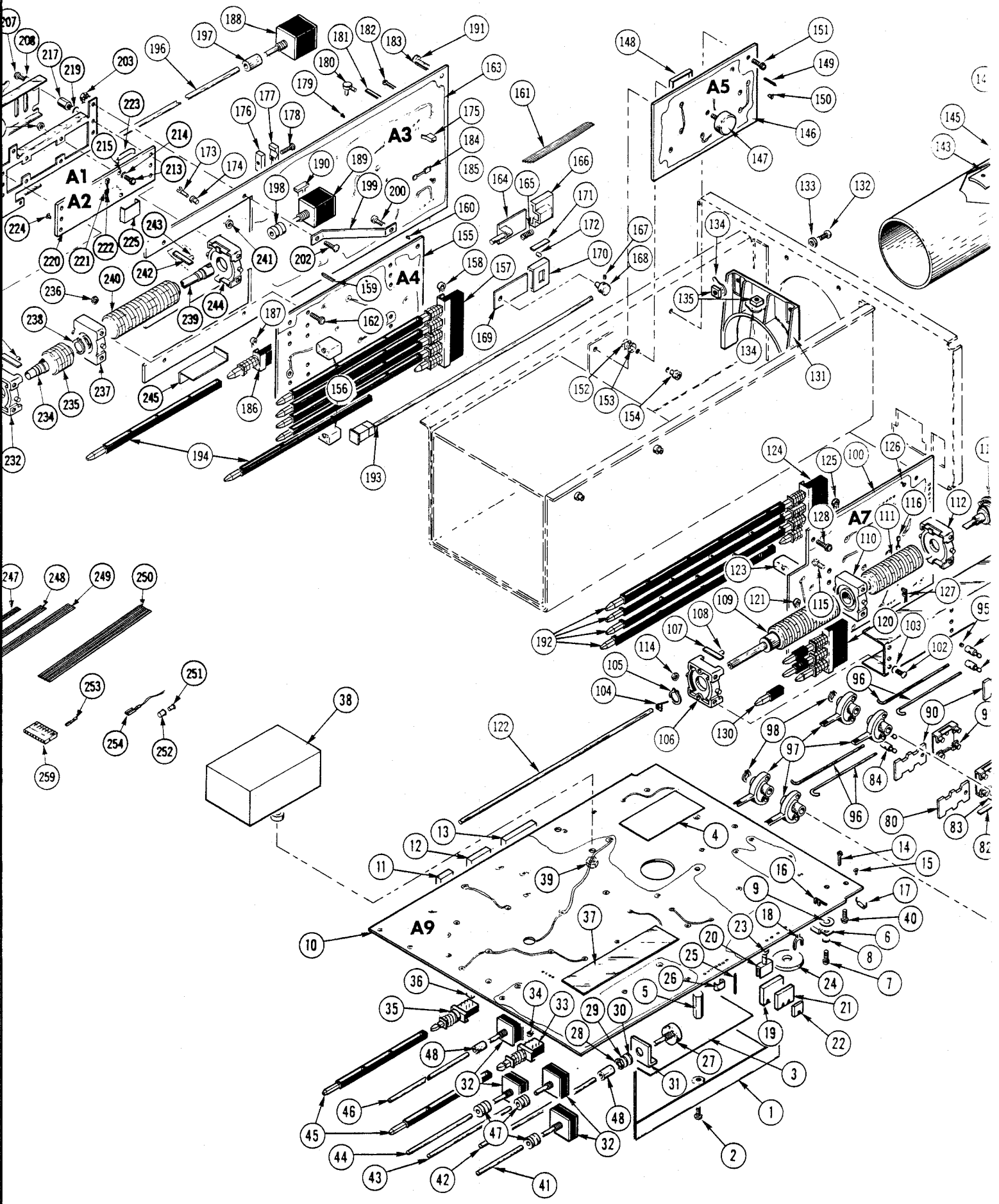
A1
A2
A3
A4
A5
A7
A9

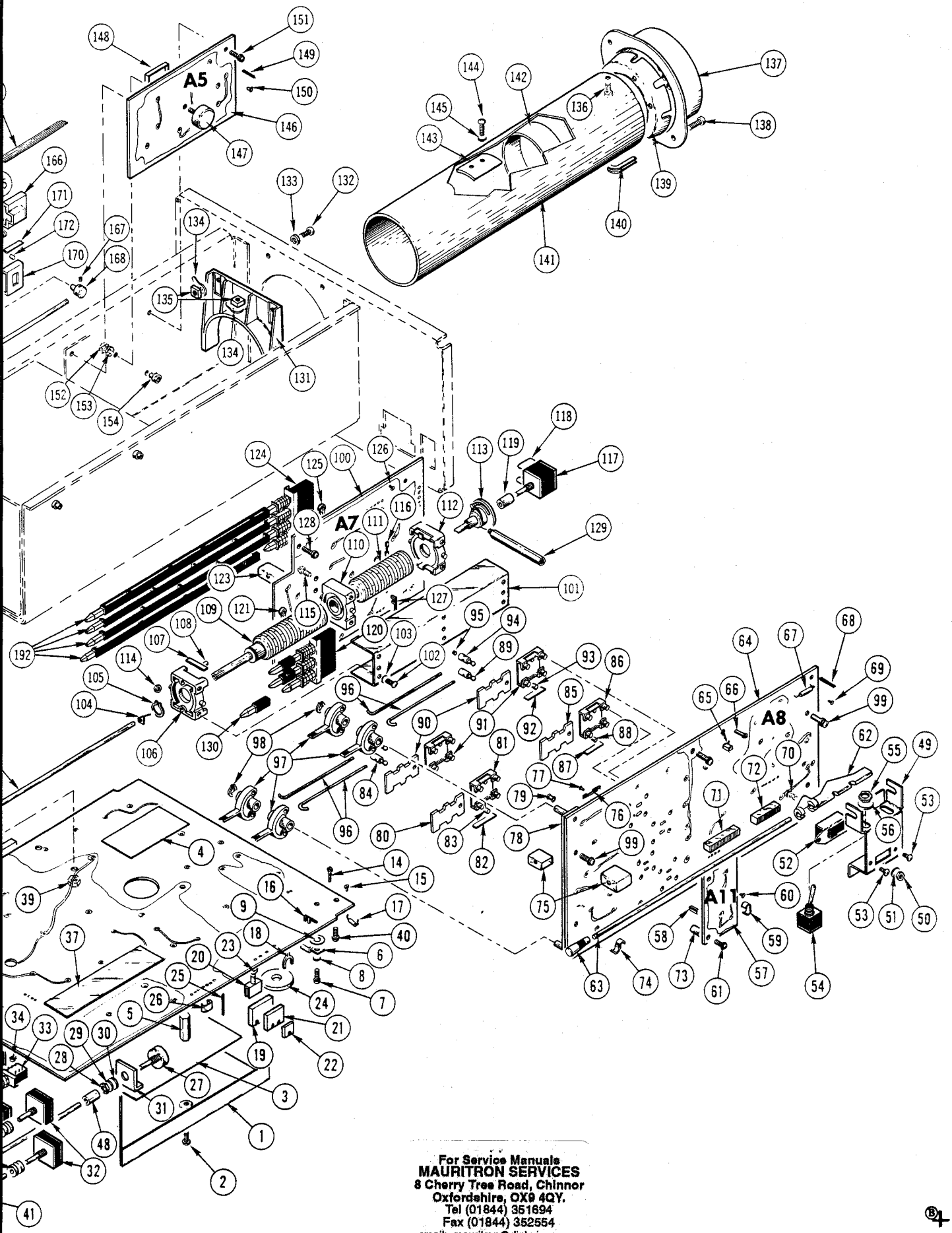

For Service Manuals
MAURITRON SERVICES
8 Cherry Tree Road, Chinnor
Oxfordshire, OX9 4QY.
Tel (01844) 351694
Fax (01844) 352554
email:- mauritron@dial.pipex.com

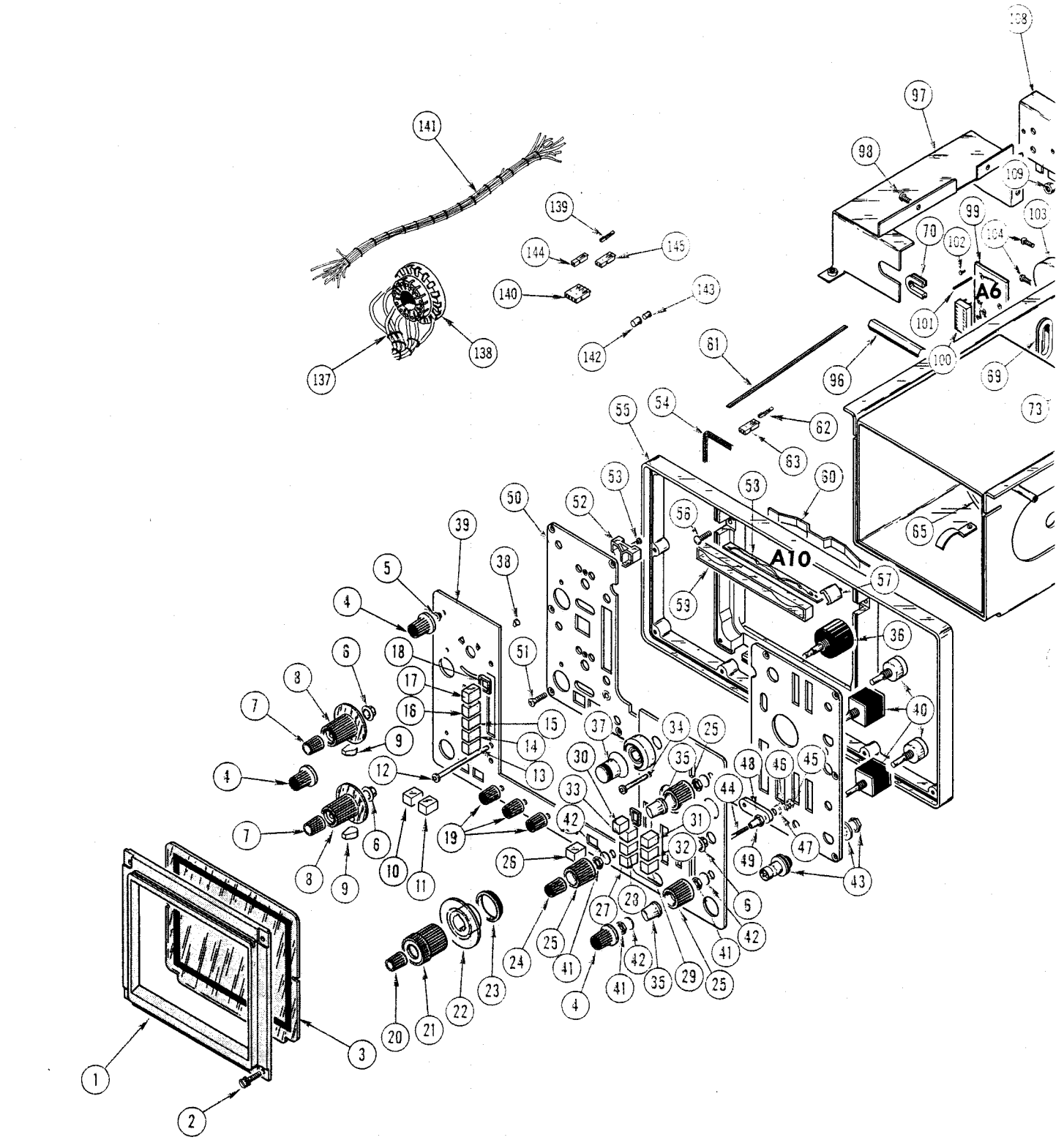
A10
A6

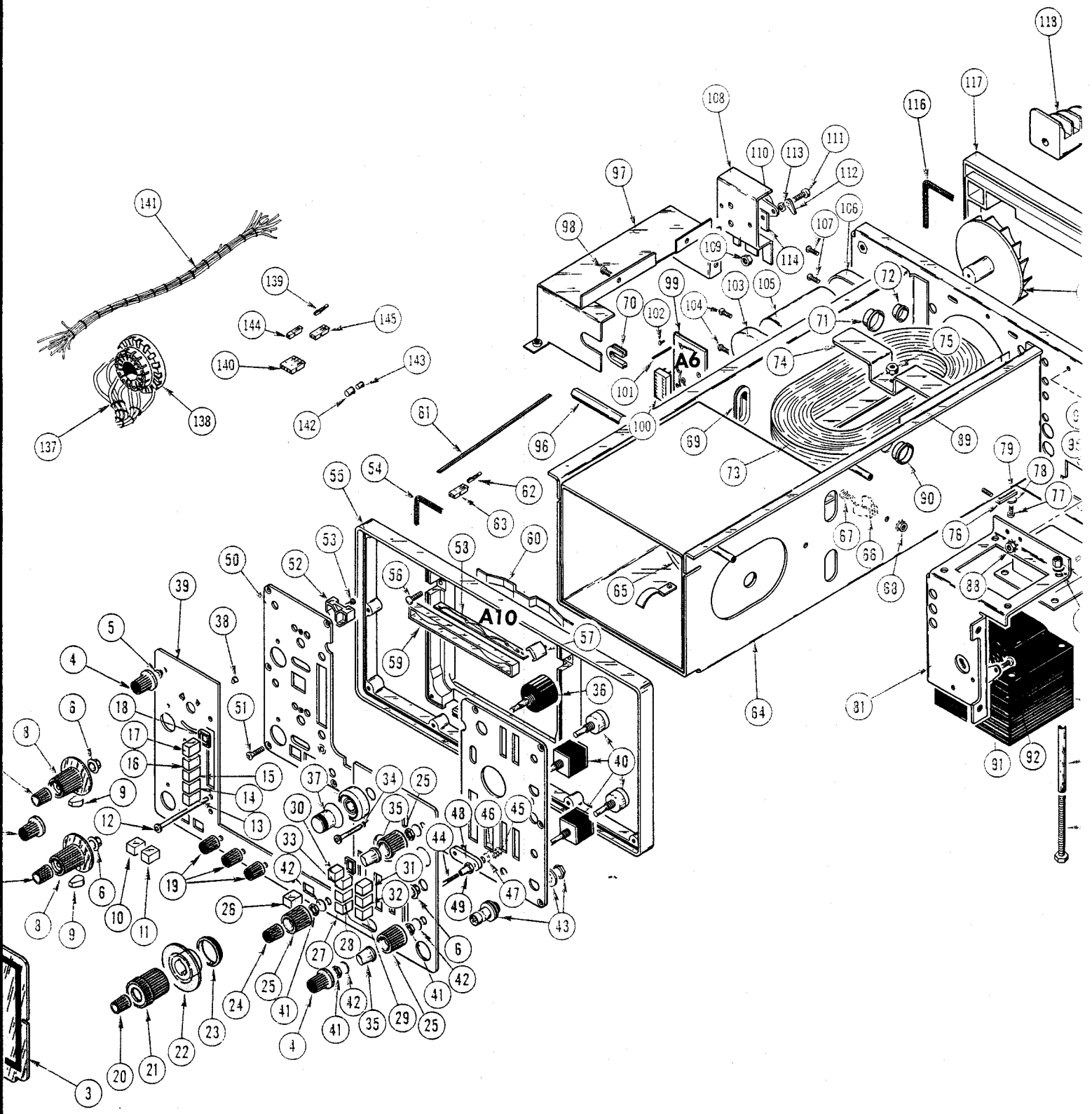
A6
A10

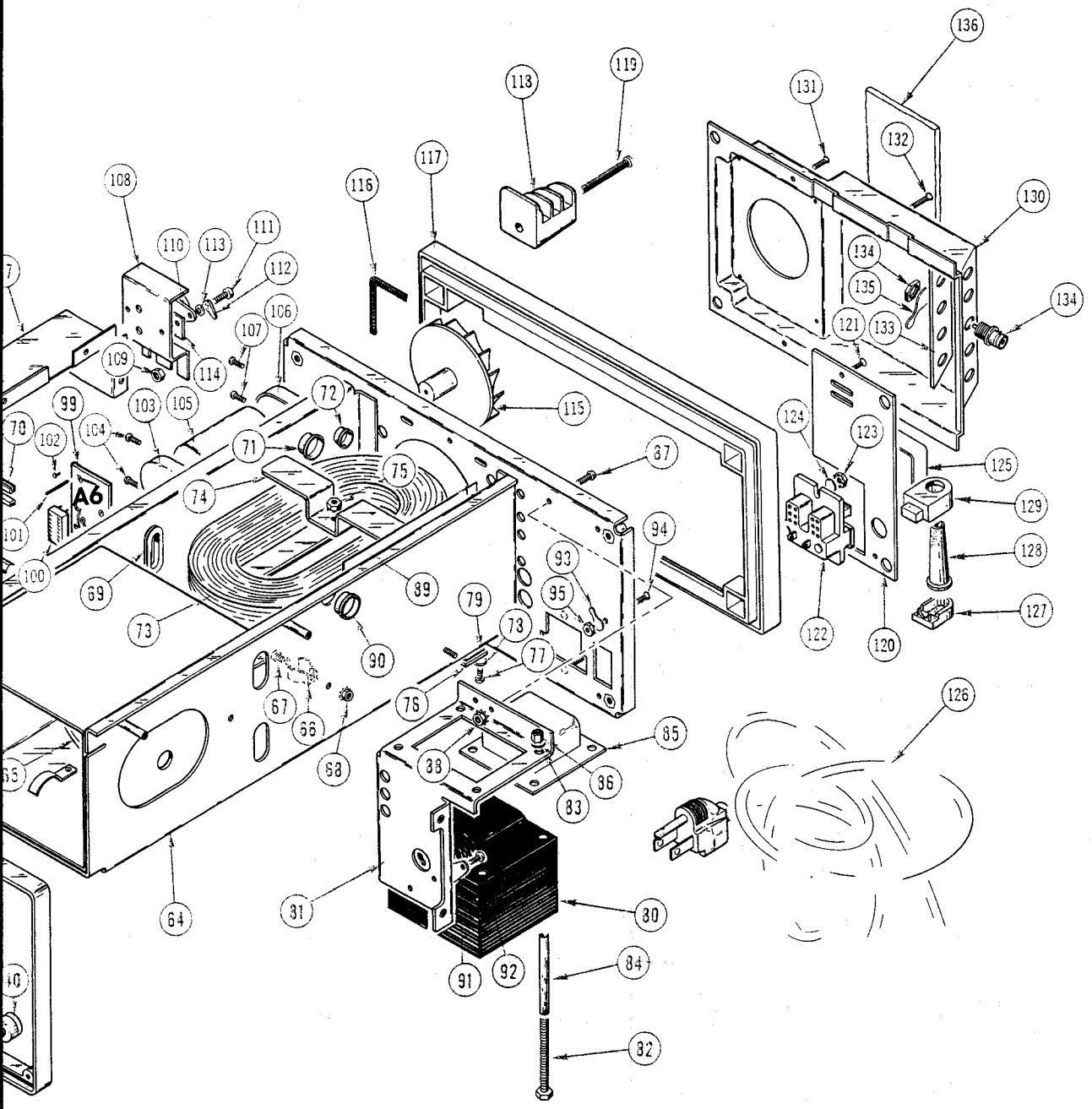
136
131
132
130
134
135
133
121
134
119
113
117
116
108
110
113
111
112
106
107
114
109
99
103
105
72
115
124
123
125
129
128
127
122
120
87
94
93
95
79
78
77
76
75
74
71
70
102
104
A6
101
100
69
73
89
90
67
66
68
65
85
86
83
88
126
64
81
80
91
92
84
82

CABINET

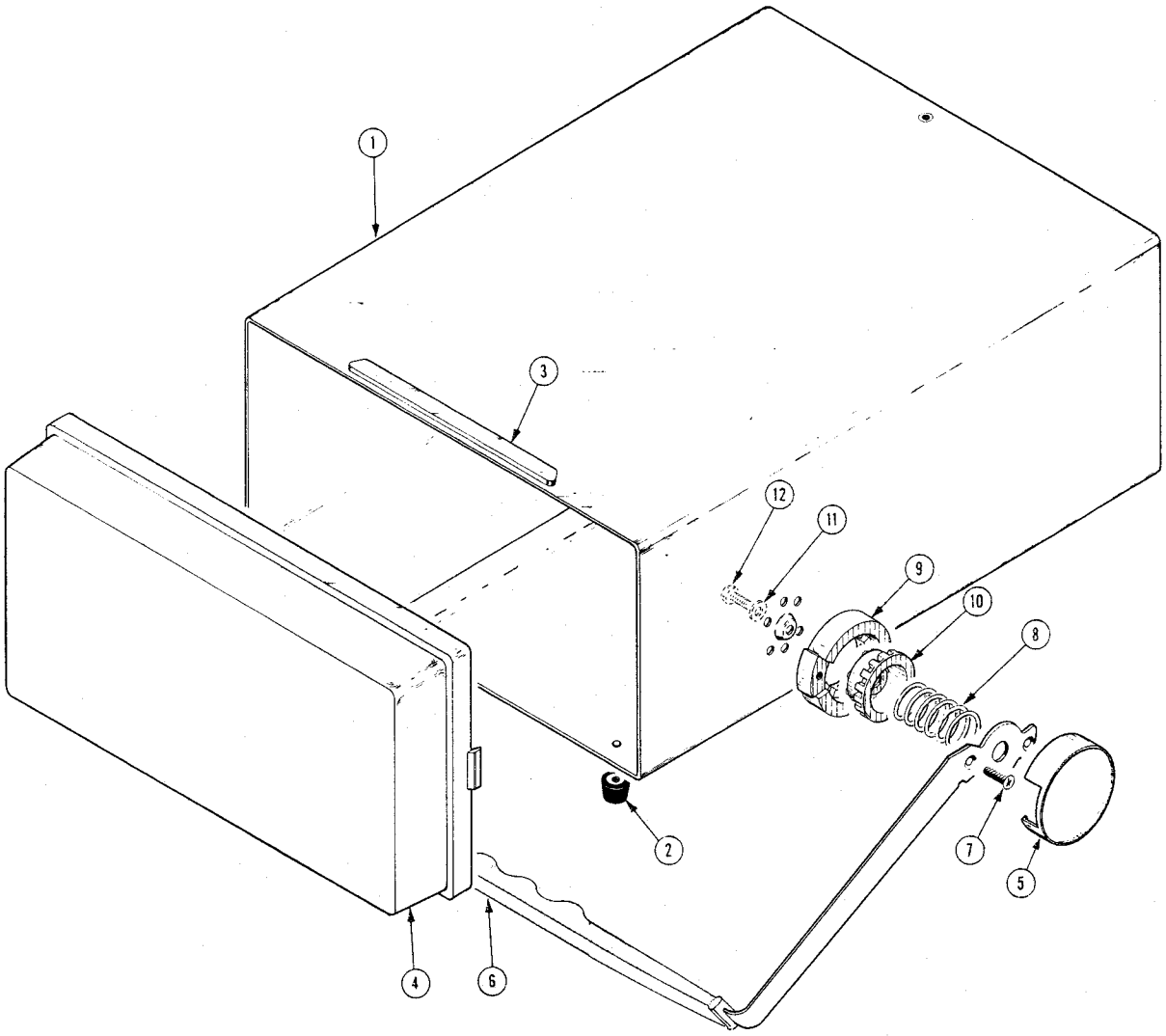

Fig. & Index No.	Tektronix Part No.	Serial/Model No. Eff	Dscont	Qty	1 2 3 4 5 Name & Description	Mfr Code	Mfr Part Numl
-1	437-0141-00			1	CABINET,SCOPE:	80009	437-0141-00
-2	348-0080-01			4	. FOOT,CABINET:	80009	348-0080-01
-3	352-0263-00			1	. HLDR,POUCH ASSY:	80009	352-0263-00
-4	200-1412-00			1	COVER,SCOPE:FRONT	80009	200-1412-00
-5	200-0602-00			2	COVER,HINGE:	80009	200-0602-00
-6	367-0140-03			1	HANDLE,CARRYING:	80009	367-0140-03
					(ATTACHING PARTS)		
-7	211-0512-00			4	SCREW,MACHINE:6-32 X 0.50" 100 DEG,FLH STL	83385	OBD
					- - - * - - -		
	334-1998-00			1	PLATE,IDENT:	80009	334-1998-00
-8	214-0516-00			2	SPRING,HLCPS:0.959 DIA X 1.250 INCH LONG	80009	214-0516-00
-9	214-0513-00	B010100	B130599	2	INDEX,HDL RING:	80009	214-0513-00
	214-0513-04	B130600		2	INDEX,HDL RING:	80009	214-0513-04
-10	214-0515-00	B010100	B130599	2	GEAR,HDL INDEX:	80009	214-0515-00
	214-0515-02	B130600		2	GEAR,HDL INDEX:	80009	214-0515-02
					(ATTACHING PARTS FOR EACH)		
-11	210-0805-00	B010100	B099999	1	WASHER,FLAT:0.204 ID X 0.438 INCH OD,STL	12327	OBD
	210-1182-00	B100000		1	WSHR,SPR TNSN:0.218 ID X 0.69 INCH OD	80009	210-1182-00
-12	213-0139-00			1	SCR,CAP,HEX HD:10-24 X 0.375 INCH LONG	14438	OBD
					- - - * - - -		

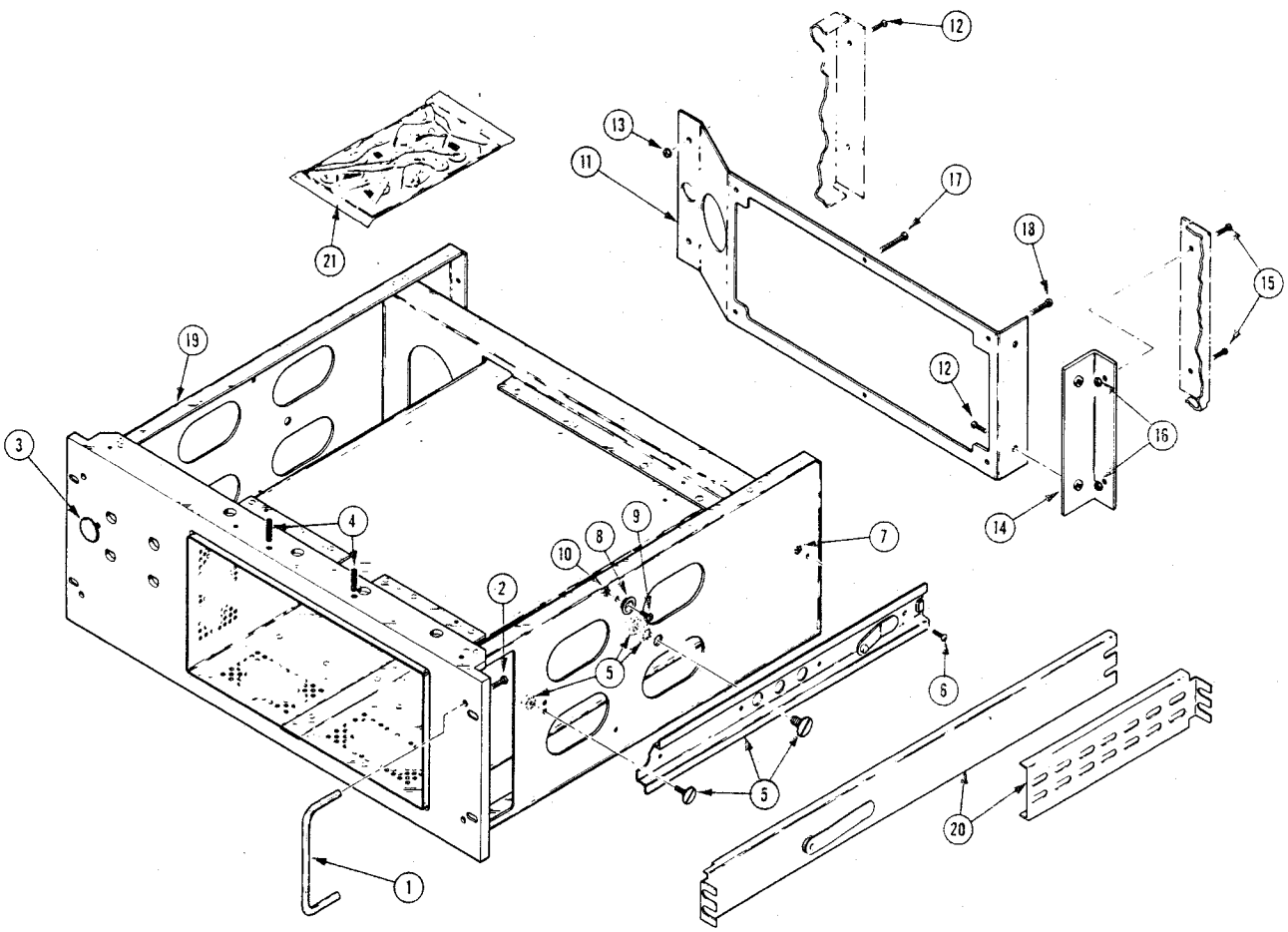

Fig. & Index No.	Tektronix Part No.	Serial/Model No. Eff	Dscont	Qty	1 2 3 4 5 Name & Description	Mfr Code	Mfr Part Number
4-	016-0556-00			1	ADPTR,RACK MTG:KIT	80009	016-0556-00
-1	367-0022-00			2	. HANDLE,BOW:1.5 X 4.5 INCH	06540	10353-B-1032-25A
					(ATTACHING PARTS FOR EACH)		
-2	213-0090-00			2	. SCREW,MACHINE:10-32 X 0.50 INCH,HEX	83385	OBD
					- - - * - - -		
-3	134-0067-00			4	. BUTTON,PLUG:GRAY PLASTIC	80009	134-0067-00
-4	213-0334-00			2	. SETSCREW:0.250-28 X 0.750 INCH,SOC STL	56878	OBD
-5	351-0104-00			1	. SLIDE SECT.,DWR:PAIR	80009	351-0104-00
					(ATTACHING PARTS)		
-6	212-0023-00			2	. SCREW,MACHINE:8-32 X 0.375 INCH,PNH STL	83385	OBD
-7	210-0458-00			2	. NUT,PLAIN,EXT W:8-32 X 0.344 INCH,STL	83385	OBD
					- - - * - - -		
-8	210-0808-00			2	. EYELET,METALLIC:CENTERING	63743	2515113-3TP-909
					(ATTACHING PARTS FOR EACH)		
-9	211-0507-00			1	. SCREW,MACHINE:6-32 X 0.312 INCH,PNH STL	83385	OBD
-10	210-0457-00			1	. NUT,PLAIN,EXT W:6-32 X 0.312 INCH,STL	83385	OBD
					- - - * - - -		
-11	386-2669-00			1	. SUPPORT,CABINET:REAR	80009	386-2669-00
					(ATTACHING PARTS)		
-12	212-0023-00			4	. SCREW,MACHINE:8-32 X 0.375 INCH,PNH STL	83385	OBD
-13	210-0458-00			2	. NUT,PLAIN,EXT W:8-32 X 0.344 INCH,STL	83385	OBD
					- - - * - - -		
-14	407-1350-00			1	. BRACKET,ANGLE:REAR	80009	407-1350-00
					(ATTACHING PARTS)		
-15	212-0023-00			2	. SCREW,MACHINE:8-32 X 0.375 INCH,PNH STL	83385	OBD
-16	210-0458-00			2	. NUT,PLAIN,EXT W:8-32 X 0.344 INCH,STL	83385	OBD
					- - - * - - -		
-17	211-0517-00			2	. SCREW,MACHINE:6-32 X 1 INCH,PNH,STL	83385	OBD
-18	212-0033-00			4	. SCREW,MACHINE:8-32 X 0.750 INCH,PNH STL	83385	OBD
-19	437-0154-01			1	. CABINET,SCOPE:	80009	437-0154-01
-20	351-0101-00			1	. SLIDE,DWR,EXT:PAIR	80009	351-0101-00
-21	016-0099-00			1	. HDW KIT,ELEK EQ:	80009	016-0099-00

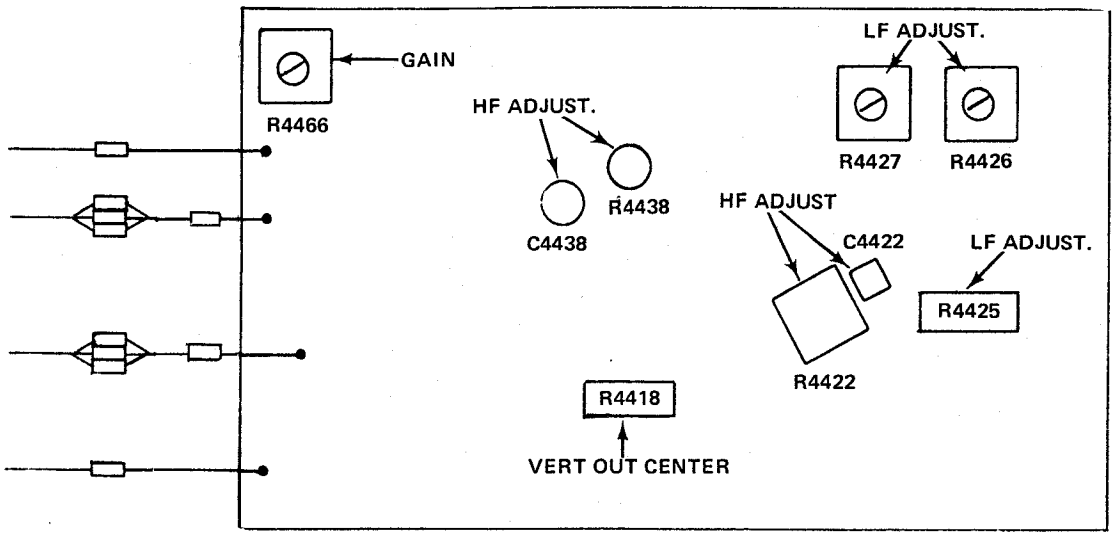

Ⓐ1

REV. JUNE 1974

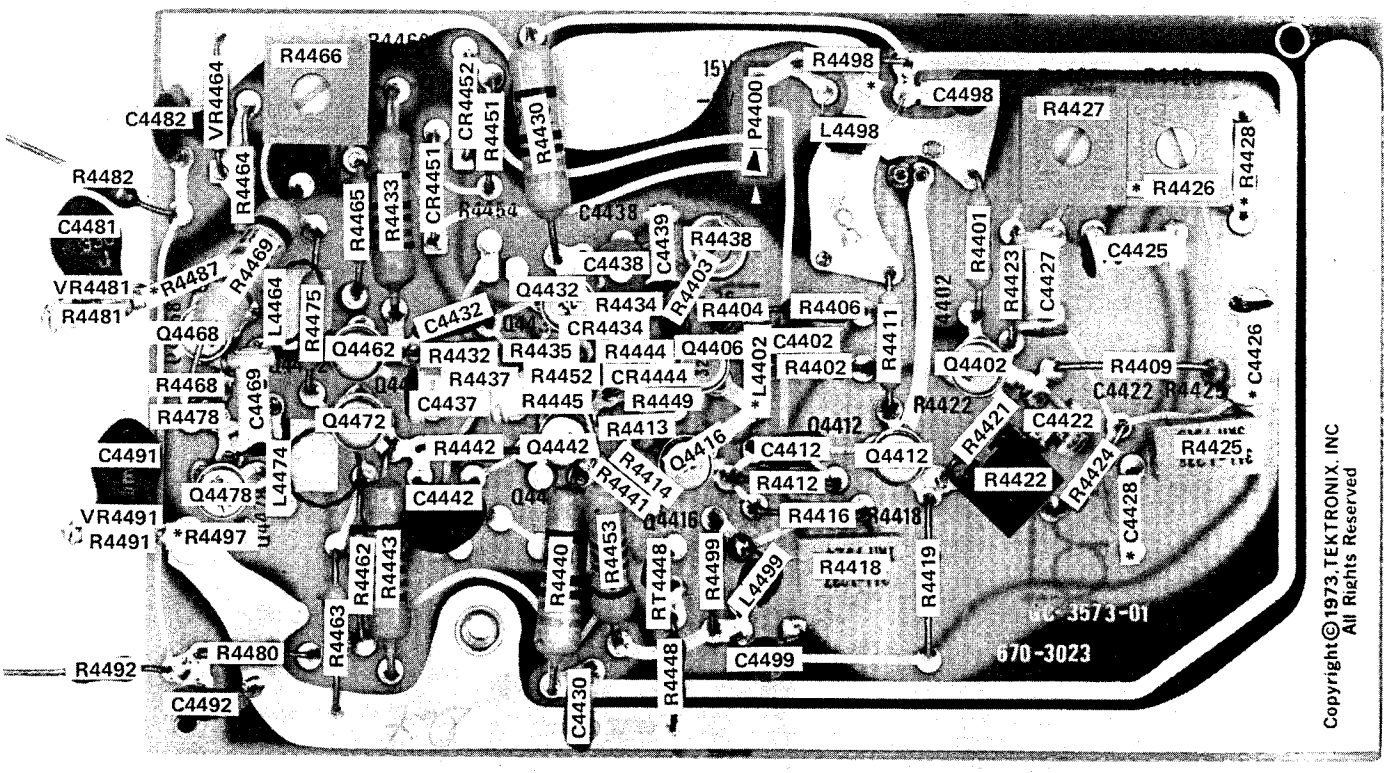

*See Parts List for serial number ranges.

REV. JUNE 1974

Located on back of board
R4474
R4431
R4436
R4408

M20,159

Ⓓ

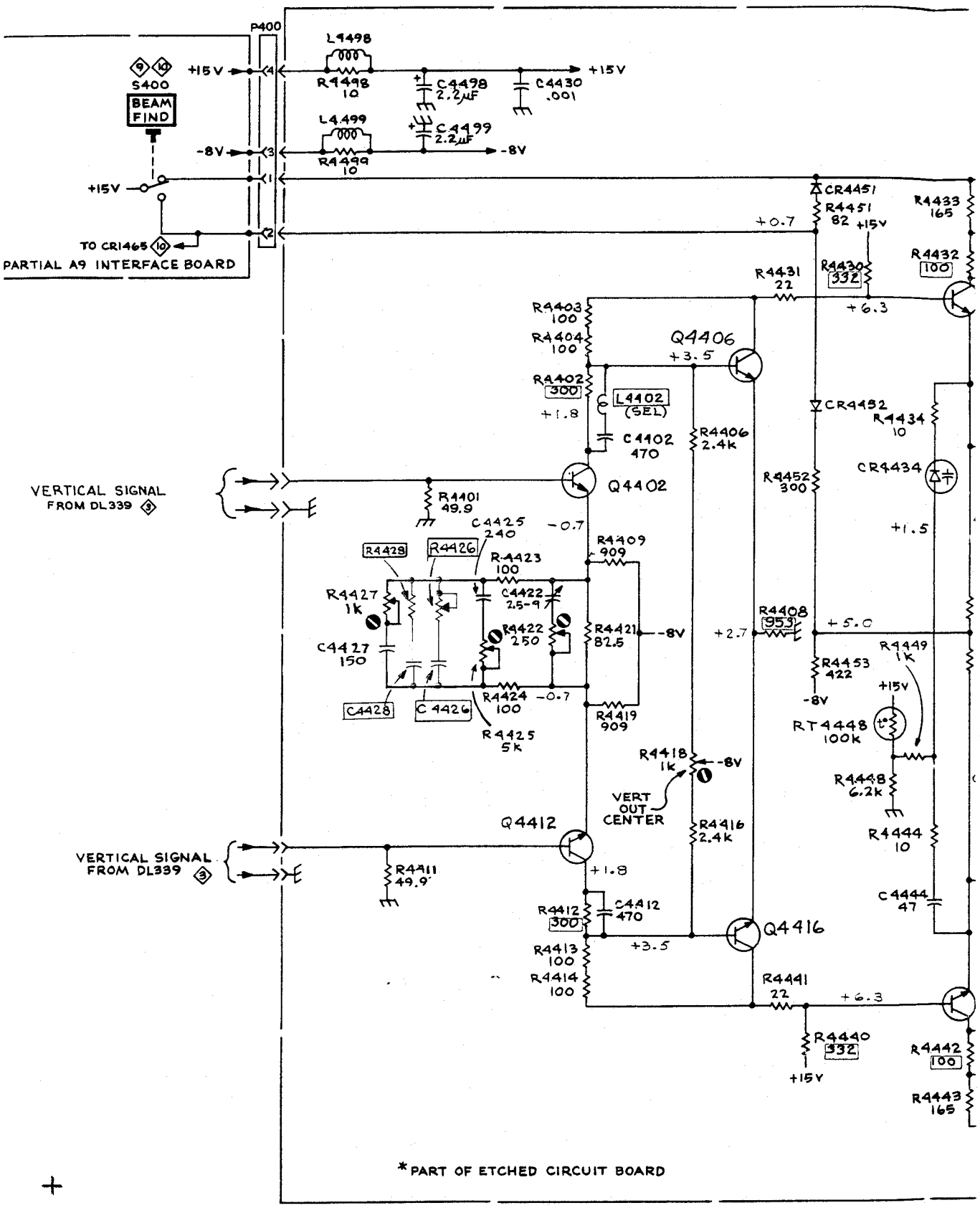
P400
S400
BEAM FIND
+15V
-8V
TO CR1465
PARTIAL A9 INTERFACE BOARD
L4498
R4498 10
C4498 2.2μF
C4430 .001
L4499
R4499 10
C4499 2.2μF
CR4451
R4451 82
R4433 165
R4432 100
R4430 332
R4431 22
+0.7
+6.3
R4403 100
R4404 100
Q4406
+3.5
R4402 300
L4402 (SEL)
+1.8
C4402 470
R4406 2.4k
CR4452
R4434 10
CR4434
R4452 300
VERTICAL SIGNAL FROM DL339
Q4402
R4401 49.9
C4425 240
-0.7
R4409 909
R4428
R4426
R4423 100
R4427 1k
C4422 2.5-9
R4422 250
R4421 82.5
-8V
+2.7
R4408 953
+5.0
+1.5
C4427 150
R4453 422
R4449 1k
R4424 100
-0.7
C4428
C4426
R4419 909
R4425 5k
RT4448 100k
R4418 1k
VERT OUT CENTER
R4448 6.2k
Q4412
R4416 2.4k
R4444 10
VERTICAL SIGNAL FROM DL339
R4411 49.9
+1.8
C4444 47
R4412 300
C4412 470
Q4416
+3.5
R4413 100
R4414 100
R4441 22
+6.3
R4440 332
R4442 100
R4443 165
*PART OF ETCHED CIRCUIT BOARD

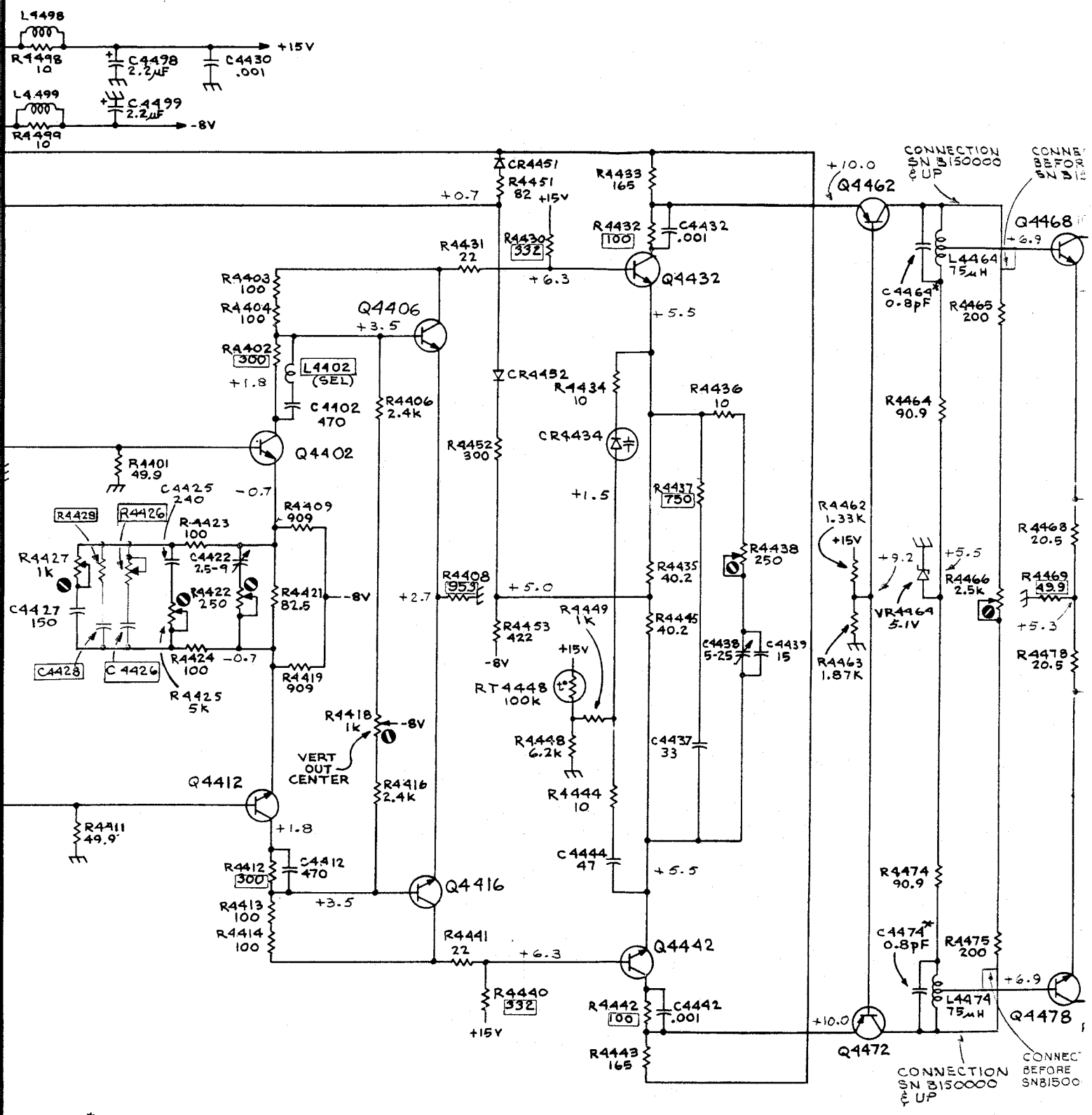

*PART OF ETCHED CIRCUIT BOARD

A5 VERTICAL OUTPUT BOARD

REV. JUNE 7

Ⓔ

VERTICAL OUTPUT
(B040000 AND UP)
M20159

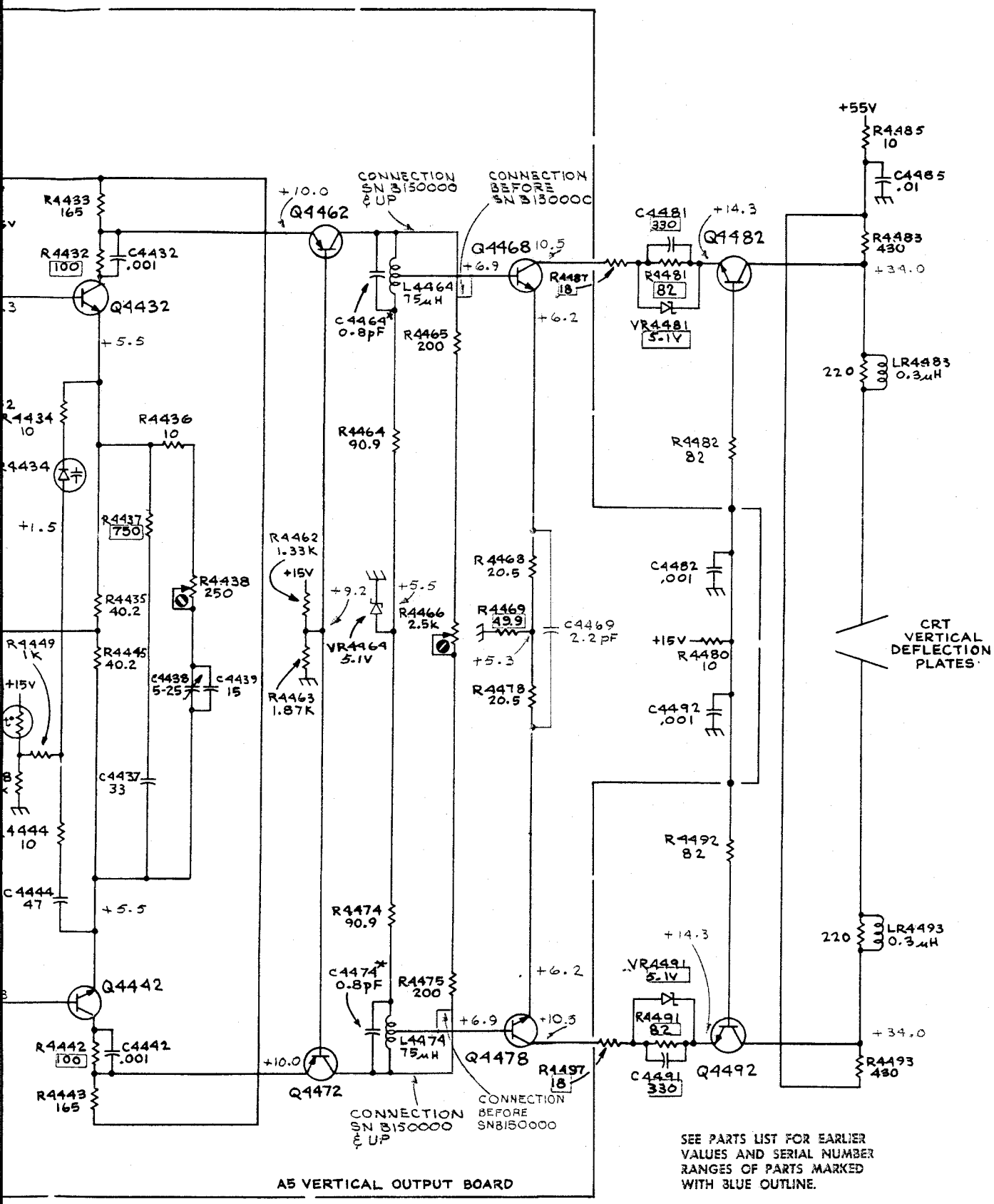

SEE PARTS LIST FOR EARLIER VALUES AND SERIAL NUMBER RANGES OF PARTS MARKED WITH BLUE OUTLINE.

A5 VERTICAL OUTPUT BOARD

REV. JUNE 74

VERTICAL OUTPUT AMPLIFIER 4

(B040000 AND UP) 670-3023

M20159

E

M20159 (670-3023)