Tektronix®

COMMITTED TO EXCELLENCE

For Service Manuals Contact
MAURITRON TECHNICAL SERVICES
8 Cherry Tree Rd. Chinnor
Oxon OX9 4QY
Tel:- 01844-351694 Fax:- 01844-352554
Email:- enquiries@mauritron.co.uk

PLEASE CHECK FOR CHANGE INFORMATION AT THE REAR OF THIS MANUAL.

465M OSCILLOSCOPE

INSTRUCTION MANUAL

Tektronix, Inc.
P.O. Box 500
Beaverton, Oregon 97077

070-2237-01

Serial Number _____

First Printing APR 1977
Revised JUN 1981

TABLE OF CONTENTS

Section/Para		Page
LIST OF ILLUSTRATIONS		iv
LIST OF TABLES		vii
SAFETY SUMMARY		viii
I	INTRODUCTION AND GENERAL INFORMATION	1-1
	1-1 INTRODUCTION	1-1
	a. Manual Purpose	1-1
	b. Manual Scope	1-1
	c. Manual Arrangement	1-1
	1-2 USE OF WARNING, CAUTION, AND NOTE SYMBOLS	1-1
	1-3 GENERAL INFORMATION	1-1
	a. Equipment Description	1-1
	b. Accessories Supplied	1-2
	c. Performance Conditions	1-2
	d. Electrical Characteristics	1-2
	Environmental Characteristics	1-9
	Physical Characteristics	1-10
II	SPECIAL TOOLS AND TEST EQUIPMENT	2-1
	2-1 SPECIAL TOOLS	2-1
	2-2 TEST EQUIPMENT	2-1
	2-3 CONSUMABLE MATERIALS	2-1
	2-4 RACKMOUNTING ACCESSORY	2-3
III	PREPARATION FOR USE AND SHIPMENT	3-1
	3-1 PREPARATION FOR USE	3-1
	a. Unpacking the Instrument	3-1
	b. Initial Inspection	3-1
	c. Faceplate Filter Installation	3-1
	d. Carrying Handle Positioning	3-1
	e. Operating Voltage Selection	3-1
	f. Power Cord Information	3-1
	3-2 OPERATING TEMPERATURE	3-3
	3-3 PREPARATION FOR SHIPMENT	3-3
IV	OPERATION INSTRUCTIONS	4-1
	4-1 THEORY OF OPERATION	4-1
	4-2 BASIC CIRCUIT FUNCTIONS	4-1
	a. Vertical Module	4-1
	b. Horizontal Module	4-1
	c. Main Module	4-4
	4-3 DETAILED CIRCUIT OPERATION	4-4
	a. Vertical Module	4-4
	(1) CH 1 and CH 2 Input	4-4
	(2) CH 1 and CH 2 Preamplifier and Vertical Switching	4-5
	(3) Vertical Switching Control	4-5
	(4) Delay Line Driver and Delay Line	4-7
	(5) Vertical Amplifier	4-8
	b. Horizontal Module	4-8
	(1) Trigger Input Amplifiers and Trigger Switching	4-8
	(2) A Trigger Generator	4-9
	(3) B Trigger Generator	4-13
	(4) A Sweep Generator	4-13
	(5) B Sweep Generator	4-16
	(6) Horizontal Preamplifier	4-19
	(7) +A GATE OUT Amplifier	4-20
	(8) +B GATE OUT Buffer	4-20
	(9) Sweep Control	4-20
	c. Main Module	4-23
	(1) Z Axis Amplifier	4-23
	(2) Crt Circuit	4-24
	(3) Horizontal Amplifier	4-26
	(4) +B GATE OUT Amplifier	4-26
	(5) Calibrator	4-28
	(6) Low-Voltage Power Supplies	4-28
	4-4 FUNCTIONS OF CONTROLS CONNECTORS, AND INDICATORS	4-29
	4-5 OPERATING CONSIDERATIONS	4-35
	a. Signal Connections	4-35
	b. Loading Effect of Input Connections	4-35
	c. Coaxial Cables	4-35
	d. Grounding	4-35
	e. Graticule	4-35
	f. Common-Mode Rejection	4-36
	g. Cascaded Operation	4-36

TABLE OF CONTENTS (cont)

Section/Para		Page
IV	OPERATION INSTRUCTIONS (cont)	
	h. Delayed-Sweep Magnification	4-36
	4-6 INITIAL INSTRUMENT TURN-ON	4-37
	4-7 PRELIMINARY ADJUSTMENTS	4-38
	a. Initial Control Settings	4-38
	b. Intensity Adjustment	4-38
	c. Focus and Astigmatism Adjustment	4-38
	d. Trace Rotation Adjustment	4-38
	e. Graticule Scale Illumination	4-39
	f. Probe Compensation	4-39
	4-8 NORMAL OPERATION	4-39
	a. Beam Finder	4-39
	b. Intensity and Focus	4-40
	c. Vertical Deflection System	4-40
	d. Horizontal Deflection System	4-40
	4-9 INSTRUMENT TURN-OFF	4-41
	4-10 APPLICATIONS	4-41
	a. Peak-to-peak Amplitude Measurement	4-41
	b. Instantaneous Amplitude Measurement	4-42
	c. Dual Trace Phase Difference Measurement	4-42
	d. High Resolution Phase Difference Measurement	4-43
	e. Time Duration and Frequency Measurement	4-43
	f. Rise Time Measurement	4-43
	g. Differential Time Measurement	4-43

WARNING

THE FOLLOWING SERVICING INSTRUCTIONS ARE FOR USE BY QUALIFIED PERSONNEL ONLY. TO AVOID PERSON INJURY, DO NOT PERFORM ANY SERVICING OTHER THAN THAT CONTAINED IN OPERATING INSTRUCTIONS UNLESS YOU ARE QUALIFIED TO DO SO.

Section/Para		Page
V	MAINTENANCE INSTRUCTIONS	5-1
	5-1 OPERATIONAL CHECKOUT (Performance Check)	5-1
V	MAINTENANCE INSTRUCTIONS (cont)	
	5-2 PREVENTIVE MAINTENANCE	5-21
	a. Preventive Maintenance Schedule	5-21
	b. External Preventive Maintenance	5-21
	c. Internal Preventive Maintenance	5-22
	5-3 TROUBLESHOOTING	5-23
	a. Troubleshooting Aids	5-24
	b. Troubleshooting Techniques	5-32
	5-4 CALIBRATION AND CHECKOUT AFTER REPAIR	5-33
	5-5 COMPONENT REMOVAL, REPLACEMENT, AND DISASSEMBLY	5-33
	a. Cabinet Top and EMI Shield Removal and Replacement	5-33
	b. Interconnecting Cables and Connectors	5-34
	c. Rear Panel Assembly Removal and Replacement	5-34
	d. Cabinet Bottom Removal and Replacement	5-35
	e. Vertical Module Removal	5-35
	f. Horizontal Module Removal	5-35
	g. Cathode Ray Tube (Crt) Removal	5-36
	h. Shaft-Knob Removal	5-37
	i. Interface Board Removal	5-37
	j. A and B Timing Switch Board Assembly Removal and Replacement	5-38
	k. A and B Timing Switch Disassembly	5-39
	l. Trigger Board Removal and Replacement	5-41
	m. Source and Coupling Switch Disassembly	5-41
	n. Horizontal Board Removal and Replacement	5-41
	o. Sweep Board Removal and Replacement	5-41
	p. Graticule Illumination Board Removal and Replacement	5-41
	q. Hybrid IC Removal and Replacement	5-42
	r. VOLTS/DIV Attenuator Disassembly	5-42
	s. Probe Disassembly and Repair	5-45

TABLE OF CONTENTS (cont)

Section/Para		Page
V	MAINTENANCE INSTRUCTIONS (cont)	
	t. Light Emitting Diode (LED) Replacement	5-45
	u. Push Button, Shaft Extension, and Shaft Extension Adapter Removal and Replacement	5-46
	5-6 CALIBRATION	5-46
	a. Preliminary Calibration Set-Up Procedure	5-46
	b. +32 Volt Power Supply	5-46
	c. Crt Bias	5-47
	d. Z-Axis Compensation	5-47
	e. Y-Axis Alignment	5-47
	f. Geometry	5-48
	g. Calibrator	5-48
	h. Dc Balance	5-48
	i. Vertical Gain	5-48
	j. Channel 2 Low Frequency Compensation	5-49
	k. Channel 1 Low Frequency Compensation	5-49
	l. High-Frequency Compensation	5-50
	m. Trigger Hysteresis and Slope Centering	5-51
	n. External Trigger Centering	5-52
	o. Sweep Start-Stop	5-53
	p. Horizontal Gain	5-54
	q. Magnifier Registration	5-54
	r. B Sweep Timing	5-54
	s. .5 μs Timing	5-55
	t. 5 ns Timing	5-56
	u. X Gain	5-56
VI	DIAGRAMS & CKT BD ILLUSTRATIONS	6-1
	6-1 INTRODUCTION	6-1
	6-2 ARRANGEMENT	6-1
	a. Schematic Diagrams	6-1
	b. Symbols and Reference Designators	6-1
	6-3 WAVEFORMS AND VOLTAGE TEST CONDITIONS	6-2
VII	ILLUSTRATED PARTS BREAKDOWN INTRODUCTION	7-1
	7-1 GENERAL	7-1
	7-2 INTRODUCTION	7-1
	7-3 MAINTENANCE PARTS LIST INTRODUCTION	7-1
	7-4 INDENTATION	7-1
	7-5 FIGURE CROSS REFERENCE NOTES	7-1
	7-6 SIMILAR ASSEMBLIES	7-1
	7-7 ATTACHING PARTS	7-1
	7-8 TEKTRONIX PART NUMBERING SYSTEM	7-2
	7-9 EXPLANATION OF COLUMNS IN SECTION VIII	7-2
	7-10 NUMERICAL INDEX INTRODUCTION	7-2
	7-11 SOURCE, MAINTENANCE, AND RECOVERABILITY (SMR) CODE	7-2
	7-12 REFERENCE DESIGNATION INDEX INTRODUCTION	7-2
	7-13 HOW TO USE THIS IPB	7-2
	7-14 ABBREVIATIONS AND LETTER SYMBOL LIST	7-2
	7-15 MANUFACTURER'S CODE CROSS REFERENCE LIST	7-3
VIII	ILLUSTRATED PARTS BREAKDOWN MAINTENANCE PARTS LIST	8-1
IX	ILLUSTRATED PARTS BREAKDOWN NUMERICAL INDEX	9-1
X	ILLUSTRATED PARTS BREAKDOWN REFERENCE DESIGNATION INDEX	10-1
XI	DIFFERENCE DATA SHEETS	11-1

LIST OF ILLUSTRATIONS

Figure	Title	Page
	465M with front cover	1-0
3-1	Removal and installation of faceplate filters	3-2
3-2	Carrying Handle positioning	3-3
3-3	Power section of rear panel	3-3
4-1	Overall block diagram (sheet 1 of 2)	4-2
4-1	Overall block diagram (sheet 2 of 2)	4-3
4-2	Channel switching gates	4-6
4-3	Trigger switching	4-10
4-4	Trigger signal paths with SOURCE set to NORM and COUPLING set to AC	4-11
4-5	A trigger generator	4-12
4-6	Simplified diagram of the A sweep generator	4-14
4-7	Waveforms produced during A sweep operation	4-15
4-8	Simplified diagram of the B sweep generator	4-17
4-9	Waveforms produced during B sweep generation	4-18
4-10	Functional block diagram of the sweep control integrated circuit and associated circuitry	4-21
4-11	Waveforms produced by holdoff control circuitry	4-22
4-12	Waveforms produced during AUTO sweep gate generation	4-23
4-13	Waveforms produced in the high-voltage oscillator	4-24
4-14	High-voltage rectifier	4-26
4-15	Dc restorer	4-27
4-16	(blank)	
4-17	Graticule measurement markings	4-35
4-18	Common-mode rejection of an undesired line-frequency	4-36
4-19	Delayed sweep magnification	4-37
4-20	Probe compensation	4-39
4-21	Example of peak-to-peak voltage measurement	4-42
4-22	Example of instantaneous voltage measurement	4-42
4-23	Example of dual trace phase difference measurement	4-43
4-24	Example of high resolution phase difference measurement	4-43
4-25	Example of time duration and frequency measurement	4-44
4-26	Example of rise time measurement	4-44
4-27	Example of time-duration measurement using A INTEN mode	4-44
4-28	Example of time-duration measurement using B DLY'D mode	4-45
5-1	Component value identification	5-25
5-2	Troubleshooting chart (sheet 1 of 5)	5-26
5-2	Troubleshooting chart (sheet 2 of 5)	5-27
5-2	Troubleshooting chart (sheet 3 of 5)	5-28
5-2	Troubleshooting chart (sheet 4 of 5)	5-29
5-2	Troubleshooting chart (sheet 5 of 5)	5-30
5-3	Semiconductor lead configurations	5-31
5-4	Multiconductor connector identification	5-34
5-5	Rear panel removal	5-35
5-6	Cabinet bottom removal	5-36
5-7	Vertical module removal	5-37
5-8	Horizontal module removal	5-38
5-9	Shaft-knob removal	5-39
5-10	Horizontal module board locator	5-39
5-11	TIME/DIV switch disassembly	5-40
5-12	Hybrid IC removal	5-42
5-13	VOLTS/DIV attenuator disassembly	5-44
5-14	Probe BNC connector removal and replacement	5-45
5-15	Light-emitting diode (LED) lead identification	5-45
5-16	+32 volt test point and adjustment location	5-46
5-17	Crt and Z-Axis test point and adjustment locations	5-47
5-18	Crt and Calibration test point and adjustment locations	5-47
5-19	Vertical adjustment locations	5-49
5-20	Trigger hysteresis and slope centering adjustment locations	5-51
5-21	External trigger centering setup	5-53

LIST OF ILLUSTRATIONS (cont)

Figure	Title	Page
5-22	Trigger and horizontal adjustment locations	5-54
5-23	Sweep adjustment locations	5-55
5-24	5 nanosecond timing adjustment locations	5-57
6-1	Schematic symbols	6-3

NOTE

The following illustrations are located on foldout pages in Section 6 Diagrams & Circuit Board Illustrations.

Figure	Title	Page
6-2	Controls, connectors & indicators	FO-1 (Front)
6-3	A1 Cam Switching board (top) component locations	FO-1 (Rear)
6-4	A1 Cam Switching board (bottom) component locations	FO-1 (Rear)
6-5	A3 Cam Switching board (top) component locations	FO-1 (Rear)
6-6	A3 Cam Switching board (bottom) component locations	FO-1 (Rear)
6-7	A5 Vertical, A2 Attenuator, & A4 Attenuator board component locations	FO-2 (Rear)
6-8	A6 Horizontal board component locations	FO-3 (Rear)
6-9	A7 Trigger board (SN B021600 & above) component locations	FO-4 (Rear)
6-10	A7 Trigger board (below SN B021600) component locations	FO-4 (Rear)
6-11	A8 Sweep board component locations	FO-5 (Rear)
6-12	A9 Timing Switch bd (A Sweep) component locations	FO-6 (Rear)
6-13	A10 Timing Switch bd (B Sweep) component locations	FO-6 (Rear)
6-14	A11 Interface board component locations	FO-8 (Rear)
8-1	Oscilloscope, 465M	8-0
8-2	Accessories and Cover Assembly	8-2
8-3	Cabinet and Handle Assembly	8-5
8-4	Circuit Board Assembly, Vertical Module	8-7
8-5	Circuit Board Assembly, Vertical (sheet 1 of 4)	8-12
8-5	Circuit Board Assembly, Vertical (sheet 2 of 4)	8-13
8-5	Circuit Board Assembly, Vertical (sheet 3 of 4)	8-14
8-5	Circuit Board Assembly, Vertical (sheet 4 of 4)	8-15
8-6	Circuit Board Assembly, Cam Switch Channel 1 (sheet 1 of 2)	8-22
8-6	Circuit Board Assembly, Cam Switch Channel 2 (sheet 2 of 2)	8-24
8-7	Circuit Board Assembly, Horizontal Module	8-26
8-8	Circuit Board Assembly, Trigger (sheet 1 of 3)	8-30
8-8	Circuit Board Assembly, Trigger (sheet 2 of 3)	8-31
8-8	Circuit Board Assembly, Trigger (sheet 3 of 3)	8-32
8-9	Circuit Board Assembly, A Timing (sheet 1 of 2)	8-36
8-9	Circuit Board Assembly, A Timing (sheet 2 of 2)	8-38
8-10	Circuit Board Assembly, Horizontal	8-40
8-11	Circuit Board Assembly, Sweep (sheet 1 of 3)	8-43
8-11	Circuit Board Assembly, Sweep (sheet 2 of 3)	8-44
8-11	Circuit Board Assembly, Sweep (sheet 3 of 3)	8-45
8-12	Electron Tube Assembly	8-50

LIST OF ILLUSTRATIONS (cont)

Figure	Title	Page
8-13	Main Chassis Assembly	8-53
8-14	Circuit Board Assembly, Interface (sheet 1 of 4)	8-58
8-14	Circuit Board Assembly, Interface (sheet 2 of 4)	8-59
8-14	Circuit Board Assembly, Interface (sheet 3 of 4)	8-60
8-14	Circuit Board Assembly, Interface (sheet 4 of 4)	8-61

For Service Manuals Contact
MAURITRON TECHNICAL SERVICES
8 Cherry Tree Rd, Chinnor
Oxon OX9 4QY
Tel:- 01844-351694 Fax:- 01844-352554
Email:- enquiries@mauritron.co.uk

LIST OF TABLES

Number	Title	Page
1-1	Electrical Characteristics	1-2
1-2	Environmental Characteristics	1-9
1-3	Physical Characteristics	1-10
2-1	Test Equipment List	2-1
2-2	Consumable Materials List	2-3
4-1	Attenuation and Gain Switching Sequence	4-5
4-2	Functions of Controls, Connectors, and Indicators	4-30
5-1	Operational Checkout Procedures (Performance Check)	5-1
5-2	Preventive Maintenance Schedule	5-21
5-3	External Inspection Checklist	5-22
5-4	Internal Inspection Checklist	5-23
5-5	Power Supply Tolerance and Ripple	5-32
6-1	Reference Designators	6-1

For Service Manuals Contact
MAURITRON TECHNICAL SERVICES
8 Cherry Tree Rd, Chinnor
Oxon OX9 4QY
Tel:- 01844-351694 Fax:- 01844-352554
Email:- enquiries@mauritron.co.uk

OPERATORS SAFETY SUMMARY

The general safety information in this part of the summary is for both operating and servicing personnel. Specific warnings and cautions will be found throughout the manual where they apply, but may not appear in this summary.

Terms In This Manual

CAUTION statements identify conditions or practices that could result in damage to the equipment or other property.

WARNING statements identify conditions or practices that could result in personal injury or loss of life.

Terms As Marked on Equipment

CAUTION indicates a personal injury hazard not immediately accessible as one reads the marking, or a hazard to property including the equipment itself.

DANGER indicates a personal injury hazard immediately accessible as one reads the marking.

Symbols As Marked on Equipment

DANGER — High voltage.

Protective ground (earth) terminal.

ATTENTION — refer to manual.

Power Source

This product is intended to operate from a power source that will not apply more than 264 volts rms between the supply conductors or between either supply conductor and ground. A protective ground connection by way of the grounding conductor in the power cord is essential for safe operation.

Grounding the Product

This product is grounded through the grounding conductor of the power cord. To avoid electrical shock, plug the power cord into a properly wired receptacle before connecting to the product input or output terminals. A protective ground connection by way of the grounding conductor in the power cord is essential for safe operation.

Danger Arising From Loss of Ground

Upon loss of the protective-ground connection, all accessible conductive parts (including knobs and controls that may appear to be insulating) can render an electric shock.

Use the Proper Power Cord

Use only the power cord and connector specified for your product.

Use only a power cord that is in good condition.

Refer cord and connector changes to qualified service personnel.

Use the Proper Fuse

To avoid fire hazard, use only the fuse of correct type, voltage rating and current rating as specified in the parts list for your product.

Refer fuse replacement to qualified service personnel.

Do Not Operate in Explosive Atmospheres

To avoid explosion, do not operate this product in an explosive atmosphere unless it has been specifically certified for such operation.

Do Not Remove Covers or Panels

To avoid personal injury, do not remove the product covers or panels. Do not operate the product without the covers and panels properly installed.

@ AUG 1980

SERVICE SAFETY SUMMARY

FOR QUALIFIED SERVICE PERSONNEL ONLY

Refer also to the preceding Operators Safety Summary.

Do Not Service Alone

Do not perform internal service or adjustment of this product unless another person capable of rendering first aid and resuscitation is present.

Use Care When Servicing With Power On

Dangerous voltages exist at several points in this product. To avoid personal injury, do not touch exposed connections and components while power is on.

Disconnect power before removing protective panels, soldering, or replacing components.

Power Source

This product is intended to operate from a power source that will not apply more than 264 volts rms between the supply conductors or between either supply conductor and ground. A protective ground connection by way of the grounding conductor in the power cord is essential for safe operation.

For Service Manuals Contact
MAURITRON TECHNICAL SERVICES
8 Cherry Tree Rd, Chinnor
Oxon OX9 4QY
Tel:- 01844-351694 Fax:- 01844-352554
Email:- enquiries@mauritron.co.uk

465M

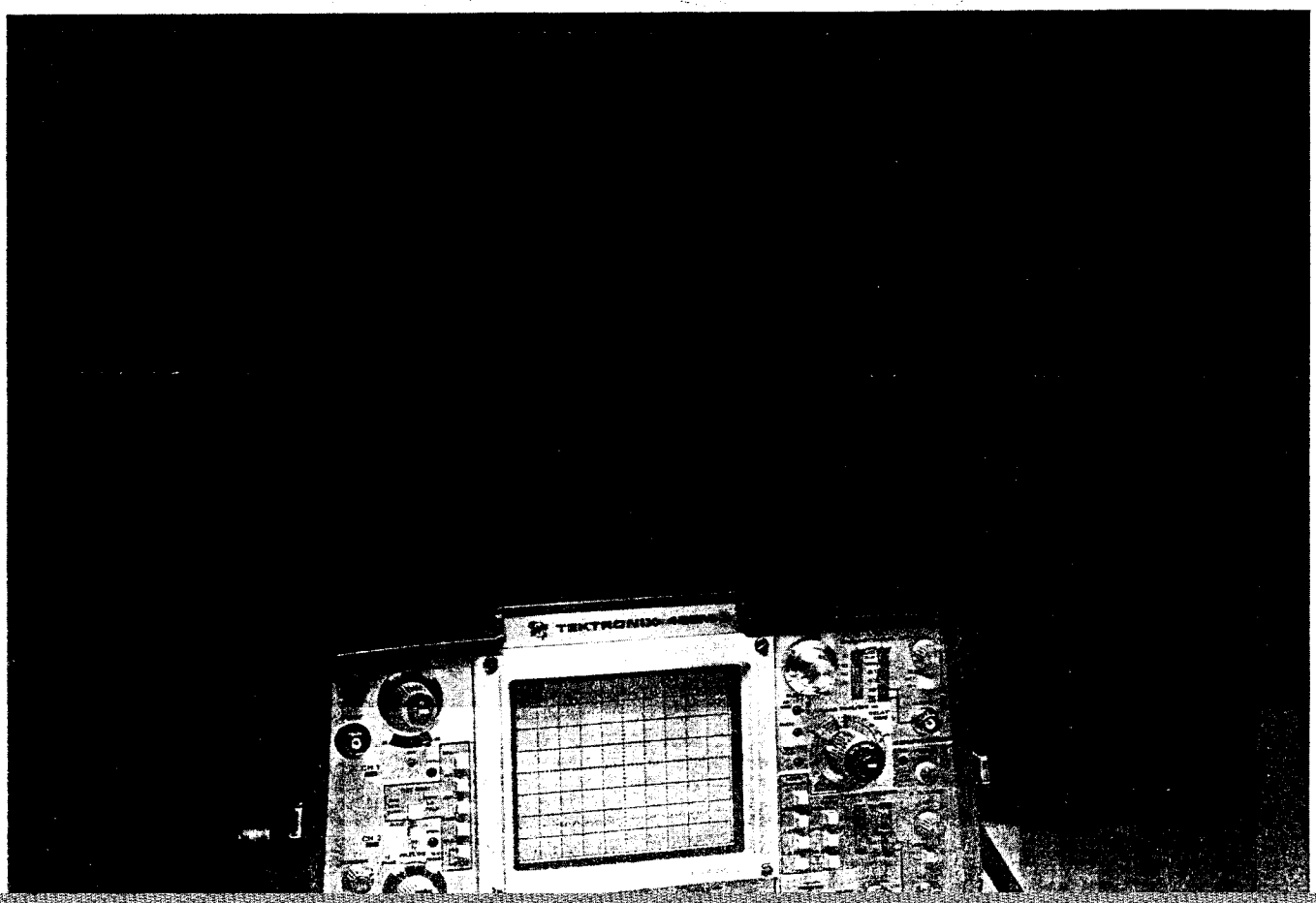

Table 1-1. Electrical Characteristics—Continued

Characteristics	Performance Requirements	Supplemental Information
SIGNAL OUTPUTS—Cont.		
B Gate		
Output Voltage (positive)	5 V ±20%	Starts at approxinately 0 V.
Output Resistance		Approximately 500 Ω.

Table 1-2. Environmental Characteristics

Characteristics	Description
Temperature	
Non-operating	−62°C to +85°C
Operating	−15°C to +55°C
Humidity	5 cycles (120 hours) referred to MIL-T-28800B.
Altitude	
Non-operating	To 50,000 feet.
Operating	To 15,000 feet; maximum operating temperature decreased 1°C/1000 feet above 5000 feet.
Vibration	
Operating and Non-operating	With the instrument complete and operating, and vibration frequency swept from 10 to 55 to 10 Hz at 1 minute per sweep. Vibrate 15 minutes in each of the three major axes at 0.015-inch total displacement. Hold 10 minutes at any major resonance, or if none, at 55 Hz. Total time 75 minutes.
Shock	30 g's 1/2 sine, 11 ms duration, 3 shocks in each direction along 3 major axes, for a total of 18 shocks.
Transportation	Qualified under National Safe Transit Committee Test Procedure 1A-B-1 and 2.
Transit Drop (non-operating)	Drop unboxed instrument 8-inches on each corner and face, a total of 14 drops. Drop test performed on a rigid wooden surface. Per MIL-T-28800B as modified by US Government purchase description AF82-PD-332 configuration B.
Drip-proof (Front cover on, non-operating)	Spray from 3-feet above instrument with instrument tilted 15° away from horizontal plane in each of 4 directions and horizontal. Per MIL-T-28800B Style C.
Bench Handling (operating)	Edge lifts and drops on work bench on bottom and rear faces, total of 8 drops. Per MIL-T-28800B.

Table 1-3. Physical Characteristics

Characteristics	Description
Weight	
465M with Panel cover, modules, and accessories	27.0 lbs (12.2 kg).
Without Panel Cover and accessories	24.0 lbs (10.9 kg).
Domestic Shipping Weight	34.2 lbs (15.5 kg).
Height	
With Feet	7.05 inches (179.1 mm).
Width	
With Handle	13.65 inches (346.7 mm).
Without Handle	12.5 inches (317.5 mm).
Depth	
Including Panel Cover	21.45 inches (544.8 mm).
Handle Extended	24.1 inches (612.1 mm).
Construction	Plastic cabinet, aluminum alloy chassis and panel, with glass laminate etched wiring circuit boards.
Finish	Anodized front panel and textured cabinet.

For Service Manuals Contact
MAURITRON TECHNICAL SERVICES
8 Cherry Tree Rd, Chinnor
Oxon OX9 4QY
Tel:- 01844-351694 Fax:- 01844-352554
Email:- enquiries@mauritron.co.uk

@ AUG 1980

SECTION II
SPECIAL TOOLS AND TEST EQUIPMENT

2-1. SPECIAL TOOLS. No special tools are required.

2-2. TEST EQUIPMENT. Test equipment required to maintain the instrument is listed in Table 2-1. Equivalent items may be used if the recommended items are not available.

2-3. CONSUMABLE MATERIALS. Table 2-2 lists the consumable materials recommended for maintaining the instrument. Equivalent materials may be used if those recommended are not available.

Table 2-1. Test Equipment List

Tool/Equipment Number	Nomenclature	Application	Description
Tektronix PG 506[1]	Calibration Generator and Fast-rise Pulse Generator	Vertical deflection system checks and adjustments; trigger range check; trigger view check and adjustment; high and low frequency compensation adjustments.	Range, 1 kilohertz and 100 kilohertz square-wave; output amplitude, 20 millivolts to 20 volts; accuracy, within 0.4%; fast-rise output risetime, 1 nanosecond or less.
Tektronix TG 501[1]	Time-Mark Generator	Sweep timing checks and adjustments; Y-axis adjustments; geometry adjustments.	Marker range, 10 nanoseconds to 0.5 seconds; accuracy, within 0.4%.
Tektronix SG 502[1]	Sine-wave Generator Low Frequency	Trigger checks.	Range, 30 hertz to 50 kilohertz; output amplitude, 10 millivolts to 4 volts peak to peak.
Tektronix SG 503[1]	Sine-wave Generator	Bandwidth checks; cascade sensitivity checks; trigger checks and adjustments.	Range, 4 megahertz to 100 megahertz with a 50 kilohertz reference; accuracy, within 3%; output amplitude, 5 millivolts to 4 volts peak to peak.
Tektronix DM 501A[1]	Digital Multimeter	Power supply checks and adjustments; calibrator adjustments; crt bias adjustments; troubleshooting.	Range, −10 volts dc to +50 volts dc; 300 volts ac, 2 kilohm to 20 megohm; accuracy, within 0.1%.
465M	Oscilloscope	Sweep gate output checks; calibrator output checks; Z-axis compensation adjustment and calibration checks; troubleshooting waveforms.	Bandwidth, at least 100 megahertz; vertical deflection factor, at least 5 millivolts/division; sweep rate, at least 2 microseconds/division.
Tektronix part 017-0061-00	CT-3 Signal Pickoff	Trigger checks.	Assembly, signal pickoff (CT-3).

See footnotes at the end of the table.

Table 2-1. Test Equipment—Continued

Tool/Equipment Number	Nomenclature	Application	Description
Tektronix part 011-0049-01 (2 required)	Feedthrough Termination	Test signal termination for performance checks and adjustments.	Termination, coaxial, 50 ohm, 2 watt, dc to 500 megahertz, BNC male to BNC female.
Tektronix part 067-0538-00	Input RC Normalizer	Vertical deflection system attenuator compensation adjustments.	Calibration fixture, 1 megohm with 20 picofarad input RC time constant, BNC male to BNC female.
Tektronix part 012-0057-01 (2 required)	Coaxial Cable with BNC Male Connectors	Test signal interconnections.	Cable assembly, RF, 50 ohm, 43 inches, BNC male to BNC male.
Tektronix part 067-0525-01 (2 required)	Dual Input Coupler	Matched dual test signal inputs.	Calibration fixture, BNC female input to dual BNC male output with RG-58C/U cable matched within 0.1 inch.
Tektronix part 103-0030-00	T Connector	Test signal interconnections	Adapter, connector, BNC, Tee, BNC male to two BNC female, type UG-274B/U.
Tektronix part 017-0063-00 Manufacturers part 0874-9700.	Adapter, GR874 to BNC female	Test signal interconnections.	Adapter, connector, BNC female to GR.
Tektronix part 017-0064-00. Manufacturers part 874QBPA	Adapter, GR874 to BNC male	Test signal interconnections.	Adapter, connector, BNC male to GR.
Tektronix part 011-0059-02	Attenuator, 10X, 50 ohm	Test signal interconnections.	Attenuator, 50 ohm, 2 watt, dc to 2 gigahertz, BNC female to BNC male.
Tektronix part 010-0277-00	Probe, high voltage	Used with DM 501A for power supply checks and troubleshooting.	Voltage range, 1 kilovolt to at least 4 kilovolts.
General Radio W8MT3VM	Metered variable autotransformer	Vary the power input source for regulation check over the 100 V to 132 V range.	Input voltage, 116 V;Output voltage, 100 V to 132 V. Metered output.

[1] Requires a TM 500 series mainframe/power module.

Table 2-2. Consumable Materials List

Nomenclature	Material	Specification Number	Part Number
Grease, insulation	Silicone compound	MIL-S-8660B	NSN6850-00-880-7616
Lubricant	Silicone compound	MIL-S-8660B	NSN6850-00-880-7616
Mild detergent			NSN6850-00-570-9360-or part GC8666 (vender code 80112)
Contact cleaner	Isopropyl alcohol	MIL-C-81302	NSN6850-00-105-3084

2-4. RACKMOUNTING ACCESSORY. Some instruments may be used in applications where rack mounting is useful. A 465M/USM-425(V)1 Rack Adapter (Cradle Mount) kit is available as Tektronix part 040-0825-00. Installation instructions are provided with the kit.

For Service Manuals Contact
MAURITRON TECHNICAL SERVICES
8 Cherry Tree Rd, Chinnor
Oxon OX9 4QY
Tel:- 01844-351694 Fax:- 01844-352554
Email:- enquiries@mauritron.co.uk

SECTION III
PREPARATION FOR USE AND SHIPMENT

3.1 PREPARATION FOR USE

WARNING

Read the Safety Summary page in the front part of this manual before using the instrument.

a. Unpacking the Instrument. No special unpacking procedures are required.

b. Initial Inspection. This instrument was inspected and adjusted before shipment. Upon receipt, inspect for physical damage and missing accessories. The accessories, which are shown in Figure 8-2 are stored in the front cover.

c. Faceplate Filter Installation. The instrument was shipped with either a clear filter (faceplate protector) or blue filter installed. The blue filter is used to reduce light reflections and increase display contrast under high ambient light conditions. To exchange the filters refer to Figure 3-1.

d. Carrying Handle Positioning. The instrument handle can be positioned for carrying or as a tilt stand. There are several detent positions provided for convenient carrying or viewing. The instrument may also be set on its rear-panel feet for operation or storage. To position the handle (see CAUTION below), press in at both pivot points (see Figure 3-2) and position the handle to the desired position, then release the pivot points.

CAUTION

When positioning the handle as a tilt stand, be sure it is locked into a detent before letting the handle support the instrument. Otherwise, the tilt stand may collapse causing instrument damage.

e. Operating Voltage Selection. The instrument will operate from either a 116 volt ac or 232 volt ac nominal line voltage source with ranges as indicated on the rear panel. Source selection is made with the LINE RANGE Selector on the rear panel (see Figure 3-3).

CAUTION

This instrument may be damaged if operated with the LINE RANGE Selector set to the incorrect position.

Before operating the instrument, perform the following line range selection and fuse verification procedures:

WARNING

To prevent electrical shock hazards when changing line voltage ranges or checking fuses, disconnect the power cord from the power source.

(1). Disconnect the instrument from the power source.

(2). Using a small blade screwdriver or other small blunt item (similar to a dull pencil), slide the LINE RANGE Selector up or down to the desired position (see Figure 3-3.)

(3). Change the line cord plug to match the power source receptacle or use a 116 to 232 volt adapter.

(4). Change the line fuse to the correct value. The correct fuse value for 116 volt operation is 1 A/250 volt, and for 232 volt operation is 0.5 A/250 volt.

f. Power Cord Information. This instrument has a detachable three wire power cord with a polarized plug for connection to the power source. The grounding terminal is directly connected to the instrument chassis. When not being used, the power cord may be removed and placed in the front cover.

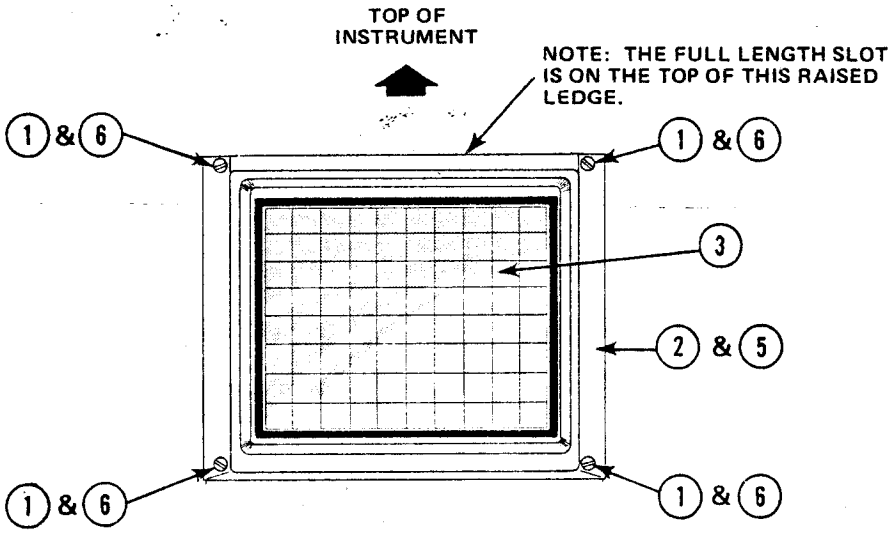

REMOVAL INSTRUCTIONS

1. UNSCREW FOUR CORNER THUMBSCREWS (DO NOT UNSCREW COMPLETELY OUT OF PLASTIC IMPLOSION RETAINER).
2. PULL IMPLOSION RETAINER WITH FILTER FORWARD AWAY FROM CRT FACEPLATE.
3. REMOVE FILTER BY LIFTING IT OUT OF THE IMPLOSION RETAINER.

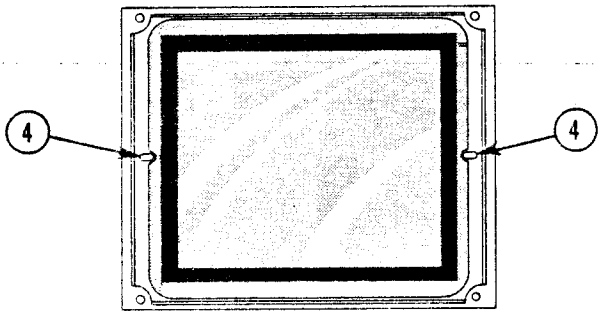

For Service Manuals Contact
MAURITRON TECHNICAL SERVICES
8 Cherry Tree Rd, Chinnor
Oxon OX9 4QY
Tel:- 01844-351694 Fax:- 01844-352554
Email:- enquiries@mauritron.co.uk

INSTALLATION INSTRUCTIONS

4. INSTALL FILTER IN NOTCHES ON IMPLOSION RETAINER WITH THE BLACK MASK AWAY FROM THE CRT.
5. POSITION IMPLOSION RETAINER ON CRT FACEPLATE SO FULL LENGTH SLOT IS TOWARD THE TOP OF THE INSTRUMENT.
6. SCREW IN THE FOUR CORNER THUMBSCREWS.

2237-2A

Figure 3-1. Removal and installation of faceplate filters.

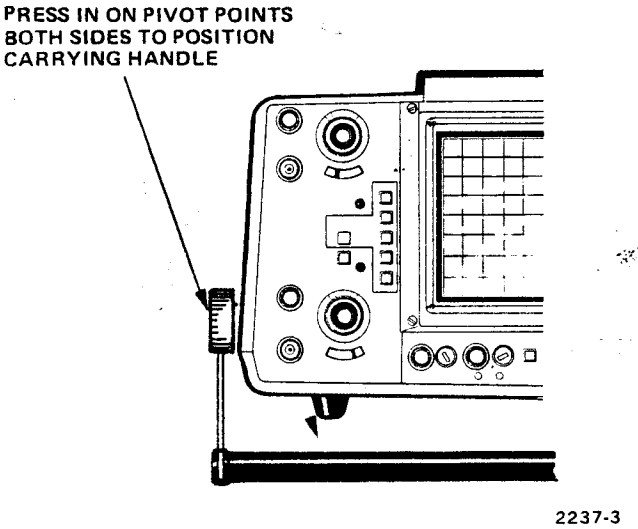

Figure 3-2. Carrying handle positioning.

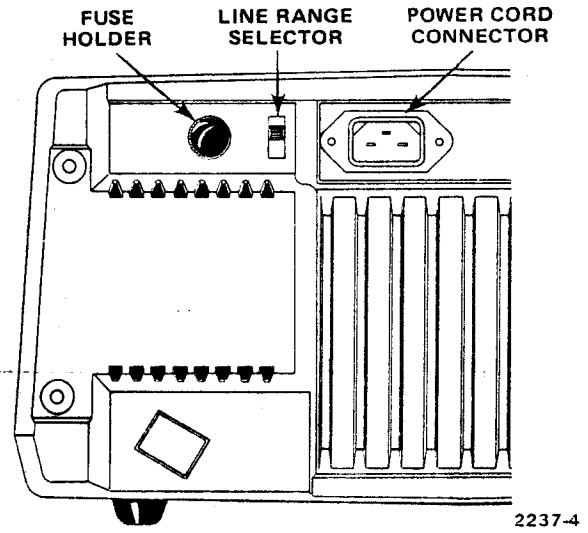

Figure 3-3. Power section of rear panel.

WARNING

This instrument is intended to be operated from a single phase power source. Operation from other power sources such as phase-to-phase on a three wire system is not recommended.

3-2. OPERATING TEMPERATURE. This instrument is cooled by natural convection; therefore, adequate clearance (at least one inch) should be maintained around the case. The clearance provided by the feet on the rear panel must be maintained to prevent power supply overheating. A thermal cutout inside the instrument provides overheating protection and disconnects power if the internal temperature exceeds a safe operating level. Power is automatically restored when the internal temperature returns to a safe operating level.

CAUTION

To prevent damage to the instrument when it continually shuts down due to overheating, it should be turned-off and referred to maintenance personnel.

3-3. PREPARATION FOR SHIPMENT. For shipment of the instrument, refer to the current edition of MIL-P-116 and MIL-STD-794 for preservation and packaging instructions and methods.

SECTION IV
OPERATION INSTRUCTIONS

4-1. THEORY OF OPERATION. The following discussion describes the operation of the oscilloscope circuitry. First a general description of the overall relationship between the basic circuits is given. Then each circuit is described in detail.

4-2. BASIC CIRCUIT FUNCTIONS. The overall relationship between the basic circuits is described below. Refer to the basic block diagram shown in Figure 4-1 to aid in understanding the discussion.

a. Vertical Module. The Vertical Module contains the CH 1 and CH 2 Input, CH 1 and CH 2 Preamplifier and Vertical Switching Hybrid Integrated Circuit, Vertical Switching Control Circuit, Delay Line Driver and Delay Line, and the Vertical Amplifier (see Figure 4-1).

(1) CH 1 and CH 2 Input. The Input circuits provide input coupling and attenuation for the signals connected to the CH 1 and CH 2 input connectors. AC, DC, and GND coupling modes are provided. Two attenuators in each channel provides attenuation factors of 10:1, 100:1, or when switched in series 1000:1.

(2) CH 1 and CH 2 Preamplifier and Vertical Switching. U4160 is a hybrid integrated circuit which contains the Vertical Switching circuitry and both the CH 1 and CH 2 Preamplifiers.

(a) The signal from the vertical input attenuators is applied to U4160, amplified, and supplied to the Delay Line Driver. In conjunction with the input attenuators, the gain of the preamplifiers is changed to provide the deflection factors indicated by the VOLTS/DIV switches. A sample of the signals present in the amplifiers is supplied to the Trigger Switching and Trigger Input Amplifiers in the Horizontal Module.

(b) The Vertical Switching circuitry selects which preamplifier will supply the signal to the Delay Line Driver.

(3). Vertical Switching Control. Inputs to this circuit are from the VERT MODE switch and from the Sweep Control circuit (alternate sync pulse). The output is supplied to U4160 to control Vertical Switching.

(4) Delay Line Driver and Delay Line. The vertical signal from the CH 1 and CH 2 Preamplifiers is amplified by the Delay Line Driver and supplied to the Delay Line. The Delay Line delays the vertical signal enough so the portion of the vertical signal initiating the sweep can be viewed.

(5) Vertical Amplifier. This circuit amplifies the signal from the Delay Line. The amplified signal is used to drive the vertical deflection plates of the crt.

b. Horizontal Module. The Horizontal Module contains Trigger Input Amplifiers and Trigger Switching, A Trigger Generator, B Trigger Generator, A Sweep Generator, B Sweep Generator, Horizontal Preamplifier, +A GATE OUT Amplifier, +B GATE Buffer, and Sweep Control (see Figure 4-1).

(1) Trigger Input Amplifiers and Trigger Switching. The Trigger Input Amplifiers are buffer amplifiers between the Trigger Generators and the source of the trigger signal. Trigger Switching selects the source of the signal used to trigger the Sweep Generator(s) and selects the method of coupling this signal to the Trigger Generator(s).

(2) A Trigger Generator. Using a signal selected by the A Trigger SOURCE switch, the A Trigger Generator produces a pulse which causes the A Sweep Generator to produce an A sweep ramp.

(3) B Trigger Generator. Using a signal selected by the B Trigger SOURCE switch, the B Trigger Generator produces a pulse which causes the B Sweep Generator to produce a B sweep ramp.

(4) A Sweep Generator. The A Sweep Generator, when initiated by the A Trigger Generator, produces a linear sawtooth output signal. The slope of the sawtooth is controlled by the A TIME/DIV switch.

(5) B Sweep Generator. The B Sweep Generator is basically the same as the A Sweep Generator. However, it produces a sawtooth output signal only after a delay time selected by the A TIME/DIV switch and the DELAY TIME POS control. When the B Trigger SOURCE switch is in the STARTS AFTER DELAY position, the B Sweep Generator begins to produce a sawtooth immediately following the selected delay time. In the other positions of the B Trigger SOURCE switch, the B Sweep Generator does not produce a sawtooth until it receives a trigger pulse occuring after the selected delay time.

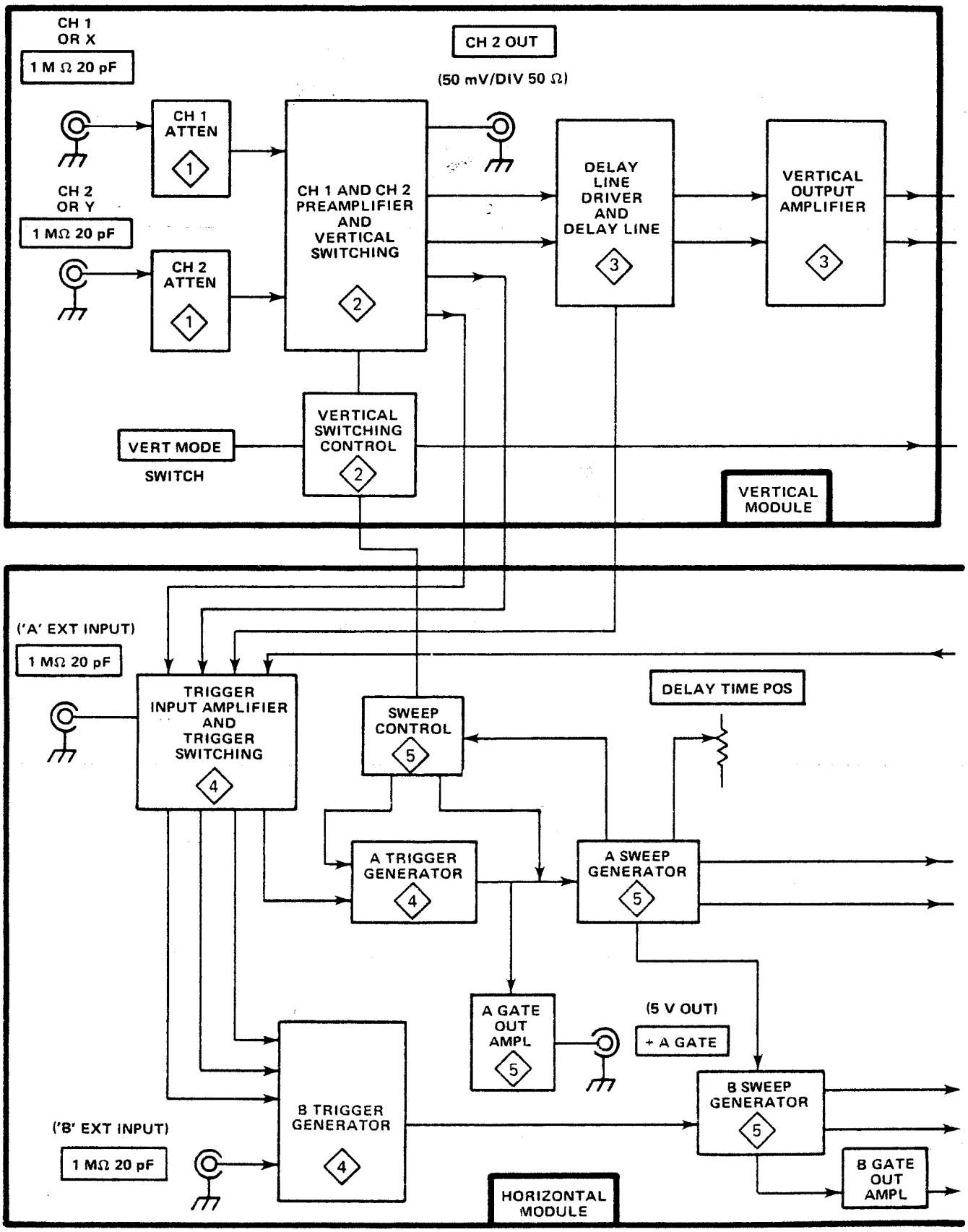

Figure 4-1. Overall block diagram (sheet 1 of 2).

2237-41

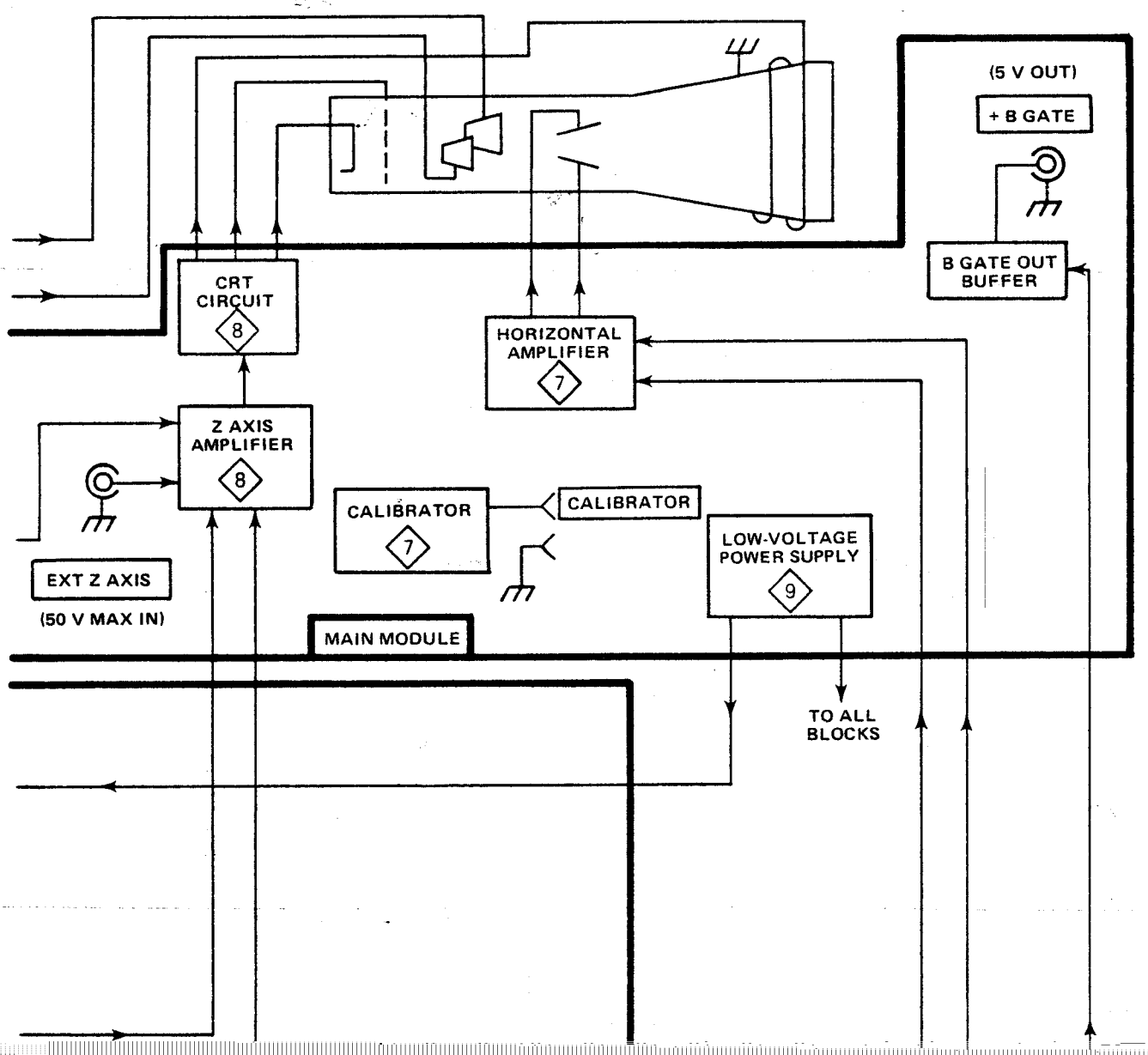
(5 V OUT)
+ B GATE
B GATE OUT BUFFER
CRT CIRCUIT
8
HORIZONTAL AMPLIFIER
7
Z AXIS AMPLIFIER
8
CALIBRATOR
7
CALIBRATOR
LOW-VOLTAGE POWER SUPPLY
9
EXT Z AXIS
(50 V MAX IN)
MAIN MODULE
TO ALL BLOCKS

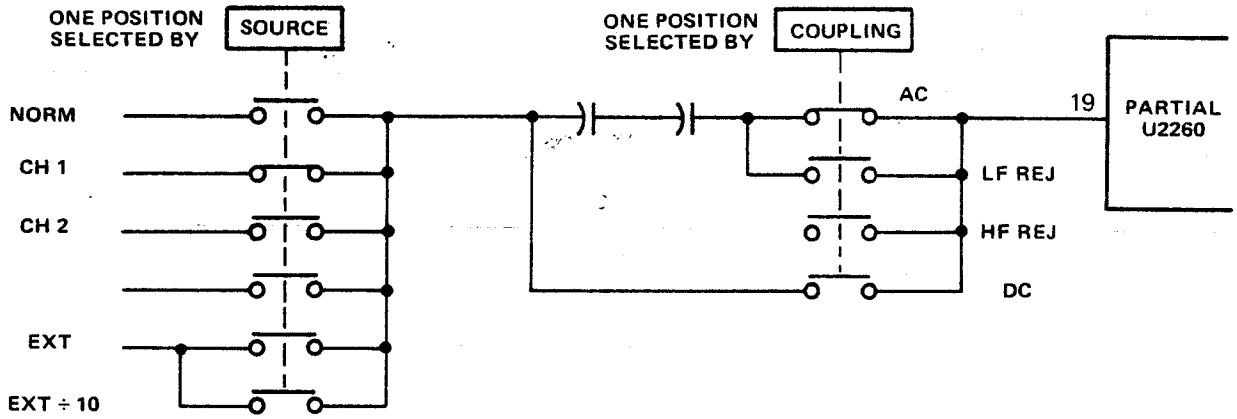

A. LOW-FREQUENCY TRIGGER SIGNAL PATH.

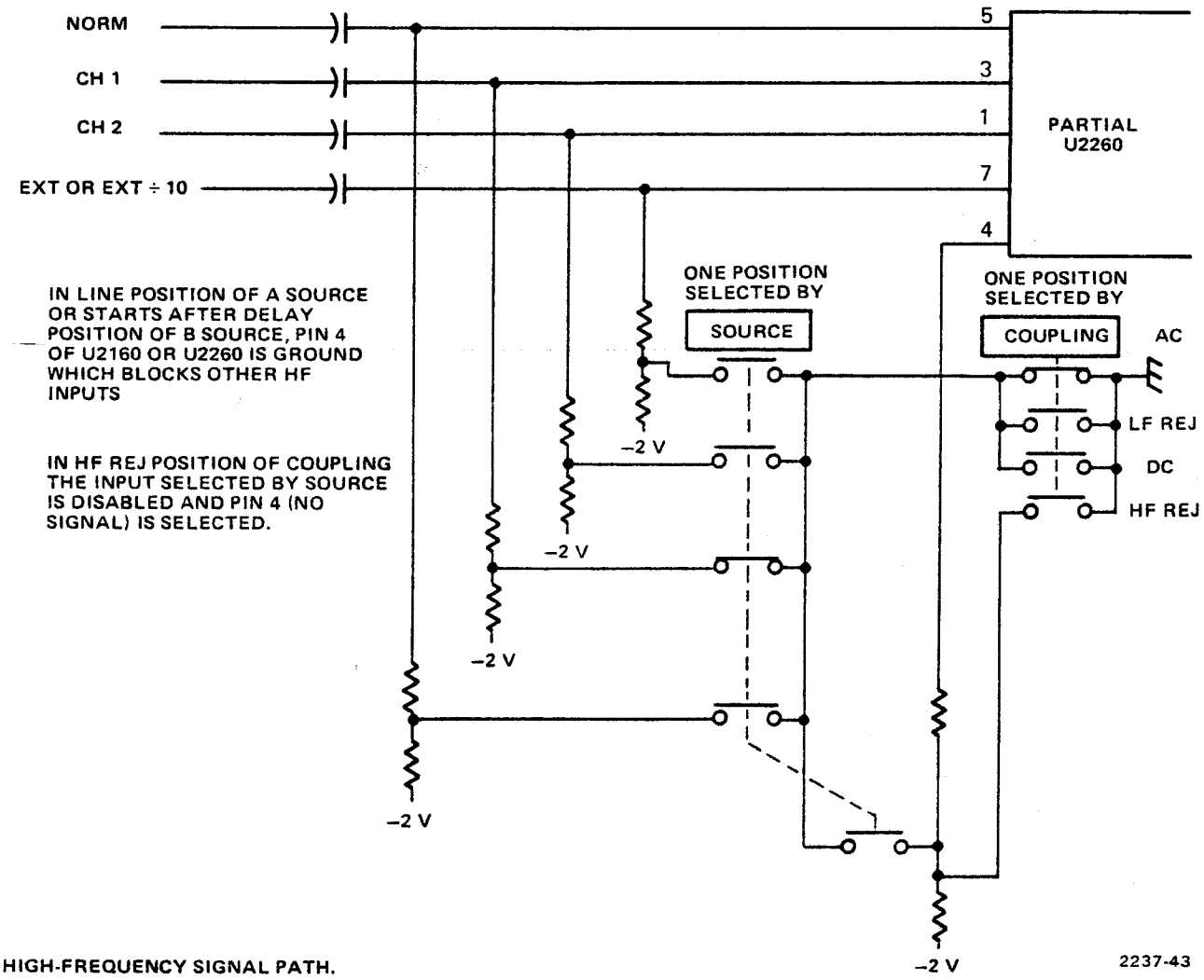

B. HIGH-FREQUENCY SIGNAL PATH.

Figure 4-3. Trigger switching.

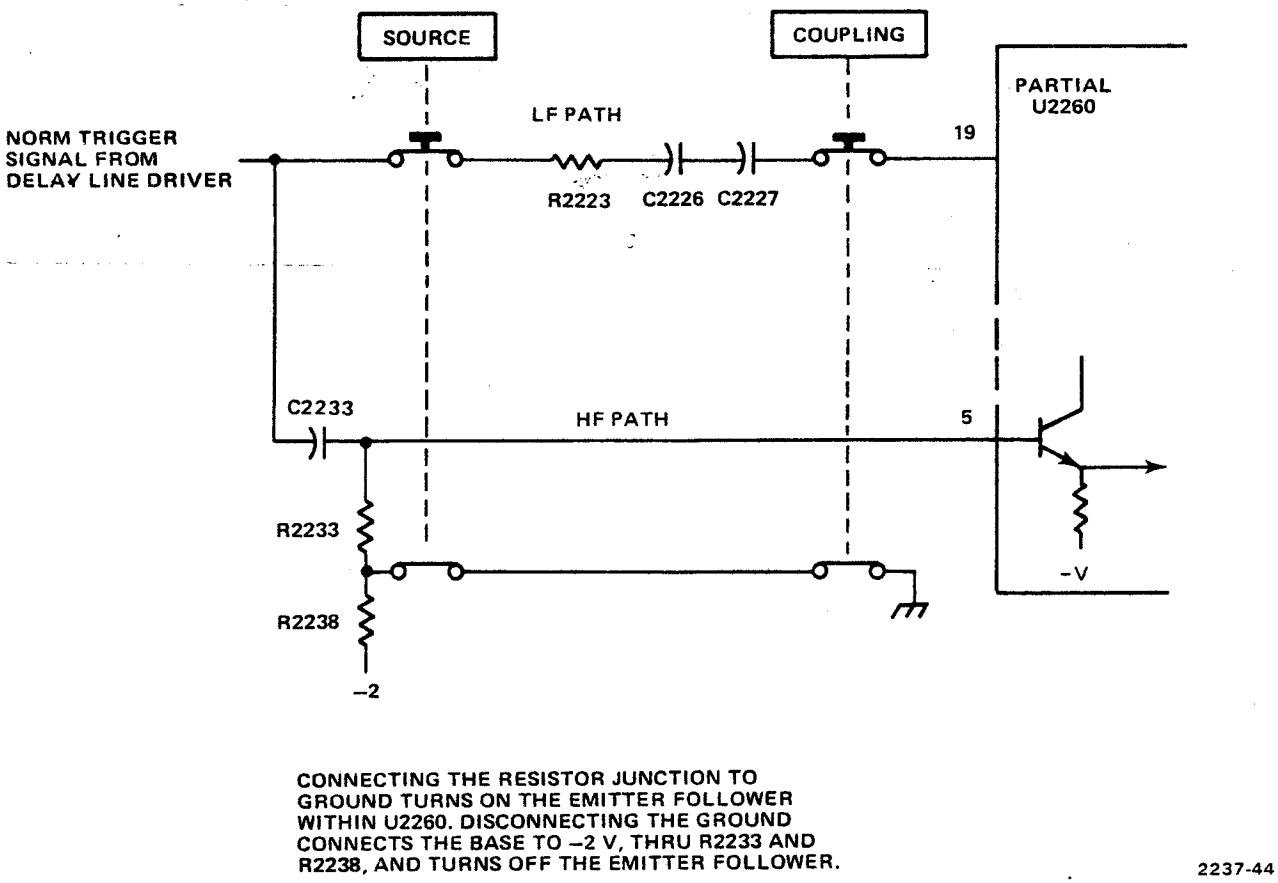

Figure 4-4. Trigger signal paths with SOURCE set to NORM and COUPLING set to AC.

2 **At the End of Holdoff.** At the end of holdoff, pin 17 of U2260 steps LO causing point H to step HI. There are now two possibilities depending on the state of the signal at point A. If the trigger input signal at point A is above the 3.55 volt threshold at the end of holdoff, no further changes will occur at this time. The HI at point K will continue to hold pin 14 LO. If the trigger input signal at point A is below the 3.55 volt threshold at the end of holdoff (or the first time after the end of holdoff the trigger input signal falls below the 3.55 volt threshold), point D goes LO setting point F HI. This sets the arm latch causing point K to go LO. With point K LO, the sweep gate latch will be allowed to change states.

3 **After the Arm Latch Sets.** After the arm latch sets, the first voltage at point A that is more positive than the 3.65 volt threshold, causes point B to go HI. This causes the output of the sweep gate latch (pin 14 of U2260) to go HI. The HI on pin 14 causes the A Sweep Generator to begin generating a sweep ramp.

4 **Beginning of Holdoff.** At the end of A Sweep time, the holdoff gate at pin 17 of U2260 steps HI. This causes point H to step LO. Point I is set to LO whenever the sweep gate (at pin 14) is HI. With points H and I both LO, point J momentarily steps HI. This resets the arm latch causing point K to go HI. When point K goes HI, the sweep gate goes LO and point I goes HI setting point J LO. The holdoff condition described in paragraph 4-3. b. (2) (a) 1 is restored.

(b) Slope Selection. The slope of the trigger input signal, on which a sweep gate is generated, is determined by the voltage connected to pin 8 of U2260. When the voltage is negative, the signal at point A is inverted (see Figure 4-5).

(c) LEVEL Control. The LEVEL control (R2253) shifts the dc level of the signal appearing at point A. This changes the position on the signal where the signal passes through the threshold voltage.

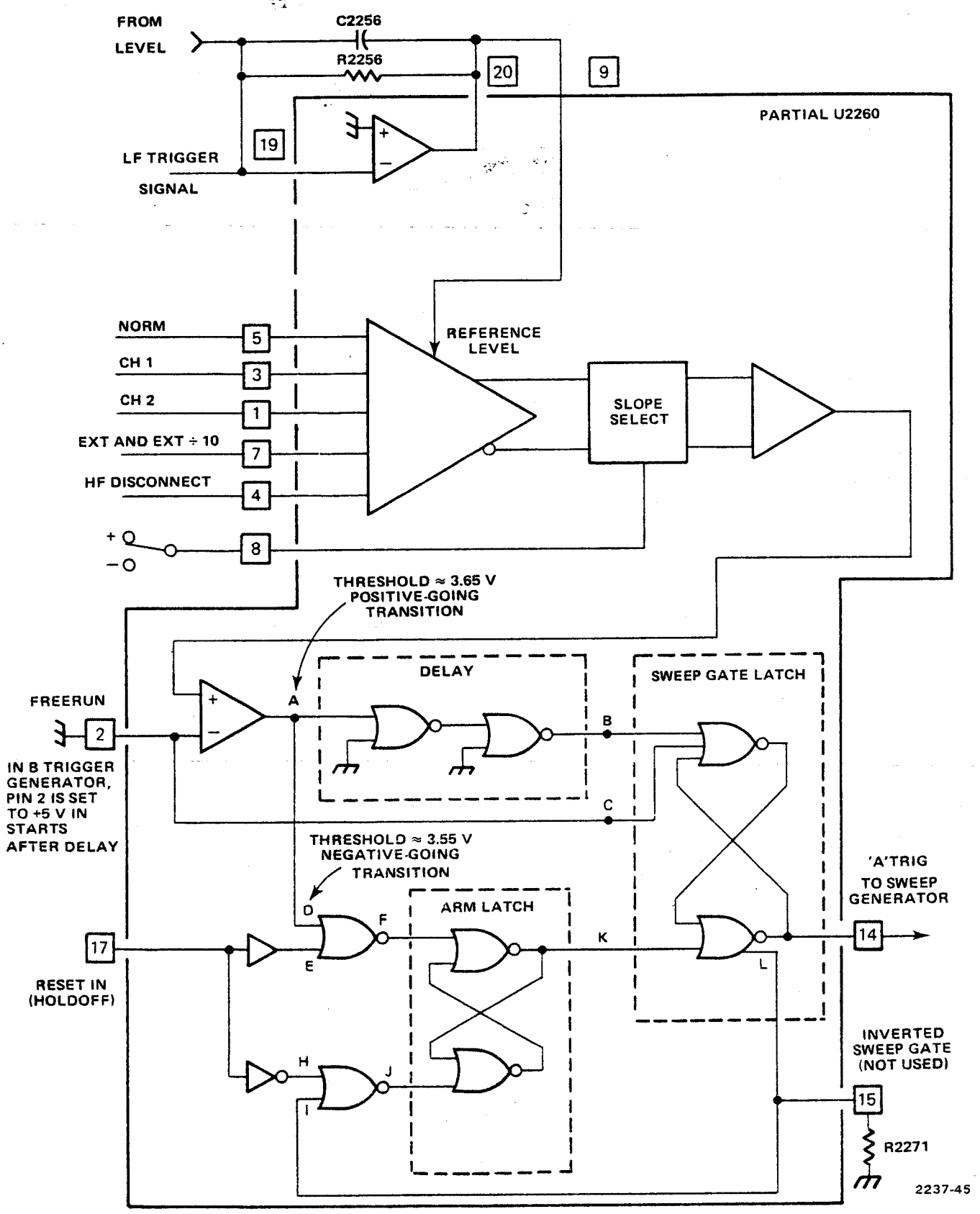

Figure 4-5. A trigger generator.

(d) Hysteresis Adjustment. The hysteresis adjustment (R2245) sets the difference in the trigger threshold and the arm threshold. The closer the levels are to each other, the more susceptible the circuit will be to triggering on noise. If the levels are too far apart, the circuit will require excessive input signal amplitude to generate a sweep gate.

(e) Trigger View Pickoff. A sample of the trigger input signal is supplied to pins 10 and 11 of U2260. This paraphase signal passes through emitter followers Q2350 and Q2356 to the TRIG VIEW switch (S4380). When the TRIG VIEW switch is pushed, the signal from the Delay Line Driver is disconnected from the Delay Line and the trigger view signal is connected in its place.

(3) B Trigger Generator. The B Trigger Generator operates in the same manner as the A Trigger Generator except in the STARTS AFTER DELAY position of the HORIZ DISPLAY switch. In the STARTS AFTER DELAY mode, +5 volts is connected to pin 2 of U2160 through S2100 and S2650 (see Figure 4-5). This disconnects the trigger signal from point B, sets point D LO, and sets point C HI. At the end of holdoff, point E goes LO causing point F to go HI. This sets point K LO and, because of the HI always present on point C, causes a sweep gate to be generated.

(4) A Sweep Generator. A sweep generator consists of U2790 and associated circuitry. Diagram 5 (FO-7) shows a complete schematic diagram of the circuit. Figure 4-6 shows a simplified diagram of the circuit. Figure 4-7 shows the waveforms produced during A sweep generation.

(a) Sweep Generator Integrated Circuits. Both the A and B Sweep Generator integrated circuits (U2790 and U2690 respectively) are the same. However, the functions of some of the pins are different. The following lists the pin numbers and their functions:

1 Pin 1 is the input for the DELAY TIME POS control. This pin is only used in the A Sweep Generator. When the A ramp on pin 2 is equal to the voltage on pin 1, a delayed gate is produced at pin 16.

2 Pin 2 is the input for the ramp voltage from the output Miller circuit. This voltage is internally connected to pin 5 when pin 7 is LO.

3 Pin 3 sets internal current levels.

4 Pin 4 sets the Miller null and retrace currents for the A Sweep Generator only. This function is performed by another circuit in the B Sweep Generator.

5 Pin 5 is the sweep ramp output. The ramp at pin 5 is connected to the Horizontal Preamplifier. Pin 5 is switched on or off by the voltage on pin 7.

6 Pin 6 sets the internal current levels which, along with R2682 or R2782, determine the sweep start voltage.

7 Pin 7 controls the sweep ramp output at pin 5. When pin 7 is LO the sweep ramp at pin 2 is internally connected to pin 5. When pin 7 is HI, the sweep ramp at pin 2 is disconnected from pin 5 and pin 5 is set to −5 volts.

8 Pin 8 is the connection for the −5 volt supply.

9 Pin 9 is the ground connection.

10 In the A sweep Generator, pin 10 produces an output which initiates holdoff. In the B Sweep Generator, pin 10 produces an output which is supplied to the +B GATE OUT Amplifier in the Main Module.

11 The voltage connected to pin 11 sets the amplitude of the unblanking signal at pin 12.

12 The signal at pin 12 is supplied to the Z Axis Amplifier in the Main Module to unblank the crt. The amplitude of this signal, and therefore the brightness of the crt display, is controlled by the voltage on pin 11.

13 Pins 13 and 14 work together. A HI on either pin prevents sweep generation. Both must be LO to start sweep generation. In the A Sweep Generator, pin 13 is held LO through a resistor to ground and only pin 14 controls sweep generation. In the B Sweep Generator pin 14 goes LO when the A Sweep Generator starts but pin 13 doesn't go LO until the B Trigger Generator produces a sweep gate. In the STARTS AFTER DELAY position of the B SOURCE switch, a B sweep gate is produced as soon as pin 16 of U2790 produces a delayed gate. In other settings, a B sweep gate is produced when the first adequate trigger signal occurs after a delayed gate is produced at pin 16 of U2790.

14 Pin 14 works with pin 13. See the pin 13 discussion.

15 Pin 15 is the connection for the +5 volt supply.

16 Pin 16 of the A Sweep Generator produces a delayed gate to remove the holdoff condition from the B Trigger Generator. This output is produced when the A ramp voltage on pin 2 reaches the dc level on pin 1.

(b) Sequence of Events During A Sweep Generation.

1 **Quiescent Condition.** The quiescent condition exists during holdoff and after holdoff but before the A Trigger Generator produces a sweep start gate. Pin 14 of U2790 is HI. This sets point A (see Figure 4-6) HI. This causes the output of the sweep start comparator to appear as a low-impedance point. The output of the sweep start comparator supplies current through pin 4 of U2790, and through R_t, to set the inverting input of the Miller op amp to the same voltage as the non-inverting input (the sweep

For Service Manuals Contact
MAURITRON TECHNICAL SERVICES
8 Cherry Tree Rd, Chinnor
Oxon OX9 4QY
Tel:- 01844-351694 Fax:- 01844-352554
Email:- enquiries@mauritron.co.uk

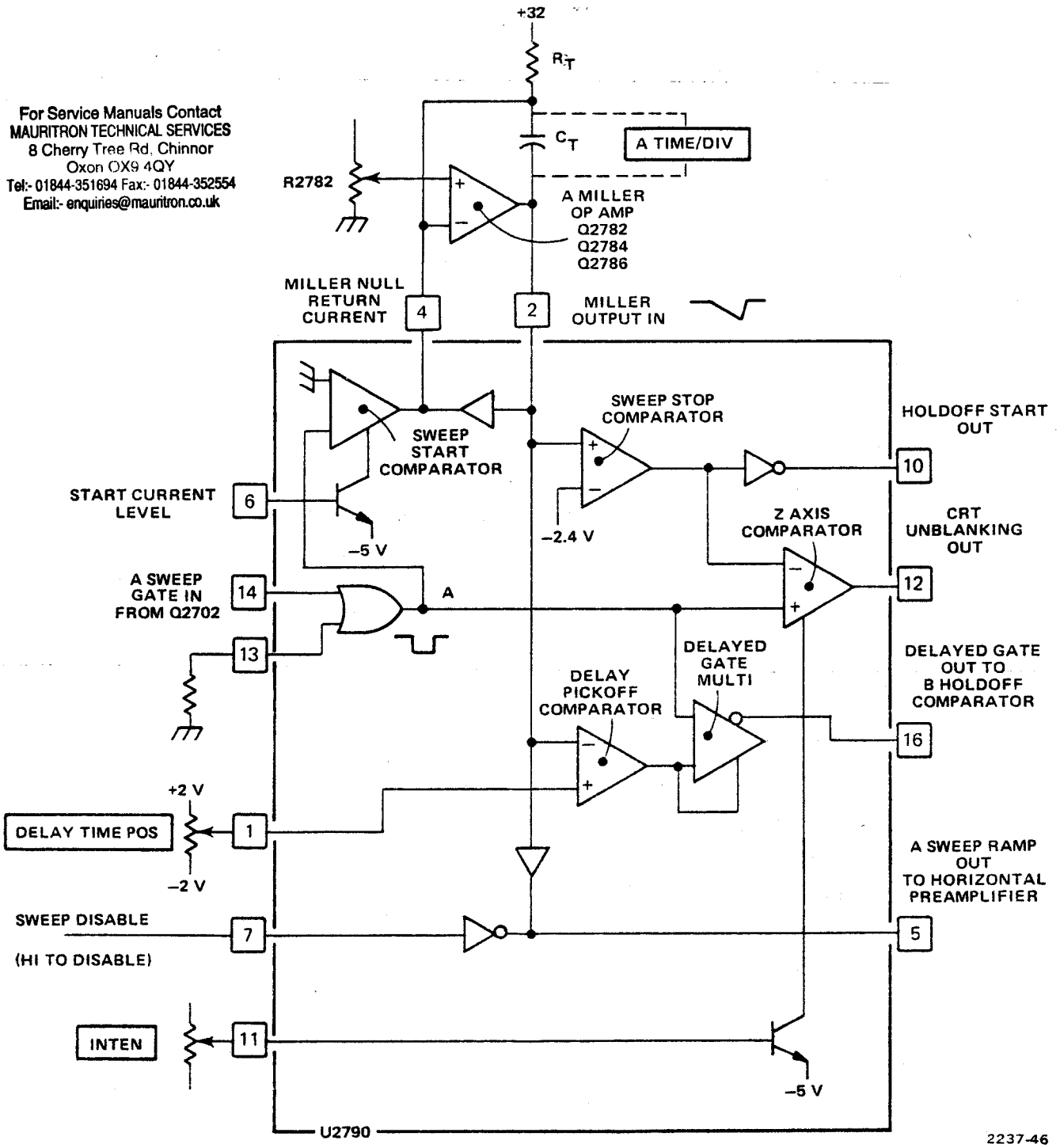

Figure 4-6. Simplified diagram of the A sweep generator.

start voltage which is set by R2782). The output of the Miller op amp sets pin 2 of U2790 to the sweep start voltage also.

2 **At Triggering.** Pin 13 is always LO, except in the X-Y mode. When pin 13 is HI, point A (see Figure 4-6) is HI regardless of the state of pin 14. When the sweep gate causes pin 14 to go LO, point A steps LO (see Figure 4-6). This causes the output of the sweep start comparator to become a high-impedance point. The timing capacitor (C_t) starts charging through the timing resistor (R_t).

3 **During Ramp Generation.** As C_t starts charging through R_t, the inverting input of the Miller op amp tries to go more positive. This causes the output of the Miller op amp to go less positive which supplies current through C_t and R_t to hold the voltage on the inverting input constant. Since the resulting voltage across R_t is constant, the current through R_t and C_t must also be constant. Charging C_t with this constant current produces a linear negative-going voltage ramp at pin 2 of U2790. The slope of the ramp is determined by the values of R_t and C_t which are selected by the A TIME/DIV switch (S3100). The ramp at pin 2 is internally connected to pin 5 of U2790 whenever pin 7 is LO. Pin 7 is HI in the MIXED and B DLY'D positions of the HORIZ DISPLAY switch and LO in the A and A INTEN positions of the HORIZ DISPLAY switch and in the X-Y mode.

4 **At Delayed Gate Generaton.** The negative-going ramp at pin 2 of U2790 is internally connected to a comparator. The ramp is compared to the dc voltage on pin 1 of U2790 (set by the DELAY TIME POS control). When the ramp voltage is the same as the voltage on pin 1, the comparator triggers the delayed gate multivibrator supplying a negative-going gate pulse to pin 16 of U2790. This gate is connected to the B holdoff comparator (Q2672 and Q2674) and terminates B holdoff. The negative-going gate from pin 16 of U2790 is also connected to the base of Q2622 through CR2608, CR2617, CR2618, and CR2622. This allows the B sweep gate, from the B trigger amplifier (Q2602 and Q2604), to start B sweep generation. Both signals must be LO at the same time to start B sweep.

5 **Sweep End.** The ramp on pin 2 of U2790 is internally connected to the sweep stop comparator. When the ramp reaches −2.4 volts, the comparator switches supplying a positive-going pulse to pin 10 of U2790. This pulse is supplied to the Sweep Control circuit and initiates A holdoff. At the beginning of holdoff, the sweep gate causes pin 14 of U2790 to step HI causing pin 4 to again appear as a low-impedance point. The current through R_t is now supplied by pin 4 of U2790. Also, when pin 14 of U2790 steps HI, it causes pin 12 to step HI and initiate B holdoff.

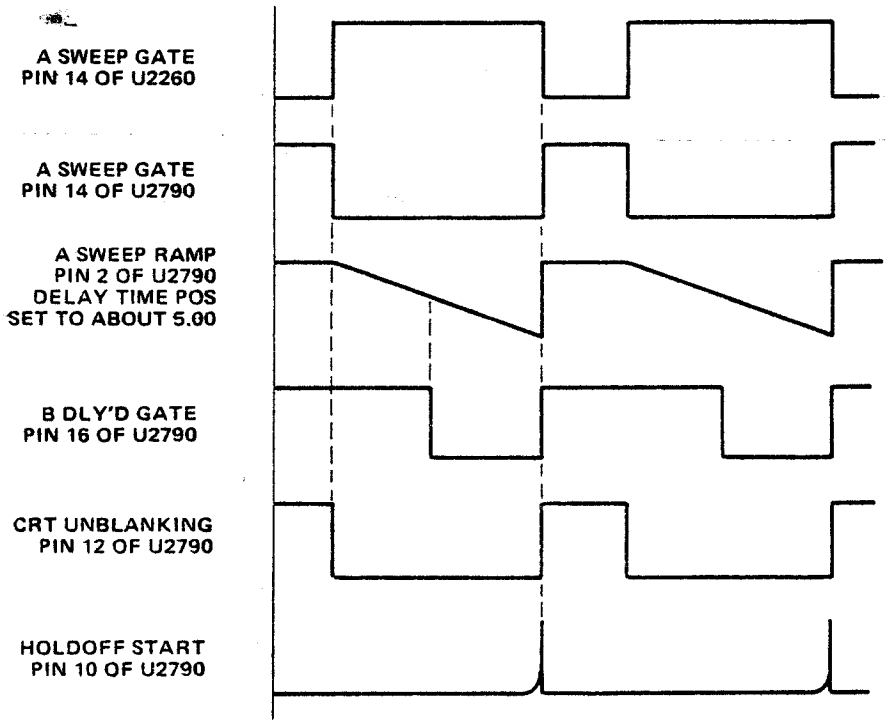

2237-47

Figure 4-7. Waveforms produced during A sweep operation.

6 **Retrace.** At the beginning of holdoff, the output of the Miller op amp and pin 2 of U2790 are at about −2.4 volts. This voltage is supplied to the input of a non-inverting amplifier within U2790. This amplifier tries to pull pin 4 of U2780, and the inverting input of the Miller op amp, less positive. To compensate, the output of the Miller op amp rapidly goes positive discharging C_t. The resulting positive-going ramp provides retrace.

(5) B Sweep Generator. The B Sweep Generator consists of U2690 and associated circuitry. The B Sweep Generator integrated circuit (U2690) is the same as the A Sweep Generator integrated circuit (U2790). Both are discussed in paragraph 4-3. b. (4) (a). Figure 4-8 shows a simplified diagram of the B Sweep Generator. Figure 4-9 shows the waveforms produced during B sweep generation. Figure FO-6 shows a complete schematic diagram of the B Sweep Generator.

(a) Sequence of Events During B Sweep Generation in B DLY'D or A INTEN Mode. Refer to Figure 4-8 and Figure 4-9 during the following discussion. Diagram 5 (FO-7) shows a complete schematic diagram of the B Sweep Generator.

1 **Before B Delayed Gate Generation.** In the B DLY'D or A INTEN modes, the base of Q6236 is set to about +2 volts through the HORIZ DISPLAY switch (S2650). The following conditions exist before the generation of a B delayed gate at pin 16 of U2790. The B trigger amplifier (Q2602 and Q2604) supplies a HI to the base of Q2622 which biases off Q2622. The B sweep start voltage (about +2 volts from pin 2 of U2690) is applied to the base of Q2632. Bias resistors set the base of Q2636 to about +2 volts also. Ideally Q2632 and Q2636 Will conduct equally. The emitter of Q2624 is connected to the collector of Q2636 which forward biases Q2624. The collector of Q2624 pulls the emitter of Q2620 negative enough (through CR2621) to turn on Q2620. Transistor Q2620 supplies current through R_t to hold the inverting input of the B Miller op amp at the same voltage as its non-inverting input (set by R2682).

2 **At B Delayed Gate Generation.** When the A Sweep Generator generates a B delayed gate (at pin 16 of U2790), the resulting negative step on the base of Q2672, causes the B holdoff comparator (Q2672 and Q2674) to switch states and remove B holdoff from the B Trigger generator.

3 **At B Sweep Gate Generation.** When a B sweep gate is generated by the B Trigger Generator, the B trigger amplifier (Q2602 and Q2604) switches, which pulls the base of Q2622 negative. Transistor Q2622 turns on, pulling the emitter of Q2620 less negative. This turns off Q2620. This begins generation of a B ramp. When the B ramp (at pin 2 of U2690) begins going less positive, it turns off Q2636. The emitter of Q2624 is now connected to −5 volts through R2638. Transistor Q2624 remains on, supplying the collector current for Q2622.

4 **During B Ramp Generation.** When Q2620 turns off, C_t begins charging through R_t. As C_t charges, the inverting input of the B Miller op amp tries to go more positive. To compensate, the output of the B Miller op amp supplies current through C_t and R_t to hold the inverting input at the same voltage as the non-inverting input (set by R2682). Since the resulting voltage across R_t is constant, the current through R_t and C_t is constant. Charging C_t with this constant current produces a linear negative-going ramp at pin 2 of U2690. The slope of the ramp is determined by the values of R_t and C_t which are selected by the B TIME/DIV switch (S3200). The ramp at pin 2 of U2690 is internally connected to pin 5 whenever pin 7 is LO. Pin 7 is LO in the B DLY'D mode and HI in the A INTEN mode. The B Sweep Generator does not provide horizontal deflection in the A INTEN mode, it only supplies additional unblanking current to intensify the display during the time a B sweep ramp is being generated.

5 **Sweep Stop.** When the ramp at pin 2 of U2690 reaches about −2.4 volts, the emitter of Q2629 becomes sufficiently negative to forward bias Q2629. When Q2629 turns on its collector becomes sufficiently negative to turn on Q2620. The resulting current through Q2620 flows through R_t and holds the inverting input of the B Miller op amp at the same voltage as the non-inverting input. The B Miller op amp no longer supplies current to C_t and the voltage on pin 2 of U2690 remains at about −2.4 volts. The B Sweep Generator does not reset at this time. If it did reset, it might be possible to trigger and generate another B sweep ramp before A sweep ends. This would produce an erroneous display. The gate at pin 10 of U2690 does not initiate B holdoff, it only supplies a signal to the +B GATE OUT Amplifier in the Main Module.

6 **Retrace.** At the end of a sweep, the holdoff gate from the Sweep Control circuit resets both the A and B Trigger Generators. When the B Trigger Generator resets, the B trigger amplifier (Q2602 and Q2604) switches and pulls the base of Q2622 HI. This turns off Q2622. When Q2622 turns off, it allows the collector of Q2629 to pull the emitter of Q2620 more negative which increases the forward bias on Q2620. The increased forward bias on Q2620 tries to increase the current through R_t and force the inverting input of the B Miller op amp less positive. To compensate, the output of the B Miller op amp rapidly goes positive, discharging C_t. The resulting positive-going ramp on pin 2 of U2690 provides retrace.

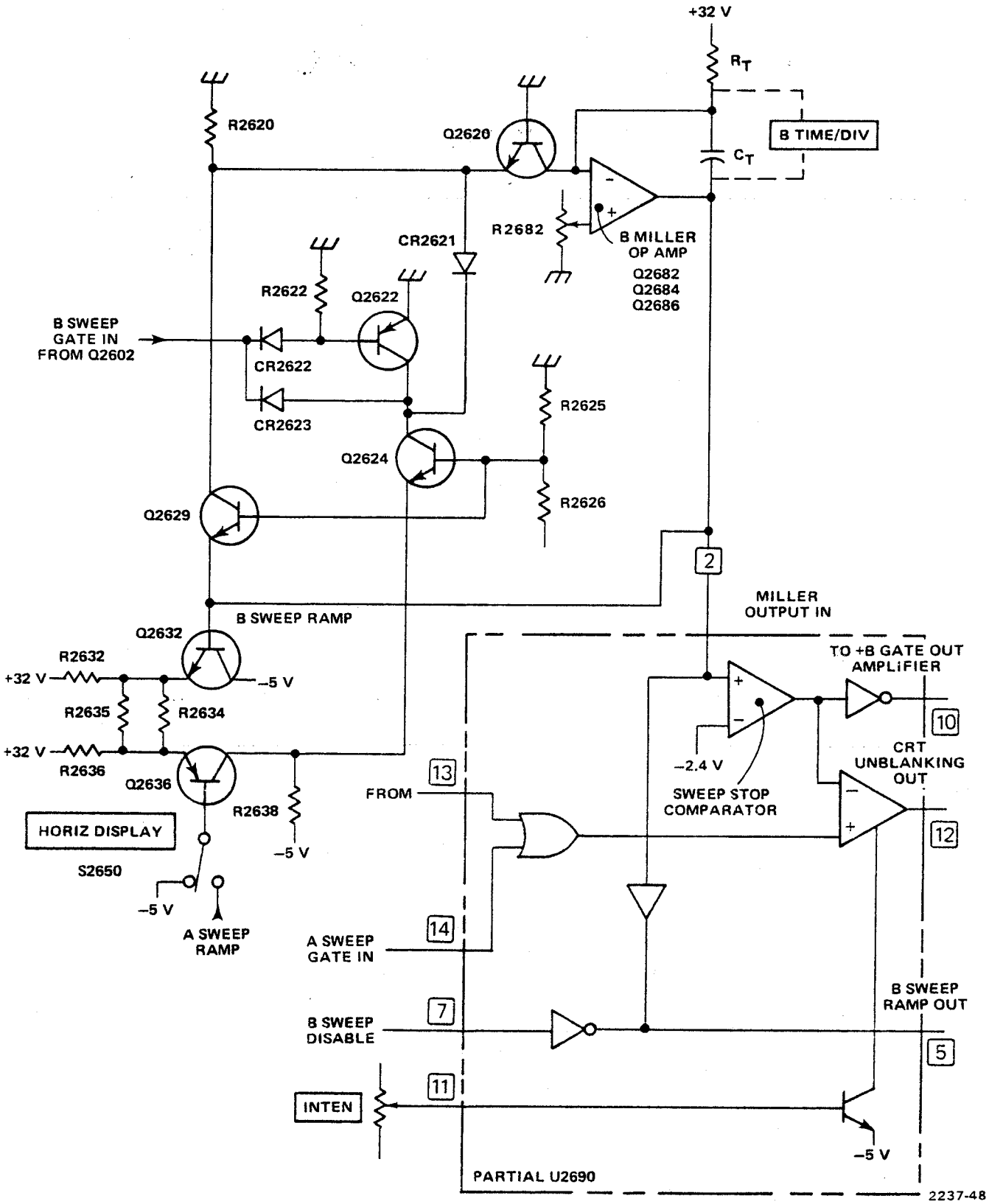

Figure 4-8. Simplified diagram of the B sweep generator.

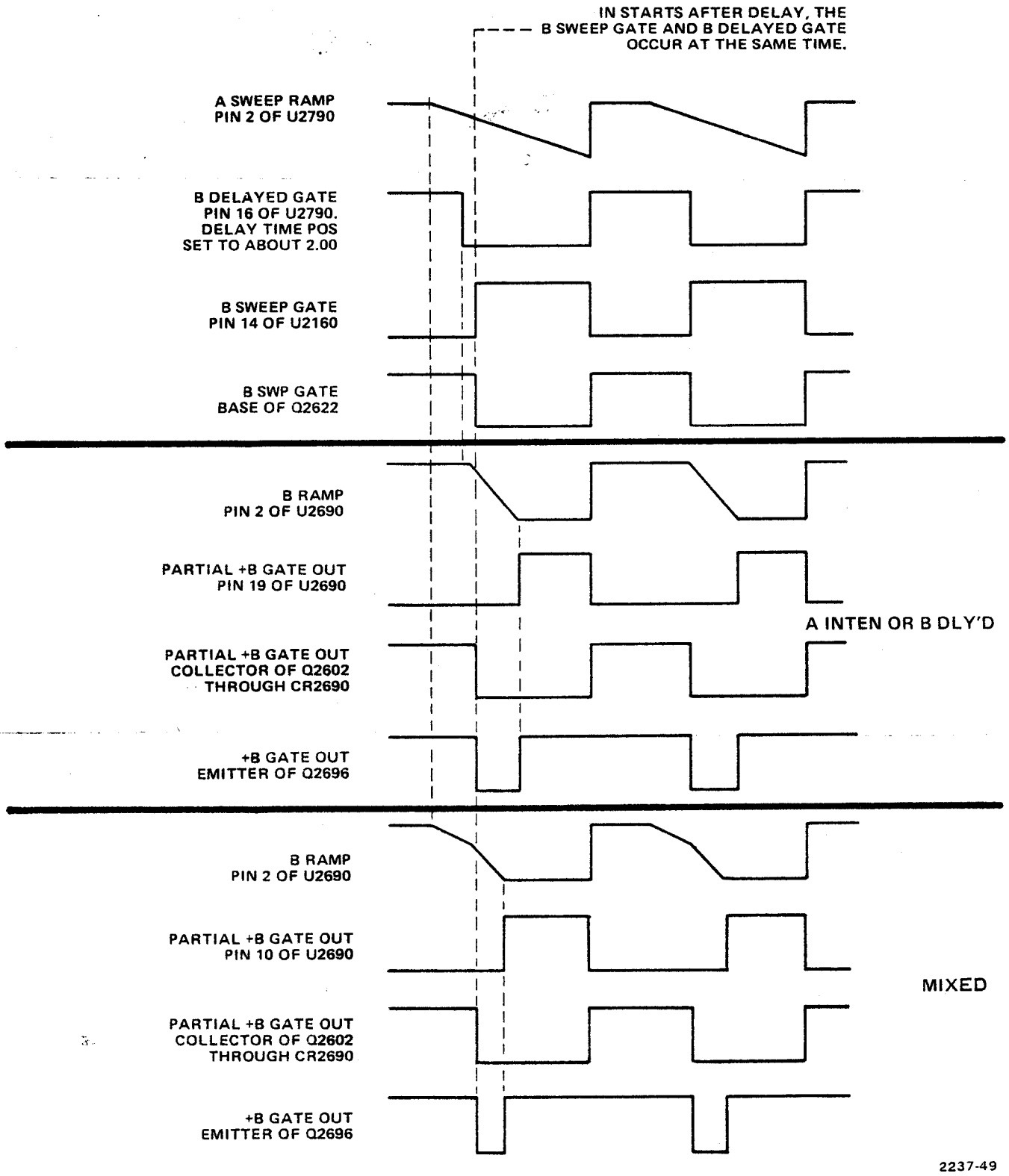

Figure 4-9. Waveforms produced during B sweep generation

7 **End of Retrace.** When the retrace ramp on pin 2 of U2690 reaches about +2 volts, the emitter of Q2636 (through the emitter of Q2632) is pulled sufficiently positive to forward bias Q2636. At the same time, the emitter of Q2629 becomes sufficiently positive to turn off Q2629. The initial condition (before B delayed gate generation) is restored. The collector of Q2636 goes less negative, decreasing the forward bias on Q2624. Now Q2624 supplies just enough current through Q2620 and R_t to hold the inverting and non-inverting inputs of the B Miller op amp at the same voltage.

(b) Sequence of Events During B Sweep Generation in MIXED Mode. In the MIXED mode, B sweep generation is similar to that in the A INTEN or B DLY'D modes. The main difference is that the voltage level on pin 2 of U2690 is controlled by the A sweep ramp before a B sweep gate is generated. Also, a HI is placed on pin 7 of U2790 causing pin 5 of U2790 to go LO and disconnect the A ramp from the Horizontal Preamplifier.

1 **Before A Sweep Starts.** When the MIXED button is pushed, the A sweep ramp is connected to the base of Q2636 through R2637 and R2781. Ideally the A and B sweep start voltages will be about the same, causing both Q2636 and Q2632 to conduct. The collector of Q2636 is connected to the emitter of Q2624, forward biasing Q2624. The collector of Q2624 pulls the emitter of Q2620 negative enough to forward bias Q2620. Transistor Q2620 supplies current through R_t to hold both inputs of the B Miller op amp at the same voltage. Also, a HI from the B trigger amplifier (Q2602 and Q2604) holds off Q2622.

2 **After A Sweep Starts.** When the A Sweep Generator is triggered, the negative-going A sweep ramp begins to appear at pin 2 of U2790 which is connected to the base of Q2636. As the base of Q2636 goes less positive, Q2636 turns on harder causing its collector to go less negative. The collector of Q2636 is connected to the emitter of Q2624. As the collector of Q2636 goes less negative, the forward bias on Q2624 is decreased, which decreases its collector current. Since Q2624 supplies the current through Q2620, the current through Q2620 also decreases. This causes the inverting input of the B Miller op amp to try to go more positive. To compensate, the output of the B Miller op amp supplies current through C_t and R_t to hold both inputs at the same voltage. C_t charges at a rate determined by the A sweep ramp. The resulting ramp at pin 2 of U2690 has the same slope as the A sweep ramp and is internally connected to pin 5 of U2690. This signal is connected to the Horizotal Preamplifier and provides horizontal deflection for both the A and B portions of the display.

3 **When B Sweep Gate is Generated.** When a B sweep gate is generated by the B Trigger Generator, the base of Q2622 steps negative, turning on Q2622 which turns off Q2620. B sweep generation continues as in the A INTEN or B DLY'D modes. See 4-3. b. (5) (a) 3 through 7.

(6) Horizontal Preamplifier.

(a) The Horizontal Preamplfier is contained within a single integrated circuit (U2900). The Horizontal Preamplifier amplifies the sweep ramp outputs from the A and B Sweep Generators and supplies the amplified signal to the Horizontal Amplifier in the Main Module. In the X-Y mode, the CH 1 Preamplifier output is supplied to the Horizontal Peramplifier to provide horizontal (X axis) deflection.

(b) The following lists the pin numbers of U2900 and their functions.

1 **Pin 1, Magnifier Registration.** Used in conjunction with pin 8 to adjust magnifier registration. Adjustment is correct when display does not shift horizontally when switching between normal and magnified displays.

2 **Pin 2, Sweep.** Output for the negative-going signal which is supplied to the Horizontal Amplifier in the Main Module.

3 **Pin 3, Gain.** Used in conjunction with pin 6. The resistance between pins 3 and 6 determines the amplitude of the signal at pins 2 and 7. Decreasing this resistance increases gain. The X10 Magnifier switch, when pushed, decreases this resistance by a factor of ten and therefore increases the gain by a factor of ten.

4 **Pin 4, −5 Volts.** Connection for the −5 volt supply.

5 **Pin 5, Current Source.** Sets current levels within U2900.

6 **Pin 6, Gain.** See pin 3.

7 **Pin 7, +Sweep.** Output for positive-going signal which is supplied to the Horizontal Amplifier in the Main Module.

8 **Pin 8, Magnifier Registration.** See pin 1.

9 **Pin 9, B Sweep Input.** The output of the B Sweep Generator is connected here. The more positive of the levels connected to pins 9 and 10 is internally connected to the amplifier and provides the output at pins 2 and 7. The more negative level on pins 9 and 10 is ignored.

10 **Pin 10, A Sweep Input.** The output of the A Sweep Generator is connected here. See pin 9.

11 **Pin 11, X Signal Input.** A sample of the signal present in the CH 1 Preamplifier is connected here. When pin 12 is HI, the sweep inputs from pins 9 and 10 are internally disconnected and the signal from pin 11 is amplified and connected to the outputs on pins 2 and 7.

12 **Pin 12, X-Y Control.** This pin is set HI only in the X-Y mode. See pin 11.

13 **Pin 13, Frequency Compensation.** The frequency compensating capacitor is connected here.

14 **Pin 14, Horizontal Position.** The horizontal POSITION control is connected here. Changing the dc voltage on this pin shifts the dc level of the outputs at pins 2 and 7, except in the X-Y mode.

(7) +A GATE OUT Amplifier. The +A GATE OUT Amplifier consists of Q2712 and associated circuitry. The A sweep gate signal from the collector of Q2702 (part of the A trigger amplifier) is connected to the base of Q2712. At the beginning of A sweep the sweep gate turns off Q2712, causing its collector to go to +5 volts. At the end of A sweep the sweep gate steps positive, turning on Q2712. The collector of Q2712 goes to about 0 volts. The resultant +A GATE OUT signal is about +5 volts while an A sweep ramp is being generated and about 0 volts the rest of the time.

(8) +B GATE OUT Buffer. The +B GATE OUT Buffer consists of Q2696 and associated circuitry. The input to the buffer circuit is obtained from three sources; the partial B Gate signal from pin 10 of U2690, the B sweep gate from the collector of Q2602 which is part of the B trigger amplifier, and the delayed gate signal from pin 16 of U2790. Figure 4-9 shows the time relationship of the two signals. The output of the Buffer is LO only when both input signals are LO. All three input signals are LO at the same time only while a B ramp is being generated. The output of the Buffer is supplied to the +B GATE OUT Amplifier in the Main Module.

(9) Sweep Control. Sweep Control consists of U2750 and associated circuitry. The circuit controls holdoff duration, AUTO sweep, and single sweep operation. Figure 4-10 shows a functional block diagram of U2750 and associated circuitry.

(a) Holdoff Control. Holdoff control is provided by a Miller ramp generator which consists of three transistors within U2750, and an RC network. Resistors R2776 and R2777 are the timing resistors. Capacitor C2762 and a capacitor selected by the A TIME/DIV switch are the timing capacitors. Figure 4-10 shows a functional block diagram of U2750 and associated circuitry. Figure 4-11 shows the waveforms produced by the holdoff control circuitry.

1 At the beginning of A sweep generation, pin 6 of U2750 steps LO. This LO passes through an inverting amplifier and turns on transistor C and turns off transistors D and E (see Figure 4-10). When transistors D and E turn off, pin 11 of U2750 is pulled more positive through R2762. Pin 11 is clamped at about +5.7 volts by a diode within U2750. The current through the timing resistors (R2776 and R2777) is supplied by transistor C through pin 10 of U2750. This condition is maintained until the end of A sweep generation.

2 At the end of A sweep generation, pin 12 of U2750 momentarily steps HI which sets the holdoff latch within U2750. The Q output of the holdoff latch goes HI causing pin 9 of U2750 to go HI. The HI on pin 9 resets and holds off the A Trigger Generator.

3 When the A Trigger Generator resets (or the AUTO sweep gate steps HI), pin 6 of U2750 steps HI. This turns off transistor C and turns on transistors D and E within U2750. Pin 10 is pulled positive to about +1.4 volts through R2776 and R2777.

4 After transistor C turns off, pin 10 tries to go more positive than +1.4 volts. This turns on transistor D harder and supplies current through C2762, R2776, and R2777. This current holds pin 10 at about +1.4 volts and begins charging C2762. As C2762 charges, pin 11 of U2750 begins going less positive.

5 As pin 11 of U2750 goes less positive, the diode selected by the A TIME/DIV becomes forward biased. Now the current to hold pin 10 at +1.4 volts is supplied through C2762 and a capacitor selected by the A TIME/DIV. Since the voltage across R2776 and R2777 doesn't change, the current doesn't change. Now this current must charge two capacitors, and the voltage ramp on pin 11 of U2750 will not be as steep. The ramp can also be made less steep by increasing the resistance of the A TRIGGER HOLDOFF control (R2777).

6 When the voltage on pin 11 falls to about 1 volt, the R input of the holdoff latch within U2750 is set HI through an inverting amplifier. The holdoff latch resets and its Q output goes LO. When the Q output goes LO, pin 9 of U2750 goes LO and terminates holdoff.

(b) AUTO Sweep Control. When pin 4 of U2750 is set LO by the TRIG MODE switch, Sweep Control provides a baseline trace in the absence of an adequate trigger signal. Figure 4-10 shows the Sweep Control integrated circuit and associated circuitry. Figure 4-12 shows the waveforms produced during AUTO sweep gate generation.

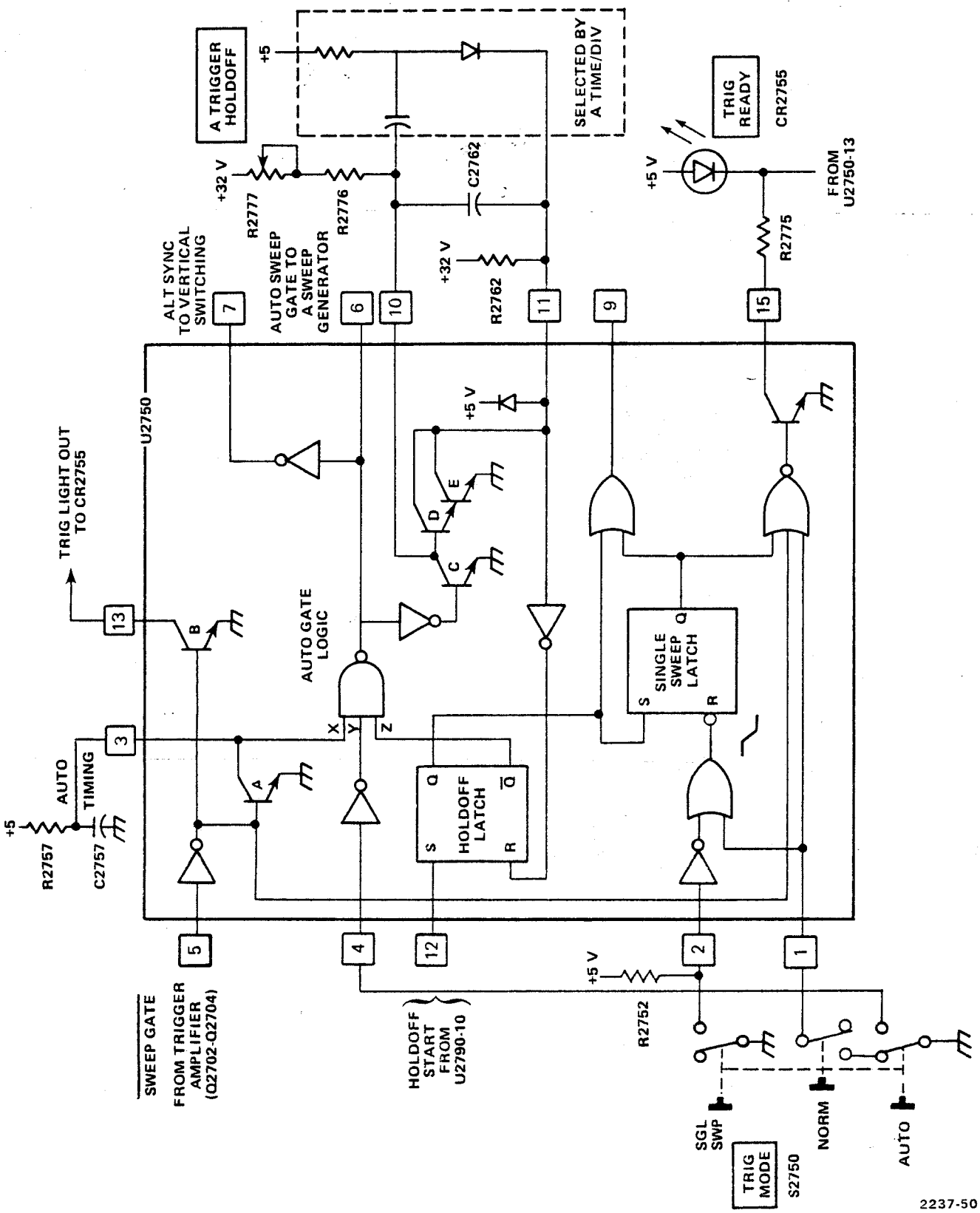

Figure 4-10. Functional block diagram of the sweep control integrated circuit and associated circuitry.

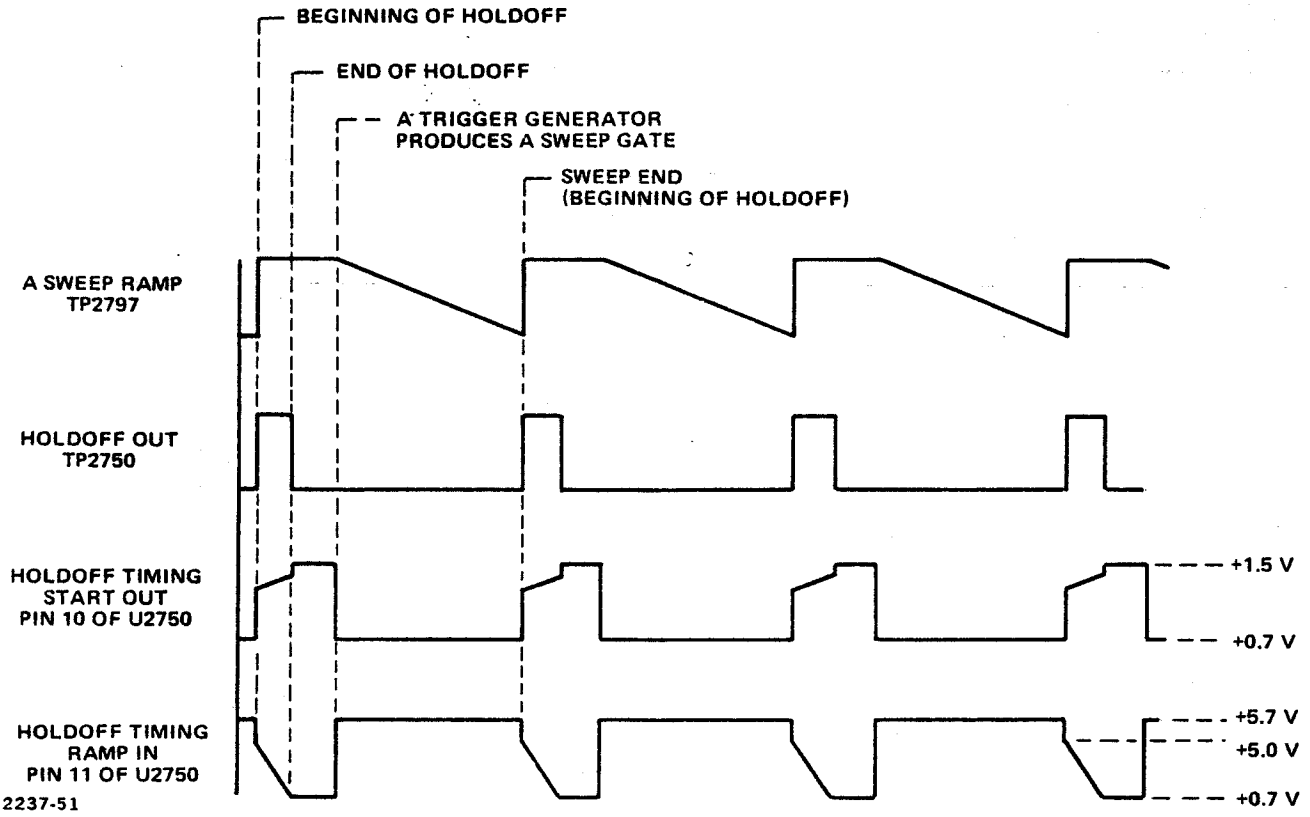

Figure 4-11. Waveforms produced by holdoff control circuitry.

1 When the TRIG MODE switch (S2750) is set to AUTO, pin 4 of U2750 is set LO. This sets input Y of the AUTO gate logic HI through an inverting amplifier within U2750 (see Figure 4-10).

2 If adequately triggered, pin 5 of U2750 steps LO at the beginning of A sweep generation. This turns on transistor A within U2750 and discharges C2757. Discharging C2757 prevents generation of an AUTO sweep gate by keeping input X of the AUTO gate logic LO.

3 Assume that the trigger signal becomes inadequate to cause the A Trigger Generator to generate an A sweep gate. At the end of the last triggered sweep, pin 12 of U2750 momentarily steps HI. This sets the holdoff latch within U2750. The $\overline{Q}$ output of the holdoff latch sets input Z of the AUTO gate logic HI.

4 When the holdoff latch sets, pin 9 of U2750 resets the A Trigger Generator causing pin 5 of U2750 to step HI. The HI on pin 5 turns off transistor A within U2750. Now C2757 starts to charge through R2757.

5 When C2757 charges sufficiently, input X of U2750 is HI. Now all three inputs of the AUTO gate logic are HI which causes an AUTO sweep gate to be generated at pin 6 of U2750.

6 At the end of the first AUTO generated sweep ramp, pin 12 of U2750 momentarily steps HI, resetting the holdoff latch. The $\overline{Q}$ output of the holdoff latch goes LO, causing the output of the AUTO gate logic to step HI. At the same time, the Q output of the holdoff latch steps HI, causing holdoff to begin (pin 9 of U2750 steps HI).

7 When holdoff ends, the R input of the holdoff latch goes HI, resetting the holdoff latch. The $\overline{Q}$ output goes HI, causing the AUTO gate at pin 6 of U2750 to step LO. This causes another AUTO sweep to be generated. As long as no adequate trigger signal is available, all subsequent sweeps will be initiated by the AUTO gate at pin 6 of U2750.

8 Assume an adequate trigger signal becomes available. When A Trigger Generator supplies an A sweep gate to pin 5 of U2750, transistor A within U2750 is turned

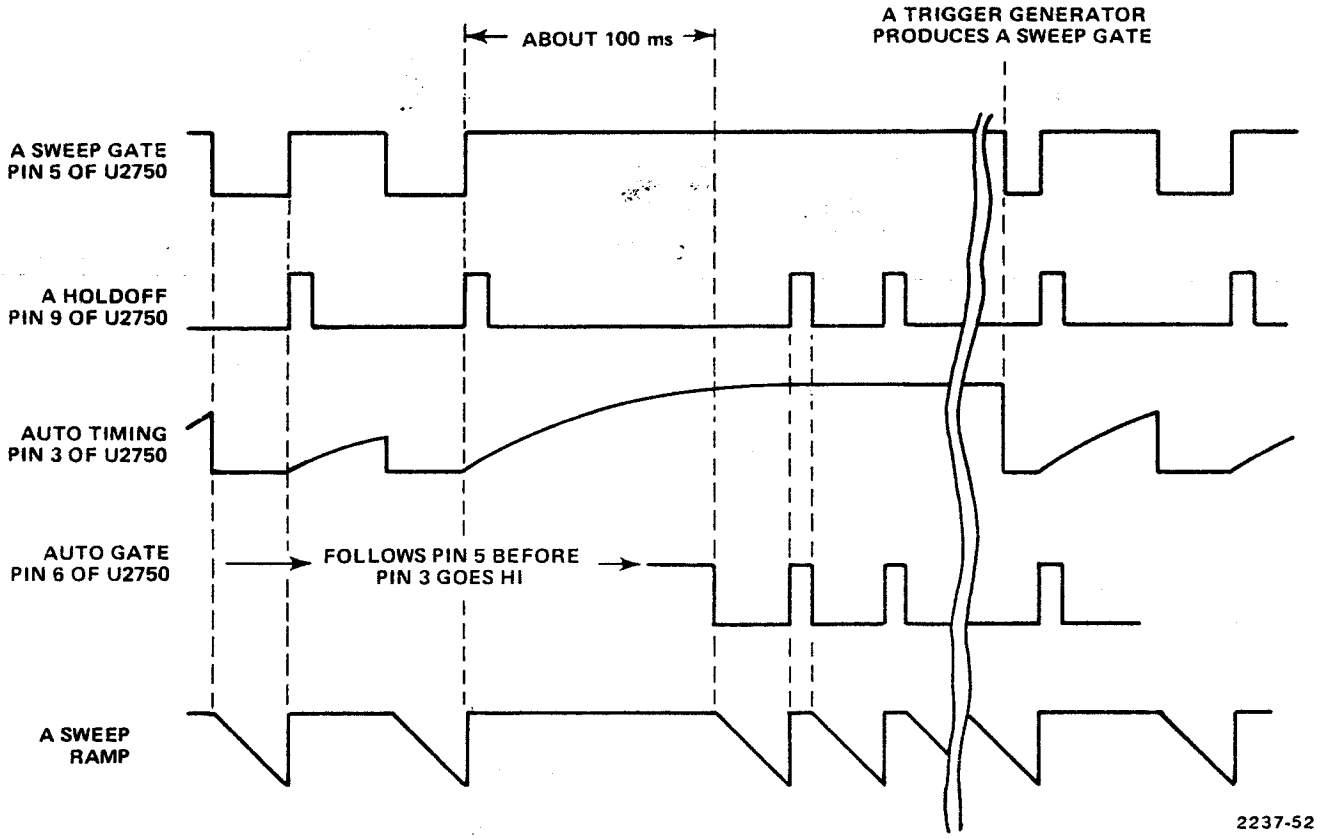

Figure 4-12 Waveforms produced during AUTO sweep gate generation.

on. Capacitor C2757 discharges rapidly through transistor A. This sets input X of the AUTO gate logic LO which disables the logic. Now another AUTO gate can not be generated at pin 6 of U2750 until C2757 charges enough to set input X of the AUTO gate logic HI (about 100 milliseconds after the beginning of holdoff).

(c) Single Sweep Control. When the TRIG MODE switch (S2750) is set to SGL SWP, pin 1 of U2750 is connected to ground. Now, when adequately triggered, only one sweep ramp will be generated. After one sweep is displayed, another sweep can't be presented until after the SGL SWP button has been pushed. Figure 4-10 shows a functional block diagram of the Sweep Control integrated circuit and associated circuitry.

1 To operate in the single sweep mode, pin 1 of U2750 is grounded and pin 2 is pulled HI through R2752. This holds the R input of the single sweep latch within U2750 HI.

2 At the end of sweep ramp generation, the Q output of the holdoff latch steps HI. This HI is connected to the S input of the single sweep latch and sets the latch. The Q output of the single sweep latch holds pin 9 of U2750 HI even after the holdoff latch has reset. This permanetly holds off the A Trigger Generator.

3 To reset the single sweep latch, the SGL SWP button must be pushed and released. When the SGL SWP button is pushed, pin 2 of U2750 is set LO which sets the R input of the single sweep latch HI. When the SGL SWP button is released, pin 2 of U2750 steps HI causing a negative going transition on the R input of the single sweep latch. This transition resets the single sweep latch. The Q output of the single sweep latch goes LO which sets pin 9 of U2750 LO and terminates holdoff.

c. Main Module.

(1) Z-Axis Amplifier. Diagram 8 (FO-10) shows the Z-Axis Amplifier circuitry. The Z-Axis Amplifier consists of Q514, Q518, Q524, Q526 and associated circuitry.

(a) Normal Z-Axis Amplifier Operation. The Z-Axis Amplifier accepts signals from several sources, amplifies them, and supplies a control signal to the CRT Circuit to control display intensity. The sources of the signals used to control display intensity are: Vertical Switching Control circuit, A Sweep Generator, and the B Sweep Generator.

1 The Z Axis Amplifier input signals are applied to the emitter of common base amplifier Q514. Transistor Q514 provides isolation between the signal sorces and the Z Axis Amplifier. The algebraic sum of the signals applied to the emitter of Q514 determines the current supplied to the base of Q518.

2 Transistor Q518 is an emitter follower. The signal on the emitter of Q518 drives Q524 and Q526.

3 Transistors Q524 and Q526 are connected as a complementary symmetry amplifier. The signal from the emitter of Q518 drives both bases and the output is taken from the junction of the two collectors. This output signal is supplied to the crt control grid through the dc restorer portion of the CRT Circuit.

(b) BEAMFINDER Z-Axis Amplifier Operation. When the BEAMFINDER button is pushed and held, the Z Axis Amplifier ignores the input signals and provides a visible display.

1 With the BEAMFINDER button pushed and held, +32 volt is disconnected from R512 and +5 volts is connected to R504.

2 The +5 volts connected to R504 reverse biases CR506 and CR505. This disconnects the input signals from the emitter of Q514.

3 When +32 volts is removed from R512, the base of Q518 is pulled slightly more negative through R514. This sets conduction in Q518 at a level which provides a visible display regardless of the Z Axis Amplifier input signals.

(2) Crt Circuit. Diagram 8 (FO-10) shows the CRT Circuit. The CRT Circuit provides the high voltage levels needed to operate the crt. The CRT Circuit consists of the high voltage oscillator, high voltage regulator, high voltage rectifier, high voltage multiplier, and dc restorer.

(a) High Voltage Oscillator. The high voltage oscillator consists of Q552, Q556, T550 and associated circuitry. Figure 4-13 shows the waveforms produced in the high voltage oscillator.

1 To explain the high voltage oscillator, we must choose a given point in an oscillation and describe the sequence of events. Assume pin 3 of T550 is going more positive and pin 5 is going less positive.

2 As pin 3 of T550 goes more positive, the voltage across the feedback winding of T550 (between pins 3 and 6) adds to the voltage on C548. When the voltage on pin 3 becomes sufficiently positive, it pulls the base of Q552 positive enough to turn on Q552.

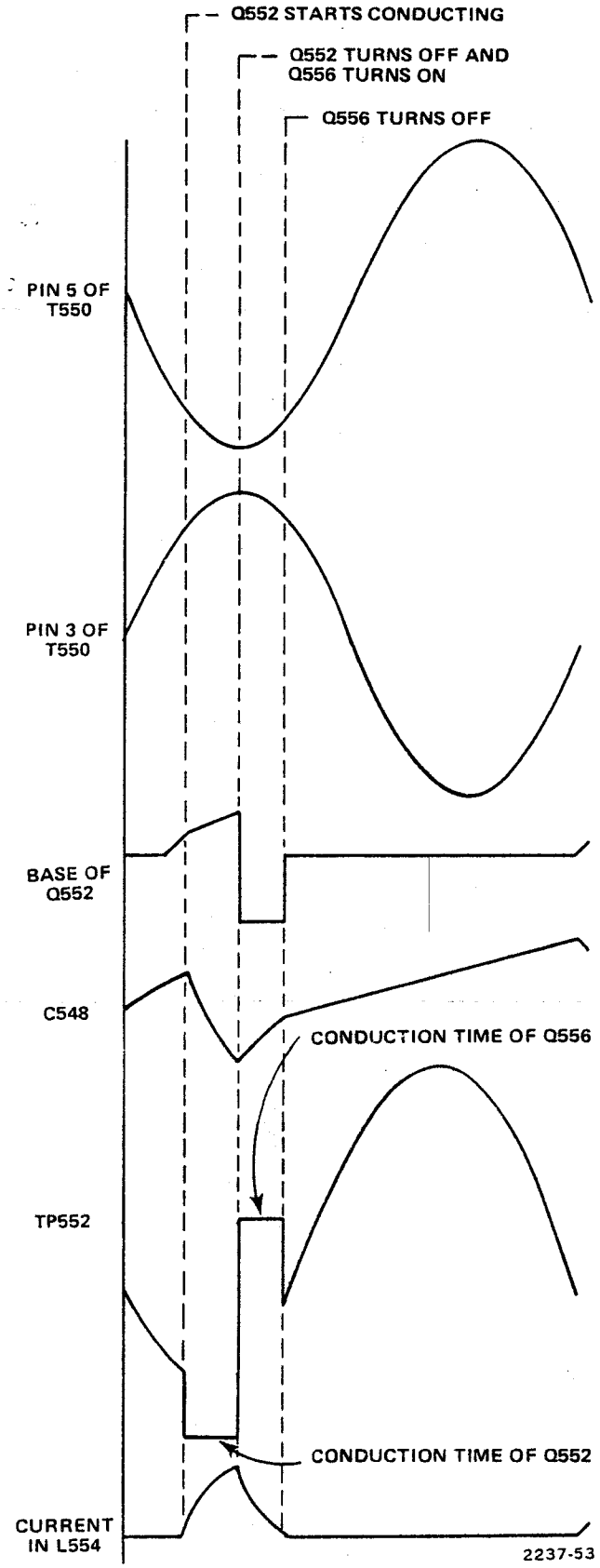

Figure 4-13. Waveforms produced in the high voltage oscillator

3 As Q552 turns on, current is drawn through T550 and L554. This current induces positive feedback into the feedback coil of L554 and turns on Q552 harder. The voltages induced into the feedback coils of T550 and L554 hold Q552 on.

4 As the magnitude of the current in T550 and L554 increases, the rate of change of the current decreases. When the rate of change of the current reaches about zero, the voltage induced in the feedback windings of T550 and L554 becomes insufficient to hold Q552 on. Q552 begins to turn off. Note that at this instant the voltage across the secondary of L554 is 0 volts.

5 As Q552 is turning off, the magnetic field around L554 starts collapsing. This induces a voltage in the feedback winding of L554 which speeds up the turnoff of Q552.

6 The collapsing magnetic field of L554 induces a voltage in L554 which forces the emitter of Q556 more positive. This voltage causes the emitter of Q556 to go more positive than pin 4 of T550. As a result, Q556 turns on and places L554 in parallel with the primary winding of T550.

7 The current produced by the collapsing magnetic field of L554 flows through Q556 and the primary winding of T550. This transfers the energy stored in L554 to T550 and increases the efficiency of the circuit. The amount of energy stored in L554 is controlled by the high voltage regulator.

8 As the oscillation cycle continues, the voltage across L554 decreases until it is not sufficient to hold Q556 on. Therefore Q556 turns off.

9 The cycle continues until pin 3 of T550 again becomes sufficiently positive to turn on Q552. Then the sequence just described repeats.

(b) High Voltage Regulator. The high voltage regulator consists of Q544, Q548, and associated circuitry. Diagram 8 (FO-10) shows the high voltage regulator circuitry. The high voltage regulator controls the output of the high voltage oscillator by controlling the energy in the primary circuit. To fully understand the high voltage regulator, read the previous High Voltage Oscillator discussion before continuing with this discussion.

1 The high voltage regulator controls the point during an oscillation cycle that Q552 is turned on. Assume the −2 kV supply starts to go more negative (too much energy is transferred to the secondary circuit of T550).

2 As the −2 kV supply goes more negative it pulls the base of Q554 less positive. The collector of Q544 goes more positive which decreases the collector current of Q548. Transistor Q548 supplies charge current to C548. Because the collector current of Q548 is decreased, C548 charges more slowly. As a result, the voltage on pin 3 of T550 will not become positive enough to turn on Q552 until later in the oscillation cycle (see Figure 4-13). Therefore less energy is stored in L554 and transferred to the primary of T550 when Q556 turns on. This decreases the amount of energy transferred to the secondary of T550 which causes the −2 kV supply to go less negative.

3 If the −2 kV supply goes less negative, Q544 and Q548 turn on harder charging C548 faster. The voltage on pin 3 of T550 becomes positive enough to turn on Q552 earlier in the oscillation cycle. Therefore more energy is stored in L554 and transferred to the primary of T550 when Q556 turns on. As a result, more energy is transferred to the secondary circuit of T550 and the −2 kV supply goes more negative.

4 In the event the high voltage regulator malfunctions, VR552, VR553, and CR552 provide overvoltage protection. If the peak voltage on pin 8 of T550 exceeds about +200 volts, VR552 conducts. When VR552 and VR553 conduct they turn on Q552 which draws enough current to open fuse F558.

(c) High Voltage Rectifier. Figure 4-14 shows a simplified diagram of the high voltage rectifier. Diagram 8 (FO-10) shows the high voltage rectifier and associated circuitry.

1 The high voltage rectifier is contained within U550. The circuit half wave rectifies the −2 kV peak ac signal at pin 9 of T550. The rectified and filtered voltage is supplied to the crt cathode, dc restorer, FOCUS control, and the high voltage regulator.

2 The heater supply winding of T550 is referenced to the −2 kV supply. This prevents breakdown between the heater and the cathode due to a large voltage difference between them.

(d) High Voltage Multiplier. Diagram 8 (FO-10) shows the high voltage multiplier. The circuit is a standard voltage multiplier consisting of diodes and capacitors. The multiplication factor is 3. The multiplier is contained within module U550. The output of the multiplier supplies the positive anode voltage for the crt.

(e) DC Restorer. The dc restorer is contained within U550. Figure 4-15 shows a simplified diagram of the circuit.

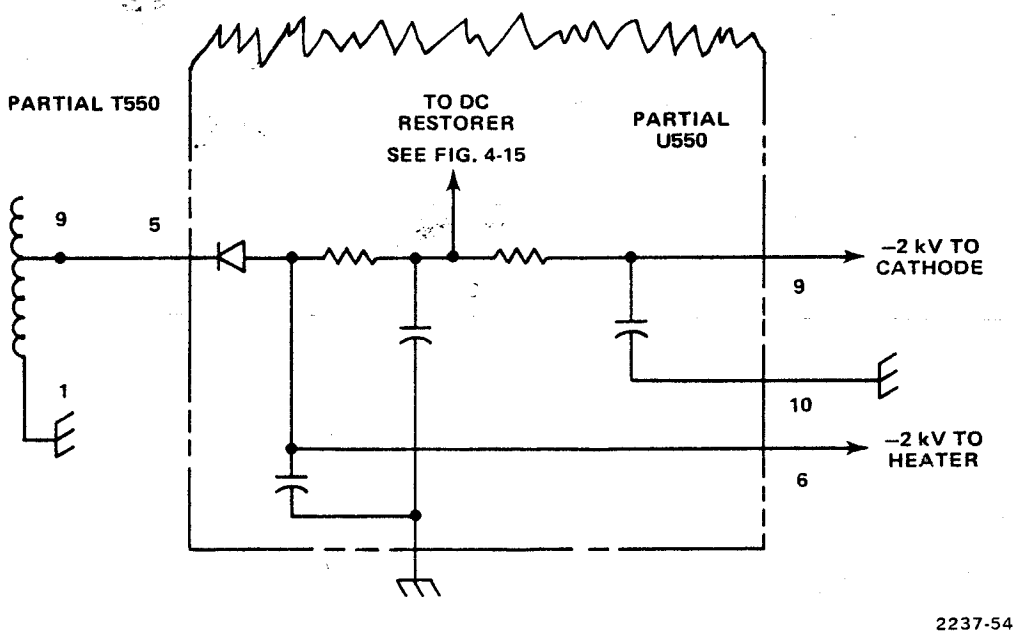

Figure 4-14. High voltage rectifier.

1 To control the crt beam current, and therefore display intensity, the voltage on the crt control grid is varied through the dc restorer. How negative the control grid is with respect to the cathode is determined by the difference in the voltages from the crt bias setting and the Z Axis Amplifier.

2 The voltages from the bias control and the Z Axis Amplifier will vary; however, to make this discussion easier to understand, assume the bias control sets pin 2 of U550 to +100 volts and the Z Axis Amplifier sets pin 1 of U550 to +20 volts.

3 On positive-going excursions of the voltage on pin 8 of T550, diode C clamps the voltage at point X to about the voltage on pin 2 of U550 (see Figure 4-15). We have assumed this voltage to be about 100 volts. Point Y is clamped at about −2 kV by diode G. Capacitor E charges to the difference between the −2 kV supply and pin 2 of U550 (about 2.1 kV). Note that diode F is reverse biased. When the voltage on pin 8 of T550 falls below the level on pin 1 of U550 (set by the Z Axis Amplifier), diode B clamps point X at about the voltage on pin 2 of U550 (+20 volts assumed). Since the voltage on capacitor E can't be changed instantaneously, point Y steps negative by an amount equal to the difference in the levels at which diodes B and C conduct (80 volts assumed) Point Y steps negative to −2080 volts. This is 2100 volts (the charge on capacitor A) more negative than the conduction level of diode B.

4 When point Y steps to −2080, diode G becomes reverse biased and diode F becomes forward biased. Point Y sets the crt grid to about −2080 volts or about 80 volts more negative than the cathode. While diode F is forward biased, capacitor E discharges slightly into capacitor A. This replaces the charge that leaks off capacitor A while diode F is reverse biased.

5 When the oscillation on pin 8 of T550 again becomes sufficiently positive, the original condition is restored. Diode C clamps point X at about 100 volts and diode F is reverse biased. While diode F is reverse biased, the charge on capacitor A holds the crt control grid at about −2080 volts.

6 The action just described is fairly slow. To provide rapid intensity changes, the rapid voltage changes from the Z Axis Amplifier are supplied directly to the control grid through capacitor A.

(3) Horizontal Amplifier. Diagram 7 (FO-9) shows the Horizontal Amplifier circuitry. The Horizontal Amplifier provides the final signal amplification to drive the horizontal deflection plates of the crt. The circuit consists of two single ended feedback amplifiers. Transistor Q234 is a constant voltage source for the input stages of both amplifiers (Q232 and Q274). The collectors of Q232 and Q274 drive the bases of complementary symmetry amplifiers Q244-Q246 and Q284-Q286 respectively. The signals in the two amplifiers are 180 degrees out of phase with each other.

(4) +B GATE OUT Amplifier. Diagram 7 (FO-9) shows the +B GATE OUT Amplifier circuitry.

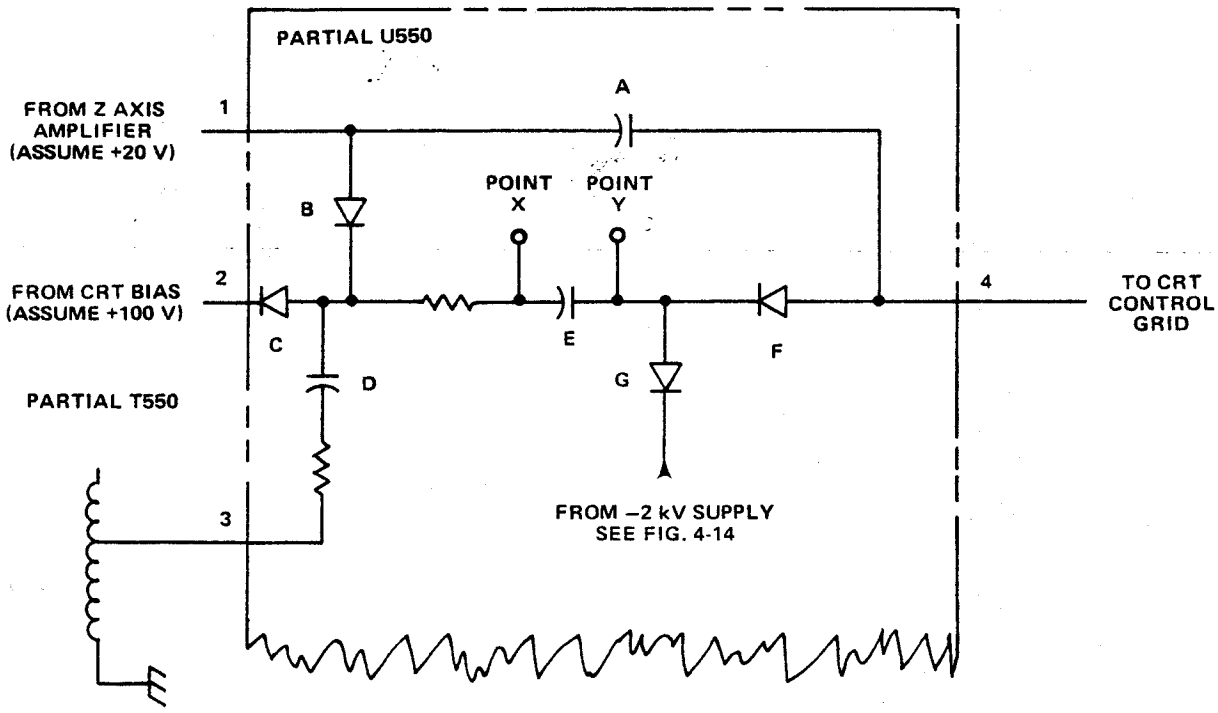

[A] DC RESTORER CIRCUITRY

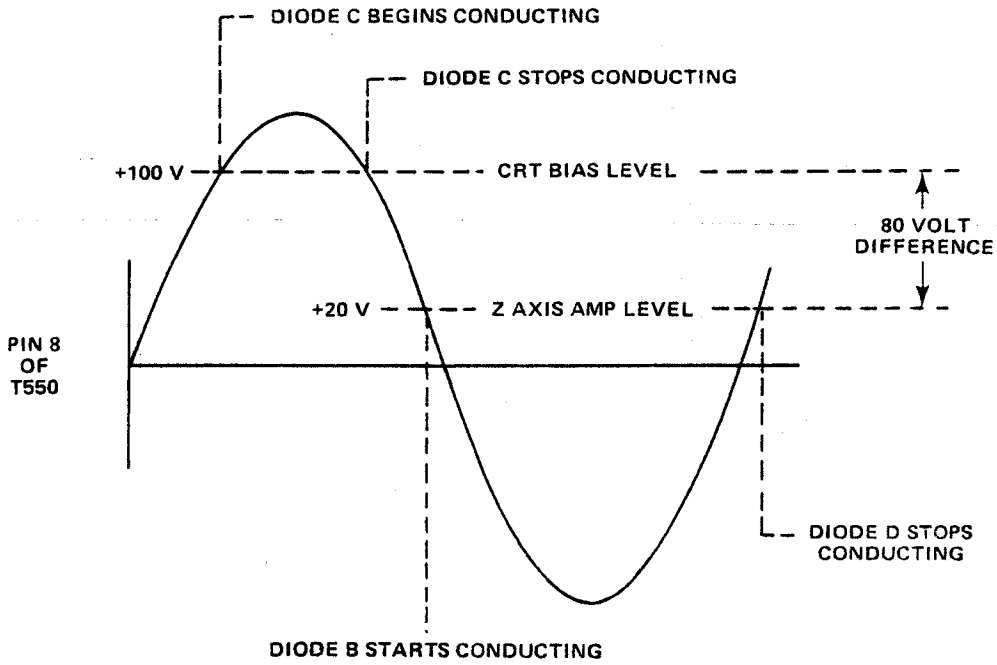

[B] THEORETICAL DC RESTORER WAVEFORM (NOT MEASURABLE)

For Service Manuals Contact
MAURITRON TECHNICAL SERVICES
8 Cherry Tree Rd, Chinnor
Oxon OX9 4QY
Tel:- 01844-351694 Fax:- 01844-352554
Email:- enquiries@mauritron.co.uk

2237-55

Figure 4-15. Dc restorer.

(a) The +B GATE OUT Amplifier amplifies the signal from the +B GATE OUT buffer. The output of this circuit is connected to a rear panel mounted BNC connector. The output signal steps to about +5 volts during B sweep ramp generation and about 0 volts the rest of the time. The circuit consists of inverting amplifier Q356, emitter follower Q358, and associated circuitry.

(b) When the input of the circuitry goes more positive, Q356 turns on hard and its collector goes to about +0.7 volts. This causes the emitter of Q358 to go to about 0 volts.

(c) When the input steps less positive, Q356 turns off and the base of Q358 is pulled more positive through R354. The emitter of Q358 is prevented from going more positive than +5.1 volts by VR353.

(5) Calibrator. Diagram 7 (FO-9) shows the Calibrator circuitry. The Calibrator generates an accurate 1.0 volt square wave for use in probe compensation and checking vertical gain accuracy. The circuit consists of an astable multivibrator and an output amplifier.

(a) Multivibrator. Transistors Q376 and Q382 form an astable multivibrator. The multivibrator runs at approximately 1 kilohertz. The frequency is determined by the RC time constant of C376-R377-R375. Transistors Q376 and Q382 conduct alternately, producing a square wave output signal at the collector of Q382. Diodes CR372 and CR373 limit the charge on C376 to about 18 volts to prevent damage to Q376 or Q382 when either transistor is removed while the instrument is operating.

(b) Output Amplifier. The square wave output signal from the collector of Q382 drives the output amplifier (Q386). Transistor Q386 is alternately driven into saturation, then into cutoff. This results in a 0 to +5 volt square wave at the collector of Q386. Amplitude adjustment R386 sets the collector current in Q386 to produce a 1 volt square wave across R388. This 1 volt square wave is connected to J387 on the instrument front panel.

(6) Low Voltage Power Supplies. Diagram 9 (FO-11) shows the Low Voltage Power Supplies, except for the +95 volt supply. Diagram 8 (FO-10) shows the +95 volt supply.

(a) Primary Circuit. All the supplies except the +95 volt supply receive power from T700. To reduce electromagnetic interference, the ac supply voltage is filtered by a filter which is part of P700. There are two windings in the primary of T700. These windings can be placed in series or parallel by the line voltage selector switch (S701). The two windings are placed in series for operation from a 232 volt power source or in parallel for operation from a 116 volt power source.

(b) +32 Volt Supply. Diagram 9 (FO-11) shows the +32 volt supply. The +32 volt supply consists of U722A, Q732, Q734, Q736 and associated circuitry.

1 Operational amplifier U722A controls regulation of the +32 volt supply. The noninverting input of U722A is set to +9 volts by VR722. The output of the +32 volt supply sets the inverting input of U722A at +9 volts through voltage divider R735-R736-R737.

2 The output of U722A (about +9 volts) is level shifted by a zener diode (VR725). This level shifted voltage controls the base drive of Q732 and Q736 which are connected as a Darlington amplifier. Transistor Q734 provides overcurrent protection.

3 Regulation occurs as follows. Assume the +32 volt supply tries to go less positive. This is sensed on the wiper of R736 and causes the inverting input of U722A to try to go less positive. As a result, the output of U722A goes more positive which turns on Q732 and Q736 harder. When Q736 turns on harder, the +32 volt supply goes more positive which corrects for the original deviation.

(c) +5 Volt Supply. Diagram 9 (FO-11) shows the +5 volt supply. The +5 volt supply consists of U722B, Q742, Q744, Q746 and associated circuitry.

1 The reference voltage for the +5 volt supply is obtained from the +32 volt supply through R741 and R742. The reference voltage sets the noninverting input of U722B to +5 volts.

2 The inverting input of U722B senses changes in the +5 volt supply through R743.

3 The output of U722B controls conduction in Q744 and Q746 which are connected as a Darlington amplifier. The conduction level of Q746 controls the +5 volt supply output voltage. Transistor Q742 provides overcurrent protection for the +5 volt supply.

(d) −5 Volt Supply. Diagram 9 (FO-11) shows the −5 volt supply. The −5 volt supply consists of U762, Q764, Q766, Q768 and associated circuitry.

1 In the −5 volt supply, the noninverting input of the operational amplifier (U762) is not referenced to the +32 volt supply as in the +5 volt supply. Instead it is connected to ground (0 volts) through R764.

2 The inverting input of U762 does not directly sense the supply output voltage as in the +5 volt supply. Instead the inverting input senses both the +32 and −5 volt supplies through voltage divider R763-R762. This sets the inverting input to 0 volts. Since the +32 volt supply is constant, changes in the −5 volt supply are sensed at the inverting input.

3 The output of U762 is level shifted by several series connected diodes. The level shifted voltage controls the conduction of Q766. The collector of Q766 controls the conduction of Q768 which controls the −5 volt supply output voltage. Transistor Q764 provides overcurrent protection for the −5 volt supply.

4 Regulation of the −5 volt supply occurs as follows. Assume the −5 volt supply tries to go more negative. This tries to force the inverting input of U762 negative. The output of U762 drives the base of Q766 less negative. This causes Q768 to conduct less, causing its collector to go less negative and correct the original condition.

(e) Overcurrent Protection. The following describes overcurrent protection for the +32 volt supply. Overcurrent protection for the +5 volt and −5 volt supplies operates in a similar manner.

1 As the load on the +32 volt supply increases, the voltage dropped across R734 (the current sensing resistor) also increases. As the voltage across R734 increases it forces the emitter and the base of Q736 more positive.

2 When the load on the +32 volt supply becomes excessive, the voltage on the base of Q736 becomes sufficiently positive to forward bias Q734 through R732 and R733. As Q734 begins to conduct, it reduces the forward bias on Q732 and Q736 causing the +32 volt supply output to go less positive. The greater the load on the +32 volt supply the more Q734 conducts and the less positive the +32 volt supply goes.

3 The current sensing resistors for the +5 and −5 volt supplies are R748 and R768 respectively.

(f) +95 Volt Supply. Diagram 8 (FO-10) shows the +95 volt supply. The +95 volt supply consists of CR582 and associated circuitry. The +95 volt supply is powered by the high voltage oscillator through T550. The ac voltage on pin 2 of T550 is half wave rectified by CR582. The half wave rectified voltage is filtered by C582, L582, and C584. Regulation is provided by the high voltage regulator.

4.4 FUNCTIONS OF CONTROLS, CONNECTORS, AND INDICATORS.

The location of controls, connectors, and indicators is shown on Figure 6-2 (FO-1) in the foldout section at the rear of this manual. Detailed function descriptions are listed in Table 4-2.

For Service Manuals Contact
MAURITRON TECHNICAL SERVICES
8 Cherry Tree Rd, Chinnor
Oxon OX9 4QY
Tel:- 01844-351694 Fax:- 01844-352554
Email:- enquiries@mauritron.co.uk

Table 4-2. Functions of Controls, Connectors, and Indicators

Figure 6-2 Index No.	Control, connector, or indicator name	Function
1	LINE RANGE	Selects the line voltage range on which the instrument is to be operated. The ranges are indicated on the rear panel.
2	Fuse Holder	Contains the instrument line fuse.
3	Power Cord Connector	Connects the detachable power cord to the instrument.
4	POWER	Turns the instrument on and off. Pull to turn on; push to turn off.
5	ON Indicator	Indicates when power is applied to the instrument; flashes if the line voltage drops below allowable limits.
6	INTEN	Controls the brightness of the crt display.
7	ASTIG	Screwdriver adjustment used in conjunction with the FOCUS control to initially obtain a well defined display. Once set, usually requires little or no adjustment.
8	FOCUS	Adjusts for a well defined display during normal operation.
9	TRACE ROTATION	Screwdriver adjustment used to align the trace with horizontal graticule line.
10	CALIBRATOR	Provides a one volt, one kilohertz, square wave output for setting probe compensation and checking vertical gain.
11	Graticule	Internal graticule prevents parallax errors. Rise and fall time measurement points are indicated on the left edge, and near the top and bottom horizontal portions of the graticule.
12	BEAM FINDER	Locates an off screen display. When pushed, a compressed display is visible within the graticule area. This display is independent of position controls, intensity setting, or applied signals.
13	SCALE ILLUM	Controls graticule illumination.
14	VERT MODE	Selects the operating mode for the vertical deflection system. CH 1: Displays only signals applied to the CH 1 input connector. ALT: Signals applied to CH 1 and CH 2 input connectors are alternately displayed. The alternation occurs during retrace at the end of each sweep. Useful at sweep rates of 0.5 milliseconds/division or faster. The display begins to flicker at rates slower than 0.5 milliseconds/division; therefore, the CHOP mode should be used at these rates. ADD: Displays the algebraic sum of the signals applied to the CH 1 and CH 2 input connectors. CHOP: Signals applied to CH 1 and CH 2 input connectors are alternately displayed at a fixed rate of about 250 kilohertz. Useful at sweep rates of 0.5 milliseconds/division or slower. At rates above 0.5 milliseconds/division the chopped segments become visible; therefore, the ALT mode should be used.

Table 4-2. Functions of Controls, Connectors, and Indicators—Continued

Figure 6-2 Index No.	Control, connector, or indicator name	Function
14 (continued)		CH 2 OR X-Y: Displays only signals applied to the CH 2 input connector. Must be selected for X-Y operation. TRIG VIEW or 20 MHz BW: Three position switch. When pulled out, the bandwidth of the vertical deflection system is limited to 20 megahertz; when pushed part way in the vertical bandwidth is normal; and when pushed completely in and held, the signal applied to the A Sweep trigger generator is displayed.
15	VOLTS/DIV	Outer ring portion of the control selects the vertical deflection factor in a 1-2-5 sequence. Factors are calibrated when the VAR portion of the controls is in its fully clockwise detent position.
16	VAR	Inner knob portion of the VOLTS/DIV control. Provides continuously variable uncalibrated vertical deflection factors between calibrated settings. Extends the maximum vertical deflection factor to 125 volts/division when using a 10X probe. This control must be in its fully clockwise detent position for calibrated deflection factors.
17	Deflection Factor Indicator	A light colored area under the VOLTS/DIV control skirt, which indicates the vertical deflection factor associated with the probe being used. Check the attenuation factor of the probe and use the correspondingly marked light colored area.
18	UNCAL Indicator	Indicates when the VAR portion of the VOLTS/DIV control is out of its fully clockwise detent position and uncalibrated deflection factors are being used.
19	AC-GND-DC	Selects the method of coupling the input signal to the vertical input amplifier. AC: Input signals are capacitively coupled, blocking any dc component. Low frequencies are attenuated about 3 dB at 10 hertz using a 1X probe and at 1 hertz using a 10X probe. Ac coupling may cause tilting of square wave signals below about 1 kilohertz. GND: Connects the vertical input amplifier to ground to provide a ground reference display (input signal is disconnected). Connects the input signal to ground through the ac input capacitor and a one megohm resistor to keep the input coupling capacitor precharged. DC: Input signals are directly coupled, thus passing all components of the signal to the input amplifier.
20	Vertical Channel Ininput Connectors	Connects the Channel 1 and Channel 2 vertical input probes to the instrument. In the X-Y mode of operation, the CH 1 OR X input provides horizontal deflection and the CH 2 OR Y input provides vertical deflection.
21	POSITION	Provides vertical positioning control of the display. In the X-Y mode of operation, the CH 1 OR X control positions the display horizontally and the CH 2 OR Y control positions the display vertically.
22	INVERT	Inverts the Channel 2 display only.

Table 4-2. Functions of Control, Connectors, and Indicators—Continued

Figure 6-2 Index No.	Control, connector, or indicator name	Function
23	HORIZ DISPLAY	Selects the mode of operation for the horizontal deflection system. A: Horizontal deflection is provided by the A sweep generator at a rate set by A TIME/DIV. The B sweep generator (delayed sweep) is disabled. MIXED: The first part of the sweep is displayed at a rate set by A TIME/DIV and the last part of the sweep is displayed at a rate set by B TIME/DIV. The relative amount of display controlled by each setting is determined by the setting on the DELAY TIME POS dial. A INTEN: Horizontal deflection is provided by the A sweep generator at a rate set by A TIME/DIV. The B sweep generator produces an intensified zone on the display. The length of time the display is intensified is about ten times the B TIME/DIV setting except when A sweep ends before B sweep. The location of the intensified zone on the display is determined by the DELAY TIME POS dial setting. B DLY'D: Horizontal deflection is provided by the B sweep generator at a rate set by B TIME/DIV. The A sweep generator continues to operate. With the B sweep SOURCE set to STARTS AFTER DELAY, the start of B sweep is delayed from the start of A sweep by a time determined by the settings of A TIME/DIV and DELAY TIME POS. To calculate the delay, multiply the A TIME/DIV setting by the DELAY TIME POS dial setting.
24	POSITION	Provides horizontal positioning control of the display, except in the X-Y mode of operation when the CH 1 OR X, POSITION control provides horizontal positioning.
25	A AND B TIME/DIV	Selects the sweep rate for the A and B sweep. The A sweep rate is set by rotating the outer ring portion of the control. The rate is shown between the two black lines on the clear skirt of the control. This rate is multiplied by the DELAY TIME POS setting when using the A INTEN or B DLY'D display modes. For calibrated sweep rates, the VAR knob portion of the control must be in the fully clockwise detent position. The B sweep rate is set by pulling the outer ring out and rotating it to a setting shown by the white line scribed on the ring. The X-Y mode of operation is selected with the A sweep rate control is set fully counterclockwise.
26	VAR	Inner knob portion of the A AND B TIME/DIV control. Provides continuously variable uncalibrated sweep rates between calibrated settings of the A TIME/DIV settings. Must be in its fully clockwise detent position for calibrated A sweep rates and delay times.
27	UNCAL Indicator	Indicates when the VAR portion of the A AND B TIME/DIV control is out of its fully clockwise detent position and the A sweep rates are not calibrated.

Table 4-2. Functions of Control, Connectors, and Indicators—Continued

Figure 6-2 Index No.	Control, connector, or indicator name	Function
28	X10 MAG	Increases the displayed sweep rate by a factor of 10. Extends the fastest sweep rate to 5 nanoseconds/division. The magnified sweep display is the center one division of the unmagnified display (0.5 division from either side of the center vertical graticule line).
29	X10 MAG Indicator	Indicates when the X10 MAG is selected.
30	DELAY TIME POS	Provides a variable B sweep delay from 0.000 to 10.000 times the setting of the A TIME/DIV control.
31	TRIG MODE	Selects the mode of operation for the A sweep trigger. AUTO: With proper trigger LEVEL and COUPLING settings, A sweep can be initiated by signals above about 20 hertz. In the absence of a triggering signal or with control misadjustments, the A sweep generator free-runs to provide a reference display. NORM: With proper trigger LEVEL and COUPLING settings, A sweep can be initiated by an input signal. In the absence of a triggering signal or with control misadjustments, the A sweep generator does not run and there is no display. SGL SWP: A momentary contact push button, which cancels previous TRIG MODE selections and selects a single sweep mode of operation. This mode operates the same as NORM, except only one sweep is displayed on a trigger signal. Another single sweep cannot be displayed until the SGL SWP push button is pressed to reset the trigger circuit.
32	TRIG READY Indicator	Indicates the A sweep is reset and ready for a single sweep display when a trigger signal occurs. If the indicator is out when in the SGL SWP mode, the SGL SWP push button must be pressed to reset the trigger circuit.
33	SOURCE	Selects the source of trigger input signal. STARTS AFTER DELAY (B trigger only): B sweep runs immediately after the delay time selected by the A TIME/DIV setting multiplied by the DELAY TIME POS setting. No B trigger is required. In any other B trigger SOURCE setting a trigger is required after the delay time before B sweep will run. NORM: Provides a trigger from the vertical deflection system. The actual source is the displayed signal. In this mode, CH 1 and CH 2 time relationship measurements are not valid and should not be used. This mode is not recommended for use in the CHOP or ALT VERT MODE because the display triggers on the channel switching transients. CH 1: Provides a trigger from the CH 1 preamplifier. The CH 2 display may be unstable if it is not time related to CH 1. CH 2: Provides a trigger from the CH 2 preamplifier. The CH 1 display may be unstable if it is not time related to CH 2. LINE (A trigger only): Provides a trigger from a sample of the power-line frequency. This trigger is useful when channel inputs are time related (multiple or sub-multiple) to the power-line frequency. Also, it is useful for stabilizing a display that has a power-line frequency component on a complex waveform.

Table 4-2. Functions of Control, Connectors, and Indicators—Continued

Figure 6-2 Index No.	Control, connector, or indicator name	Function
33 (continued)		EXT: Provides a trigger from an external signal connected to the External Trigger Input connector. This trigger input must be time related to the input signals to provide a stable display. EXT (÷ by 10): The same as EXT above, except the input signal is attenuated by a factor of 10.
34	COUPLING	Selects the method used to couple signals to the trigger generator. AC: Selects capacitive coupling, which blocks dc components on the signal. Signals below about 60 hertz are attenuated. LF REJ: Selects capacitive coupling, which blocks dc components on the signal. Signals below about 50 kilohertz are rejected. Useful for displaying high frequency components of complex waveforms. HF REJ: Signals are capacitively coupled, which blocks the dc component. Signals below about 60 hertz and above about 50 kilohertz are attenuated. Useful for displaying low frequency components of complex waveforms. DC: All components of the signal are coupled. Useful for displaying low-frequency or low repetition rate signals.
35	LEVEL	Selects the amplitude point on the trigger signal at which the sweep is triggered. It is usually adjusted after the trigger SOURCE, COUPLING, and SLOPE have been selected.
36	SLOPE	Selects the slope of the trigger signal on which the sweep is triggered. OUT +: Sweep is triggered on the positive going portion of the trigger signal. IN—: Sweep is triggered on the negative going portion of the trigger signal.
37	External Trigger Input Connector	Connects external trigger input probe or cables to the instrument.
38	A TRIGGER HOLDOFF	Provides control of holdoff time between sweeps. Variable up to ten times the setting of the A TIME/DIV setting, except in the .2 and .5 second ranges. Useful when triggering on low repetition pulses or aperiodic signals. Obtain the best possible display using the A sweep trigger controls before setting the hold off time.
39	Ground Binding Post	External connector to chassis (earth) ground. The connector will accept cables or wires using open end solder lugs, banana plugs, or stripped wire for connection.
40	+A GATE	Provides a +5 volt positive pulse output during the A sweep time.
41	+B GATE	Provides a +5 volt positive pulse output during the B sweep time.
42	EXT Z AXIS	Connects external Z-axis inputs for crt intensity modulation. External inputs may also be used for crt blanking provided the crt intensity is properly set. Useful for adding time markers to a display, or when using the instrument as a peripheral display in a monitoring system.
43	CH 2 OUT	Provides an output signal from the CH 2 preamplifier. Useful for cascade operation (CH 2 into CH 1) to increase vertical deflection sensitivity. Also, may be used to trigger external equipment.

4-5. OPERATING CONSIDERATIONS. To ensure optimum measurement accuracy, the following information should be considered before operating the oscilloscope.

a. Signal Connections. In general, probes offer the most convenient means of connecting an input signal to the instrument. They are shielded to prevent pickup of electrostatic interference. The 10X probe offers a high input impedance, which allows the circuit under test to perform very close to normal operation conditions. However, it also attenuates the input signal ten times.

(1) In high frequency applications that require maximum overall bandwidth, use coaxial cables terminated at both ends in their characteristic impedance. For further information, refer to the paragraph on Coaxial Cables below.

(2) High level, low frequency signals may be directly connected to the input connectors with short, unshielded leads. This coupling method works best for signals below about one kilohertz and deflection factors above one volt/division. When this method is used, establish a common ground between the instrument and the equipment under test. To avoid errors in the display, keep the leads away from any source of interference. If interference is excessive with unshielded leads, use a coaxial cable or a probe.

b. Loading Effect of Input Connections. As nearly as possible, simulate actual operating conditions in the equipment under test. Otherwise, the equipment under test may not produce a normal signal. Because of their high input impedance, the supplied probes offer the least circuit loading. When the signal is directly coupled to the input of this instrument, the input impedance is about one megohm paralleled by about 20 picofarads. When the signal is coupled to the input through a coaxial cable, the effective input capacitance depends upon the type and length of cable used. For information on obtaining maximum frequency response with coaxial cables, refer to the paragraph on Coaxial Cables below.

c. Coaxial Cables. Cables used to connect signals to the input connectors have a large effect on the accuracy of a displayed high frequency waveform.

(1) To maintain the high frequency characteristics of an applied signal, high quality, low loss coaxial cable should be used. Also, the cable should be terminated at both ends in its characteristic impedance. If it is necessary to use cables with differing characteristic impedances, use suitable impedance matching devices.

(2) To maintain fast rise time pulse characteristics; use the shortest length of coaxial cable possible. Also, observe the cable criteria for high frequency characteristics in (1) above.

d. Grounding. Reliable signal measurements cannot be made unless both the instrument and equipment under test are connected together by a common reference (ground) lead in addition to the signal lead or probe. Although the three-wire ac power cord provides a common connection when used with equipment with similar power cords, the ground loop produced may make accurate measurements impossible. The short ground lead connected to the probes provide the best signal ground. On coaxial cables, the shield provides a common ground when connected between two coaxial connectors (or with suitable adapters to provide a common ground). When using unshielded signal leads, a common ground lead should be connected from the chassis of the instrument (rear panel Ground Binding Post) to the chassis of the equipment under test.

e. Graticule. The internal 8 X 10 cm graticule provides parallax-free measurements. The graticule area is divided horizontally and vertically into 1 cm divisions. Vertical gain and horizontal timing are calibrated to the graticule, so accurate measurements can be made from the crt. Figure 4-17 shows the graticule with its various measurement markings. The terminology shown is used throughout this manual in discussions involving graticule measurements. Note the numeric scaling markings on the left side of the graticule. These are used when making rise or fall time measurements.

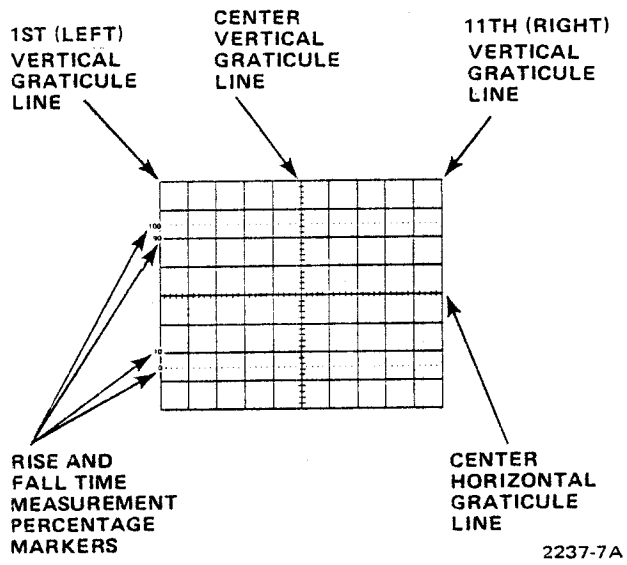

Figure 4-17 Graticule measurement markings

f. Common Mode Rejection (Figure 4-18). Some signals may contain undersirable components, such as in the dotted portion of Figure 4-18A. Common mode rejection can eliminate or reduce these components from the measurement. Use the following procedure to reduce or eliminate an undesireable line frequency component:

(1) Apply signal to CH 1 input connector.

(2) Apply line frequency signal to CH 2 input connector.

(3) Set VERT MODE to ALT.

(4) Push in INVERT button to invert channel 2 display.

(5) Set CH 2 VAR control to make channel 2 display amplitude about equal to undesired component of channel 1 display.

(6) Set VERT MODE to ADD and slightly readjust CH 2 VAR control for maximum rejection of undesired signal component (see Figure 4-18B).

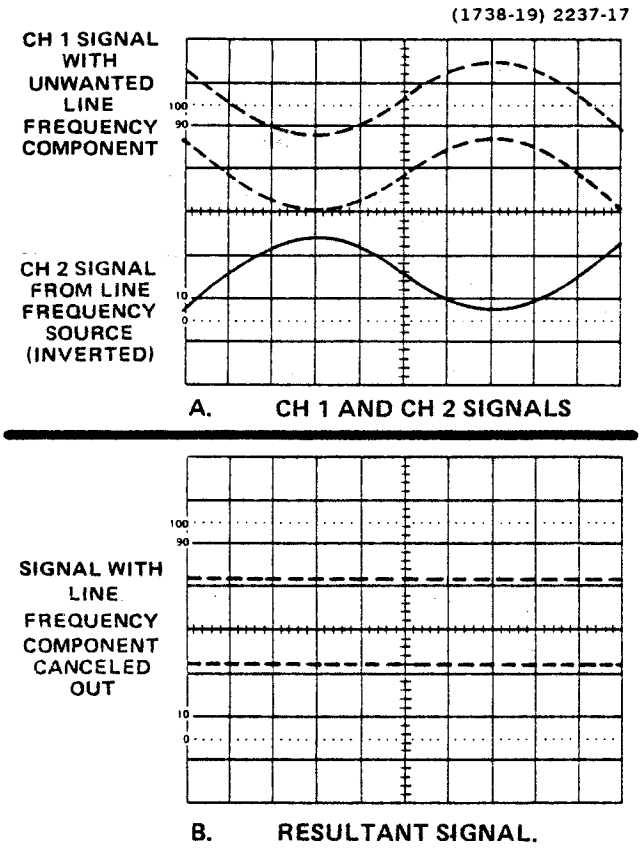

Figure 4-18. Common mode rejection of an undesired line-frequency.

g. Cascaded Operation. Maximum vertical sensitivity can be increased to approximately 1 millivolt/division by cascading the CH 1 and CH 2 amplifiers as follows:

(1) Connect CH 2 OUT signal (on rear panel) to CH 1 input via a 50 ohm cable and a 50 ohm termination.

(2) Set VERT MODE to CH 1.

(3) Apply an input signal to CH 2 input connector.

NOTE

In this mode, bandwidth is limited to about 40 megahertz.

h. Delayed Sweep Magnification. Following are two B Delayed modes, which may provide a higher apparent sweep rate magnification than provided by X10 MAG. First, try the Magnified Sweep Starts After Delay method. If this produces too much horizontal jitter, try the Magnified Triggered After Delay method.

(1) Magnified Sweep Starts After Delay (Figure 4-19). Use the following procedure to make delayed sweep magnification measurements.

(a) Set HORIZ DISPLAY to A INTEN and B SOURCE to STARTS AFTER DELAY.

(b) Use DELAY TIME POS to move the left edge of the intensified display to the left side of that portion of A sweep to be magnified.

(c) Set B TIME/DIV so just that portion of A sweep to be magnified is intensified (see Figure 4-19A).

(d) Set HORIZ DISPLAY to B DLY'D. The portion of A sweep that was intensified in (c) above is displayed in magnified form (see Figure 4-19B). The displayed sweep rate is determined by B TIME/DIV. To calculate the apparent magnification factor, use formula:

$$\text{Apparent Magnification} = \frac{\text{A TIME/DIV setting}}{\text{B TIME/DIV setting}}$$

(2) Magnified Sweep Triggered After Delay. If the Magnified Sweep Starts After Delay method above produces too much jitter, operate B sweep as follows:

(a) Perform steps (1) (a) through (1) (c) of Magnified Sweep Starts After Delay procedure above.

(b) Set B SOURCE to the same setting as A SOURCE. Set B LEVEL for a stable intensified zone.

NOTE

If the intensified zone cannot be stabilized, reset VOLTS/DIV for more display amplitude or use external triggering.

(c) Set HORIZ DISPLAY to B DLY'D. To obtain a stable display it may be necessary to slightly reset B LEVEL control.

4-6. INITIAL INSTRUMENT TURN-ON.

Apply power to the instrument as follows:

a. Verify that the instrument is configured for the correct power source (refer to the Operating Voltage Selection paragraphs in Section III, Preparation for Use and Shipment).

b. Remove the power cord from the front panel cover and plug it into the rear panel connector.

c. Connect the power cord to the power source receptacle.

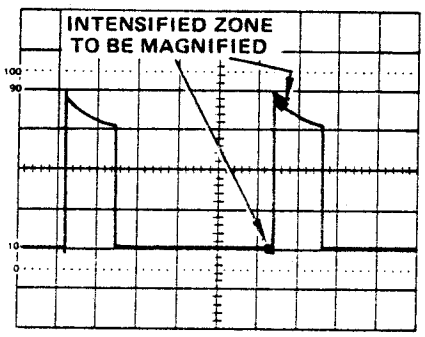

A. A INTENSIFIED DISPLAY

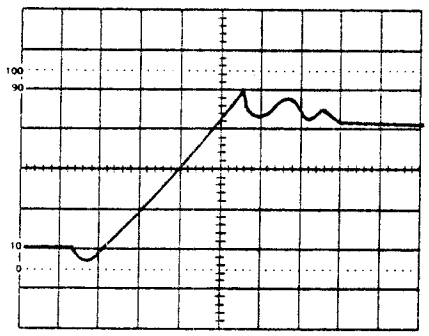

B. B DLY'D DISPLAY

(1738-31) 2237-18

Figure 4-19. Delayed sweep magnification.

d. Pull on the POWER switch. The ON indicator should light; if it blinks, the line voltage is too low.

e. Allow the instrument a few minutes to warm up (if actual measurements are to be taken, allow 5 minutes when the instrument has been stored in a temperature above 0°; 20 minutes for lower temperatures).

4-7. PRELIMINARY ADJUSTMENTS.

Before using the instrument for the first time, make the following preliminary settings and adjustments, then perform a NORMAL OPERATION functional check.

a. Initial Control Settings. Set the controls as follows (both channels if applicable):

VOLTS/DIV	.2 in 10X probe window
VAR	Fully clockwise (calibrated detent)
POSITION	Midrange
AC-GND-DC	DC
VERT MODE	CH 1
INVERT	Out (normal)
20 MHz BW	In (off)
TRIG MODE	AUTO
LEVEL	Midpoint of + slope, then adjust as necessary
SLOPE	OUT +
COUPLING	AC
A SOURCE	CH 1
B SOURCE	STARTS AFTER DELAY
DELAY TIME POS	Fully counterclockwise
A and B TIME/DIV	.2 ms
A VAR	Fully clockwise (calibrated detent)
HORIZ DISPLAY	A
X10 MAG	OUT (off)
A TRIGGER HOLDOFF	NORM
SCALE ILLUM	Fully counterclockwise
POSITION, INTEN, and FOCUS	Midrange

NOTE

At this point there should be a trace displayed. If not, recheck control settings. Then press BEAM FINDER and adjust the POSITION controls so the trace is centered vertically and horizontally on the crt. If no trace appeared when BEAM FINDER was pressed, the instrument is malfunctioning. If the trace appeared and could be centered, but disappeared when BEAM FINDER was released, increase the INTEN control.

b. Intensity Adjustment. Set the INTEN control for a comfortable viewing level. Later when FOCUS and ASTIG are adjusted, INTEN may need readjustment.

CAUTION

To protect the crt phosphor, do not turn the INTEN control higher than necessary to provide a satisfactory display. Since the blue faceplate filter reduces the display light output, avoid using too high an INTEN setting with this filter. When more intensity is desired, use the clear filter or reduce the ambient light level. The intensity may increase too high when changing the TIME/DIV settings from a fast to a slow sweep speed.

c. Focus and Astigmatism Adjustment. Adjust the FOCUS and ASTIG controls as follows:

(1) Connect a probe to either vertical channel. Then connect the probe to the CALIBRATOR output. Set VERT MODE to the channel being used.

(2) Adjust FOCUS so horizontal portion of display is focused.

(3) Adjust INTEN so rising portion of the display can be seen (If display is unstable, A LEVEL may need adjustment).

(4) Adjust ASTIG so horizontal and vertical portions of display are as equally focused as possible.

(5) Adjust FOCUS so vertical portion of display is as thin as possible.

(6) Repeat steps (4) and (5) for best overall display focus.

(7) Disconnect the probe from the CALIBRATOR output.

d. Trace Rotation Adjustment. Adjust the TRACE ROTATION control as follows:

(1) Set AC-GND-DC to GND.

(2) Vertically position the trace to the center horizontal graticule line.

(3) Adjust TRACE ROTATION so the trace is parallel to the center horizontal graticule line.

e. Graticule Scale Illumination. To obtain scale illumination, rotate SCALE ILLUM clockwise until the desired amount of illumination is reached.

f. Probe Compensation (Figure 4-20). Each time the P6104 probes are used with the instrument, probe compensation should be checked and adjusted if necessary. A low capacitance screwdriver should be used. Use the following procedure for adjusting P6104 probe compensation:

(1) Connect P6104 probes to CH 1 and CH 2 vertical inputs.

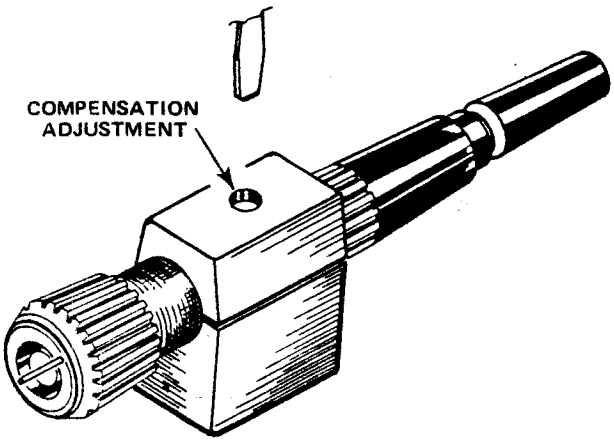

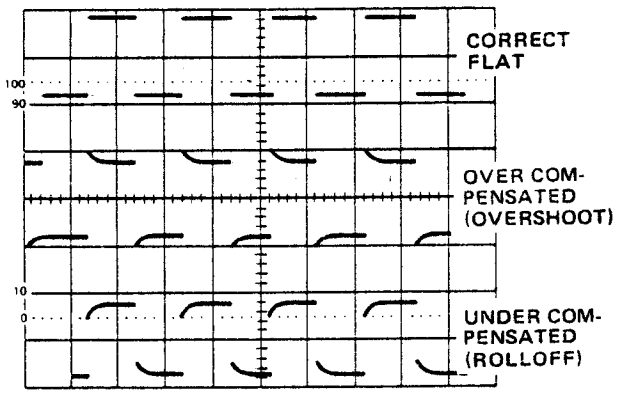

Figure 4-20. Probe compensation.

(2) Set the instrument controls as follows:

VOLTS/DIV	.2 (in 10X probe window)
A AND B TIME/DIV	.2 ms
AC-GND-DC	DC
VERT MODE	CH 1
A SOURCE	CH 1
A COUPLING	DC
HORIZ DISPLAY	A
SLOPE	OUT: +
LEVEL	Adjust as necessary for a stable display

(3) Connect the CH 1 and CH 2 probes to the CALIBRATOR. Adjust the POSITION controls so the top of at least one complete positive pulse is displayed.

(4) Adjust CH 1 probe compensation through hole in compensation box for the best flat top display.

(5) Set A SOURCE and VERT MODE to CH 2.

(6) Repeat step (4) above for CH 2.

4-8. NORMAL OPERATION. The following procedures demonstrate the operation of the controls, connectors, and indicators. These procedures may also be used for operator familiarization or as an instrument functional check. Before starting, preset the controls as listed in paragraph 4-7. a., connect probes to CH 1 and CH 2, and connect the probes to the CALIBRATOR. Where vertical channel and horizontal sweep or trigger controls are duplicated, only one set of controls is demonstrated. The procedures are intended to be preformed in the sequence listed.

a. Beam Finder. Demonstrate BEAM FINDER operation as follows:

(1) Position the CH 1 display off screen with the vertical POSITION control.

(2) Push in and hold BEAM FINDER. The display should return to on screen. Adjust POSITION to center the trace vertically and horizontally. Release BEAM FINDER. The trace should be on screen.

(3) Adjust INTEN until the display disappears.

(4) Push in and hold BEAM FINDER. The display should reappear. Release BEAM FINDER. Readjust INTEN for a visible display.

b. Intensity and Focus. Demonstrate INTEN and FOCUS operation as follows:

(1) Rotate INTEN between its maximum clockwise and counterclockwise positions. The display should vary from a blooming intensity to no display. Reset INTEN to a comfortable viewing level.

(2) Rotate FOCUS between its maximum clockwise and counterclockwise positions. The display should become blurred on either side of an optimum control setting. Reset the control for the best focused display.

c. Vertical Deflection System. Demonstrate the operation of the controls in the vertical deflection system as follows:

(1) Select CH 1 on VERT MODE. There should be one display.

(2) Rotate CH 1 POSITION between its maximum settings. The display should move off screen in both vertical directions. Reset POSITION for a visible display.

(3) Set VERT MODE to ALT. There should be two displays.

(4) Alternately rotate CH 1 and CH 2 POSITION between their maximum settings. Their respective displays should move off screen in both vertical directions. Reset POSITION for two visible displays.

(5) Set A AND B TIME/DIV to 20 ms. The CH 1 and CH 2 traces should be alternately displaying.

(6) Set VERT MODE to CHOP. The CH 1 and CH 2 traces should be simultaneously displayed. Reset A AND B TIME/DIV to 5 ms and VERT MODE to ALT.

(7) Set A SOURCE to LINE. Push in and hold TRIG VIEW. The display should be a sample of the power line trigger signal. Release TRIG VIEW and reset A SOURCE to CH 1.

(8) Set A AND B TIME/DIV to .5 ms and VOLTS/DIV to .5.

(9) Adjust vertical POSITION for one display on each side of the center horizontal graticule line. If the display is not stable, adjust A LEVEL. The display should be two vertical divisions in amplitude and each pulse width one division wide (corresponds to a one volt peak to peak, one kilohertz square wave CALIBRATOR output).

(10) Set AC-GND-DC to GND and note the position of the baseline trace. Set AC-GND-DC to AC. The display should be equally displayed on each side of the baseline trace position. Reset AC-GND-DC to DC.

(11) Adjust horizontal POSITION so the display starts at the left vertical graticule line.

(12) Push in INVERT and adjust CH 2 vertical POSITION for an on screen display. The CH 2 display should be inverted. Push in INVERT again (releases it) and readjust POSITION for separated dual displays.

(13) Rotate CH 2 VAR to its fully counterclockwise position. The UNCAL indicator should light and the display should decrease in vertical size to 0.8 divisions or less. Return VAR to its fully clockwise detent position.

(14) Set A AND B TIME/DIV to X-Y and VERT MODE to CH 2 (same as OR X-Y). The two dot display should form a 45 degree angle to the horizontal.

(15) Set CH 1 AC-GND-DC to GND. The display should be two dots in a vertical line. Reset control to DC.

(16) Set CH 2 AC-GND-DC to GND. The display should be two dots in a horizontal line. Reset control to DC.

(17) Set A AND B TIME/DIV to .5 ms and VERT MODE to ALT.

NOTE

At this point there should be a dual display with two divisions of vertical amplitude and one division pulse widths. The displays should be somewhat centered in the upper and lower halves of the screen. If not, reset the vertical deflection system controls and A AND B TIME/DIV until this display is obtained before proceeding to the horizontal deflection system procedures.

d. Horizontal Deflection System. Demonstrate the operation of the controls in the horizontal deflection system (sweep) as follows:

(1) Normal and Magnified Sweep.

(a) Set VERT MODE to CH 1.

(b) Rotate A AND B TIME/DIV one or two positions on either side of .5 ms. The display sweep rate should change. Reset A AND B TIME/DIV to .1 ms. The display pulse width should be five divisions.

(c) Rotate VAR to its fully counterclockwise position. The UNCAL indicator should light and the display pulse width should decrease to two divisions or less. Return VAR to its fully clockwise detent position.

(d) Set A AND B TIME/DIV to 1 ms and push in X10 MAG. The X10 MAG indicator should light and the display pulse width should expand to five divisions. The magnified display is the center one division (0.5 division on either side of the center vertical graticule line) of the normal display.

(e) Push in X10 MAG again (releases it).

(2) Mixed Sweep.

(a) Set A AND B TIME/DIV to .5 ms, HORIZ DISPLAY to MIXED, and DELAY TIME POS to 5.0.

(b) Pull out on the A AND B TIME/DIV outer ring, rotate B TIME/DIV to .2 ms, and release the outer ring. The display should show a sweep rate change at about the center of the display. The first five divisions of the display is at the A sweep rate and the last five divisions of the display is at the B sweep rate.

(c) Rotate DELAY TIME POS on each side of the 5.0 setting and observe the movement of the starting point of the B sweep rate portion of the display. Reset DELAY TIME POS to 5.0.

(3) A Intensified Sweep.

(a) Set HORIZ DISPLAY to A INTEN and B TIME/DIV to .1 ms. The intensified portion of the display is the B sweep time.

(b) Rotate DELAY TIME POS on either side of 5.0 and observe the movement of the intensified portion of the display.

(4) B Delayed Sweep.

(a) Set HORIZ DISPLAY to B DLY'D. The display is the intensified portion of the display seen in (3) (a) above.

(b) Rotate B TIME/DIV one position on either side of .1 ms. The display sweep rate should change. Reset B TIME/DIV to .1 ms.

(5) Normal Trigger.

(a) Set HORIZ DISPLAY to A and TRIG MODE to NORM. Rotate A LEVEL for a stable display. Adjust horizontal POSITION so display starts at the left vertical graticule line. Note that the display starts with a positive pulse.

(b) Push in A SLOPE (IN:—). Note that the display now starts with a negative pulse. Push in SLOPE again to reset it to the OUT: + position.

(6) Single Sweep Trigger.

(a) Adjust A LEVEL so display is just barely stabilized.

(b) Set A COUPLING to LF REJ.

(c) Push and release SGL SWP. The previously selected TRIG MODE should cancel.

(d) While watching the TRIG READY indicator and the display, push in and release SGL SWP. The indicator should have blinked and a display should have flashed across the screen. This indicates the trigger circuit was reset and then triggered.

(e) Disconnect the CH 1 probe tip from the CALIBRATOR and push in SGL SWP again. The TRIG READY indicator should be lit. While watching the TRIG READY indicator and the display, touch the CH 1 probe tip to the CALIBRATOR. The TRIG READY indicator should have gone out as the display flashed across the screen.

(f) Reset A COUPLING to AC and TRIG MODE to AUTO.

(g) Disconnect the probe tips from the CALIBRATOR.

(7) Low Frequency Rejection Trigger.

(a) Set A SOURCE to LINE and A AND B TIME/DIV to 10 ms.

(b) Push in and hold TRIG VIEW. The display should be a sample of the power line trigger input. Set A COUPLING to LF REJ. The display should disappear showing that the low frequency trigger rejection circuitry is working.

4-9. INSTRUMENT TURN OFF. The instrument is turned off by pushing in on the POWER push button. When turned off, the ON indicator should extinguish.

4-10. APPLICATIONS. The following information describes procedures and techniques for making specific measurements.

a. Peak to Peak Amplitude Measurement (Figure 4-21). Measure the peak to peak amplitude of a signal by multiplying the vertical deflection (in divisions) by the VOLTS/DIV setting.

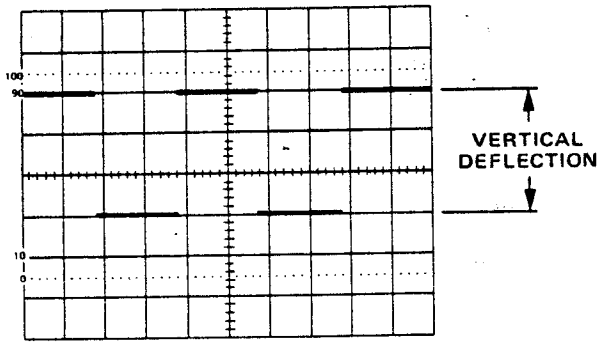

EXAMPLE:

VERTICAL DEFLECTION	X	VOLTS/DIV SETTING	=	AMPLITUDE
3 DIVISIONS	X	.5 VOLTS/ DIVISION	=	1.5 VOLTS PEAK-TO-PEAK

(1907-27) 2237-19

Figure. 4-21. Example of peak to peak voltage measurement.

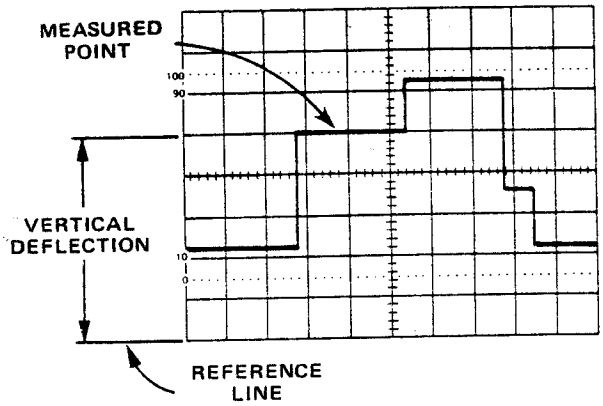

EXAMPLE:

VERTICAL DEFLECTION FROM REFERENCE LINE TO MEASURED POINT	X	VOLTS/DIV SETTING	=	INSTANTANEOUS AMPLITUDE
5 DIVISIONS	X	10 MILLIVOLTS/ DIVISION	=	50 MILLIVOLTS

(1907-28) 2237-20

Figure 4-22. Example of instantaneous voltage measurement.

b. Instantaneous Amplitude Measurement (Figure 4-22). Measure the amplitude of any point on a waveform with respect to ground as follows:

(1) Set AC-GND-DC to DC.

(2) Apply signal to be measured to either vertical input connector. Set VERT MODE to channel being used.

(3) Obtain a stable display.

(4) Set AC-GND-DC to GND. Position trace to a reference line.

(5) Set AC-GND-DC to DC. If waveform appears above reference line, voltage is positive. If waveform appears below reference line, voltage is negative.

(6) Measure vertical difference (in divisions) between reference line and desired point on waveform and multiply by VOLTS/DIV setting.

c. Dual Trace Phase Difference Measurement (Figure 4-23). Phase comparisons between two signals of the same frequency can be made using the dual trace feature. This method can be used up to the frequency limit of the vertical system and is usually more accurate and easier to use then the X-Y method. To make the comparison, use the following procedure:

(1) Set both AC-GND-DC to AC.

(2) Set VERT MODE to CHOP or ALT. (CHOP is more suitable for low frequency signals; ALT is more suitable for high frequency signals.) Position both traces to center horizontal graticule line.

(3) Set A SOURCE to CH 1.

(4) Connect reference signal to CH 1 input connector and comparison signal to CH 2 input connector using coaxial cables or probes which have equal time delay.

(5) If signals are of opposite polarity, push INVERT button to invert CH 2 display. (Signals may be of opposite polarity due to 180° phase difference; if so, take this into account in final calculation.)

(6) Set CH 1 and CH 2 VOLTS/DIV and their associated VAR controls so displays are equal and about five divisions in amplitude.

(7) Set TIME/DIV to a sweep rate which displays about one cycle of reference waveform.

(8) Set VAR TIME/DIV until one cycle of reference signal (CH 1) occupies exactly 8 divisions between the second and tenth graticule lines.

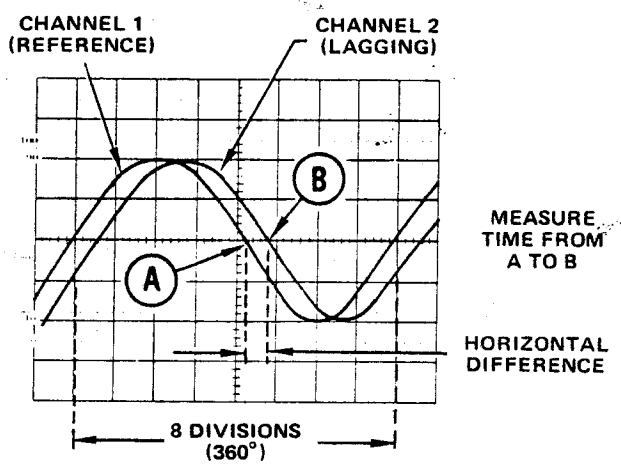

EXAMPLE:

HORIZONTAL DIFFERENCE (A TO B) X DEGREES/ DIVISION = PHASE DIFFERENCE

0.6 DIVISION X 45°/ DIVISION = 27°

(465/DM-0-15) 2237-21

Figure 4-23. Example of dual trace phase difference measurement

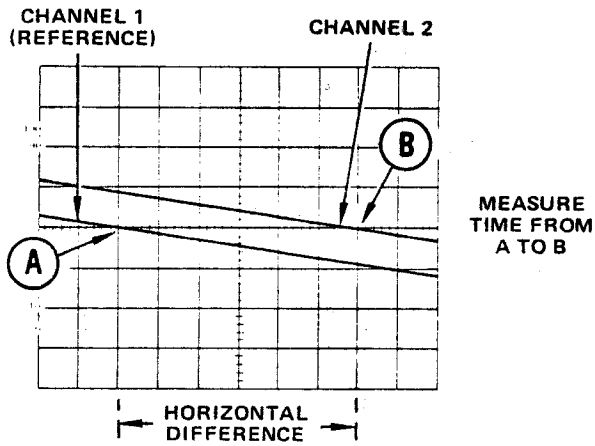

EXAMPLE:

HORIZONTAL DIFFERENCE (A TO B) X DEGREES/ DIVISION = PHASE DIFFERENCE

6 DIVISIONS X 4.5°/ DIVISION = 27°

(465/DM-0-16)2237-22

Figure 4-24. Example of high resolution phase difference measurement.

NOTE

Each division of graticule represents 45° of cycle (360° ÷ 8 divisions = 45°/division). Therefore; the sweep rate can be stated in terms of degrees as 45°/division.

(9) Measure horizontal difference (in divisions) between corresponding points on waveforms.

(10) Multiply difference (in divisions) by 45°/ division (sweep rate) to obtain exact amount of phase difference.

d. High Resolution Phase Difference Measurement (Figure 4-24). For phase differences less than 45°, measurement accuracy is increased by using X10 MAG as follows:

(1) Perform steps (1) through (8) of 4-10 c above.

(2) Center the measurement points on the vertical graticule line.

(3) Push in X10 MAG. Sweep rate is now 4.5°/ division (45°/division ÷ 10).

(4) Slightly reset horizontal POSITION control to move measurement points within graticule area.

(5) Measure horizontal difference (in divisions) between corresponding points on waveforms.

(6) Multiply difference by magnified sweep rate (4.5°/division).

e. Time Duration and Frequency Measurement (Figure 4-25). Measure the time duration between two points on a waveform by multiplying the horizontal distance (in divisions) between the points by the TIME/DIV setting. Frequency is the reciprocal of the time duration measurement of one cycle.

f. Rise Time Measurement (Figure 4-26). Rise time measurements are made in the same manner as time duration measurements, except the horizontal measurements are made between the 10% and 90% points of the waveform amplitude (see percentage markings on the left edge of the graticule) as follows:

(1) Set VOLTS/DIV and its associated VAR control for a 5 division display.

(2) Adjust vertical POSITION so display is between the 0% and 100% lines.

(3) Measure horizontal distance (divisions) between 10% and 90% points on waveform (points A and B).

g. Differential Time Measurement. Differential time measurements can be made using either the A INTENS, B DLY'D, or MIXED HORIZ DISPLAY modes.

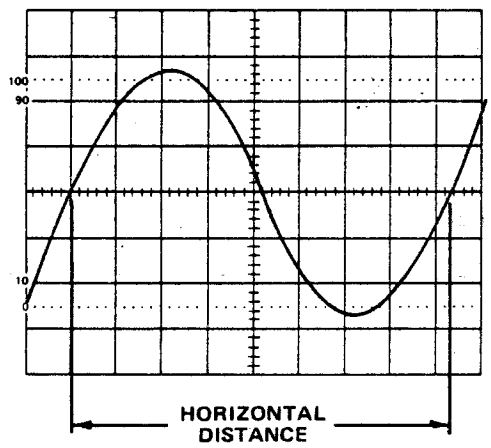

EXAMPLE:

HORIZONTAL DISTANCE X TIME/DIV SETTING = TIME DURATION

8.3 DIVISIONS X 2 MILLISECONDS/DIVISION = 16.6 MILLISECONDS

$\frac{1}{\text{TIME DURATION}}$ = FREQUENCY

$\frac{1}{\text{16.6 MILLISECONDS}}$ = 60 HERTZ

(1738-20) 2237-23

Figure 4-25. Example of time duration and frequency measurement

(1) A Intensified Differential Time Measurement (Figure 4-27). Use the following procedure to make differential time measurements using the A INTEN mode:

(a) Set A TIME/DIV and horizontal POSITION control to locate both time measurement points within graticule area.

(b) Set HORIZ DISPLAY to A INTEN and B SOURCE to STARTS AFTER DELAY.

(c) Pull out and set B TIME/DIV for the shortest useable intensified display zone.

(d) Use DELAY TIME POS control to move the left edge of intensified zone to just touch the first time measurement point (point A). Note DELAY TIME POS (1st DTP setting) setting.

(e) Use DELAY TIME POS control to move left edge of intensified zone to just touch the second time measurement point (point B). Note DELAY TIME POS (2nd DTP setting) setting.

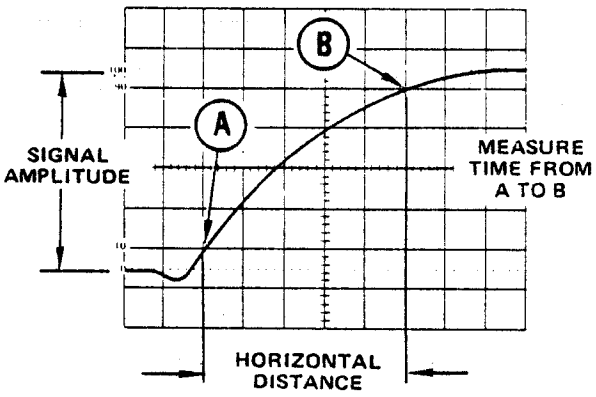

EXAMPLE:

HORIZONTAL DISTANCE (A TO B) X TIME/DIV SETTING = RISE TIME

5 DIVISIONS X 1 MICROSECOND/DIVISION = 5 MICROSECONDS

(465/DM-0-13) 2237-24

Figure 4-26. Example of rise time measurement.

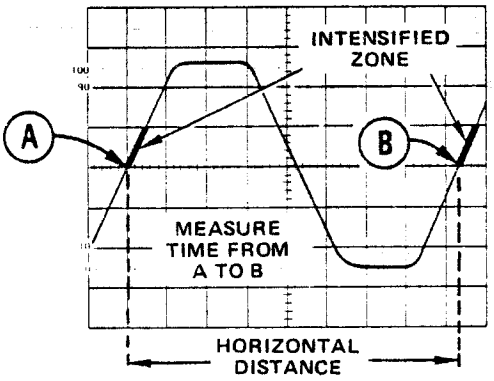

EXAMPLE:

2ND DTP SETTING − 1ST DTP SETTING X A TIME/DIV SETTING = TIME DIFFERENCE

9.56 − 1.23 X 2 MILLISECONDS = 16.66 MILLISECONDS

(465/DM-0-9) 2237-25

Figure 4-27. Example of time duration measurement using A INTEN mode.

(2) B Delayed Differential Time Measurement (Figure 4-28). Use the following procedure to make differential time measurements using the B DLY'D mode:

(a) Set A TIME/DIV and horizontal POSITION control to locate both time measurement points within graticule area (see Figure 4-28A).

(b) Set HORIZ DISPLAY to A INTEN and B SOURCE to STARTS AFTER DELAY.

(c) Pull out and set B TIME/DIV for the shortest usable intensified display zone.

(d) Turn DELAY TIME POS so that first time measurement point (point A) is in center of intensified zone.

(e) Set HORIZ DISPLAY to B DLY'D.

(f) Slightly reset DELAY TIME POS to move first time measurement point to the closest vertical graticule line (see Figure 4-28B). Note DELAY TIME POS (1st DTP setting) setting.

(g) Set HORIZ DISPLAY to A INTEN.

(h) Repeat step (d) for the second time measurement point (Point B).

(i) Set HORIZ DISPLAY to B DLY'D.

(j) Slightly reset DELAY TIME POS to move second time measurement point to the same vertical graticule line used in step (f). Note DELAY TIME POS (2nd DTP setting) setting.

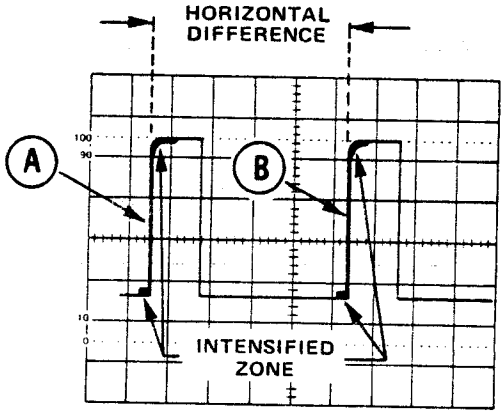

A. A INTENSIFIED DISPLAY

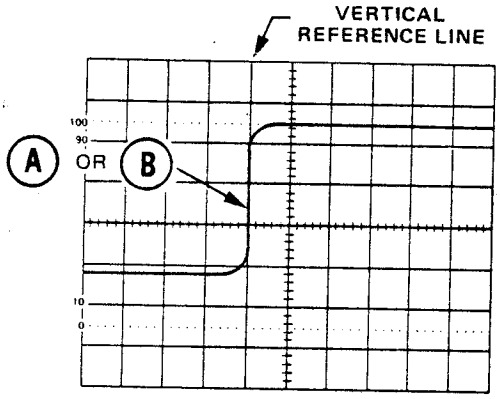

B. B DELAYED DISPLAY

EXAMPLE:

2ND DTP SETTING	−	1ST DTP SETTING	X	A TIME/DIV SETTING	=	TIME DIFFERENCE
5.57	−	0.88	X	.2 MICROSECONDS	=	0.938 MILLISECONDS

(1907-29) 2237-26

Figure 4-28. Example of time duration measurement using B DLY'D mode.

For Service Manuals Contact
MAURITRON TECHNICAL SERVICES
8 Cherry Tree Rd, Chinnor
Oxon OX9 4QY
Tel:- 01844-351694 Fax:- 01844-352554
Email:- enquiries@mauritron.co.uk

WARNING

THE FOLLOWING SERVICING INSTRUCTIONS ARE FOR USE BY QUALIFIED PERSONNEL ONLY. TO AVOID PERSONAL INJURY, DO NOT PERFORM ANY SERVICING OTHER THAN THAT CONTAINED IN OPERATING INSTRUCTIONS UNLESS YOU ARE QUALIFIED TO DO SO.

SECTION V
MAINTENANCE INSTRUCTIONS

5-1. OPERATIONAL CHECKOUT (PERFORMANCE CHECK). The operational checkout is a performance check of the 465M using test equipment listed in Table 2-1. Satisfactory completion of the checkout procedures indicates that the instrument should perform as listed in the Performance Requirement column in Table 1-1. The Operational Checkout procedure (Performance Check) is contained in Table 5-1 and is structured as follows:

a. The STEP column lists the sequential steps of the procedure.

b. The PROCEDURE column lists the instructions and illustrations necessary to setup and perform the procedure.

c. The PERFORMANCE REQUIREMENT column lists the desired result of the test.

d. The control settings listed in step 1 are used as initial settings for each numbered procedure step. Therefore, the numbered procedure steps may be performed individually or in any order by first performing step 1, then any other desired step. This feature is useful for testing the instrument after making repairs or replacing components in individual sections of the instrument.

CAUTION

Do not connect the instrument to a power source until instructed to do so in a procedural step. This will prevent instrument damage in the event the LINE RANGE Selector switch or other controls are not properly set.

Table 5-1. Operational Checkout Procedures (Performance Check)

Step	Procedure	Performance Requirement
1.	**Preliminary Procedure**	
a.	To place the 465M into a basic operating mode:	
	Check that the fuse value and Line Voltage Selector switch setting (on the rear panel) are set for the available power input voltage. Unless otherwise specified, the instrument is shipped from the factory with the switch set for 116 V and a fuse value of 1 A/250 V (to operate from a power input voltage source within a range of 100 to 132 volts). If the Line Selector switch setting is changed to the 232 V position (for operation from a power input voltage source within a range of 200 to 264 volts) the fuse value and type must be changed to 0.5 A, fast-blow.	
	Then set the 465M controls as stated in the following list (set both vertical channels the same and both horizontal sweeps the same unless otherwise indicated).	
	POSITION (vertical) — Midrange VOLTS/DIV — 5 m (1X probe window) VAR (VOLTS/DIV) — Fully clockwise (detent) AC-GND-DC — DC VERT MODE — CH 1 INVERT — Out (normal) INTEN — Midrange	

For Service Manuals Contact
MAURITRON TECHNICAL SERVICES
8 Cherry Tree Rd, Chinnor
Oxon OX9 4QY
Tel:- 01844-351694 Fax:- 01844-352554
Email:- enquiries@mauritron.co.uk

Table 5-1. Operational Checkout Procedures (Performance Check)—Continued

Step	Procedure	Performance Requirement
1. (continued)		
	SCALE ILLUM — Fully counterclockwise HORIZ DISPLAY — A A AND B TIME/DIV — .1 ms VAR (A AND B TIME/DIV) — Fully clockwise (detent) DELAY TIME POS — 0.0 X10 MAG — Out (off) A TRIGGER HOLDOFF — NORM (detent) LEVEL — Midrange of + side of control (adjust as necessary throughout procedure) SLOPE — Out + COUPLING — AC SOURCE — NORM TRIG MODE — AUTO POSITION (horizontal) — Midrange	
	Next, remove the 465M top cover. Connect the 465M power cord plug to the desired power input voltage source. Pull the 465M POWER switch to ON.	
	NOTE *Allow approximately 5 minutes warmup time before starting any step of the Operational Checkout procedure.*	
	Set CH 1 AC-GND-DC to GND. Adjust INTEN and FOCUS for a low-intensity well-defined trace. Position the trace to the center horizontal graticule line, and if necessary adjust TRACE ROTATION so the trace is parallel with the graticule line. Return AC-GND-DC to DC.	
2.	**Regulation**	
	NOTE *Step 2 is optional and may be partially or totally omitted unless there is an individual reason to verify the 465M operation over all power input voltage ranges. To completely check the 465M for the power input voltage ranges of 100 to 132 volts and 200 to 264 volts requires variable power input voltage sources that will cover both ranges. An alternative method is to check that the individual 465M power supplies are within limits with the 465M powered from the available power input source voltage, and then proceed to step 3.*	
a.	Set the Digital Multimeter to read 50 volts dc.	
b.	Connect the meter Low lead to ground and the Volts lead to the +32 V (regulated) test point.	

Table 5-1. Operational Checkout Procedures (Performance Check)—Continued

Step	Procedure	Performance Requirement
2. (continued)		
c.	Check (using the following chart) the 465M power supplies regulation over the desired power input voltage ranges (vary the power input source voltage and alter meter settings and connections as required).	

POWER INPUT VOLTAGE	POWER SUPPLY	
100 V to 132 V or 200 V to 264 V	+32 V +5 V −5 V	+31.9 V to +32.1 V +4.97 V to +5.03 V −4.97 V to −5.03 V
(Change Line Voltage Selector switch setting and fuse as appropriate)		

d.	Set the 465M POWER switch to OFF, disconnect the meter leads from the 465M and the 465M line cord plug from the power input voltage source. Change the fuse value and Line Voltage Selector switch setting for the available source of power input voltage to be used for the rest of this procedure (116 V for a 100 V to 132 V range, or 232 V for a 200 to 264 V range). Refer to step 1, Preliminary Procedure before performing any other steps.	
3.	**Calibrator Output**	
a.	Preset the 465M per step 1, then set POWER to OFF.	
b.	Connect a Digital Multimeter (preset to read +1 V dc) to the CALIBRATOR output connector.	
c.	Connect a shorting jumper between TP376 and TP386 (a miniature alligator clip is suitable).	
d.	Turn the 465M on and allow at least 5 minutes warm-up.	
e.	Check the Digital Multimeter reading.	+0.99 V dc to +1.01 V dc
f.	Disconnect the Digital Multimeter leads, turn the 465M power off, and disconnect the shorting jumper from TP376 and TP386.	
g.	Turn the 465M power on and use a 1X probe (465M standard accessory) to connect the 465M channel 1 input to the CALIBRATOR output terminal.	
h.	Preset the 465M controls as follows: Deflection Factor .2 V Vertical Input Coupling DC Sweep Speed .1 ms	
i.	Check the calibrator waveform characteristics.	Square wave of 5 divisions peak-to-peak at 1 kHz within 0.1 kHz; risetime, less than 1 μs; symmetry, within 25%.

Table 5-1. Operational Checkout Procedures (Performance Check)—Continued

Step	Procedure	Performance Requirement
4.	**Vertical Deflection Factor Accuracy.**	
a.	Connect the equipment as follows:	

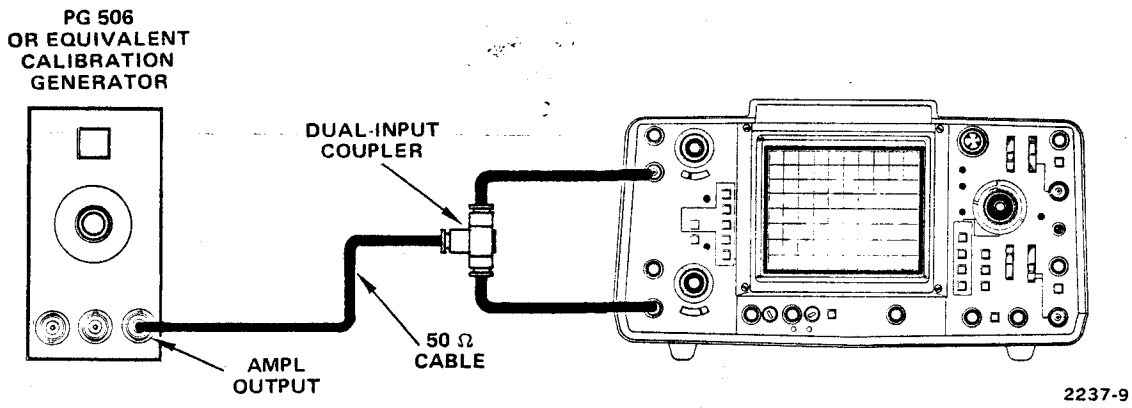

b.	Preset controls as listed in step 1.	
c.	Check CH 1 and CH 2 vertical deflection factors at the following settings (VERT MODE must be set to channel being tested):	

Calibration Generator Setting	VOLTS/DIV Setting (in X1 probe window)	Vertical Display (in divisions)
20 mV	5 mV	3.92 to 4.08
50 mV	10 mV	4.90 to 5.10
0.1 V	20 mV	4.90 to 5.10
0.2 V	50 mV	3.92 to 4.08
0.5 V	.1 V	4.90 to 5.10
1.0 V	.2 V	4.90 to 5.10
2.0 V	.5 V	3.92 to 4.08
5.0 V	1 V	4.90 to 5.10
10.0 V	2 V	4.90 to 5.10
20.0 V	5 V	3.92 to 4.08

5.	**Variable Vertical Deflection Factor Range.**	
a.	Connect the equipment as shown in step 4, part a.	
b.	Preset the 465M as listed in step 1; then reset CH 1 VOLTS/DIV to 10 m.	
c.	Set the calibration generator to 50 mV.	4.9 to 5.1 division vertical display.
d.	Rotate CH 1 VOLTS/DIV VAR fully counterclockwise.	2 division or less vertical display.
e.	Set VERT MODE to CH 2 and CH 2 VOLTS/DIV to 10 m.	4.9 to 5.1 division vertical display.
f.	Rotate CH 2 VOLTS/DIV VAR fully counterclockwise.	2 division or less vertical display.
g.	Reset CH 1 and CH 2 VOLTS/DIV VAR fully clockwise (in detent position).	

Table 5-1. Operational Checkout Procedures (Performance Check)—Continued

Step	Procedure	Performance Requirement
6.	**X Gain.**	
a.	Connect the equipment as shown in step 4, part a.	
b.	Preset the 465M as listed in step 1; then reset as follows: CH 2 AC-GND-DC — GND VERT MODE — CH 2 A AND B TIME/DIV — X-Y	
c.	Set the calibration generator for 20 mV (INTEN may need to be increased).	3.88 to 4.12 division horizontal display.
d.	Set CH 1 AC-GND-DC to AC.	3.88 to 4.12 division horizontal display.
7.	**Trigger View Gain.**	
a.	Connect the equipment as follows:	

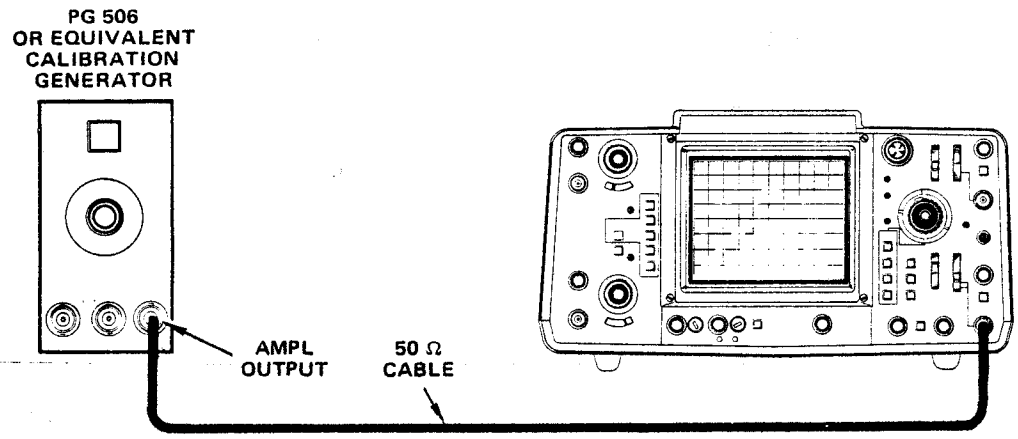

2237-10

b.	Preset the 465M as listed in 1; then reset as follows: CH 1 VOLTS/DIV — .1 A SOURCE — EXT A LEVEL — 0 A AND B TIME/DIV — .2 ms	
c.	Set calibration generator for 0.2 V.	
d.	Push in and hold TRIG VIEW, observe display, then release TRIG VIEW.	1.4 to 2.6 division vertical display.
e.	Set instrument controls as follows: VOLTS/DIV — 1 A SOURCE — EXT ÷ 10	

Table 5-1. Operational Checkout Procedures (Performance Check)—Continued

Step	Procedure	Performance Requirement
7. (continued)		
f.	Set calibration generator to 2 V.	
g.	Repeat step 7, part d.	
8.	**Channel Position Effect.**	
a.	Connect the equipment as follows:	

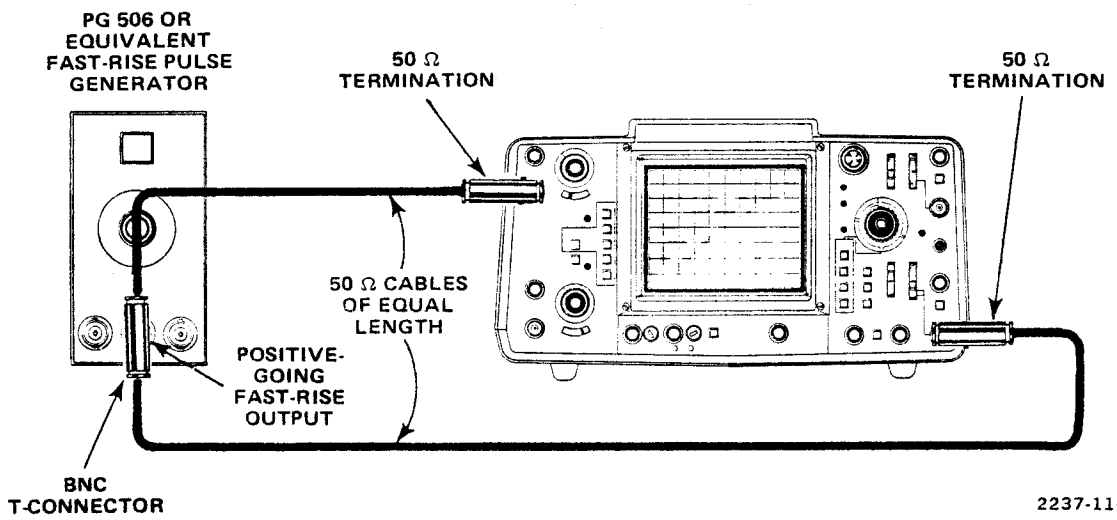

b.	Preset the 465M as listed in step 1; then, reset as follows: CH 1 VOLTS/DIV 20 m A AND B TIME/DIV .05 μs	
c.	Set calibration generator for a 5-division display at 100 kilohertz.	
d.	Rotate CH 1 vertical POSITION to observe the top of the waveform at the top horizontal graticule line then rotate POSITION and observe top of waveform at the bottom horizontal graticule line.	The front corner of the waveform has no more than 0.3 division peak-to-peak aberrations.
e.	Set A SLOPE to − (IN).	
f.	Change the calibration generator output to the negative-going fast rise output.	
g.	Repeat step 8, parts c and d.	
h.	Change the calibration generator output cable from CH 1 to CH 2.	
i.	Set the instrument controls as follows: CH 2 VOLTS/DIV 20 m VERT MODE CH 2	
j.	Repeat step 8, parts c and d using CH 2 vertical POSITION.	

Table 5-1. Operational Checkout Procedures (Performance Check)—Continued

Step	Procedure	Performance Requirement
8. (continued)		
k.	Set A SLOPE to + (OUT).	
l.	Change the calibration generator output to the positive going fast rise output.	
m.	Repeat step 8, parts c and d using CH 2 vertical position.	
9.	**Rise Time.**	
a.	Connect the equipment as shown in step 8, part a.	
b.	Preset controls as listed in step 1, then reset as follows: A AND B TIME/DIV .05 μs CH 1 VOLTS/DIV 20 m	
c.	Set calibration generator for a 5-division display at 1 megahertz.	
d.	Adjust vertical POSITION to place display between the 0 and 100% marks on the graticule.	
e.	Set X10 MAG to the In position (on).	
f.	Measure the time duration of the positive going portion of the display between 10 and 90% markers on the graticule.	3.5 nanoseconds (0.7 division) or less.
g.	Change the calibration generator output from CH 1 to CH 2.	
h.	Set controls as follows: CH 2 VOLTS/DIV 20 m VERT MODE CH 2 X10 MAG Out (off)	
i.	Repeat step 9, parts c through f.	
10.	**Cascaded Sensitivity and Bandwidth.**	
a.	Connect the equipment as follows:	

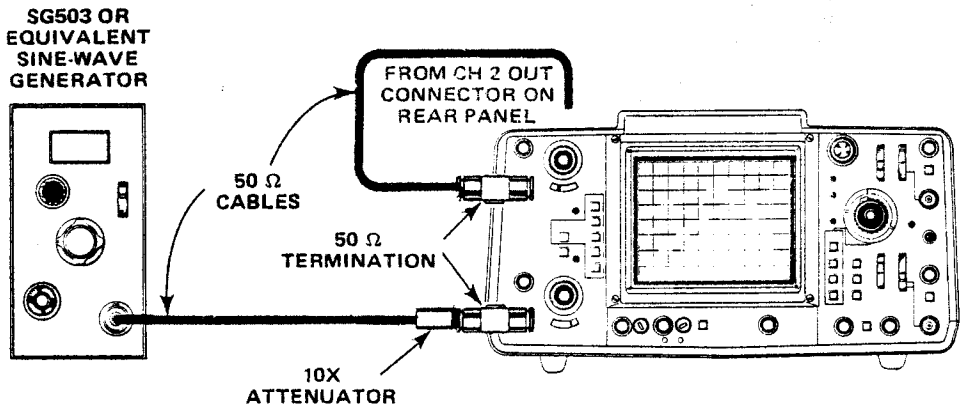

2237-12

Table 5-1. Operational Checkout Procedures (Performance Check)—Continued

Step	Procedure	Performance Requirement
10. (continued)		
b.	Preset controls as listed in step 1, then reset as follows: VERT MODE — CH 2 A AND B TIME/DIV — .2 ms	
c.	Set sine-wave generator for a 1-division 50 kilohertz display.	
d.	Set VERT MODE to CH 1.	3.5 to 6.5 division vertical display.
e.	Set sine-wave generator for a 5-division display (may need to insert a 10X attenuator between 50 ohm BNC cable and 50 ohm termination).	
f.	Set sine-wave generator to 40 megahertz.	3.5 division or more vertical display.
11.	**Channel 1, Channel 2, and X Bandwidth.**	
a.	Connect equipment as follows:	

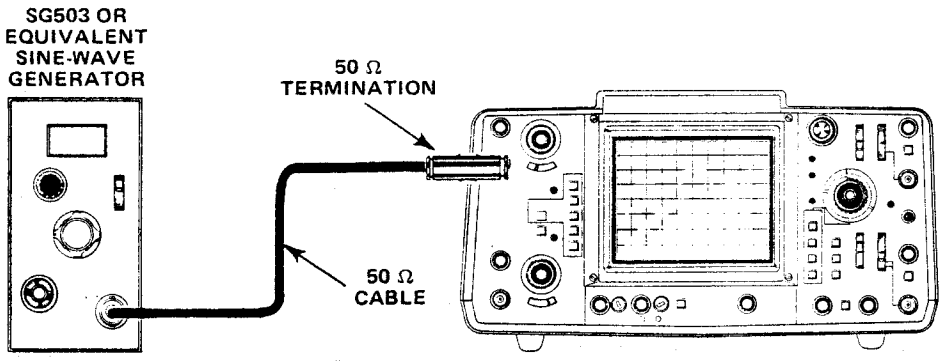

2237-13

b.	Preset controls as listed in step 1, then reset A AND B TIME/DIV to 0.5 μs.	
c.	Set sine-wave generator to 3 megahertz and adjust for a 6-division display.	
d.	Set sine-wave generator to 100 megahertz.	4.2 division or more vertical display.
e.	Change the sine-wave generator output from CH 1 to CH 2.	
f.	Set VERT MODE to CH 2.	
g.	Repeat step 11, parts c through d.	
h.	Change the generator output from CH 2 to CH 1.	

For Service Manuals Contact
MAURITRON TECHNICAL SERVICES
8 Cherry Tree Rd, Chinnor
Oxon OX9 4QY
Tel:- 01844-351694 Fax:- 01844-352554
Email:- enquiries@mauritron.co.uk

Table 5-1. Operational Checkout Procedures (Performance Check)—Continued

Step	Procedure	Performance Requirement
11. (continued)		
i.	Set controls as follows: A AND B TIME/DIV — X-Y CH 1 POSITION — May need adjustment for an on-screen display. INTEN — May need to be increased.	
j.	Set sine-wave generator to 50 kilohertz and adjust for a 6-division horizontal display.	
k.	Set sine-wave generator to 4 megahertz.	4.2 division or more horizontal display.
12.	**Trigger Jitter.**	
a.	Connect the equipment as shown in step 11, part a.	
b.	Preset controls as listed in step 1; then reset as follows: A AND B TIME/DIV — .05 μs X10 MAG — In (on)	
c.	Set sine-wave generator to 100 megahertz and adjust for a 3-division display.	
d.	Adjust A LEVEL for a display with minimum horizontal displacement (jitter).	0.1 division or less, plus trace width, of horizontal displacement (jitter).
e.	Set controls as follows: VERT MODE — CH 2 HORIZ DISPLAY — B DLY'D	
f.	Change sine-wave generator output from CH 1 to CH 2.	
g.	Repeat step 12, parts c and d using B LEVEL control.	
13.	**Trigger Level Range.**	
a.	Connect the equipment as shown in step 11, part a.	
b.	Preset controls as listed in step 1, part a; then reset as follows: VOLTS/DIV — 1 TIME/DIV — 10 μs	
c.	Set sine-wave generator to 50 kilohertz and adjust for a 4-division display.	

Table 5-1. Operational Checkout Procedures (Performance Check)—Continued

Step	Procedure	Performance Requirement
13. (continued)		
d.	Rotate A LEVEL between its limits.	The display is triggered on the positive going slope of the waveform and free runs at either extreme setting of A LEVEL.
e.	Set A SLOPE to − (IN).	
f.	Rotate A LEVEL between its limits.	The display is triggered on the negative going slope of the waveform and free runs at either extreme setting of A LEVEL.
g.	Set HORIZ DISPLAY to B DLY'D.	
h.	Repeat step 13, parts d through f using B LEVEL and B SLOPE.	The display disappears when not triggered, rather than free running.
14.	**25 MHz Triggering.**	
a.	Connect the equipment as follows:	

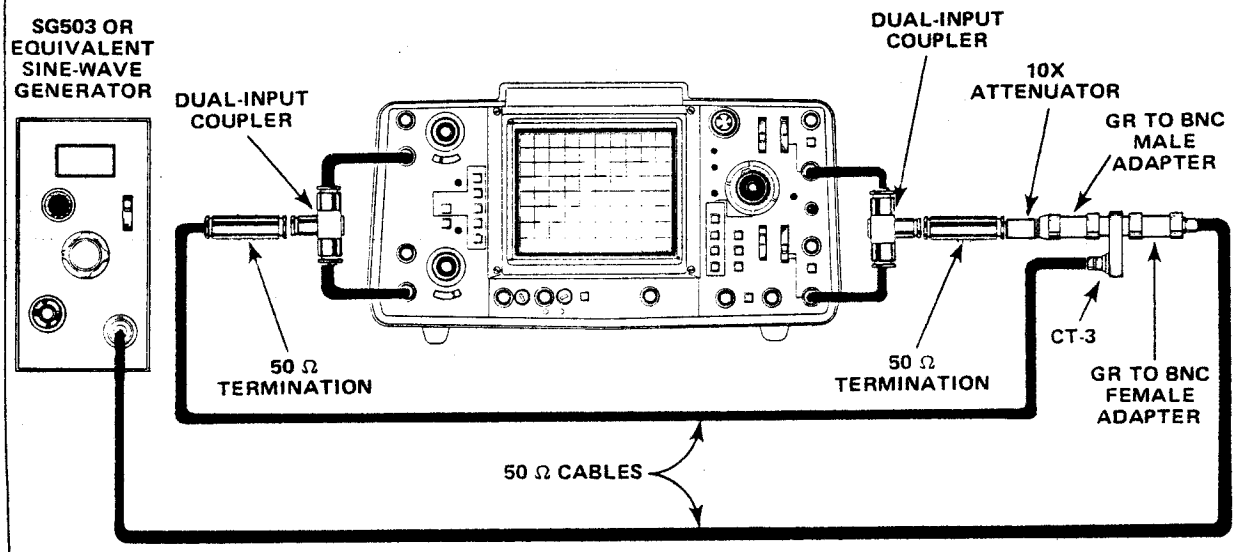

2237-14

b.	Preset controls as listed in step 1; then reset as follows:	

A AND B TIME/DIV	10 μs
COUPLING	DC
SOURCE	EXT
VOLTS/DIV	10 m

Table 5-1. Operational Checkout Procedures (Performance Check)—Continued

Step	Procedure	Performance Requirement
14. (continued)		
c.	Set sine-wave generator to 50 kilohertz and adjust for a 5-division display; then set A AND B TIME/DIV to 0.5 μs and sine-wave generator to 25 megahertz.	
d.	Rotate A LEVEL for a stable display.	A stable display can be obtained.
e.	Set HORIZ DISPLAY to B DLY'D.	
f.	Rotate B LEVEL for a stable display.	A stable display can be obtained.
g.	Set controls as follows: VOLTS/DIV 5 m SOURCE NORM	
h.	Adjust sine-wave generator for a 3-division display.	
i.	Set VOLTS/DIV to 50 m.	
j.	Set each of the following conditions, then rotate B LEVEL to obtain a stable display: *NOTE* *When checking B Sweep control, the A trigger must be stable. To restabilize A Trigger, set HORIZ DISPLAY to A and readjust A LEVEL for a stable display. Then, reset HORIZ DISPLAY to B DLY'D and continue check.*	

B COUPLING	B SOURCE
DC	NORM
LF REJ	NORM
AC	NORM
DC	CH 1
DC	CH 2

k.	SET TRIG MODE to NORM.	
l.	Repeat step 14, part j.	
m.	Set B SLOPE to − (IN).	
n.	Repeat step 14, part j.	
o.	Set TRIG MODE to AUTO.	
p.	Repeat step 14, part j.	
q.	Set B COUPLING to HF REJ and rotate B LEVEL between its limits.	No stable display can be obtained.

For Service Manuals Contact
MAURITRON TECHNICAL SERVICES
8 Cherry Tree Rd, Chinnor
Oxon OX9 4QY
Tel:- 01844-351694 Fax:- 01844-352554
Email:- enquiries@mauritron.co.uk

Table 5-1. Operational Checkout Procedures (Performance Check)—Continued

Step	Procedure	Performance Requirement
14. (continued)		
r.	Set HORIZ DISPLAY to A.	
s.	Repeat step 14, parts j through q. using A LEVEL, A COUPLING, and A SOURCE.	
15.	**100 MHz Triggering.**	
a.	Connect equipment as shown in step 14, part a.	
b.	Preset controls as listed in step 1; then reset as follows: VOLTS/DIV 50 m COUPLING DC SOURCE EXT	
c.	Set sine-wave generator to 50 kilohertz and adjust output for a 3-division display; then set generator to 100 megahertz.	
d.	Set controls as follows: A AND B TIME/DIV 0.5 μs X10 MAG In (on)	
e.	Rotate A LEVEL for a stable display.	A stable display can be obtained.
f.	Set HORIZ DISPLAY to B DLY'D.	
g.	Rotate B LEVEL for a stable display.	A stable display can be obtained.
h.	Set SOURCE to NORM.	
i.	Adjust sine-wave generator for a 1 division display.	
j.	Set each of the following conditions, then rotate B LEVEL to obtain a stable display.	A stable display can be obtained.

B COUPLING	B SOURCE
DC	NORM
LF REJ	NORM
AC	NORM
DC	CH 1
DC	CH 2

k.	Set TRIG MODE to NORM.	
l.	Repeat step 15, part j.	
m.	Set B SLOPE to − (IN).	
n.	Repeat step 15, part j.	
o.	Set TRIG MODE to AUTO.	

Table 5-1. Operational Checkout Procedures (Performance Check)—Continued

Step	Procedure	Performance Requirement
15. (continued)		
p.	Repeat step 15, part j.	
q.	Set HORIZ DISPLAY to A.	
r.	Repeat step 15, part j. using A LEVEL, A COUPLING, and A SOURCE.	
16.	**Low Frequency Trigger.**	
a.	Connect equipment as follows:	

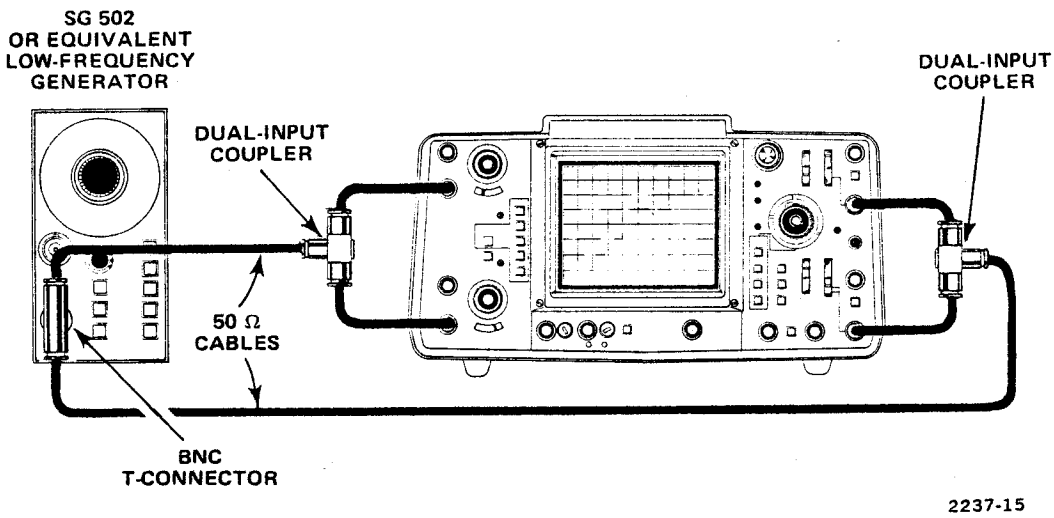

b.	Preset controls as listed in step 1; then reset as follows: A AND B TIME/DIV 10 m TRIG MODE NORM	
c.	Set low frequency sine-wave generator to 30 hertz and adjust for a 3-division display.	
d.	Set VOLTS/DIV to 50 m.	
e.	Rotate A LEVEL to obtain a stable display	A stable display can be obtained.
f.	Set A SLOPE to — (IN).	
g.	Repeat step 16, part e.	
h.	Set A COUPLING to LF REJ.	
i.	Rotate A LEVEL between its limits.	No stable display can be obtained.
j.	Set HORIZ DISPLAY to B DLY'D.	
k.	Repeat step 16, parts e through i. using B LEVEL, B SLOPE, and B COUPLING.	

Table 5-1. Operational Checkout Procedures (Performance Check)—Continued

Step	Procedure	Performance Requirement
17.	**Z-Axis Input.**	
a.	Connect equipment as follows:	

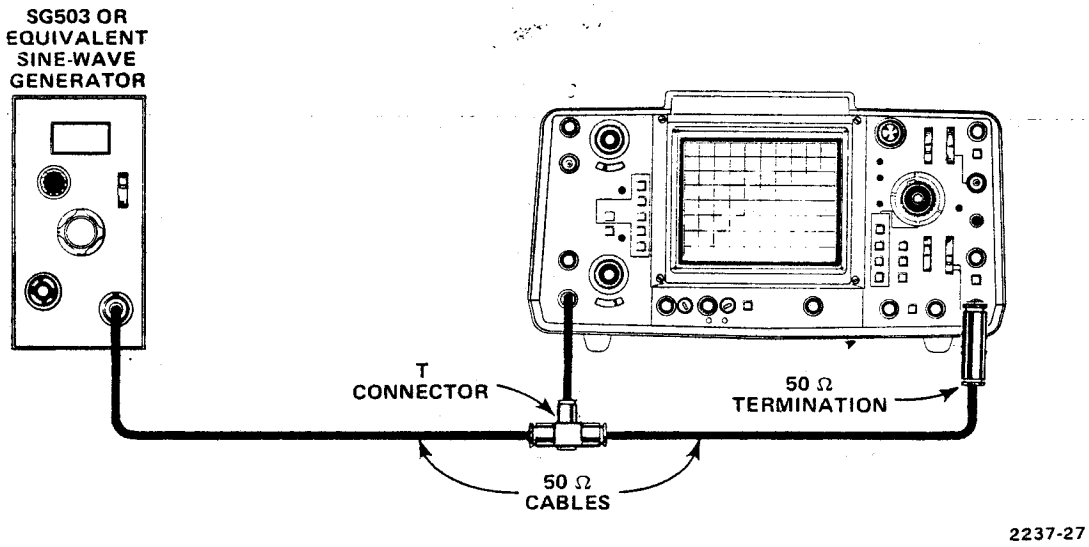

b.	Preset controls as listed in step 1; then reset as follows: VERT MODE — CH 2 CH 2 VOLTS/DIV — 1 A AND B TIME/DIV — .5 ms A SOURCE — EXT	
c.	Set sine-wave generator to 50 kilohertz and adjust for a 5-division display.	
d.	Change the sine-wave generator output (T Connector) from CH 2 to Z-AXIS input on rear panel.	Trace modulation is noticeable at normal intensity.

Table 5-1. Operational Checkout Procedures (Performance Check)—Continued

Step	Procedure	Performance Requirement
18.	**Sweep Rate Accuracy.**	
a.	Connect equipment as follows:	

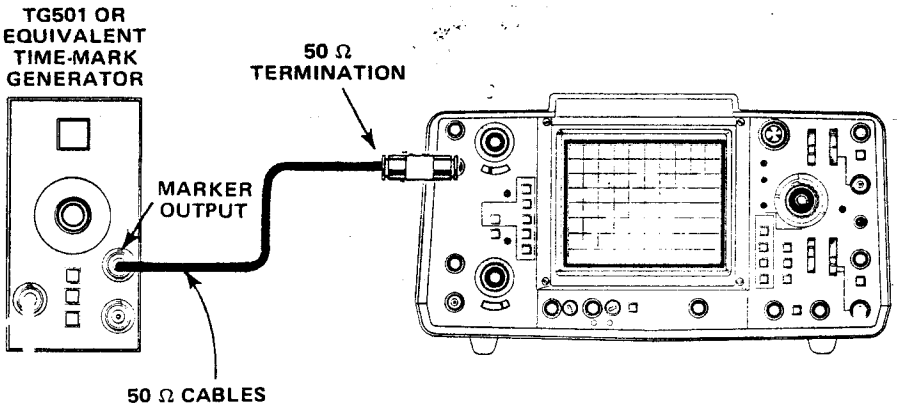

2237-16

b. Preset controls as listed in step 1; then reset as follows:

CH 1 VOLTS/DIV	.5
B SOURCE	STARTS AFTER DELAY

c. Check A TIME/DIV accuracy at the following settings:

TIME/DIV Setting	Time-Mark Generator Output
.05 μs	50 ns
.1 μs	0.1 μs
.2 μs	0.2 μs
.5 μs	0.5 μs
1 μs	1μs
2 μs	2 μs
5 μs	5 μs
10 μs	10 μs
20 μs	20 μs

Performance Requirement: 1 time mark per division within 0.2 division at the 11th vertical graticule line.

Performance Requirement: 1 time mark per division within 0.2 division at the 11th vertical graticule line.

Table 5-1. Operational Checkout Procedures (Performance Check)—Continued

Step	Procedure	Performance Requirement
18. (continued)		

TIME/DIV Setting		Time-Mark Generator Output
50 μs		50 μs
.1 ms		0.1 ms
.2 ms		0.1 ms
.5 ms		0.5 ms
1 ms		1 ms
2 ms		2 ms
5 ms		5 ms
*10 ms		10 ms
*20 ms		20 ms
*50 ms		50 ms
*.1 s	A	0.1 s
*.2 s	SWEEP	0.2 s
*.5 s	ONLY	0.5 s

Performance Requirement: 1 time mark per division within 0.2 division at the 11th vertical graticule line.

***Set TRIG MODE switch to NORM.**

d. Set HORIZ DISPLAY to B DLY'D.

e. Repeat Step 18, part c using B TIME/DIV.

NOTE

If the 11th time marker is not visible, set A TIME/DIV one position counterclockwise from B TIME/DIV (e.g., A set to 1 ms and B to .05 ms).

19. **Variable Sweep Rate Range.**

a. Connect equipment as shown in step 18, part a.

b. Preset controls as listed in step 1; then reset as follows:

CH 1 VOLTS/DIV	.5
A AND B TIME/DIV	2 ms
VAR TIME/DIV	Fully counterclockwise

c. Set time-mark generator for 5 millisecond time markers. — Performance Requirement: 1 division or less between markers.

20. **Magnified Sweep Accuracy.**

a. Connect equipment as shown in step 18, part a.

b. Preset controls as listed in step 1; then reset as follows:

CH 1 VOLTS/DIV	.5
A AND B TIME/DIV	.05 μs

Table 5-1. Operational Checkout Procedures (Performance Check)—Continued

Step	Procedure	Performance Requirement
20. (continued)		
c.	Set time-mark generator for 10 nanosecond time markers.	
d.	Adjust horizontal POSITION to align first time marker with the left vertical graticule line.	
e.	Set X10 MAG to In (on).	
f.	Check magnified A TIME/DIV accuracy at the following settings:	1 time marker per division within 0.3 division at the 11th vertical graticule line; except on .05 μs setting, there is 1 time marker per two divisions.

NOTE

When aligning time markers with a graticule line after a new TIME/DIV selection, do not position the trace beyond alignment with the closest graticule line (see NOTE under Portion of total magnified sweep length to exclude from measurement column below).

TIME/DIV Setting		Time-Mark Generator Setting	Portion of total magnified sweep length to exclude from measurement
0.5 μs		10 ns	First and last 50 nanoseconds
.1 μs		10 ns	
.2 μs		20 ns	
.5 μs		50 ns	
1 μs		0.1 μs	
2 μs		0.2 μs	*NOTE* *To determine the excluded portion of the sweep at .05, .1 and .2 μs, position the beginning (or end) of the sweep at the left (or right) vertical graticule line. Then horizontally POSITION the trace to the left (or right) the following number of time markers to exclude 50 ns of the sweep (be sure X10 MAG is selected): 10 time markers at 0.5 μs; 5 at .1 μs, or 2.5 at .2 μs.*
5 μs		0.5 μs	
10 μs		1 μs	
20 μs		2 μs	
50 μs		5 μs	
.1 ms		10 μs	
.2 ms		20 μs	
.5 ms		50 μs	
1 ms		0.1 ms	
2 ms		0.2 ms	
5 ms		0.5 ms	
10 ms		1 ms	
20 ms		2 ms	
50 ms		5 ms	
*.1 s	A	10 ms	
*.2 s	SWEEP	20 ms	
*.5 s	ONLY	50 ms	

***Change TRIG MODE switch to NORM.**

1 time marker per division within 0.3 division at the 11th vertical graticule line except on .05 μs setting, there is 1 time marker per two divisions.

g.	Set HORIZ DISPLAY to B DLY'D.	

Table 5-1. Operational Checkout Procedures (Performance Check)—Continued

Step	Procedure	Performance Requirement
20. (continued)		
h.	Set A AND B TIME/DIV to 0.5 μs.	
i.	Repeat step 20, parts c through f.	
21.	**Differential Time Measurement Accuracy.**	
a.	Connect equipment as shown in step 18, part a.	
b.	Preset controls as listed in step 1; then reset as follows: CH 1 VOLTS/DIV .5 HORIZ DISPLAY B DLY'D B SOURCE STARTS AFTER DELAY DELAY TIME POS 1.00	
c.	Set time-mark generator for 0.1 microsecond time markers.	
d.	Check each of the following conditions by using step 21, parts e through l.	

Time-Mark Generator Output	A TIME/DIV Setting	B TIME/DIV Setting
.1 μs	.5 μs	.05 μs
1 μs	1 μs	.1 μs
2 μs	2 μs	.2 μs
5 μs	5 μs	.5 μs
10 μs	10 μs	1 μs
20 μs	20 μs	2 μs
50 μs	50 μs	5 μs
0.1 ms	.1 ms	10 μs
0.2 ms	.2 ms	20 μs
0.5 ms	.5 ms	50 μs
1 ms	1 ms	.1 ms
2 ms	2 ms	.2 ms
5 ms	5 ms	.5 ms
10 ms	10 ms	1 ms
20 ms	20 ms	*2 ms
50 ms	50 ms	*5 ms

***Change TRIG MODE to NORM.**

e.	Adjust horizontal POSITION to align 1st marker with the center vertical graticule line.	
f.	Set DELAY TIME POS to 9.00, then adjust it to align the 1st marker with the center vertical graticule line.	8.91 to 9.09 DELAY TIME POS dial reading.
g.	Select new settings from step 21, part d.	
h.	Set DELAY TIME POS to 9.00.	

For Service Manuals Contact
MAURITRON TECHNICAL SERVICES
8 Cherry Tree Rd, Chinnor
Oxon OX9 4QY
Tel:- 01844-351694 Fax:- 01844-352554
Email:- enquiries@mauritron.co.uk

Table 5-1. Operational Checkout Procedures (Performance Check)—Continued

Step	Procedure	Performance Requirement
21. (continued)		
i.	Adjust horizontal POSITION to align 1st marker with the center vertical graticule line.	
j.	Set DELAY TIME POS to 1.00, then adjust it to align the 1st marker with the center graticule line.	0.91 to 1.09 DELAY TIME POS dial reading.
k.	Select new settings from step 21, part d.	
l.	Set DELAY TIME POS to 1.00 and return to step 21, part e.	
22.	**Delay Time Jitter.**	
a.	Connect equipment as shown in step 17, part a.	
b.	Preset controls as listed in step 1; then reset as follows: CH 1 VOLTS/DIV .5 A TIME/DIV 1 ms B TIME/DIV .5 μs DELAY TIME POS 1.00 HORIZ DISPLAY B DLY'D B SOURCE STARTS AFTER DELAY INTEN Visible display	
c.	Set time-mark generator for 1 millisecond time markers.	
d.	Very slightly adjust DELAY TIME POS until leading edge of waveform is visible.	1 division or less horizontal displacement (jitter) of waveform leading edge.
e.	Set DELAY TIME POS to 9.00.	
f.	Repeat step 22, part d.	
23.	**Mixed Sweep Accuracy.**	
a.	Connect equipment as shown in step 18, part a.	
b.	Preset controls as listed in step 1; then reset as follows: B SOURCE STARTS AFTER DELAY HORIZ DISPLAY MIXED VOLTS/DIV .5 A TIME/DIV 1 ms B TIME/DIV .1 ms DELAY TIME POS Fully Clockwise	
c.	Set time-mark generator for 1 millisecond time markers.	
d.	Adjust horizontal POSITION to align 1st time marker with the left vertical graticule line.	1 time marker per division within 0.36 division from the first to the tenth graticule line.

Table 5-1. Operational Checkout Procedures (Performance Check)—Continued

Step	Procedure	Performance Requirement
23. (continued)		
e.	Set DELAY TIME POS fully counterclockwise.	
f.	Set time-mark generator for 0.1 millisecond time markers.	
g.	Adjust horizontal POSITION to align the first time marker with the left vertical graticule line.	1 time marker per division within 0.18 division from the second to the eleventh graticule line.
h.	Set controls as follows: A TIME/DIV .5 μs B TIME/DIV .05 μs	
i.	Set time-mark generator for 50 nanosecond time markers.	
j.	Adjust horizontal POSITION to align the first time marker with the left vertical graticule line.	1 time marker per division within 0.18 division from the second to the eleventh graticule line.
k.	Set DELAY TIME POS fully clockwise.	
l.	Set time-mark generator for 0.5 microsecond time markers.	
m.	Adjust horizontal POSITION to align the first time marker with the left vertical graticule line.	1 time marker per division within 0.36 division from the first to the tenth graticule line.
24.	**+Gate Outputs and A Trigger Holdoff.**	
a.	Preset controls as listed in step 1; then reset A AND B TIME/DIV to 2 μs.	
b.	Connect a monitor oscilloscope to the +A GATE output on the rear panel with a 50 ohm BNC cable and set its TIME/DIV to 5 μs.	5 volt positive pulse within 0.5 volt.
c.	Set oscilloscope under Test A AND B TIME/DIV to 5 μs.	
d.	Set monitor oscilloscope TIME/DIV to 20 μs.	
e.	Adjust monitor oscilloscope VAR TIME/DIV so the negative portion of the pulse is 1-division wide.	
f.	Rotate oscilloscope under test A TRIGGER HOLDOFF fully clockwise.	Negative portion of pulse width expands to 3 divisions or more.
g.	Rotate oscilloscope under test A TRIGGER HOLDOFF fully counterclockwise into the NORM detent.	
h.	Set monitor oscilloscope VAR TIME/DIV to its calibrated detent.	

Table 5-1. Operational Checkout Procedures (Performance Check)—Continued

Step	Procedure	Performance Requirement
24. (continued)		
i.	Set controls as follows: HORIZ DISPLAY — B DLY'D B SOURCE — STARTS AFTER DELAY A AND B TIME/DIV — 2 μs	
j.	Change monitor oscilloscope input from +A GATE to +B GATE on oscilloscope under test.	5 volt positive pulse within 0.5 volt.
25.	**Chopped Mode Repetition Rate.**	
a.	Preset controls as listed in step 1; then reset as follows: A AND B TIME/DIV — 1 μs VERT MODE — CHOP A LEVEL — Stable display	33.3 to 5 divisions between the start of each complete wave cycle of the display.

5-2. PREVENTIVE MAINTENANCE. Operator preventive maintenance consists of external inspection and cleaning. Instrument repair agency preventive maintenance consists of external and internal inspection, cleaning, and lubrication. When performed regularly, preventive maintenance can prevent instrument breakdown and improve reliability.

a. Preventive Maintenance Schedule. Preventive maintenance schedules are usually established by a combination of user policies, equipment uses, and equipment environmental conditions. Lacking this guidance, Table 5-2 is a recommended preventive maintenance schedule for instruments in continuous use.

Table 5-2. Preventive Maintenance Schedule

	As required	Monthly	Semiannual or 1000 instrument hours
External cleaning	X		
External inspection		X	
Internal cleaning			X
Internal inspection			X
Calibration			X

b. External Preventive Maintenance. The following instructions are intended for use by either operators or the instrument repair agency.

(1) External Inspection. Table 5-3 is a list of external items to be inspected for damage or wear. Coordinate with the repair agency for repair of items that would cause serious or further damage to the instrument if not repaired immediately.

CAUTION

Instruments that appear to have been dropped, or otherwise abused, should be checked by qualified instrument repair technicians to verify correct operation and calibration.

(2) External Cleaning, Except Crt Faceplate and Filter. Dust the exterior surfaces with a dry, lint-free cloth or a soft bristle brush. If hard dirt remains, use a cloth or swab dampened with warm water and a mild detergent. A small swab is useful for cleaning in narrow spaces and around controls.

CAUTION

To prevent getting water inside the instrument during external cleaning use only enough water to dampen the cloth or swab.

Do not use chemical cleaning agents as they may damage the plastics used in the instrument. Use only approved cleaning agents.

(3) Cleaning the Crt Faceplate and Filter. To clean the crt faceplate and light filter, remove the filter as shown in Figure 3-1. Clean the faceplate and filter with a soft, lint-free cloth dampened with isopropyl alcohol.

Table 5-3. External Inspection Checklist

Item	Inspect for	Repair action (by repair agency unless otherwise noted)
Cabinet, front panel cover, front panel, and rear panel	Cracks, scratches deformations, and damaged hardware or gaskets.	Touch-up paint scratches (user), Replace cracked, deformed, or damaged parts.
Carrying handle	Correct operation.	Replace damaged parts.
Accessories	Missing items or parts of items, bent pins, broken or frayed cables, damaged connectors.	Repair frayed cables (user). Replace damaged or missing items (user). Repair damaged parts.
Front panel controls	Missing, damaged, or loose knobs or push buttons, Binding controls.	Tighten loose knobs (user). Repair or replace missing or damaged controls. Determine cause of binding controls, and repair.
Connectors	Broken shells, cracked insulation, and deformed contacts. Dirt in connector.	Replace damaged parts. Clean or wash out dirt (user).

c. Internal Preventive Maintenance. The following instructions are intended for use by instrument repair agencies only. When this maintenance is performed, the maintenance under External Preventive Maintenance above should also be performed.

WARNING

Electric shock hazards inside the instrument are exposed when the cabinet is removed. Disconnect the instrument from any power source before removing the covers.

(1) Cabinet Removal. Refer to Component Removal and Replacement for instructions on cabinet removal.

(2) Internal Cleaning. Internal cleaning should be done with a dry, low velocity stream of air. A soft bristle brush or swab is useful for cleaning in narrow spaces or around components. If these methods do not remove all the dust or dirt, the instrument may need to be disassembled and washed. Components may be spray washed using a 5% solution of water and mild detergent as follows:

CAUTION

Do not disassemble or wash the TIME/DIV switch and its associated circuit boards. Also, do not wash the vertical attenuators and their circuit boards. Washing may leave a residue on the switch contacts causing intermittent electrical problems.

When washing near unsealed electromechanical components, such as push-button switches use as little washing action as possible. This is to prevent washing all of the lubricant out of the part.

Do not use fluorocarbon base spray cleaners or silicone spray lubricants on cam switches or push-button switches. These sprays may damage the circuit board material or plastic parts and leave a dust collecting residue.

(a) Remove easily accessible shields and covers.

(b) Spray wash and thoroughly rinse the component.

(c) Blow-dry the component with low velocity air.

(d) Spray all switch contacts with isopropyl alcohol, wait for 60 seconds, and blow dry with low velocity air.

(e) Heat dry all components in an oven or compartment using low temperature (125° to 150°F) circulating air.

(3) TIME/DIV Switch Cleaning. This switch should not need cleaning unless it is intermittent. If so, rotate the switch between its limits a few times to see if it will self-clean. If this doesn't work, spray the contact area with

isopropyl alcohol, wait for 60 seconds, and blow dry with low velocity air. If these two methods do not solve the problem, remove the A AND B Timing Switch Board Assembly and disassemble it. Cleaning instructions are contained in the disassembly instructions.

(4) Attenuator Cleaning. The attenuator cam switches should be cleaned like the TIME/DIV switch above. If this doesn't work, disassemble the attenuator and clean the switch pads with an eraser (soft type on a pencil). See Component Removal, Replacement, and Disassembly instructions.

(5) Internal Inspection. Inspect the instrument for internal damage or wear using Table 5-4. Also, inspect externally using Table 5-3.

(6) Lubrication. Components are factory lubricated, which should be adequate for the life of the instrument. Occassionally, a replacement part in an assembly, such as a cam switch, may need lubricating. Where necessary, lubrication instructions are included in the Component Removal and Replacement instructions.

5-3. TROUBLESHOOTING. The following information is provided for troubleshooting the instrument. An understanding of the Theory of Operation in Section IV may be helpful in location of troubles.

Table 5-4. Internal Inspection Checklist

Item	Inspect for	Repair action
Circuit boards	Loose, broken, or corroded solder connections. Burned circuit boards. Burned, broken, or cracked circuit run plating.	Clean solder corrosion with an eraser and flush with isopropyl alcohol. Resolder connections. Determine cause of burned items, and repair. Repair damaged circuit runs.
Chassis	Detents, deformation, and damaged hardware.	Straighten, repair, or replace damaged hardware.
Resistors	Burned, cracked, broken, or blistered.	Replace damaged resistors.
Solder Connections	Cold solder or rosin joints.	Resolder and clean joint with isopropyl alcohol.
Wiring and Cables	Loose plugs or connectors. Burned, broken, or frayed.	Firmly seat connectors. Repair or replace damaged wire or cables.
Capacitors	Damaged or leaking cases. Corroded solder on terminals or leads.	Replace capacitors with damaged or leaking cases. Clean solder connections and flush with isopropyl alcohol.
Semiconductors	Loosely inserted in sockets. Bent pins.	Remove items with bent pins, carefully straighten the pins with long-nose pliers, and reinsert firmly (be sure that the straightening action hasn't cracked the pin such that it will break easily). Firmly seat all loose semiconductors.
Push-button controls	Binding controls. Missing push buttons.	Determine cause of binding control, and repair. Replace push buttons.

a. Troubleshooting Aids.

(1) Diagrams. Complete circuit diagrams are contained on foldout pages in Section VI, Diagrams. The portions of the circuit mounted on circuit boards are enclosed with heavy lines. The component number and electrical value of each component in this instrument are shown on the diagrams (see the Diagrams section for symbols used on diagrams). Each main circuit is assigned a series of component numbers to assist in identifying their circuit location. Important voltages and waveforms are also shown on the diagrams. The physical locations of the waveform test points are shown on the circuit board illustrations.

(2) Circuit Board Illustrations. An illustration showing the location of each circuit board precedes each applicable schematic diagram. Portions of a circuit board may apply to more than one schematic diagram. A circuit board illustration showing all of the components on a board is located on the back of a foldout page preceding the first schematic diagram the board components apply to. Each circuit board illustration is provided with a grid and a grid index to facilitate rapid location of components contained on the circuit board.

(3) Component Value Identification. Values of capacitors, diodes and resistors used in this instrument are identified by direct numerical values or by a color code scheme. Figure 5-1 shows the color code and numerical value schemes used.

(4) Troubleshooting Chart. A troubleshooting chart Figure 5-2, is provided to aid in locating problem areas.

(5) Semiconductor Lead Configurations. Typical semiconductor lead configurations are shown in Figure 5-3.

For Service Manuals Contact
MAURITRON TECHNICAL SERVICES
8 Cherry Tree Rd, Chinnor
Oxon OX9 4QY
Tel:- 01844-351694 Fax:- 01844-352554
Email:- enquiries@mauritron.co.uk

1907-16A

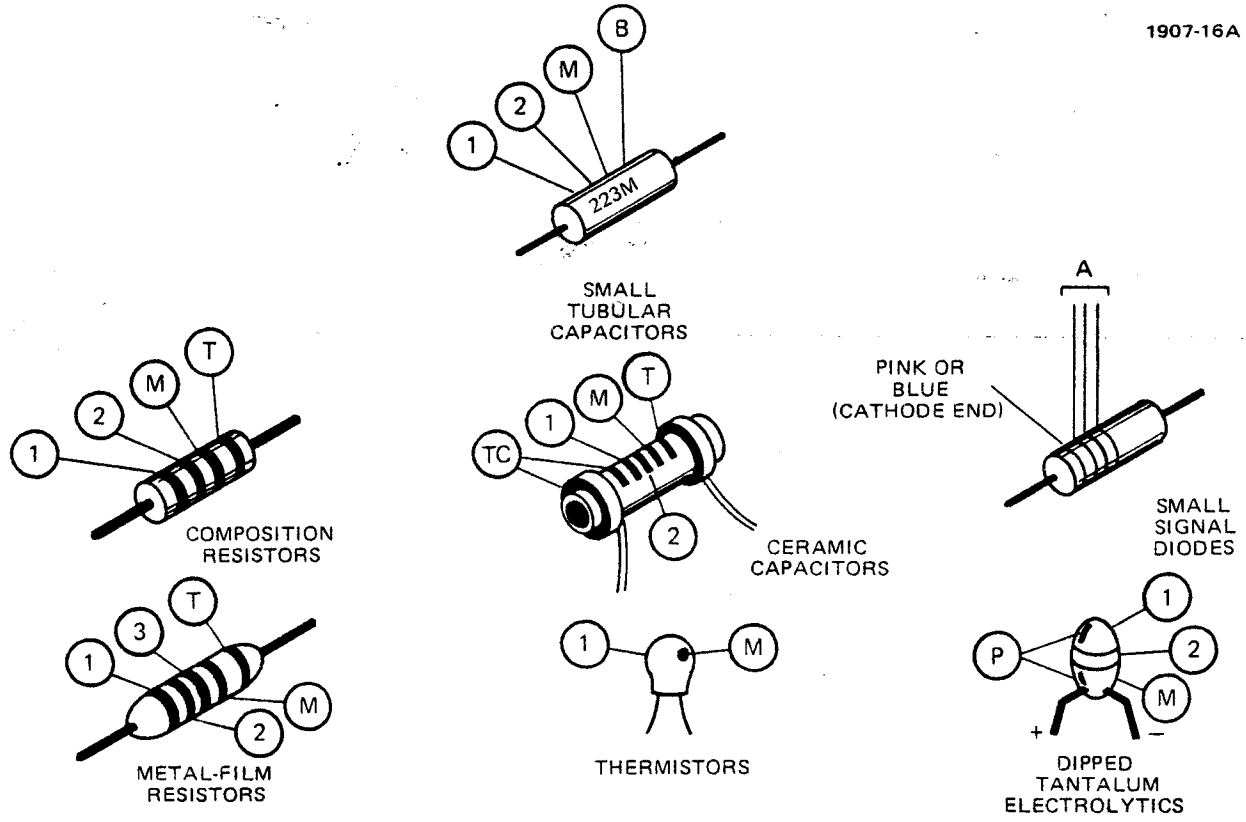

(A) COLORS IDENTIFY SIGNIFICANT DIGITS IN TEKTRONIX PART NUMBER (E.G. BROWN, GRAY, GREEN STRIPES INDICATE PART NUMBER 152-0185-00)

(1) (2) and (3) 1ST, 2ND, AND 3RD SIGNIFICANT FIGS.

(M) MULTIPLIER (T) TOLERANCE;

(TC) TEMPERATURE COEFFICIENT.

(B) TOLERANCE; F=±1%, J=5%, K=10%, M=20%

(T) AND/OR (TC) COLOR CODE MAY NOT BE PRESENT ON SOME CAPACITORS;

(P) POLARITY AND VOLTAGE RATING

COLOR	SIGNIFICANT FIGURES	RESISTORS (Ω)		CAPACITORS (pF)			DIPPED TANTALUM VOLTAGE RATING
		MULTIPLIER	TOLERANCE	MULTIPLIER	TOLERANCE		
					over 10 pF	under 10 pF	
BLACK	0	1	---	1	±20%	±2 pF	4 VDC
BROWN	1	10	±1%	10	±1%	±0.1 pF	6 VDC
RED	2	10^2 or 100	±2%	10^2 or 100	±2%	---	10 VDC
ORANGE	3	10^3 or 1 K	±3%	10^3 or 1000	±3%	---	15 VDC
YELLOW	4	10^4 or 10 K	±4%	10^4 or 10,000	+100% –9%	---	20 VDC
GREEN	5	10^5 or 100 K	±½%	10^5 or 100,000	±5%	±0.5 pF	25 VDC
BLUE	6	10^6 or 1 M	±¼%	10^6 or 1,000,000	---	---	35 VDC
VIOLET	7	---	±1/10%	---	---	---	50 VDC
GRAY	8	---	---	10^{-2} or 0.01	+80% –20%	±0.25 pF	---
WHITE	9	---	---	10^{-1} or 0.1	±10%	±1 pF	3 VDC
GOLD	–	10^{-1} or 0.1	±5%	---	---	---	---
SILVER	–	10^{-2} or 0.01	±10%	---	---	---	---
NONE	–	---	±20%	---	±10%	±1 pF	---

Figure 5-1. Component value identification.

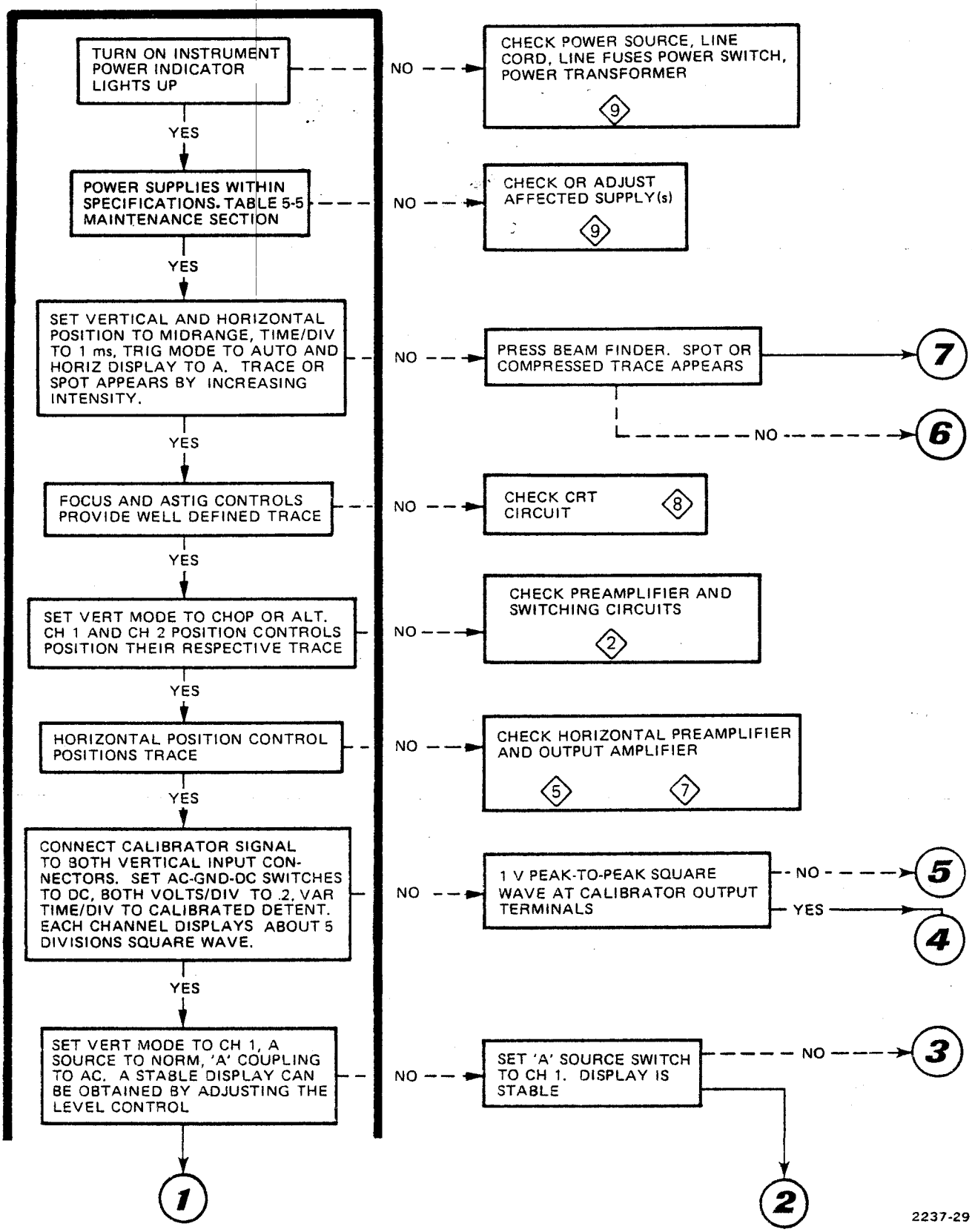

Figure 5-2. Troubleshooting chart (sheet 1 of 5).

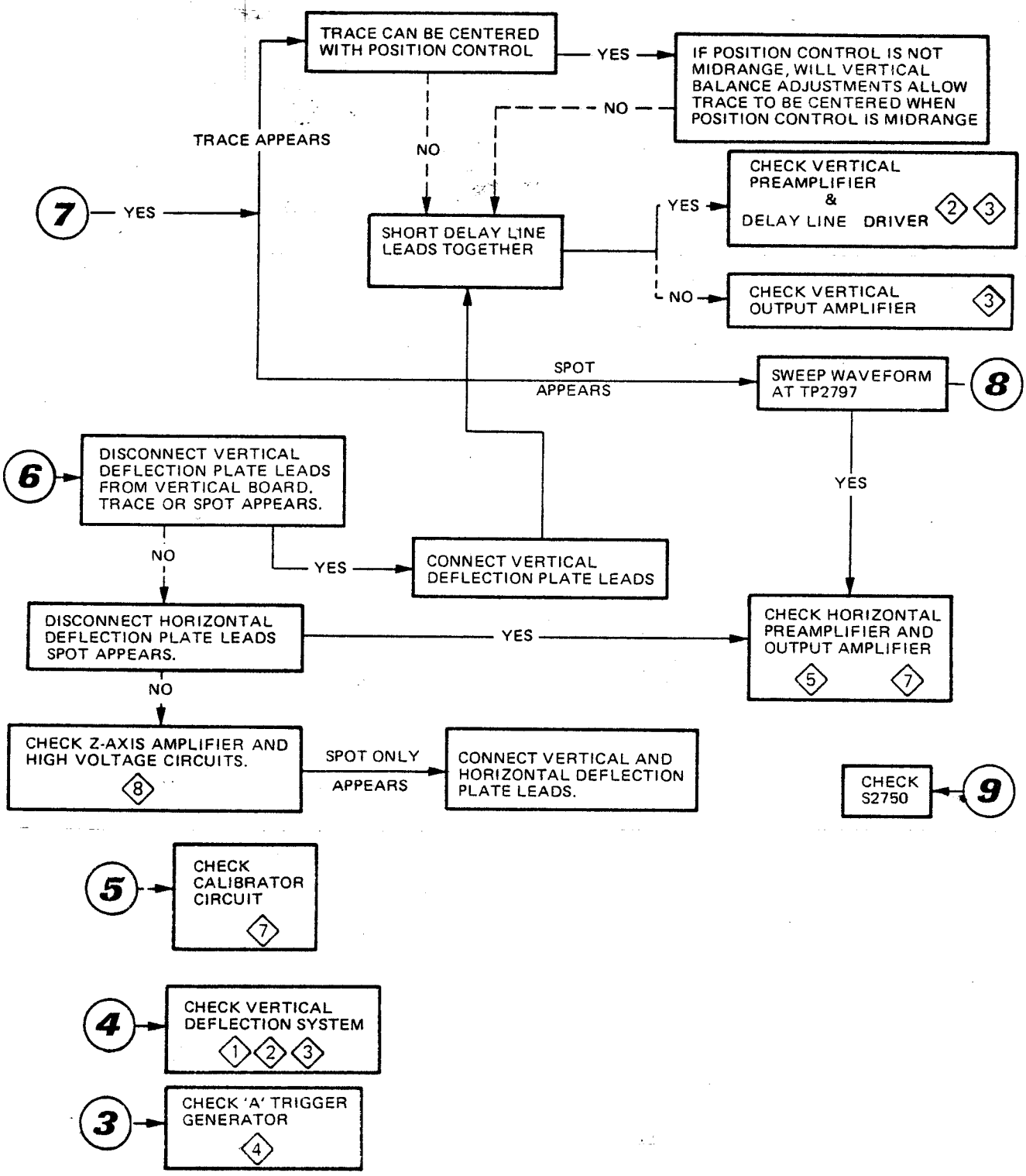

2237-109

Figure 5-2. Troubleshooting chart (sheet 2 of 5).

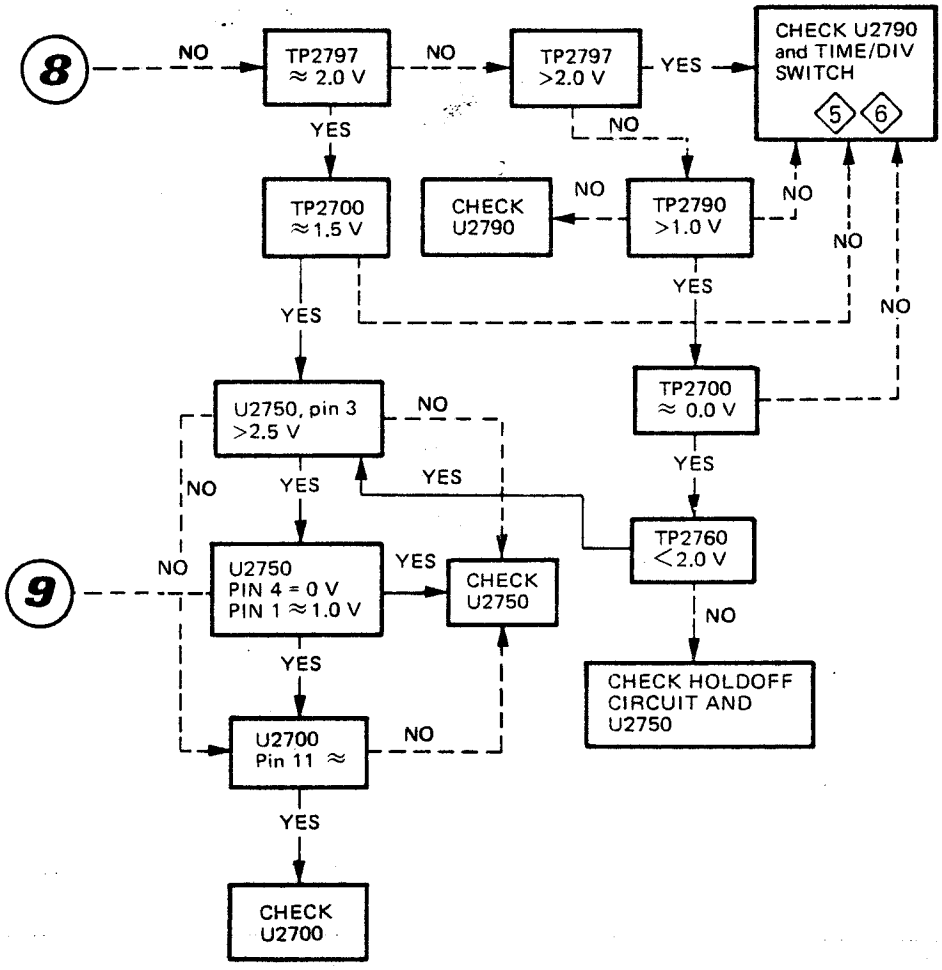

2237-110

Figure 5-2. Troubleshooting chart (sheet 3 of 5).

For Service Manuals Contact
MAURITRON TECHNICAL SERVICES
8 Cherry Tree Rd, Chinnor
Oxon OX9 4QY
Tel:- 01844-351694 Fax:- 01844-352554
Email:- enquiries@mauritron.co.uk

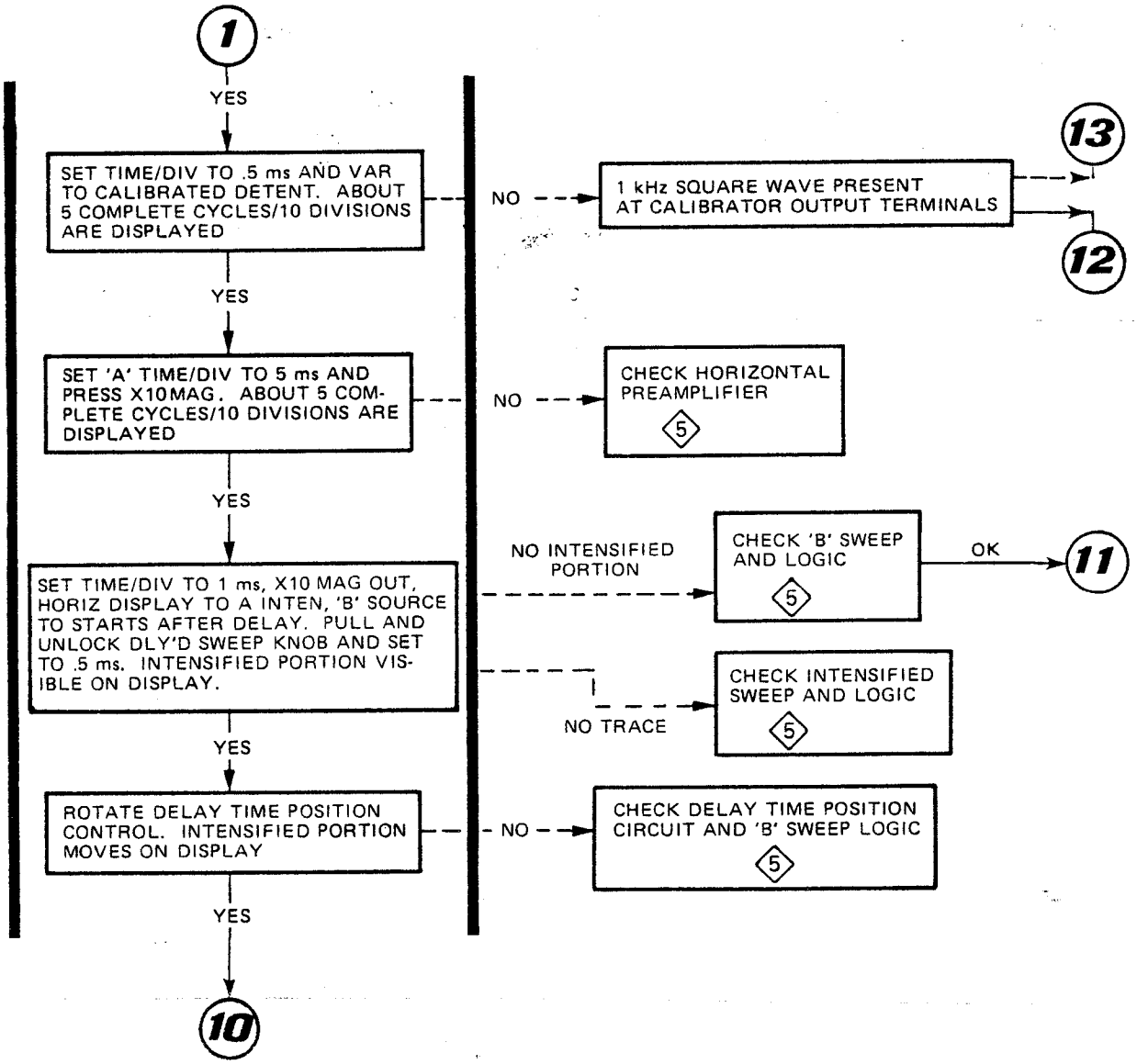

Figure 5-2. Troubleshooting chart (sheet 4 of 5).

2237-30

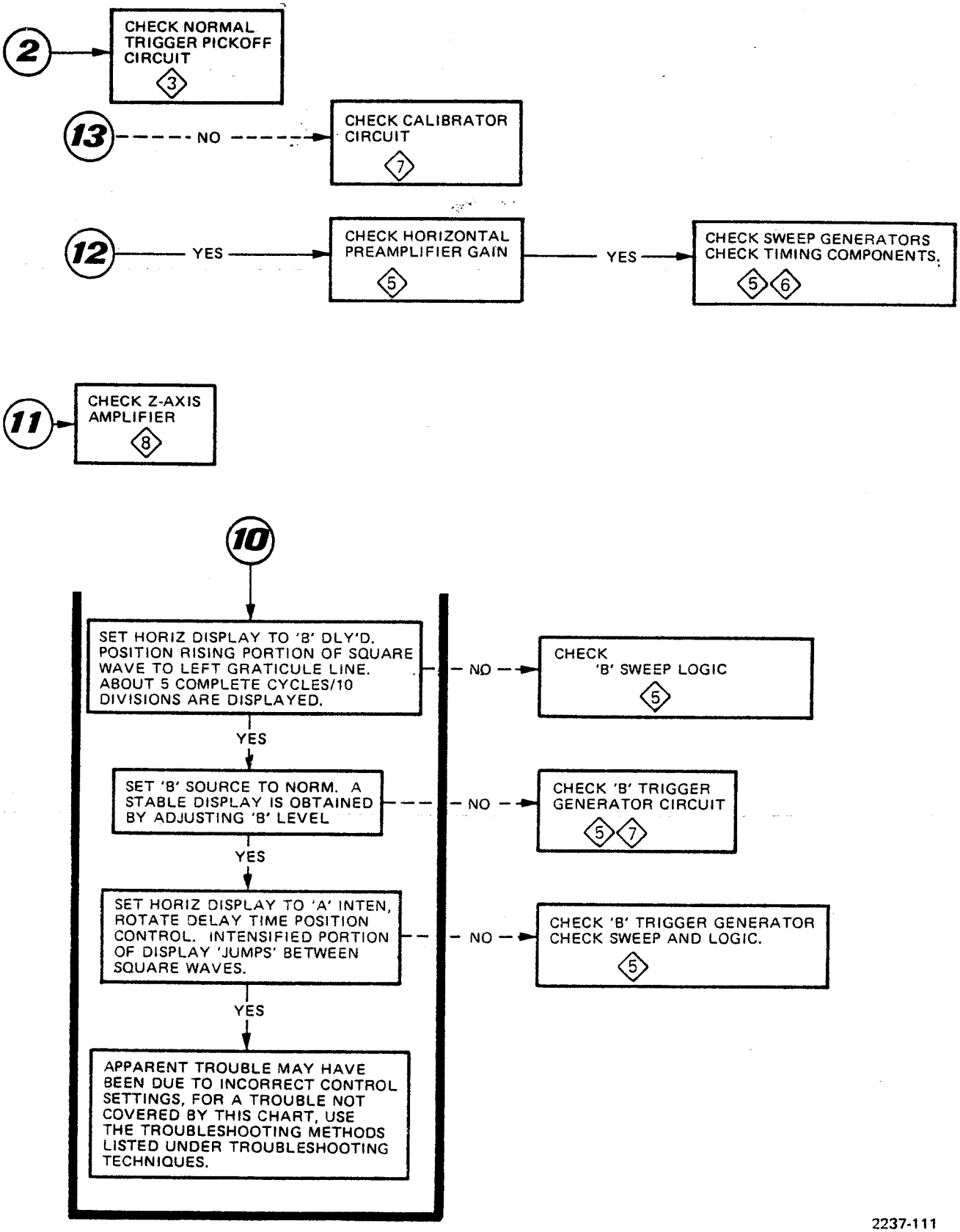

Figure 5-2. Troubleshooting chart (sheet 5 of 5).

NOTE
LEAD CONFIGURATIONS AND CASE STYLES ARE TYPICAL, BUT MAY VARY DUE TO VENDOR CHANGES OR INSTRUMENT MODIFICATIONS.

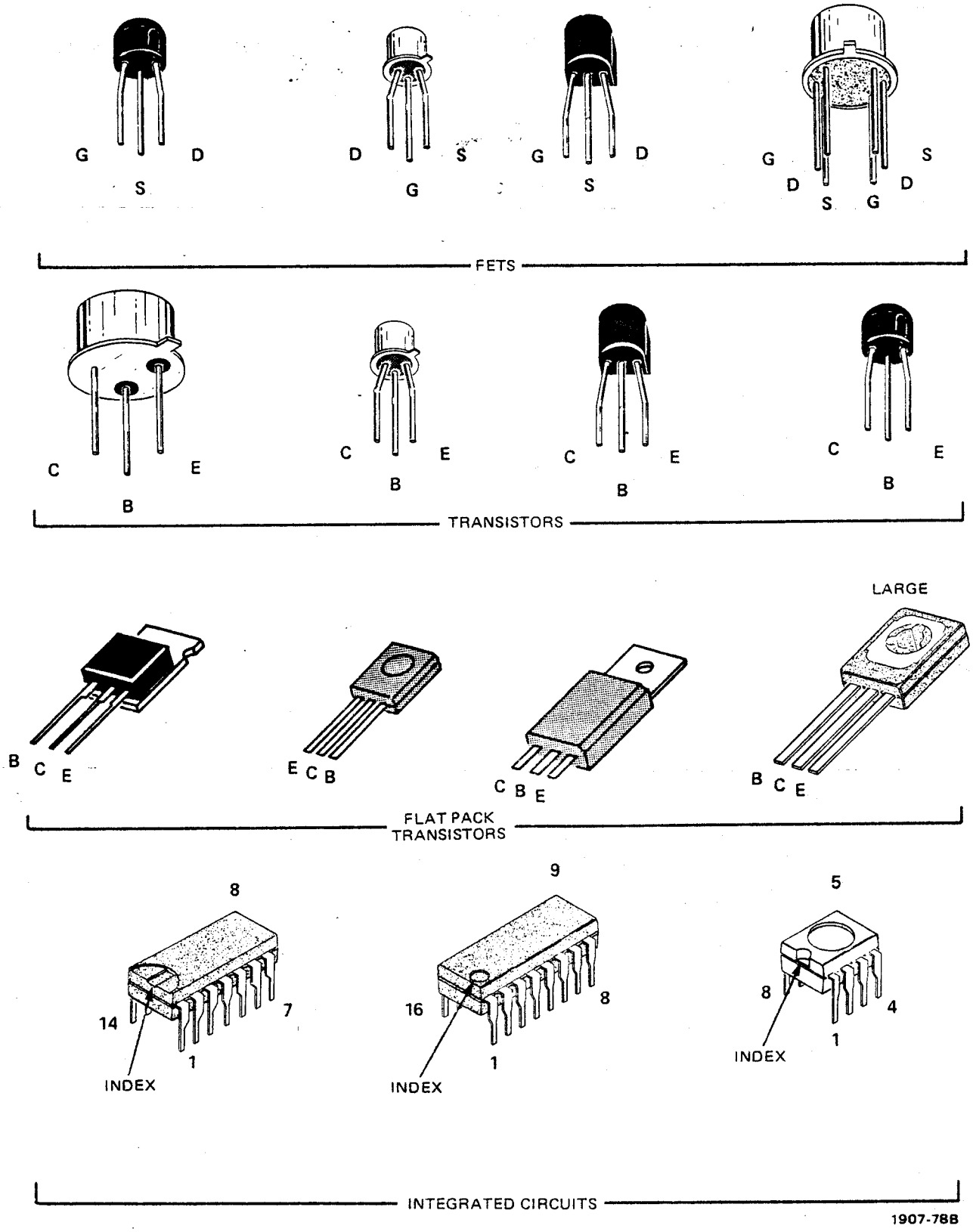

1907-78B

Figure 5-3. Semiconductor lead configurations.

b. Troubleshooting Techniques. The following procedures are arranged in an order that checks the simple trouble possibilities before proceeding with extensive troubleshooting. The first few checks ensure proper connection, operation, and calibration. If the trouble is not located by these checks, the remaining checks should aid in locating the defective component.

(1) Check Control Settings. Incorrect control settings can give a false indication of an instrument malfunction. If there is any question about the correct function or operation of any control, see the Operation Instructions section.

(2) Check Associated Equipment. Before proceeding with troubleshooting, check that the quipment used with this instrument is operating correctly. Check that the signal is properly connected and that the interconnecting cables are not defective. Also, check the power source.

(3) Check Instrument Calibration. Check the calibration of this instrument, or the affected circuit if the trouble exists in one circuit. The apparent trouble may only be misadjustment that can be corrected by calibration.

(4) Visual Check. Visually check the portion of the instrument in which the trouble is located. Many troubles can be located by visible indications such as unsoldered connections, broken wires, damaged circuit boards, and damaged components.

(5) Isolate Trouble to a Circuit. Using the troubleshooting chart Figure 5-2, isolate trouble to a particular circuit. The symptom often identifies the defective circuit. Trouble appearing in more than one circuit can indicate possible power supply problems. Power supply tolerance and ripple limits can be checked using Table 5-5. Power supply disconnect jumpers are provided for each of the supplies. Refer to the schematics and circuit board illustrations for their location. These jumpers can be unsoldered to disconnect the circuit load from most of the supplies. Each unregulated supply contains a fuse for circuit protection.

(6) Check Circuit Board Interconnections. After the trouble has been isolated to a particular circuit, check for loose or broken connections, improperly seated transistors and heat damaged components.

(7) Check Voltages and Waveforms. Often the defective component can be located by checking for the correct voltage or waveform in the circuit. Typical voltages are given on the diagrams. Waveforms are shown on the circuit diagram apron.

NOTE

Voltages and waveforms given on the diagrams are not absolute and therefore may vary slightly between instruments. To obtain operating conditions similar to those used to take these readings, see the voltage and waveform set up procedures in the Diagrams section. Individual deviations should be noted on the schematics for future reference.

Table 5-5. Power Supply Tolerance and Ripple.

Supply	Tolerance	Maximum Ripple (peak-to-peak)
−5 V	±1.1% (5.5 mV)	1 mV
+5 V	±1.1% (5.5 mV)	1 mV
+32 V	±0.6% (192 mV)	1 mV
+95 V	±2.0 V	1 V
−2 kV	±1.25% (25 V)	200 mV

(8) Check Individual Components. The following procedures described methods of checking individual components. Components which are soldered in place are best checked by disconnecting one end. This isolates the measurement from the effects of surrounding circuitry.

WARNING

The Power switch must be turned off before removing or replacing components to prevent electrical shock or circuit damage.

(a) Semiconductors. A good check of transistor operation is actual performance under operating conditions. A transistor can be most effectively checked by substituting a new component for it (or one which has been checked previously). However, be sure that circuit conditions are not such that a replacement transistor might also be damaged. If substitute transistors are not available, use a dynamic tester. Static type testers are not reommended, since they do not check operation under simulated operating conditions.

1 When troubleshooting transistors in the circuit with a voltmeter, measure the emitter to base and emitter to collector voltages to determine if the voltages are consistent with normal circuit voltages. Voltages across a transistor vary with the type of device and its circuit function. Some of these voltages are predictable. The emitter to base voltage of a conducting silicon transistor will normally be 0.6 to 0.8 volts. The emitter to collector voltages of a saturated transistor is about 0.2 volts. Because these values are small, the best way to check them is by

connecting the voltmeter across the junction and using a sensitive voltmeter setting, rather than by comparing 2 voltages taken with respect to ground (both leads of the voltmeter must be isolated from ground if this method is used). If values less than these are obtained, either the device is short-circuited or no current is flowing in the circuit. If values are in excess of the base emitter values given, the junction is back biased or the device is defective. Values in excess of those given for emitter collector could indicate either a nonsatured device operating normally, or a defective (open-circuited) transistor. If the device is conducting, voltage will be developed across resistances in series with it; if it is open, no voltage will be developed across resistances in series with it unless current is being supplies by a parallel path.

2 When troubleshooting a field effect transistor, the voltages across its elements can be checked in the same manner as for transistors. However, it should be remembered that normal depletion mode operation has the gate to source junction reverse biased, while the enhanced mode has the junction forward biased.

3 Integrated circuits (IC's) can be checked with a voltmeter, test oscilloscope, or by direct substitution. A good understanding of circuit operation is essential to troubleshooting circuits using IC's. Use care when checking voltages and waveforms around the IC's so that adjacent leads are not shorted together. A convenient means of clipping a test probe to the 14- and 16-pin IC's is with an IC test clip. This device also doubles as an extraction tool.

(b) Diodes. A diode can be checked for an open or for a short circuit by measuring the resistance between terminals with an ohmmeter set to the R X 1 kilohm scale. The diode resistance should be very high in one direction and very low when the meter leads are reversed.

CAUTION

Do not use an ohmmeter scale that has a high internal current. High currents can damage diodes. Check diodes in the same manner as transistor emitter to base junctions. Silicon diodes should have 0.6 to 0.8 volts across the junction when conducting. Higher readings indicate that they are either back biased or defective, depending on polarity.

(c) Resistors. Check the resistors with an ohmmeter. Check the parts list for tolerance of the resistors used in this instrument. Resistors normally do not need to be replaced unless the measured value varies considerably from the specified value.

(d) Inductors. Check for open inductors by checking continuity with an ohmmeter. Shorted or partially shorted inductors can usually be found by checking the waveform response when high-frequency signals are passed through the circuit.

(e) Capacitors. A leaky or shorted capacitor can best be detected by checking resistance with an ohmmeter on the highest scale. Do not exceed the voltage rating of the capacitor. The resistance reading should be high after initial charge of the capacitor. An open capacitor can be detected with a capacitance meter or by checking whether the capacitor passes ac signals.

(f) Attenuators. The thick film attenuators are best checked by substitution. If only one channel is not operating properly, and there is reason to believe an attenuator is defective, replace the suspected attenuator with the same attenuator from the other channel and check instrument operation. If proper operation results, replace or repair the defective attenuator.

5-4. CALIBRATION AND CHECKOUT AFTER REPAIR.

Whenever repairs involve the power supplies or instrument disassembly, Calibration and an Operational Checkout should be performed.

5-5. COMPONENT REMOVAL, REPLACEMENT, AND DISASSEMBLY.

WARNING

To prevent electrical shock or damage to the instrument, always disconnect the instrument from the power source before removing or replacing components. Also, review the Safety Summary page in the front of this manual.

a. Cabinet Top and EMI Shield Removal and Replacement.

(1) Using a coin or large bladed screwdriver, rotate the three circular locks on each side of the cabinet (see Figure 5-5) counterclockwise until the slots are vertical.

(2) Lift the cabinet top straight up.

(3) Remove the nine screws holding the EMI Shield (6 on left side near the front, 2 on the top at the rear, and 1 on the top right at the front).

(4) Lift the EMI Shield straight up.

(5) Replace the EMI Shield and cabinet top in reverse order.

b. Interconnecting Cables and Connectors (Figure 5-4). The interconnecting cable assemblies are factory assembled. They consist of machine installed pin connectors mounted in plastic holders. The plastic holders are easily replaced as individual items, but if the connectors are faulty, the entire cable should be replaced. It is possible for the pin connectors to become dislodged from the plastic holders. If this happens, the connector can be reinstalled as follows:

(1) Bend grooved portion of holder away from cable as shown.

(2) Reinsert connector into its hole in the plug-in portion of holder. Wires are positioned in holder according to color code system (see note below).

NOTE

Holder positions are numbered (number one is identified with a triangle).

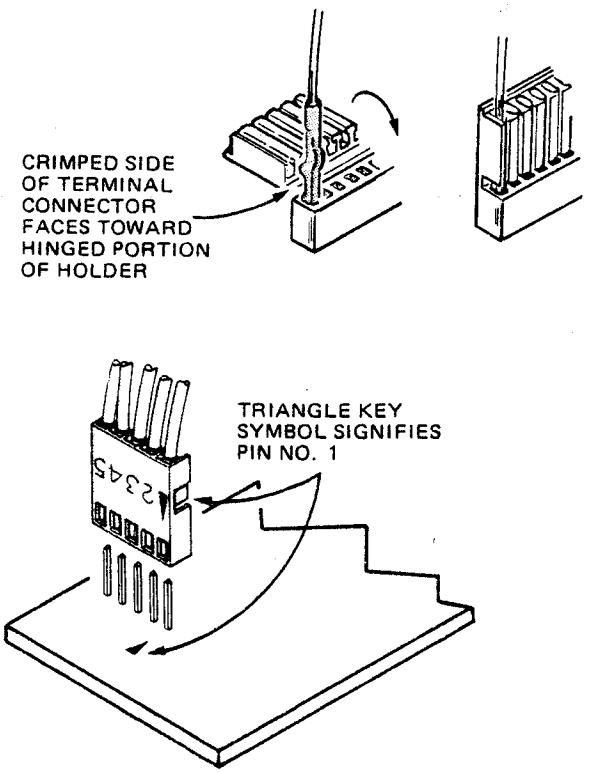

Figure 5-4. Multiconductor connector identification.

(3) Bend grooved part of holder so that connector is inserted into groove.

(4) When plugging connector holders on to board pins, be sure to match triangle mark on holder with triangle mark on circuit board.

c. Rear Panel Assembly Removal and Replacement (Figure 5-5).

(1) Remove the cabinet top.

(2) Unplug the power cord.

(3) Unplug the coaxial connector end at the +A GATE OUT (white wire with yellow trace) and CH 2 OUT (white wire with brown trace) connectors located on the A8 Sweep and A5 Vertical boards, respectively.

(4) Remove the four screws on the inside corners of the rear subpanel.

CAUTION

When removing the rear panel in the next step, be careful not to break or damage the attached wiring or cables.

(5) While carefully pulling the top of the rear panel away from the mounting brackets lift the bottom up and out of the groove in the cabinet bottom. Then lay the rear panel on its back and disconnect the attached wires and cables.

(6) Replace the rear panel in the reverse order. Reconnect the wires and cables. Then hold the panel vertical and set it into the groove in the cabinet bottom. Align the screw holes and install the four corner screws. If the rear panel wires and cables were not tagged when removed, the following may be useful.

(a) The input power wires and power transformer leads are color coded as shown on the schematic diagrams. Also, the circuit board lead mounting holes for the rectifiers are color code numbered for the transformer leads (e.g., 2 is red, 6 is blue, etc).

(b) The clear plastic connectors for the transistors on the rear panel can be installed only with the mounting holes closest to the panel. These transistors are numbered Q736, Q746, and Q768 starting at the power transformer and moving away from it. They connect to number matching

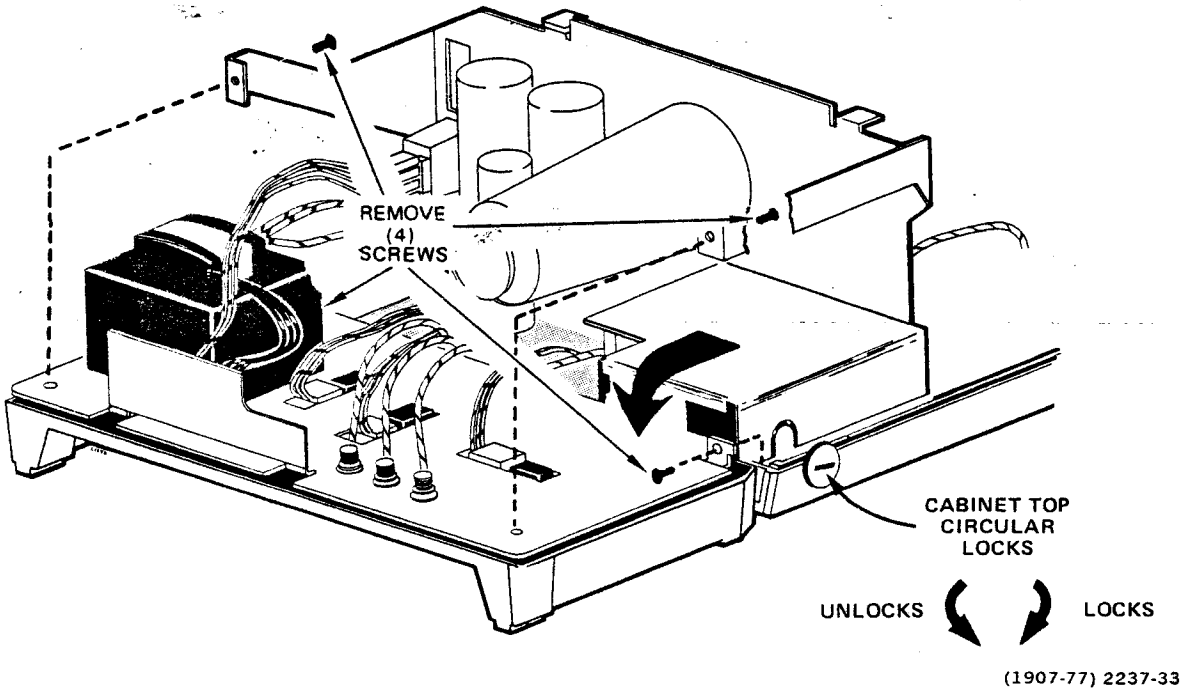

Figure 5-5. Rear panel removal.

plugs (e.g., Q736 to J736, etc.) on the A11 board. Be sure multiconductor holders are installed with proper triangle key orientation (see Figure 5-4).

d. Cabinet Bottom Removal and Replacement (Figure 5-6).

(1) Remove the cabinet top.

(2) Raise the front of the instrument and remove the four external screws from the cabinet bottom.

(3) Remove the rear panel assembly.

(4) Remove the remaining seven internal screws from the cabinet bottom.

(5) Lift the instrument off the cabinet bottom.

(6) Replace the bottom in the reverse order of removal. When installing the four external screws in the front part of the cabinet bottom, the floating nuts inside the instrument along side the front part of the crt, may need to be aligned.

e. Vertical Module Removal (Figure 5-7).

(1) Remove the remaining screw holding the module.

(2) Unplug CH 2 OUT cable, vertical deflection plate leads, and multiconductor connector to the horizontal module.

(3) Pull plug in module straight up and away from interface connector.

(4) Reinstall the module in reverse order. Be sure CH 2 OUT cable is routed through cutout at bottom of module.

f. Horizontal Module Removal (Figure 5-8).

(1) Remove the remaining screw holding the module.

(2) Unplug multiconductor connector to vertical module and +A GATE OUT cable.

(3) Unsnap the POWER switch extension rod from yokes on POWER switch shaft.

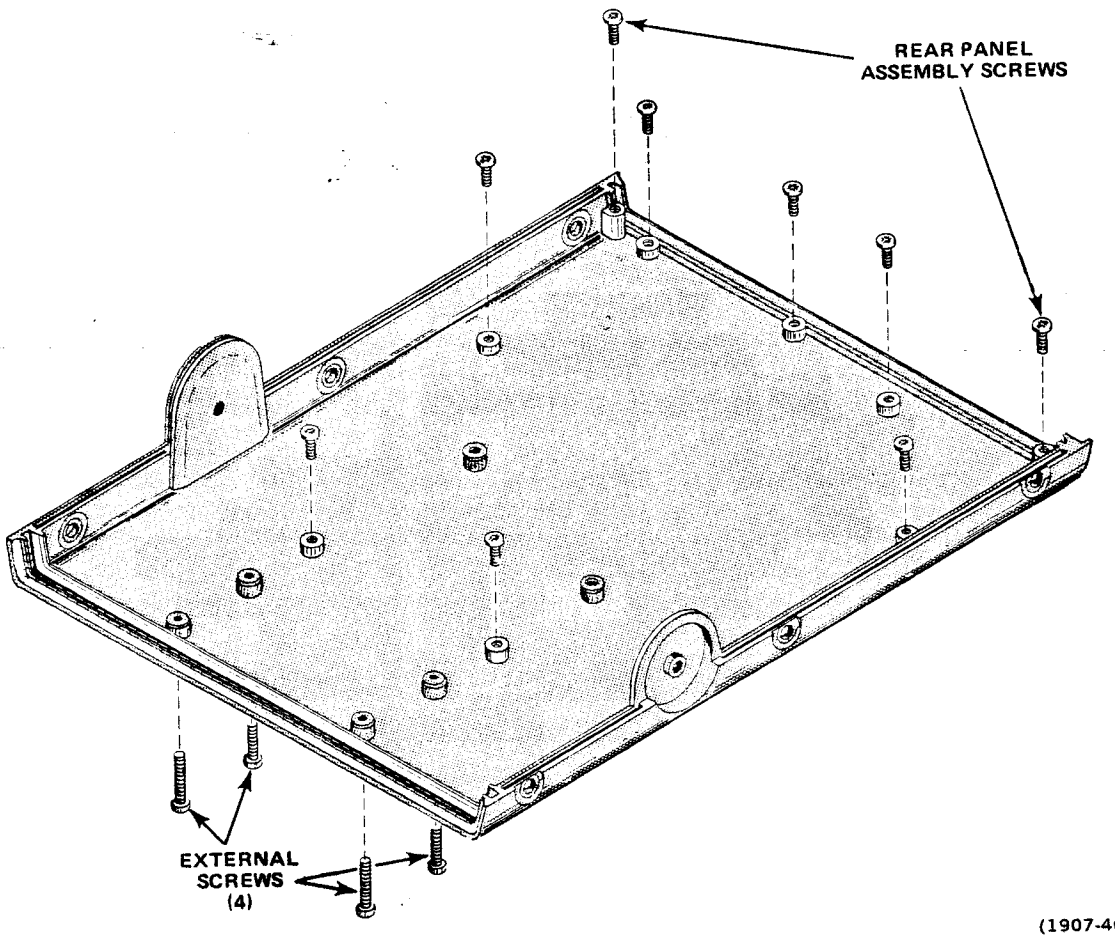

(1907-40) 2237-34

Figure 5-6. Cabinet bottom removal.

(4) Pull plug in module straight up and away from interface connector.

(5) Reinstall the module in reverse order. Be sure plastic yokes on POWER switch are aligned before reinstalling the extension rod.

g. Cathode Ray Tube (Crt) Removal.

WARNING

Handle crt carefully. Rought handling or scratching may cause crt to implode.

(1) Remove vertical module.

(2) Remove plastic bezel and filter on front of crt.

(3) Unplug crt anode lead and discharge to chassis.

(4) Unplug crt base socket.

NOTE

When removing leads in the next two steps make a note of the lead color, or tag the leads.

(5) Disconnect two vertical deflection plate leads from left side of crt neck.

(6) Disconnect two horizontal deflection plate leads from the circuit board.

(7) Hold crt face in one hand and slowly push crt base with other hand.

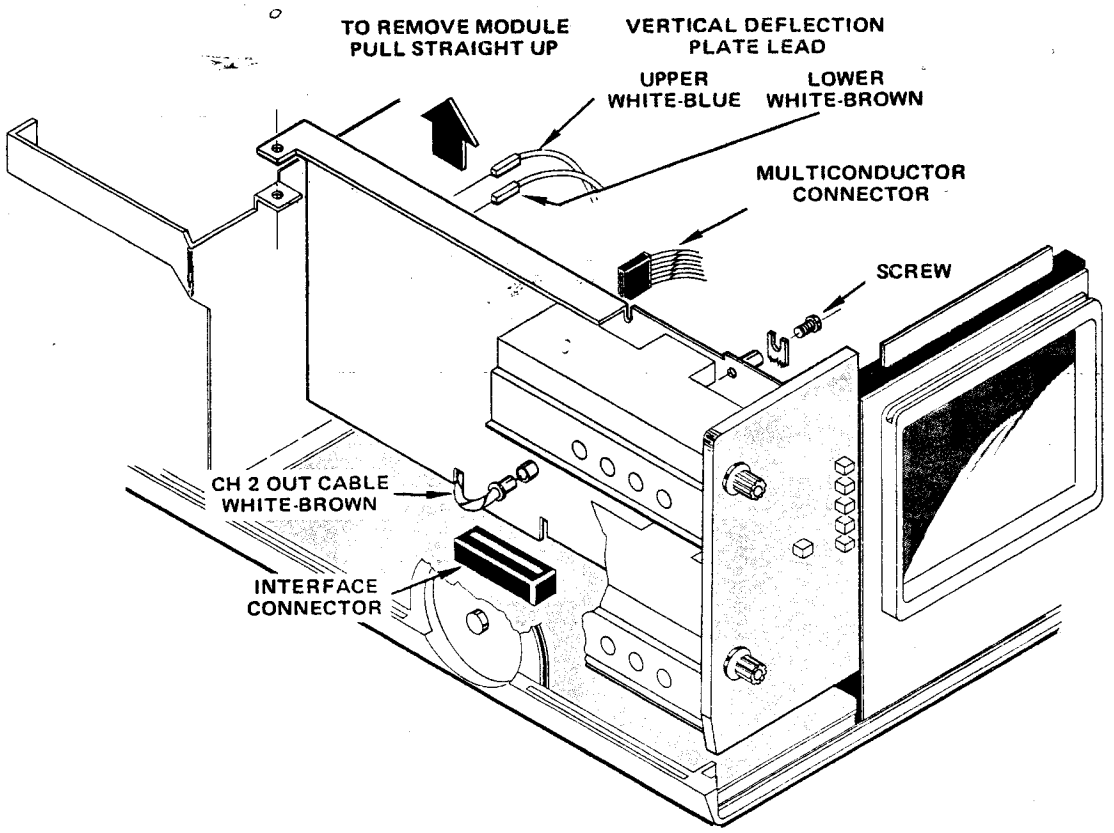

(1907-43) 2237-35

Figure 5-7. Vertical module removal.

(8) Carefully pull crt out of shield (watch horizontal deflection leads).

(9) Reinstall the crt in reverse order.

h. Shaft-Knob Removal (Figure 5-9).

(1) Grip knob end with one hand and shaft with other hand.

(2) Pull on knob, while pushing on shaft, to free recessed portion of shaft from retainer bushing. Some shaft-knobs may require considerable force to remove.

(3) Replace the shaft-knob in reverse order.

i. Interface Board Removal.

(1) Remove the vertical and horizontal modules.

(2) Lift up the front of the instrument and remove the four external cabinet bottom screws.

(3) Unplug the crt socket.

(4) Remove the high voltage shield.

(5) Remove the shaft-knob from INTEN, ASTIG, FOCUS, TRACE ROTATION, and SCALE ILLUM controls (see h. above).

(6) Unplug the crt anode lead and discharge it to the chassis.

(7) Unplug the crt vertical deflection plate leads from crt (left side) and horizontal deflection plate leads from the Interface circuit board.

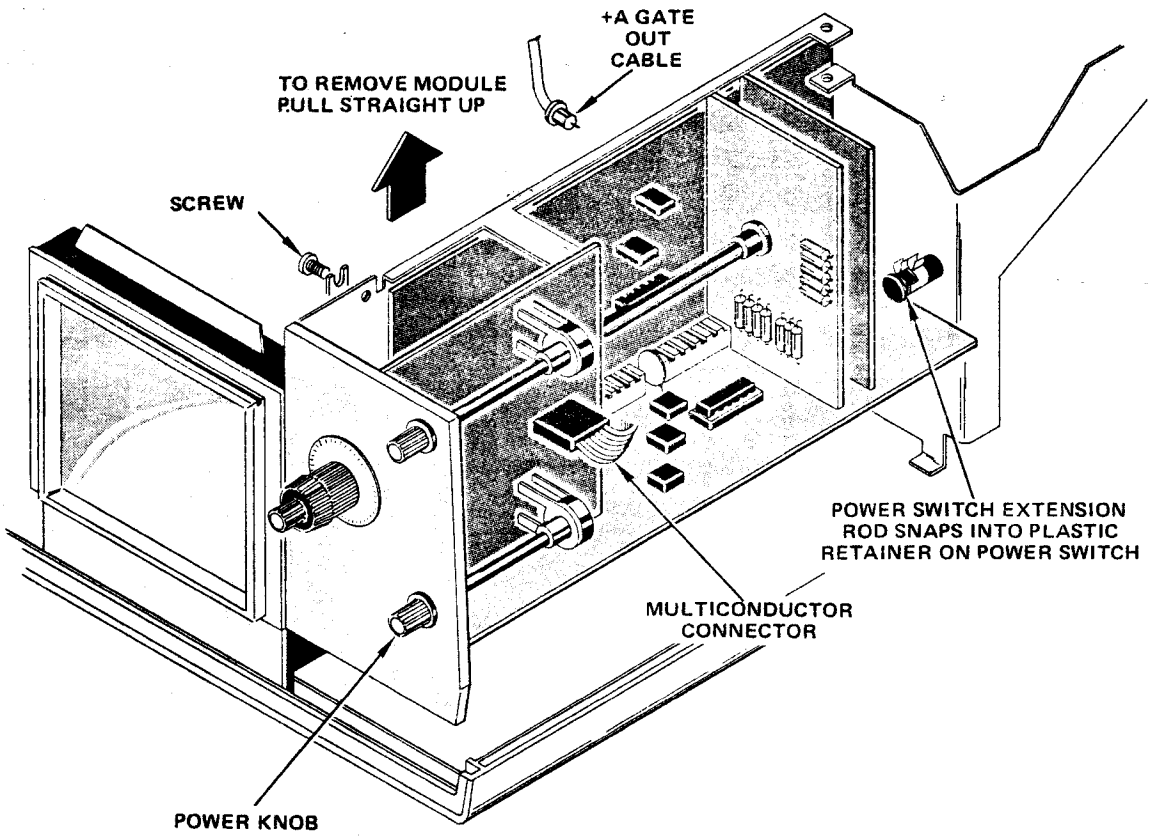

(1907-47) 2237-36

Figure 5-8. Horizontal module removal.

(8) Unplug the crt trace rotation and Y-Axis leads coming from the top of the crt.

(9) Remove the ground post and bracket at the top rear of the crt shield.

(10) Carefully lift the crt assembly (crt, shield, and center front section) forward and up away from the chassis.

The BEAM FINDER push button should slip out of the assembly.

(11) Remove the two screws and two nuts holding the power supply chassis divider. Loosen the small screw in the front lower right corner of this chassis (there is a heat sink on the other side). Carefully remove the chassis.

(12) Remove the rear panel and disconnect the wires and cables to the Interface Board.

(13) Remove the remaining screws holding the Interface Board to the cabinet bottom.

(14) Reinstall the board in reverse order. Be sure to properly install the heat sink when replacing the divider chassis in step (11).

j. A and B Timing Switch Board Assembly Removal and Replacement (Figure 5-10).

(1) Remove the horizontal module.

(2) Remove the VAR (1 hex screw) and the TIME/DIV knobs by loosening their set screws with a 1/16 inch hex wrench.

(3) Remove the two screws and hex nuts holding the switch board assembly.

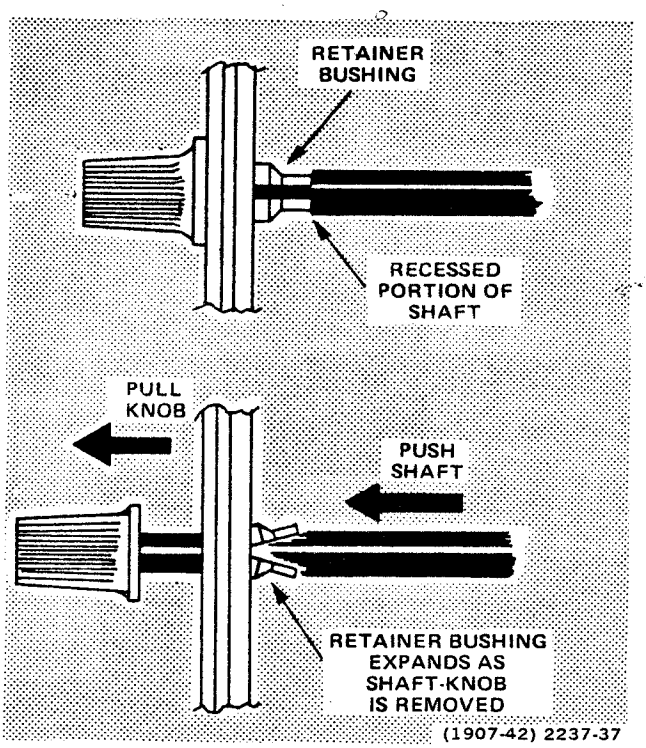

Figure 5-9. Shaft-knob removal.

(4) Remove the TIME/DIV knob skirt by loosening its set screw with a 5/64 inch hex wrench.

CAUTION

When removing the assembly in the next step, be careful not to bend the connector pins on the A8 Sweep Board.

(5) Carefully pull the board assembly away from the Sweep Board until it just unplugs. Then pull the board assembly toward the rear of the module until the switch shaft exits the front panel.

(6) Reinstall the assembly as follows:

(a) Guide the switch shaft through the front panel opening and carefully plug the board into the Sweep board.

(b) Grip the bushing at the switch end of the A TIME/DIV shaft and rotate the shaft fully counterclockwise, then two positions clockwise (.2 ms). Install the plastic knob skirt so the window in the skirt aligns with the .2 ms panel marking and tighten the knob skirt set screw.

(c) Grip the bushing at the switch and rotate the A TIME/DIV shaft fully counterclockwise. Temporarily install the B TIME/DIV knob, pull to unlock and rotate the B TIME/DIV shaft fully counterclockwise.

(d) Loosen set screw and install the B TIME/DIV knob so that the white line points to the same setting as the black bordered window on the knob skirt (pointing at X-Y). Tighten the set screws.

(e) Grip the VAR potentiometer shaft coupling and rotate the VAR shaft fully clockwise into the detent. Install the VAR knob with the word VAR horizontal and tighten the set screw.

(f) Set TIME/DIV to X-Y. Pull the B TIME/DIV knob to unlock and rotate fully clockwise. When properly installed, B TIME/DIV should set to 0.5 μs and cause A TIME/DIV to set to .2 s.

k. A and B Timing Switch Disassembly (Figures 5-10 and 5-11).

(1) Remove the VAR shaft by loosening its set screw at the VAR potentiometer coupling with a 0.05 inch hex wrench.

(2) Remove the four screws holding the switch and boards together. Separate the boards, being careful that the switch doesn't fall out. Also, do not lose the two plastic nut retainers.

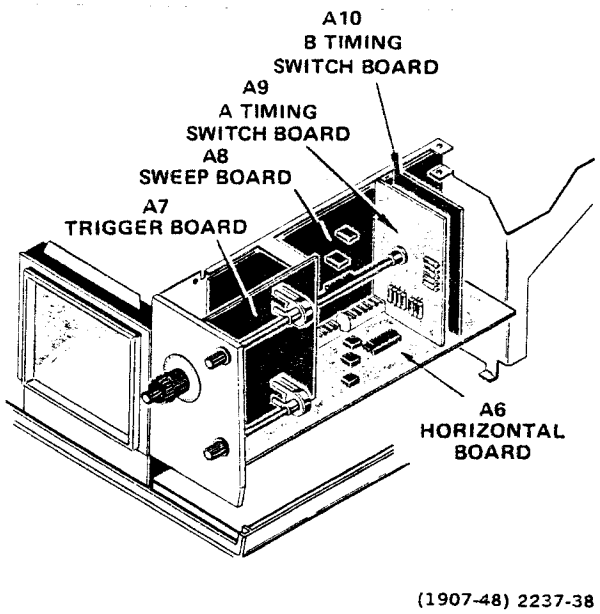

Figure 5-10. Horizontal module board locator.

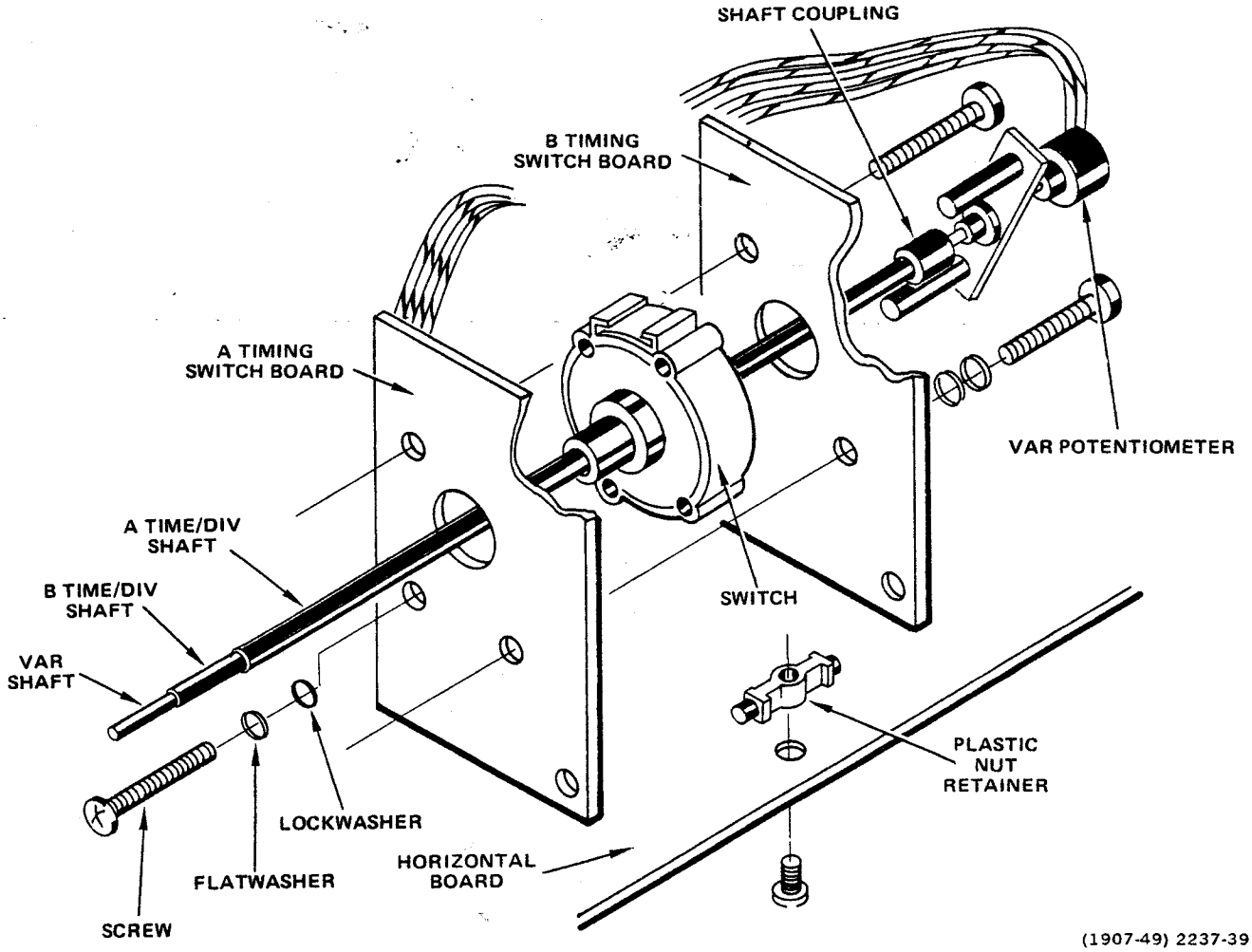

Figure 5-11. TIME/DIV switch disassembly.

CAUTION

Do not touch the switch contact wipers as they are easily damaged or contaminated. Do not use a brush or swab to clean the wipers. Whenever the switch is separated from the boards, it should be placed in some type of container for protection from damage or contamination.

(3) Clean the switch contact pads with a soft eraser (pencil type).

(4) Clean the boards with isopropyl alcohol.

(5) Reassemble the switch as follows:

(a) Insert the switch shaft through the A Timing Switch Board from the control side of the board and position the switch on the board.

NOTE

There are two small tabs on the switch—one round and one oval. These fit into properly sized holes for switch positioning.

(b) Set the remaining switch board on the switch. Be sure the two plastic nut retainers are in place. Install the

two screws and nuts that hold the boards together (insert from the B Timing Switch board side in the unplated holes), but do not tighten them.

(c) Install the VAR potentiometer using the remaining two screws, but do not tighten them.

(d) Install the VAR shaft (untapered end) in the VAR potentiometer and tighten the set screw with a 0.050 inch hex wrench.

(e) Tighten the four screws holding the assembly together.

l. Trigger Board Removal and Replacement (Figure 5-10).

(1) Remove the horizontal module.

(2) Unplug the three multiconductor connectors.

(3) Unsolder the B Trigger external input and its ground at the rear of the BNC connector.

(4) Remove one screw at top rear of board.

(5) Carefully pull the bottom of the board toward the right until it just unplugs. Then pull the board out away from the module.

(6) Replace the board in reverse order.

m. Source and Coupling Switch Disassembly. These switches are disassembled by removing the one screw holding each set to the board. Once disassembled, the switch contact pads can be cleaned with an eraser (pencil type) and isopropyl alcohol. Reassemble the switches in reverse order.

CAUTION

Do not touch or clean the switch contact wipers as they are easily damaged or contaminated. Whenever the switches are disassembled, place the switches in a container to protect the wipers.

n. Horizontal Board Removal and Replacement (Figure 5-10).

(1) Remove the horizontal module.

(2) Remove the Trigger Board.

(3) Remove both screws holding the A and B Timing Switch Board Assembly. Unplug the assembly and move it far enough toward the top of the module to uncover the Horizontal Board plugs to the Sweep Board.

(4) Remove the horizontal POSITION and A TRIGGER HOLDOFF shaft knobs (see h. above).

(5) Remove the two screws holding the board (left rear corner and right front corner).

(6) Unsolder the A Trigger external input at the BNC connector and remove the board.

(7) Replace the board in reverse order.

o. Sweep Board Removal and Replacement (Figure 5-10).

(1) Remove the horizontal module.

(2) Remove the A and B Timing Switch Board Assembly.

(3) Remove the Trigger Board.

(4) Remove the Horizontal Board.

(5) Unplug the three multiconductor connectors going to front panel controls.

(6) Remove the four screws holding the board to the chassis and remove the board.

(7) Replace the board in reverse order.

p. Graticule Illumination Board Removal and Replacement.

(1) Remove the horizontal module.

(2) Remove the crt.

(3) Unplug the Graticule Illumination Board connector (beside the Graticule illumination potentiometer), and remove the board.

(4) Reinstall the board in reverse order.

q. Hybrid IC Removal and Replacement (Figure 5-12).

CAUTION

When removing the hybrid IC, handle it with care as the ceramic material may break or crack if dropped or hit sharply.

(1) Remove the vertical module.

(2) Release the TRIG VIEW/20 MHz BW switch shaft from the switch using a 0.050 inch hex wrench. Move it away from the hybrid IC.

(3) Release the INVERT switch shaft by holding the shaft and pulling off the gray push button. Rotate the shaft away from the hybrid IC.

(4) Insert a narrow blade screwdriver between the socket (near the lip) and the mounting clip. Carefully twist the screwdriver until the mounting clamp unlatches from the lip. While holding a finger on the mounting clamp to keep it from springing into the air, unlatch the other lip on the same side. Remove the mounting clamp.

(5) Lift out the hybrid IC.

(6) Replace the hybrid IC as follows:

(a) Note the index key on the hybrid IC and the socket, then set the IC into the socket.

(b) Hook one end of the mounting clamp over two of the lips on one end of the socket; hold this end of the clamp so it doesn't spring off the socket. Push the other end of the clamp down until it hooks over the other two lips.

(c) Return to step (3) above and continue the replacement in reverse order of removal.

r. VOLTS/DIV Attenuator Disassembly (Figure 5-13).

(1) Remove the vertical module.

(2) Remove the VAR knob and shaft by loosening the shaft coupling set screw at the VAR potentiometer with a 0.050 inch hex wrench.

(3) Remove the VOLTS/DIV knob with skirt and shaft by pulling it away from the module.

(4) Remove the vertical POSITION knob with shaft (see h. above).

(5) Remove the attenuator shield by removing its four holding screws and the ground braid screw from the module chassis (on channel 2, unsolder the ground braid from the lug on the shield).

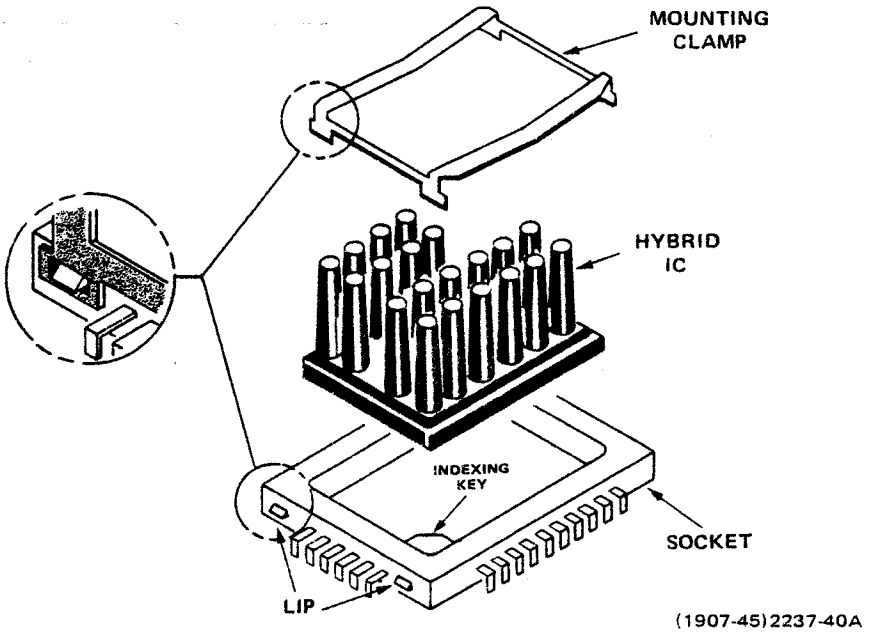

Figure 5-12. Hybrid IC removal.

(6) Remove the small grounding bracket at the front right part of the attenuator assembly by removing the nut just above the BNC connector and the screw under the front right corner of the assembly.

(7) Unsolder the resistor and adjustable capacitor tab from the BNC center conductor.

(8) Remove the BNC connector by unscrewing the large nut and pulling the connector out through the front panel.

NOTE

On some early instruments, the vertical input BNC connector lock washers are secured with Loctite. Later instruments use Loctite without lock washers. Once the Loctite seal on a lock washer is broken, it is recommended that the washer be removed and the nut secured with a drop of Loctite. Hardened Loctite can be softened with low temperature heat between 80° — 100°F.

(9) Unplug the multiconductor connector from the Vertical Board (located near the rear of the attenuator).

(9.1) Remove large shield on soldered side of board (be careful not to lose the two washers under the shield in the holes near the front of the module. They must be installed under the shield in the holes).

(10) Remove the long, narrow shield on the soldered side of the Vertical Board.

(11) Unsolder the one pin connection under the shield removed in (10) above.

(12) Remove the remaining three screws holding the attenuator assembly to the chassis (one located on the soldered side of the Vertical Board near the top front corner; the other two are located on the chassis under the attenuator).

(13) Carefully remove the attenuator assembly. Ensure that the 4 pins near the pin unsoldered in (11) above are disconnected without damage and note their orientation for reassembly reference.

(14) Pull off the AC-GND-DC lever (may need to be very carefully pried away from the cam assembly with a small, thin blade screwdriver).

(15) Remove the three screws holding the cam bearing sections to the circuit board. Then lift the cam out of the assembly.

(16) Remove the three screws holding the contact retainer to the circuit board. Being careful that the two switch contact assemblies (wipers) do not fall out, or otherwise get damaged, lift the retainer out of the assembly. If the contact assemblies stay in the switch, lift them out. If they stick to the retainer, carefully pull them off.

CAUTION

If the contact assemblies are not to be immediately reinstalled, put them in a protective container to prevent damage or contamination.

(17) The switch contact pads on the circuit board can be cleaned with an eraser (pencil type) and isopropyl alcohol.

(18) The cam can be removed from the end bearing section by pulling the cam rotor out of the end bearing section with a twisting motion.

(19) Reassemble the switch as follows:

(a) Install the contact assemblies on the contact retainer as shown in Figure 5-13B. Install these parts in the attenuator assembly. Be sure the plastic alignment posts on the contact retainer are properly inserted in the circuit board. Install the three contact retainer screws, but don't fully tighten them. Very carefully push the end contact assembly down to its pad and check the alignment. Move the contact retainer to align the contact assembly and pad, then tighten the three contact retainer screws.

(b) Install each of the two cams in an end bearing section. Set the notched detent end of the cam on the section, then push it into the bearing until it seats (the cam may need to be rotated to get the detent notches past the detent rollers).

NOTE

If new cam parts are being installed or the cam has been washed, very lightly lubricate the detent notches and cam ends with silicone grease.

WARNING

Handle silicone grease with care as it can cause skin or eye irritation. Wash hands throughly after use.

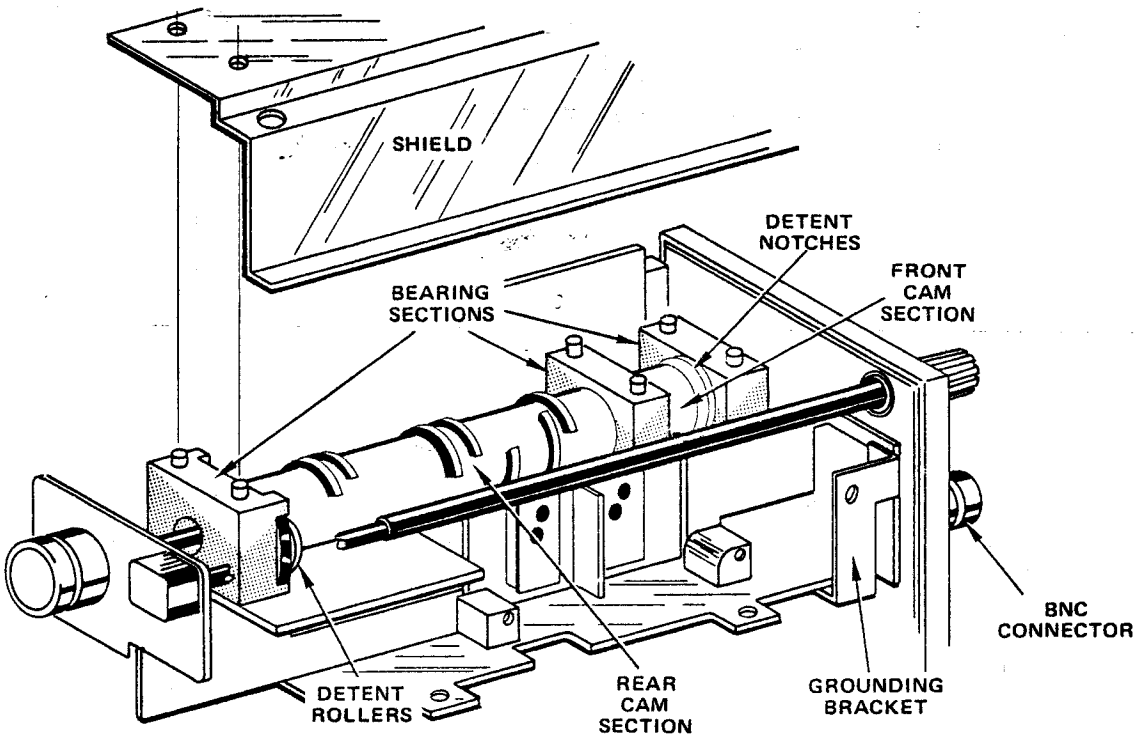

A. ATTENUATOR CAM AND BEARING SECTIONS

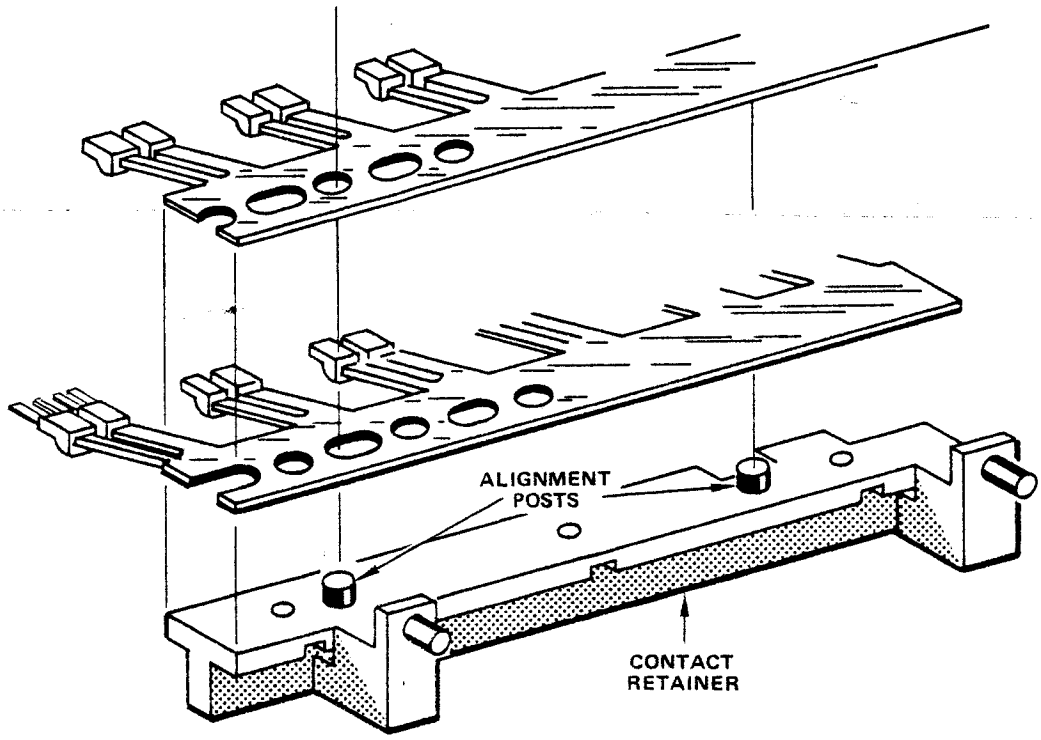

B. ATTENUATOR CONTACT ASSEMBLIES

2237-56

Figure 5-13. VOLTS/DIV attenuator dissassembly.

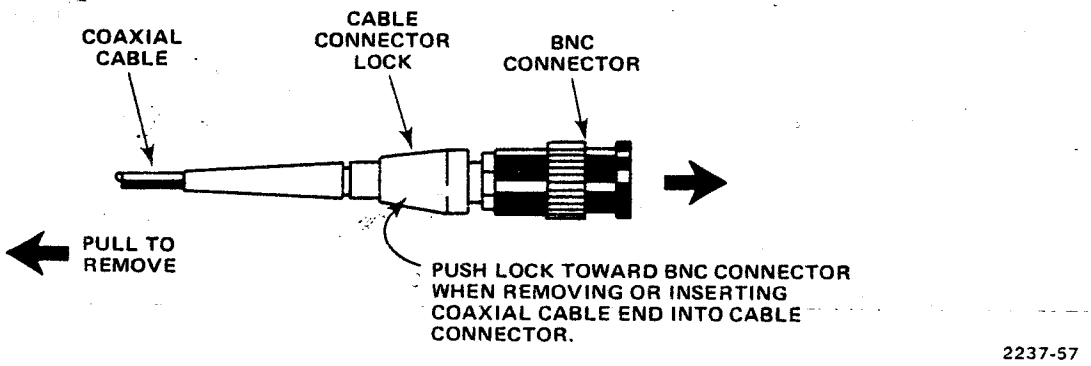

Figure 5-14. Probe BNC connector removal and replacement.

(c) Assemble the cam and three bearing sections so the attaching nuts are facing downward. Hold these parts together and set them into the attenuator assembly with the attaching nuts toward the circuit board. Install the three cam bearing section screws.

(d) Return to step (14) above and continue the reassembly in reverse order of disassembly.

s. Probe Disassembly and Repair.

(1) BNC Connector. The BNC connector on the P6101 probe is removed and replaced as shown in Figure 5-14.

(2) Compensation Box. To remove the compensation box and BNC connector section of the P6104 probe, grasp the retainer cover next to the compensation box with one hand. Then grasp the probe connector adjacent to the retainer cover with the other hand and pull the pieces apart. To reinstall the two parts, just push them together.

(3) Probe Head. The probe head on either the P6101 or P6104 probes can be removed by holding the probe head and the cable connector and pulling them apart.

(4) Probe Cable. By performing step (3) and either (1) or (2) above, the probe cable can be separated into one piece.

t. Light-Emitting Diode (LED) Replacement (Figure 5-15).

NOTE

When unplugging the LED connectors, note which wire color is connected to the LED cathode. The LED shouldn't be damaged if reverse connected, but it won't light.

(1) Remove the LED from the front panel by pushing it out of the panel from the front.

(2) Unplug the LED connector.

(3) Reinstall the LED in reverse order.

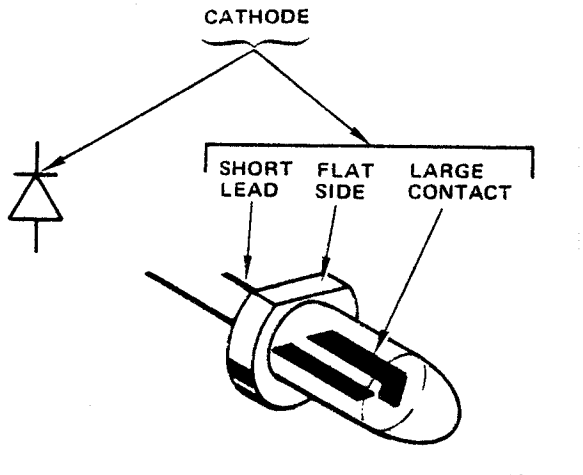

Figure 5-15. Light-emitting diode (LED) lead identification.

u. Push Button, Shaft Extension, and Shaft Extension Adapter Removal and Replacement.

(1) To remove the small gray buttons on push button switches, hold the switch shaft and pull the button off. To replace them, hold the shaft and push the button on.

(2) To remove a shaft extension or its adapter, very carefully pry the connecting joint apart and pull the extension or adapters away from its connecting part.

5-6. CALIBRATION. The following instructions contain complete adjustment procedures for the instrument. When completed, the instrument should meet its original performance characteristics. The procedures are intended to be done in the sequence listed. Test equipment needed for the procedures is listed in Table 2-1. Whenever one procedural step interacts with another, an Interaction Note is provided.

a. Preliminary Calibration Set-Up Procedure:

(1) Remove the top cabinet.

WARNING

To prevent electrical shock with the cabinet removed, do not touch exposed connections or components when the instrument is turned on, or connected to a power source.

(2) Turn on the instrument and allow at least five minutes warm-up.

NOTE

Instrument must be calibrated in an ambient temperature between +20° and +30°C (+68° to +86°F) to meet performance characteristics.

(3) Preset front panel controls as follows (set both vertical channels and horizontal sweeps the same unless otherwise indicated):

VOLTS/DIV	.5 (1X window)
VAR	Fully clockwise (in detent)
AC-GND-DC	DC
POSITION (Vertical)	Midrange
VERT MODE	CH 1
20 MHz BW	In (off)
INVERT	Out (off)
SCALE ILLUM	Fully counterclockwise
HORIZ DISPLAY	A
TRIG MODE	AUTO
COUPLING	AC
SOURCE	NORM
SLOPE	+ (out)
A AND B TIME/DIV	.5 μs
VAR	Fully clockwise (in detent)
DELAY TIME POS	0.0
POSITION (Horizontal)	Midrange
A TRIGGER HOLDOFF	NORM (in detent)
X10 MAG	Out (off)

(4) Do not preset ASTIG and TRACE ROTATION. They will be adjusted later.

(5) Throughout the procedure INTEN, FOCUS, and LEVEL may be adjusted as necessary to obtain a visible, well defined, and stable display. Occasionally, these controls may be set by a procedural step.

b. +32 Volt Power Supply (Figure 5-16).

(1) Connect a digital voltmeter between +32 Volt test point and GND.

(2) Adjust +32 V ADJ, R736 for a +32.0 voltage reading.

(3) Disconnect the voltmeter.

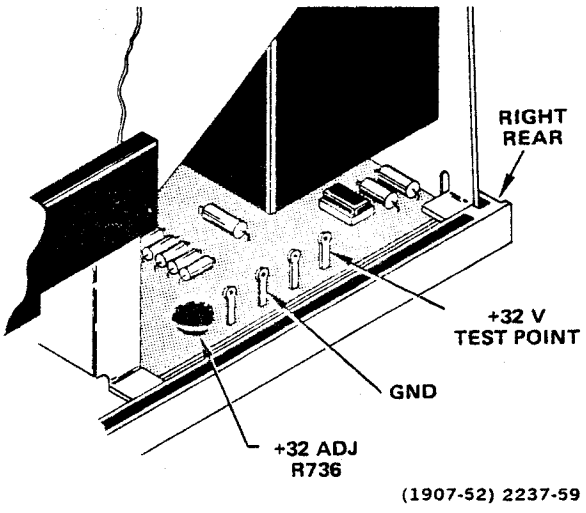

Figure 5-16. +32 volt test point and adjustment location.

c. **Crt Bias (Figures 5-17 and 5-18).**

(1) Set A AND B TIME/DIV to X-Y.

(2) Connect a digital voltmeter between TP526 and GND.

(3) Set INTEN for about +20 volts (within 0.5 volt) voltage reading.

(4) Disconnect the voltmeter.

(5) Adjust FOCUS and ASTIG for a well defined spot (if spot is not visible, adjust CRT BIAS, R532 until it is; then adjust FOCUS and ASTIG).

(6) Adjust CRT BIAS, R532 until the spot is just visible.

d. **Z-Axis Compensation (Figure 5-17).**

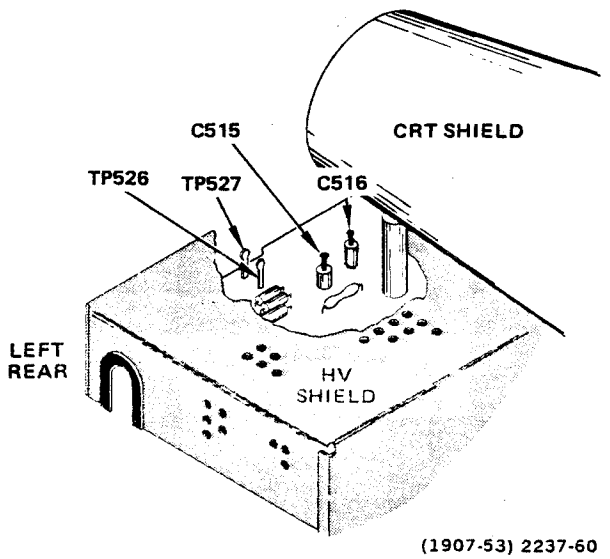

Figure 5-17. Crt and Z-Axis test point and adjustment locations.

(1) Set A TIME/DIV to .5 μs.

(2) Set INTEN for a low intensity display.

(3) Connect a test oscilloscope between TP527 and GND with a 10X probe. Set test oscilloscope TIME/DIV for 2 μs, adjust for a four division, positive going pulse display, and reset test oscilloscope TIME/DIV to 1 μs.

NOTE

A high voltage oscillator signal will be visible, but should be ignored when making the adjustment in the next step.

(4) Adjust C515 and C516 for the squarest front corner on the displayed pulse.

(5) Disconnect the test oscilloscope.

e. **Y-Axis Alignment (Figure 5-18).**

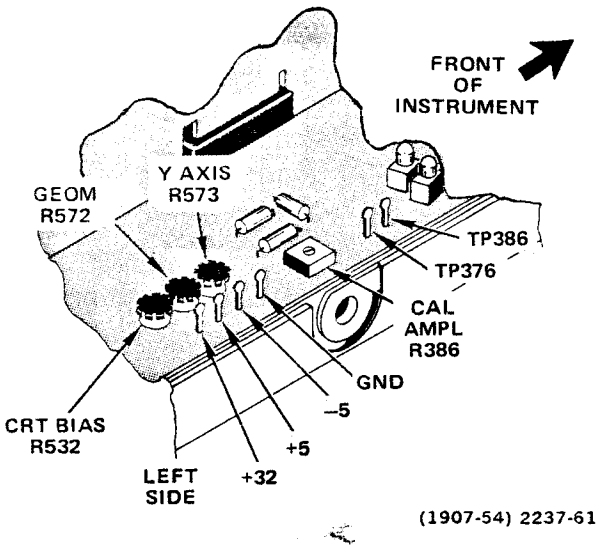

Figure 5-18. Crt and Calibration test point and adjustment locations.

(1) Set A AND B TIME/DIV to 1 ms and CH 1 AC-GND-DC to GND.

(2) Vertically position the display to the center horizontal graticule line.

(3) Adjust TRACE ROTATION to align the trace with the center horizontal graticule line.

(4) Set CH 1 AC-GND-DC to DC.

(5) Connect a time mark generator to CH 1 input through a 50 ohm BNC cable and 50 ohm termination. Set the generator for one millisecond time marks.

(6) Set CH 1 VOLTS/DIV for a dipslay of greater than 8 divisions. Adjust vertical POSITION to place baseline of display below the bottom graticule line.

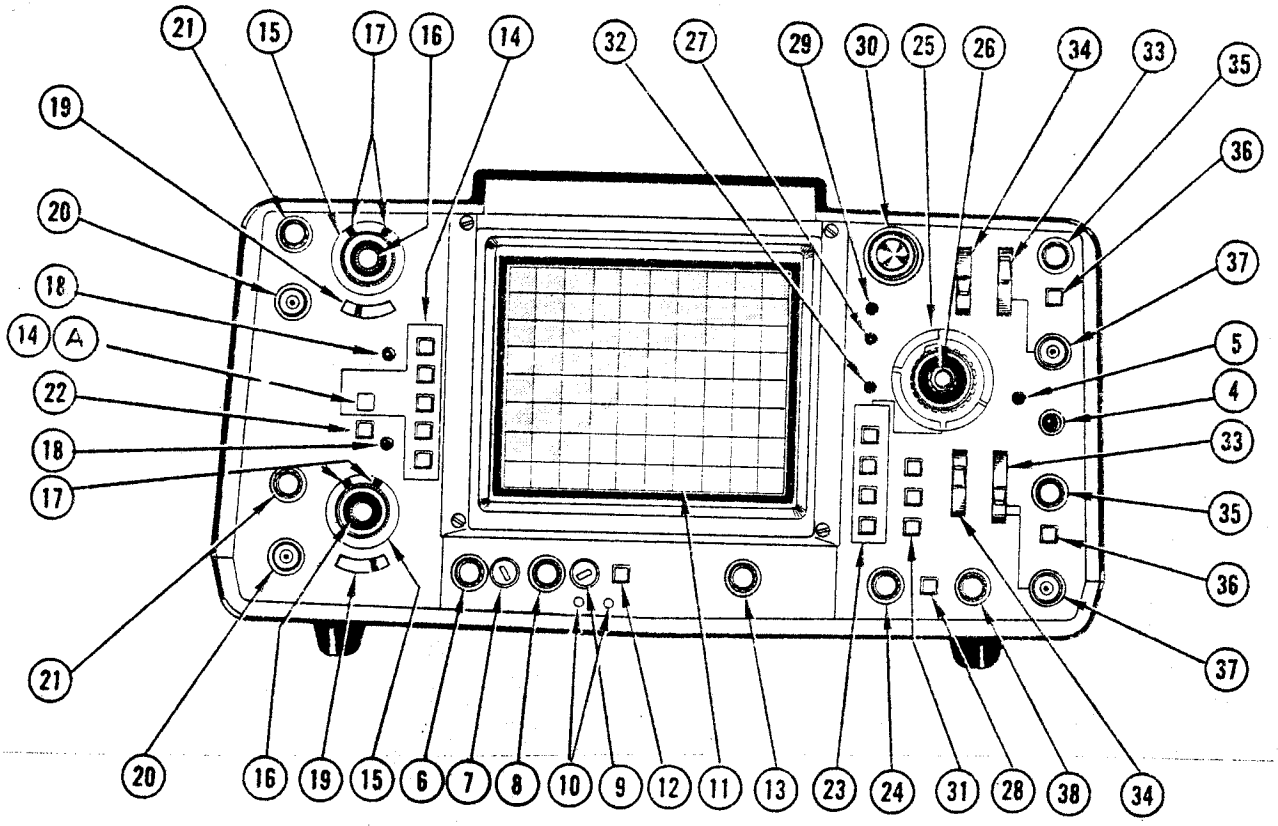

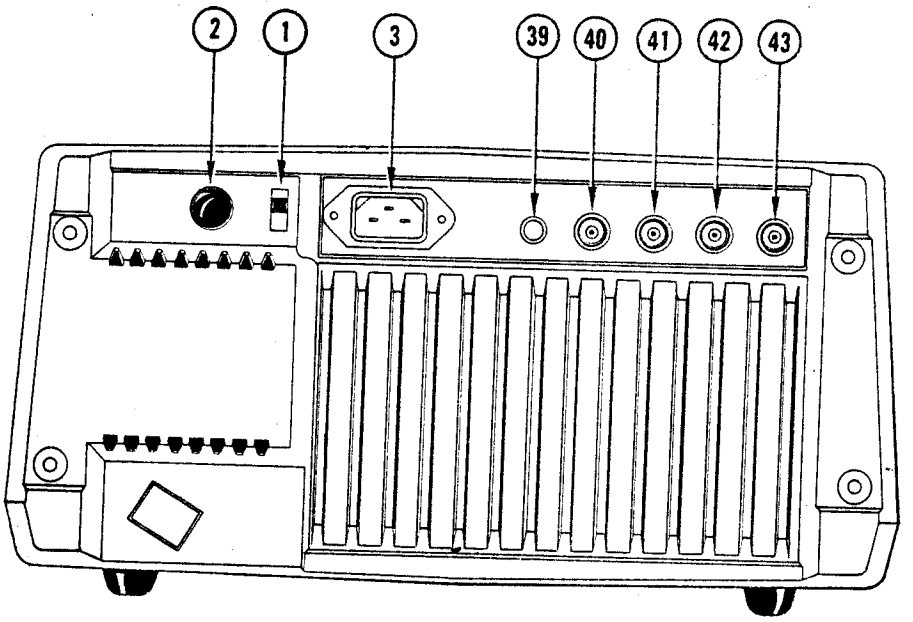

NOTE: CALLOUT NUMBERS ARE USED WITH TABLE 4-2

For Service Manuals Contact
MAURITRON TECHNICAL SERVICES
8 Cherry Tree Rd. Chinnor
Oxon OX9 4QY
Tel:- 01844-351694 Fax:- 01844-352554
Email:- enquiries@mauritron.co.uk

2237-5A

Figure 6-2. Controls, connectors & indicators.

DIAGRAMS AND CIRCUIT BOARD ILLUSTRATIONS

Symbols and Reference Designators

Electrical components shown on the diagrams are in the following units unless noted otherwise:

Capacitors = Values one or greater are in picofarads (pF).
Values less than one are in microfarads (μF).

Resistors = Ohms (Ω).

Graphic symbols and class designation letters are based on ANSI Standard Y32.2-1975.

Logic symbology is based on ANSI Y32.14-1973 in terms of positive logic. Logic symbols depict the logic function performed and may differ from the manufacturer's data.

The overline on a signal name indicates that the signal performs its intended function when it goes to the low state.

Abbreviations are based on ANSI Y1.1-1972.

Other ANSI standards that are used in the preparation of diagrams by Tektronix, Inc. are:

Y14.15, 1966	Drafting Practices.
Y14.2, 1973	Line Conventions and Lettering.
Y10.5, 1968	Letter Symbols for Quantities Used in Electrical Science and Electrical Engineering.

The following special symbols may appear on the diagrams:

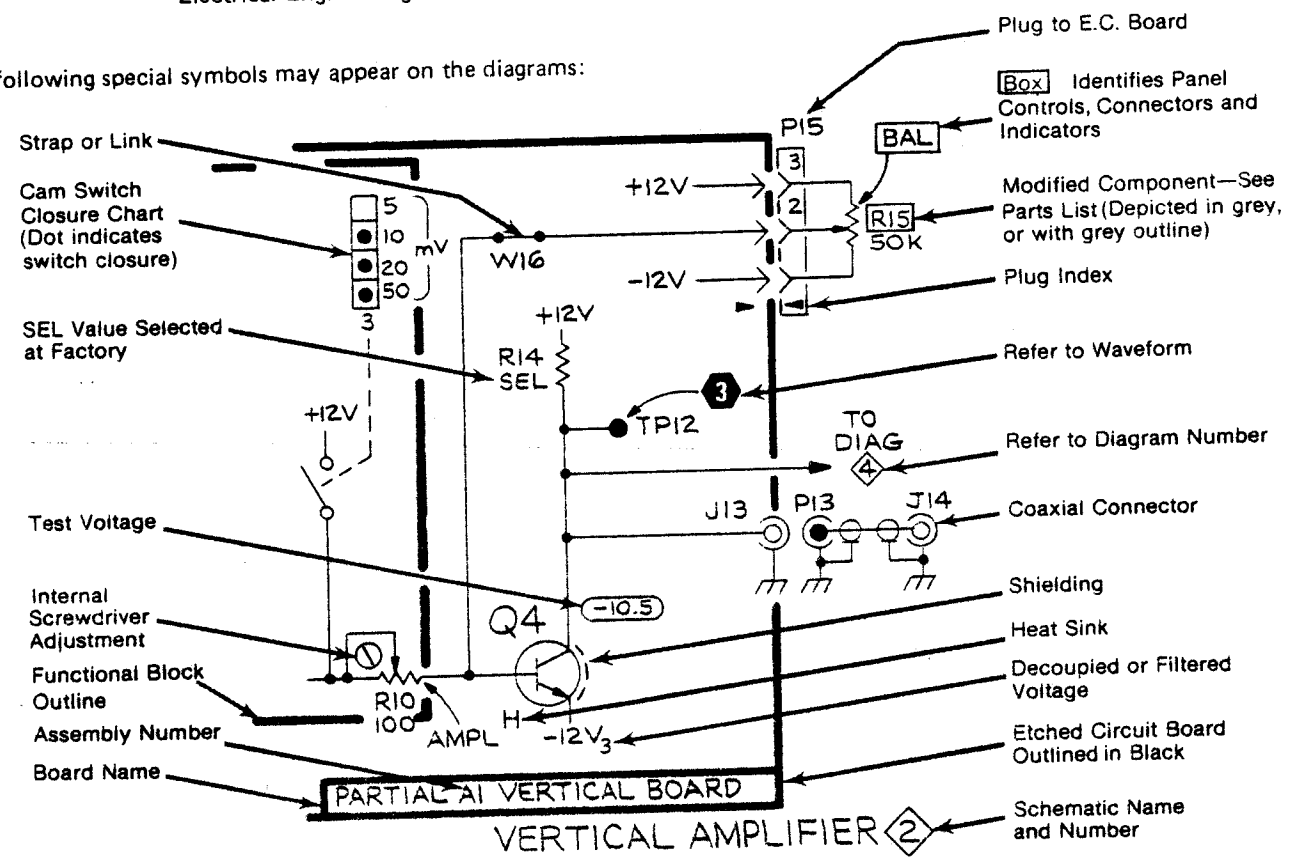

Figure 6-1. Schematic symbols.

(3) An explanation of the symbols used on the diagrams is shown in Figure 6-1.

6-3. WAVEFORMS AND VOLTAGE TEST CONDITIONS.

a. Waveform Conditions. The following test setup is used for all waveforms, except as noted. This uniform setup simplifies troubleshooting. The test oscilloscope trigger setup allows time comparison (horizontally) between the waveforms. Use an AN/USM-425(V)1, Tektronix 465M, or equivalent for waveforms.

(1) Instrument Setup.

(a) Connect a P6104 Probe (10X) to CH 1 input and the probe tip to the CALIBRATOR.

(b) Set the instrument controls as follows:

VOLTS/DIV (both)	.2
AC-GND-DC (both)	DC
VERT MODE	CH 1
HORIZ DISPLAY	MIXED
SOURCE (both)	CH 1
SLOPE (both)	OUT: +
A TIME/DIV	.2 ms
B TIME/DIV	50 μs
LEVEL (both)	For a stable mixed display

(2) Test Oscilloscope Setup.

(a) Connect a 50 ohm unterminated BNC cable between the A EXT Trigger input of the test oscilloscope and the +A GATE of the oscilloscope under test.

(b) Set the test oscilloscope controls as follows:

A Coupling	Dc
A Slope	Out: +
A Source	Ext ÷ 10
Vert Mode	CH 1
CH1 ac-gnd-dc	Dc
A Level	Adjust so Trig Ready indicator is lit. Push Trig View to verify triggering on the positive slope.

b. Voltage Conditions. The voltages were taken between the indicated test point and chassis ground using a Tektronix DM 501A digital multimeter. Any change from the following setup may change some of the indicated voltages. Set controls as follows (where controls are duplicated, set both controls the same):

VOLTS/DIV	5 m
AC-GND-DC	GND
POSITION (Vertical)	Midrange
VERT MODE	CH 2
DELAY TIME POS	5.00
HORIZ DISPLAY	A
TIME/DIV	1 ms
POSITION (Horizontal)	Midrange
INTEN	Fully counterclockwise
FOCUS	Fully counterclockwise
SCALE ILLUM	Midrange
TRIG MODE	NORM
COUPLING	AC
SOURCE	CH 1
SLOPE	+
LEVEL	Midrange

NOTE

These settings place the instrument in a quiscent operating state for making dc voltage measurements.

For Service Manuals Contact
MAURITRON TECHNICAL SERVICES
8 Cherry Tree Rd. Chinnor
Oxon OX9 4QY
Tel:- 01844-351694 Fax:- 01844-352554
Email:- enquiries@mauritron.co.uk

SECTION VI
DIAGRAMS

6-1. INTRODUCTION. This section contains diagrams and associated data for maintaining the instrument. Included are front and rear panel control, connector, and indicator layouts; schematic diagrams with voltages and waveforms, and circuit board layouts with grid chart component locators.

6-2. ARRANGEMENT.

a. Schematic Diagrams. Schematic diagrams are drawn to group circuit functions; therefore, any one diagram may include portions of any number of circuit boards or assemblies. To aid in tracing circuits from one diagram to another, each diagram is identified with a name and a number in a diamond shaped box. Circuits going from one diagram to another identify the destination component and destination diagram number.

b. Symbols and Reference Designators.

(1) Electrical components shown on the diagrams are in the following units unless noted otherwise.

Capacitors	Values one or greater are in picofarads (pF). Values less than one are in microfarads (μF).
Resistors	Ohms (Ω).

(2) Table 6-1 is a partial listing of prefix letters used as reference designators. These are used to identify components or assemblies on the diagrams. A complete listing is contained in MIL STD 16 and also in the ANSI standard.

Table 6-1. Reference Designators

REFERENCE DESIGNATOR	DESCRIPTION	REFERENCE DESIGNATOR	DESCRIPTION
A	Assembly, separable or repairable (circuit board, etc.)	LR	Inductor/resistor combination
AT	Attenuator, fixed or variable	M	Meter
B	Motor	P	Connector, movable portion
BT	Battery	Q	Transistor or silicone-controlled rectifier
C	Capacitor, fixed or variable	R	Resistor, fixed or variable
CB	Circuit breaker	RT	Thermistor
CR	Diode, signal or rectifier	S	Switch or contactor
DL	Delay line	T	Transformer
DS	indicating device (lamp)	TC	Thermocouple
E	Spark Gap, Ferrite bead	TP	Test point
F	Fuse	U	Assembly, inseparable or nonrepairable (integrated circuit, etc.)
FL	Filter	V	Electron tube
H	Heat dissipating device (heat sink, heat radiator, etc.)	VR	Voltage regulator (zener diode, etc.)
		W	Wirestrap or cable
HR	Heater	Y	Crystal
HY	Hybrid circuit	Z	Phase shifter
J	Connector, stationary portion		
K	Relay		
L	Inductor, fixed or variable		

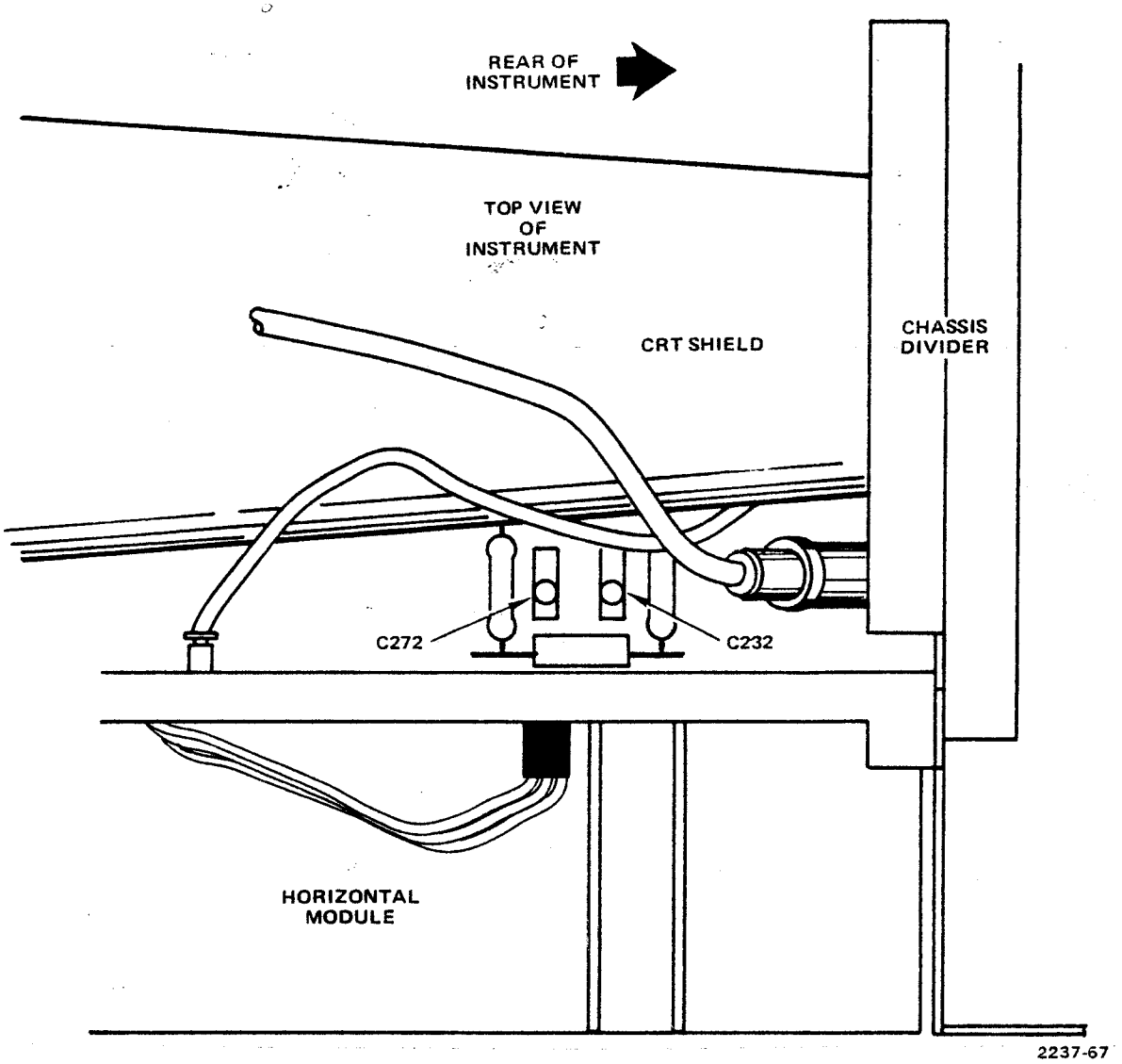

Figure 5-24. 5 nanosecond timing adjustment locations.

For Service Manuals Contact
MAURITRON TECHNICAL SERVICES
8 Cherry Tree Rd, Chinnor
Oxon OX9 4QY
Tel:- 01844-351694 Fax:- 01844-352554
Email:- enquiries@mauritron.co.uk

(10) Very slightly adjust C2784 so the time marker aligns with the center vertical graticule line.

INTERACTION NOTE

C2784 and C2684 may interact; therefore, repeat this procedure until no further adjustment is needed.

(11) Set DELAY TIME POS to 0.0.

(12) Continue to the next procedure.

t. 5 ns Timing (Figure 5-24).

(1) Set controls as follows:

HORIZ DISPLAY	A
A AND B TIME/DIV	.05 μs
X10 MAG	In (on)

(2) Set time mark generator for 10 nanosecond time markers.

(3) Adjust C232 and C272 for one time marker per two divisions.

INTERACTION NOTE

The adjustment screws for C232 and C272 should be adjusted to about the same height; otherwise horizontal linearity may be degraded.

(4) Check the beginning and end of the .05 microsecond sweep using step 19 in Table 5-1 and excluding the first and last 40 nanoseconds of the sweep. If necessary, slightly readjust C232 and C272 for one time marker per two divisions.

(5) Disconnect the generator.

u. X Gain (Figure 5-22).

(1) Set controls as follows:

CH 1 VOLTS/DIV	5 m
VERT MODE	CH 2
A AND B TIME/DIV	X-Y
X10 MAG	Out (off)

(2) Connect a calibration generator STD AMPL OUTPUT to the CH 1 input through a 50 ohm BNC cable. Set the generator for a 50 millivolt output.

(3) Adjust X GAIN, R2916 for a 10-division (horizontal) display.

(4) Disconnect the generator.

For Service Manuals Contact
MAURITRON TECHNICAL SERVICES
8 Cherry Tree Rd, Chinnor
Oxon OX9 4QY
Tel:- 01844-351694 Fax:- 01844-352554
Email:- enquiries@mauritron.co.uk

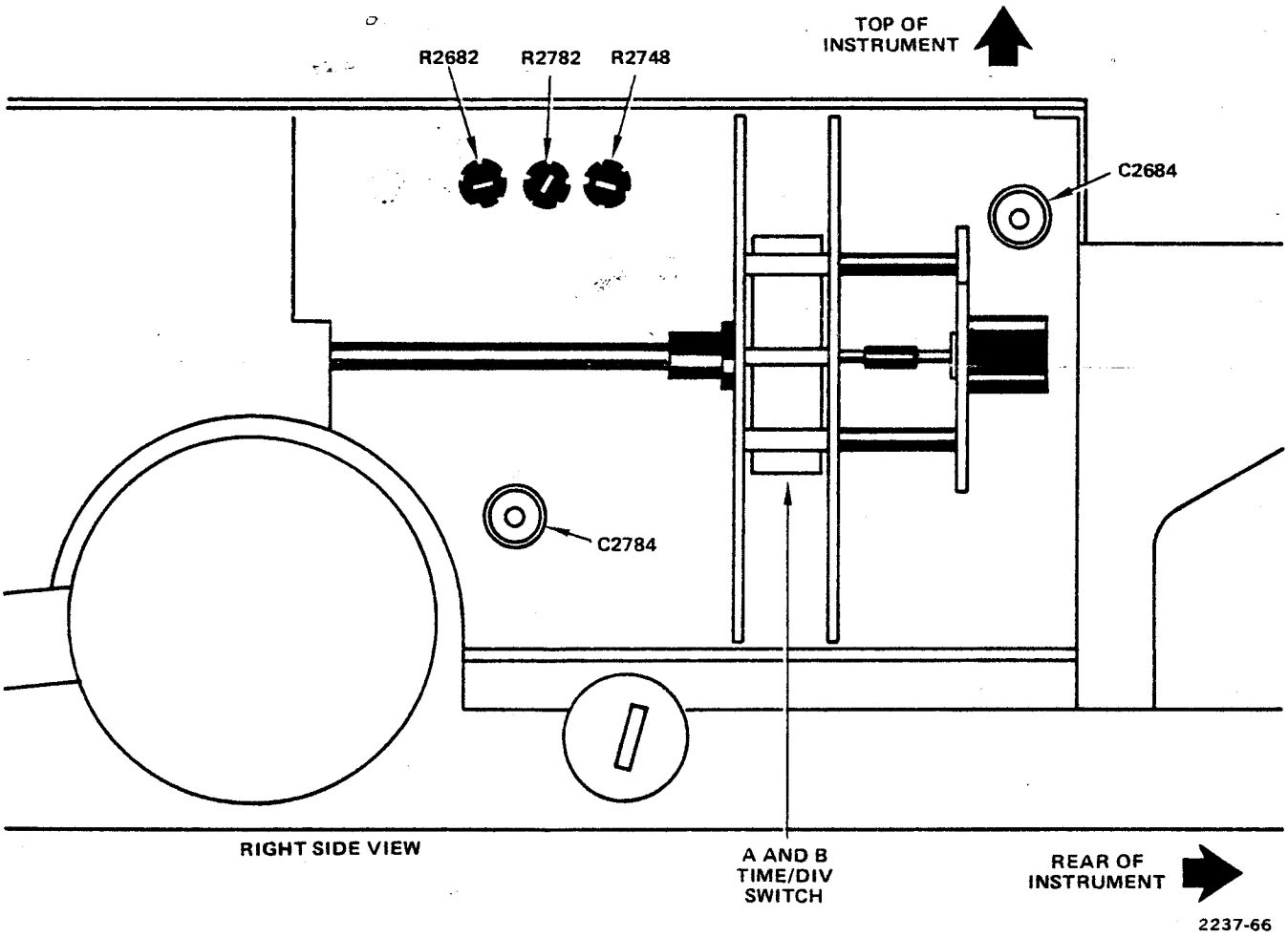

Figure 5-23. Sweep adjustment locations.

(2) Set time mark generator for one millisecond time markers.

(3) Set horizontal POSITION to align the first time marker with the left graticule line.

(4) Adjust R2782 for one time marker per division.

(5) Continue to the next procedure.

s. .5 μs Timing (Figure 5-23).

(1) Set A TIME/DIV to .5 μs and HORIZ DISPLAY to A.

(2) Set time mark generator for 0.5 microsecond time markers.

(3) Adjust C2784 for one time marker per division.

(4) Set HORIZ DISPLAY to B DLY'D.

(5) Set DELAY TIME POS to 1.00, then rotate it toward 0.0 until there is one time marker per division and a time marker is aligned with the left vertical graticule line.

(6) Adjust C2684 for one time marker per division.

(7) Set B TIME/DIV to .05 μs and DELAY TIME POS to 1.00.

(8) Adjust horizontal POSITION and align the time marker with the center vertical graticule line.

(9) Set DELAY TIME POS to 9.00.

INTERACTION NOTE

R2782 and R2748 may interact with each other; therefore, repeat steps (8) through (11) until no further adjustment is needed.

(12) Set DELAY TIME POS to 0.0.

(13) Continue to the next procedure.

p. Horizontal Gain (Figure 5-22).

(1) Set HORIZ DISPLAY to A.

(2) Adjust X1 GAIN, R2923 until the 1st and 11th time markers are exactly aligned with a graticule line. There should be one time marker per division within 0.25 minor divisions.

(3) Set X10 Mag to In (on).

(4) Set time mark generator for .1 ms time markers.

(5) Adjust X10 GAIN, R2925 for one time marker per division.

(6) Continue to the next procedure.

q. Magnifier Registration (Figure 5-22).

(1) Set X10 MAG to In (on).

(2) Adjust horizontal POSITION until the sweep starts at the center vertical graticule line.

(3) Set X10 MAG to Out (off).

(4) Adjust MAG REG, R2932 until the sweep starts at the center vertical graticule line.

INTERACTION NOTE

R2932 and horizontal POSITION may interact; therefore, repeat steps (1) through (4) until no further adjustment of R2932 is needed.

(5) Continue to the next procedure.

r. B Sweep Timing (Figure 5-23).

(1) Set controls as follows:

X10 MAG	Out (off)
A AND B TIME/DIV	1 ms
HORIZ DISPLAY	B DLY'D

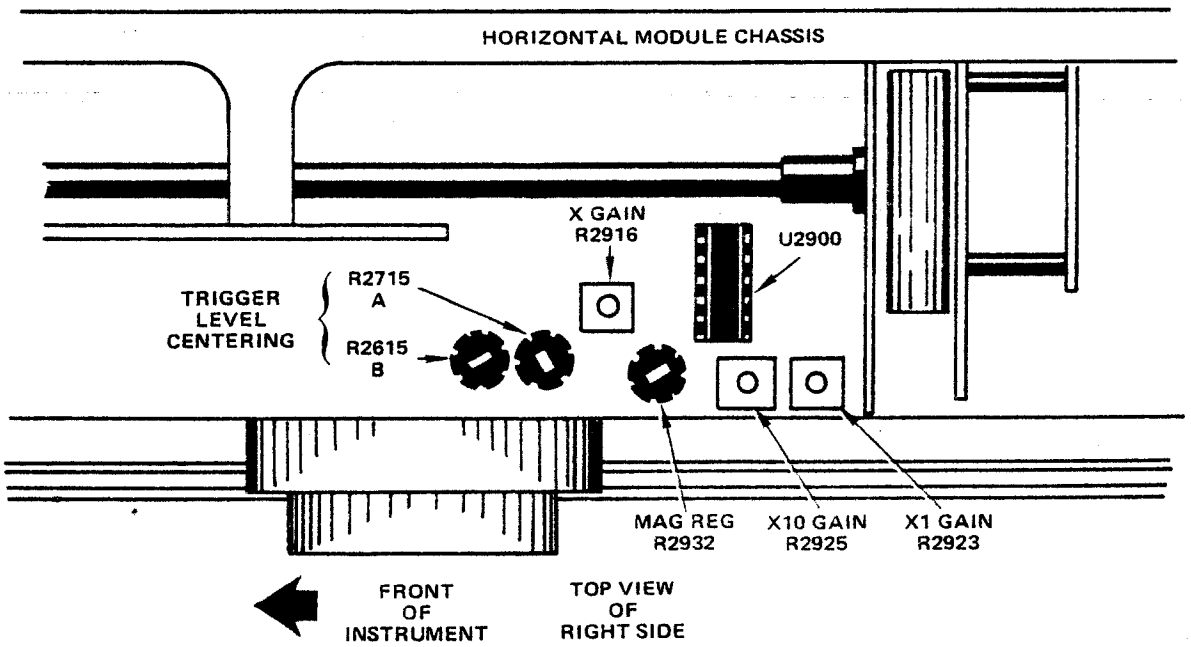

Figure 5-22. Trigger and horizontal adjustment locations.

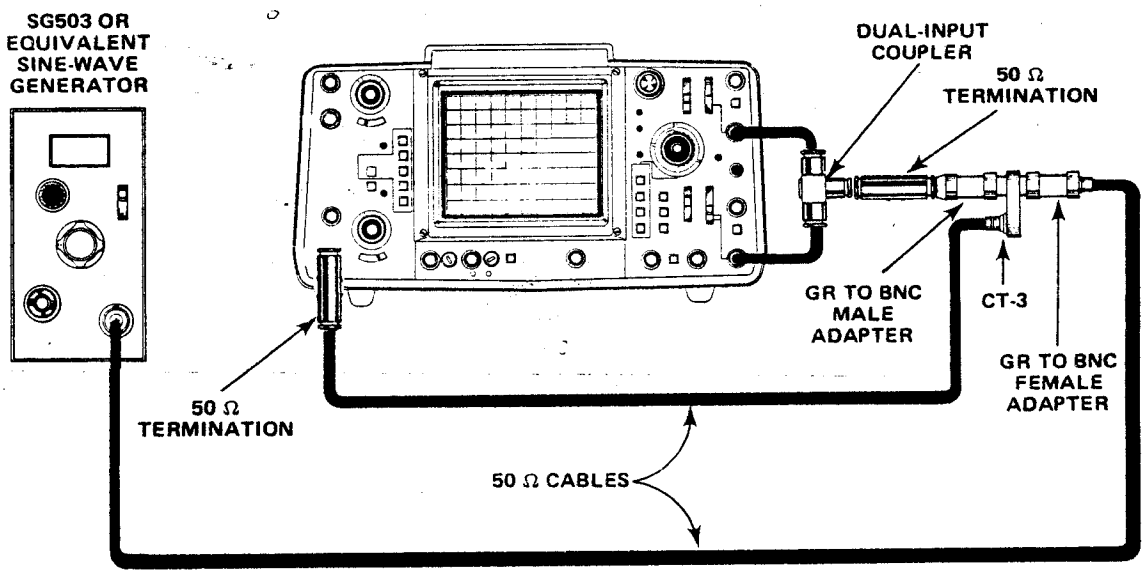

2237-64

Figure 5-21. External trigger centering setup.

(9) Set B COUPLING to DC.

(10) Adjust B TRIGGER LEVEL CENTERING, R2615 for a stable display.

INTERACTION NOTE

B LEVEL and R2615 may interact with each other; therefore, repeat steps (2) through (5) until no further adjustment of R2615 is needed.

(11) Disconnect the sine wave generator.

o. Sweep Start-Stop (Figure 5-23).

(1) Set controls as follows:

VERT MODE	CH 1
CH 1 VOLTS/DIV	.5
A TIME/DIV	1 ms
B TIME/DIV	5 μs
HORIZ DISPLAY	A INTEN
A SOURCE	NORM
B SOURCE	STARTS AFTER DELAY
COUPLING	AC

(2) Connect a time mark generator to the CH 1 input through a 50 ohm BNC cable and 50 ohm termination. Set the generator for 1 millisecond time markers.

(3) Set DELAY TIME POS to 1.00.

(4) Adjust R2782 so the second time marker is intensified.

(5) Set DELAY TIME POS to 9.00.

(6) Adjust R2748 so the tenth time marker is intensified.

INTERACTION NOTE

R2782 and R2748 may interact with each other; therefore, repeat steps (3) through (6) until no further adjustment is needed.

(7) Set HORIZ DISPLAY to B DLY'D and horizontally position the start of sweep within the graticule area.

(8) Set DELAY TIME POS to 1.00.

(9) Very slightly adjust R2782 until the time marker starts at the beginning of the sweep.

(10) Set DELAY TIME POS to 9.00.

(11) Very slightly adjust R2748 until the time marker starts at the beginning of the sweep.

NOTE

When making the next adjustment, set CH 2 VOLTS/DIV to .1 for a 0.2 division signal and .2 for a 0.1 division signal.

(6) Adjust R2245 and A LEVEL so a stable display is obtained with a 0.2-division display, but not with a 0.1-division display.

NOTE

If R2245 is set too sensitive, double triggering may occur at low frequencies. To desensitize R2245, adjust A LEVEL until the display just double triggers. Then slightly readjust R2245 until the double triggering disappears.

(7) Set CH 2 VOLTS/DIV to 5 m and A AND B TIME/DIV to 5 μs.

(8) Repeat step (4) above.

(9) Set CH 2 VOLTS/DIV to 20 m and adjust A LEVEL for a stable display.

(10) Set controls as follows:

VERT MODE	CH 1
HORIZ MODE	B DLY'D
B SOURCE	CH 1
B LEVEL	0
A AND B TIME/DIV	5 μs

(11) Set R2185 to midrange.

(12) Adjust R2183 so trace starts at the same point when switching B SLOPE between − (in) and + (out).

(13) Set CH 1 VOLTS/DIV to .1, A AND B TIME/DIV to 50 μs, and B SLOPE to + (out).

NOTE

When making the next adjustment, set CH 1 VOLTS/DIV to .1 for a 0.2-division display and .2 for a 0.1-division display.

(14) Adjust R2185 and B LEVEL so a stable display is obtained with a 0.2-division display, but not with a 0.1-division display.

NOTE

If R2185 is set too sensitive, double triggering may occur at low frequencies. To desensitize R2185, adjust B LEVEL until the display just double triggers, then slightly readjust R2185 until the double triggering disappears.

(15) Set CH 1 VOLTS/DIV to 5 m and A AND B TIME/DIV to 5 μs.

(16) Repeat step (12) above.

(17) Disconnect the generator.

n. External Trigger Centering (Figures 5-21 and 5-22).

(1) Set controls as follows:

CH 2 VOLTS/DIV	5 m
VERT MODE	CH 2
HORIZ DISPLAY	A
A AND B TIME/DIV	5 μs
A SOURCE	EXT
B SOURCE	EXT

(2) Set A COUPLING to AC.

(3) Adjust A LEVEL for a stable display.

(4) Set A COUPLING to DC.

(5) Adjust A TRIGGER LEVEL CENTERING, R2715 for a stable display.

INTERACTION NOTE

A LEVEL and R2715 may interact with each other; therefore, repeat steps (2) through (5) until no further adjustment of R2715 is needed.

(6) Set HORIZ DISPLAY to B DLY'D

(7) Set B COUPLING to AC.

(8) Adjust B LEVEL for a stable display.

(20) Move the generator output from CH 2 input to CH 1 input.

(21) Set CH 1 VOLTS/DIV to 5 m and VERT MODE to CH 1.

(22) Adjust CH 1 vertical POSITION so top of waveform is on the center horizontal graticule line.

(23) Adjust C4173, R4173, C4174, and R4174 for the best transient response of the waveform. Total aberrations should not exceed ±3% or 3% peak-to-peak (+0.15 division, −0.15 division, or 0.15 division peak-to-peak).

INTERACTION NOTE

If CH 1 response cannot be adjusted within requirements, very slightly touch up the adjustment in step (12) above. Then recheck the CH 2 response and rise time of both channels.

(24) Set CH 1 VOLTS/DIV to 20 m and TIME/DIV to .1 μs.

(25) Adjust R4167 for the best front corner of the waveform.

(25.1) Set CH 1 VOLTS/DIV to 50 m.

(25.2) Adjust generator for a 5-division display.

(25.3) Adjust R4108 for the best flat top on the front corner of the waveform.

(26) Set CH 1 VOLTS/DIV to .5.

(27) Remove the 10X attenuator from the CH 1 input.

(28) Adjust R4106 for the best front corner of the waveform.

(29) Disconnect the generator.

m. Trigger Hysteresis and Slope Centering (Figure 5-20).

(1) Set controls as follows:

VOLTS/DIV	5 m
A AND B TIME/DIV	5 μs
X10 MAG	Out (off)
VERT MODE	CH 2
A LEVEL	0
A SOURCE	CH 2

(2) Connect a sine wave generator to CH 1 and CH 2 through a 50 ohm BNC cable, 50 ohm termination, and dual input coupler. Set the output for 50 kilohertz and adjust for a 4-division display.

(3) Set R2245 at midrange.

(4) Adjust R2249 so trace starts at the same point when switching A SLOPE between − (in) and + (out).

(5) Set CH 2 VOLTS/DIV to .1, A AND B TIME/DIV to 50 μs, and A SLOPE to + (out).

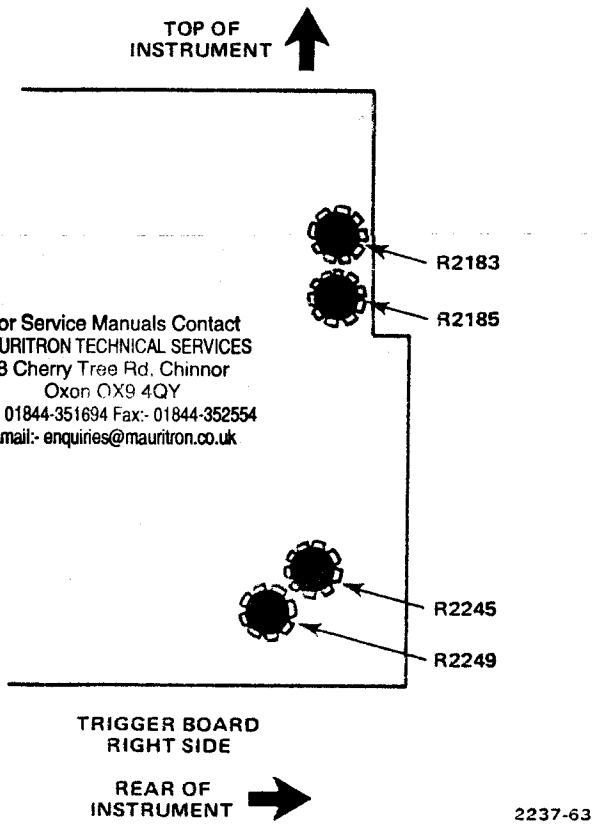

Figure 5-20. Trigger hysteresis and slope centering adjustment locations.

(3) Set the generator output level for a 5-division display. During adjustments, reset the generator output as necessary to maintain a 5-division display.

NOTE

Use a low capacitance tuning tool when making compensation adjustments.

(4) Adjust C4101 for the best flat top waveform.

(5) Set CH 1 VOLTS/DIV to 50 m and readjust the generator for a 5-division display.

(6) Adjust C4108 for the best flat top, and C4107 for the best front corner on the waveform. Alternately readjust both capacitors for the best overall waveform response.

(7) Set CH 1 VOLTS/DIV to .5, remove the 10X attenuator, and readjust the generator for a 5-division display.

(8) Adjust C4105 for the best flat top, and C4104 for the best front corner on the waveform. Alternately readjust both capacitors for the best overall waveform response.

(9) Continue to the next procedure.

I. High-Frequency Conpensation (Figure 5-19).

(1) Move the output of the square wave generator to its positive going, FAST RISE OUTPUT.

(2) Set CH 2 VOLTS/DIV to 5 m and VERT MODE to CH 2.

(3) Disconnect the square wave generator output from the CH 1 input, remove the input RC normalizer, install the 10X attenuator between the BNC cable and termination, and connect the generator output to CH 2. Set the generator output to 1 kilohertz and adjust for a 5-division display. During adjustments, maintain a 5-division display.

(4) Adjust R4406 for the best flat top on the waveform.

(5) Set TIME/DIV to 20 μs.

(6) Set generator to 10 kilohertz and adjust for a 5-division display.

(7) Adjust C4405 for the best flat top on the waveform.

(8) Set TIME/DIV to .1 μs.

(9) Set generator for 100 kilohertz and adjust for a 5-division display.

(10) Push in X10 MAG (on).

(11) Adjust CH 2 vertical POSITION so top of waveform is on the center horizontal graticule line.

(12) Adjust C4271, R4410, C4410, C4342, C4412, C4447, and R4447 for the best front corner of the waveform. Total aberrations should not exceed ±3% or 3% peak-to-peak (+0.15 division, −0.15 division, or 0.15 division peak-to-peak).

(13) Set CH 2 VOLTS/DIV to 20 m.

(14) Adjust generator for a 5-division display.

(15) Adjust R4267 for the best front corner of the waveform.

(15.1) Set CH 2 VOLTS/DIV to 50 m.

(15.2) Adjust generator for a 5-division display.

(15.3) Adjust R4208 for the best flat top on the front corner of the waveform.

(16) Set CH 2 VOLTS/DIV to .5.

(17) Remove the 10X attenautor from the generator input to CH 2.

(18) Adjust R4206 for the best front corner of the waveform.

(19) Reinstall the 10X attenuator in the CH 2 input. Set VOLTS/DIV to 5 m and TIME/DIV to 0.5 μs. Adjust for a 5-division display. Check rise time. If it is greater than 3.5 nanoseconds repeat steps (2) through (18).

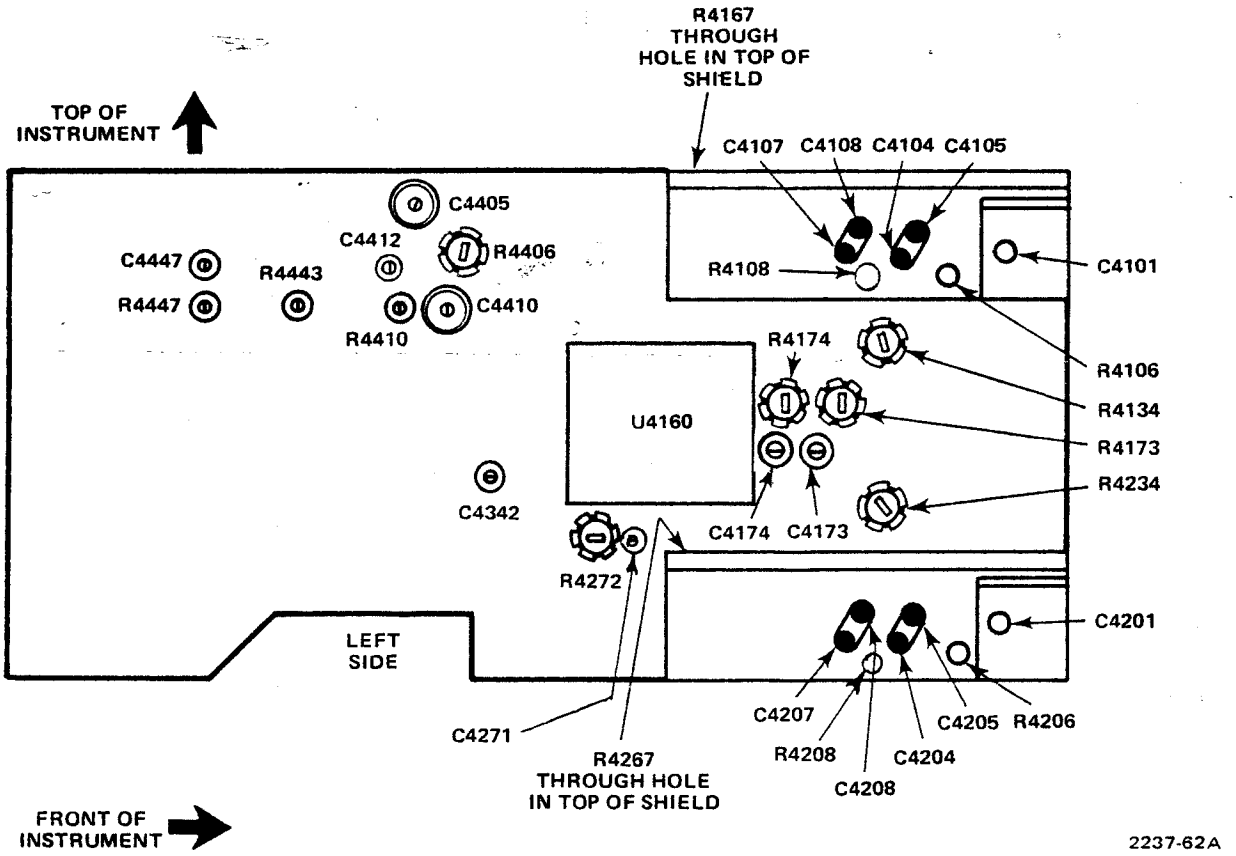

Figure 5-19. Vertical adjustment locations.

j. Channel 2 Low Frequency Compensation (Figure 5-19).

(1) Set square wave generator (same as calibration generator, if using PG 506) for a 1 kilohertz, HIGH AMPL OUTPUT.

(2) Disconnect the square wave generator output from CH 2 and reconnect it to CH 2 through a 10X attenuator, 50 ohm termination, and an input RC normalizer. Set the generator for a 5-division display. During adjustment, set the generator output as necessary to maintain a 5-division display.

NOTE

Use a low capacitance tuning tool when making compensation adjustments.

(3) Adjust C4201 for the best flat top waveform.

(4) Set CH 2 VOLTS/DIV to 50 m and reset the generator output level for a 5-division display.

(5) Adjust C4208 for the best flat top, and C4207 for the best front corner on the waveform. Alternately readjust both capacitors for the best overall waveform response.

(6) Set CH 2 VOLTS/DIV to .5, remove the 10X attenuator, and reset the generator output level for a 5-division display.

(7) Adjust C4205 for the best flat top, and C4204 for the best front corner on the waveform. Alternately readjust both capacitors for the best overall waveform response.

(8) Continue to the next procedure.

k. Channel 1 Low Frequency Compensation (Figure 5-19).

(1) Set VERT MODE to CH 1.

(2) Remove the square wave generator output from CH 2 input and reconnect it to CH 1 through a 50 ohm BNC cable, 10X attenuator, 50 ohm termination, and an input RC normalizer.

(7) Set A AND B TIME/DIV, its associated VAR control, and horizontal POSITION for exactly one time marker per division.

(8) Adjust Y AXIS, R573 to align the center time marker with the center vertical graticule line.

INTERACTION NOTE

This adjustment may affect the TRACE ROTATION adjustment. Position the display baseline to the center horizontal graticule line and recheck display alignment. If TRACE ROTATION needs readjustment, alternate between it and the Y-AXIS adjustment until no further adjustment is needed.

(9) Continue to the next procedure.

f. Geometry (Figure 5-18).

(1) Readjust TIME/DIV VAR and horizontal POSITION for one time marker per division.

(2) Adjust GEOM, R572 for minimum bowing of time markers.

INTERACTION NOTE

This adjustment may affect Y-Axis Alignment and TRACE ROTATION. Repeat Y-Axis Alignment, TRACE ROTATION, and Geometry adjustments for optimum overall alignment.

(3) Reset TIME/DIV VAR fully clockwise in its detent.

(4) Disconnect the time mark generator.

g. Calibrator (Figure 5-18).

(1) Connect a digital voltmeter to the CALIBRATOR output.

(2) Connect a shorting jumper between TP376 and TP386 (a small alligator clip works nicely).

(3) Adjust CAL AMPL, R386 for a 1.00 volt dc reading.

(4) Disconnect the voltmeter.

(5) Remove the shorting jumper from TP376 and TP386.

h. Dc Balance (Figure 5-19).

(1) Set CH 1 and CH 2 VOLTS/DIV to 5 m (1X window) and A AND B TIME/DIV to .2 ms.

(2) Adjust CH 1 vertical POSITION to vertically center the trace.

(3) Adjust R4134 for no trace shift when switching CH 1 VOLTS/DIV between 5 m and 10 m.

(4) Set VERT MODE to CH 2.

(5) Adjust CH 2 vertical POSITION to vertically center the trace.

(6) Adjust R4234 for no trace shift when switching CH 2 VOLTS/DIV between 5 m and 10 m.

i. Vertical Gain (Figure 5-19).

(1) Set CH 1 and CH 2 VOLTS/DIV to 5 m (1X window) and VERT MODE to CH 1.

(2) Connect a calibration generator (select STD OUTPUT) to CH 1 input through an unterminated 50 ohm BNC cable. Set the generator for a 20 millivolt output.

(3) Adjust R4443 for a 4-division display.

(4) Set VERT MODE to CH 2.

(5) Move the calibration generator output from CH 1 input to CH 2 input.

(6) Adjust R4272 for a 4-division display.

(7) Continue to the next procedure.

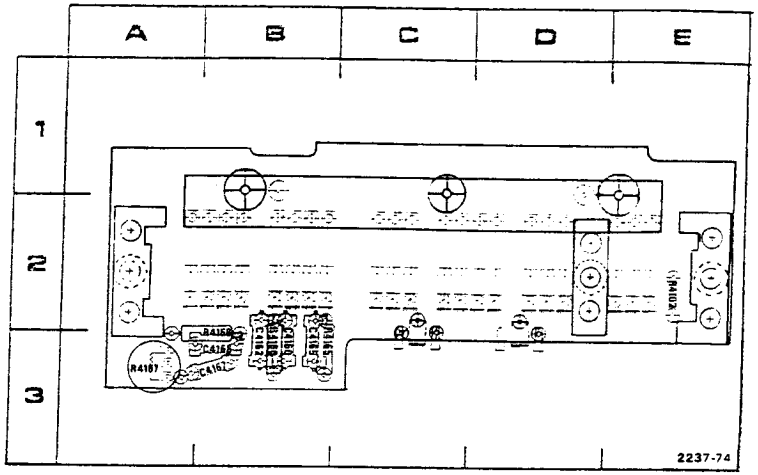

Figure 6-3. A1 Cam Switching board (top) component locations.

CKT NO	GRID LOC	CKT NO	GRID LOC	CKT NO	GRID LOC	CKT NO	GRID LOC	CKT NO	GRID LOC
C4160	3B	C4165	3B	C4168	3B	R4160	3B	R4167	3A
C4162	3B	C4167	3B	R4102	2E	R4165	3B	R4168	3B

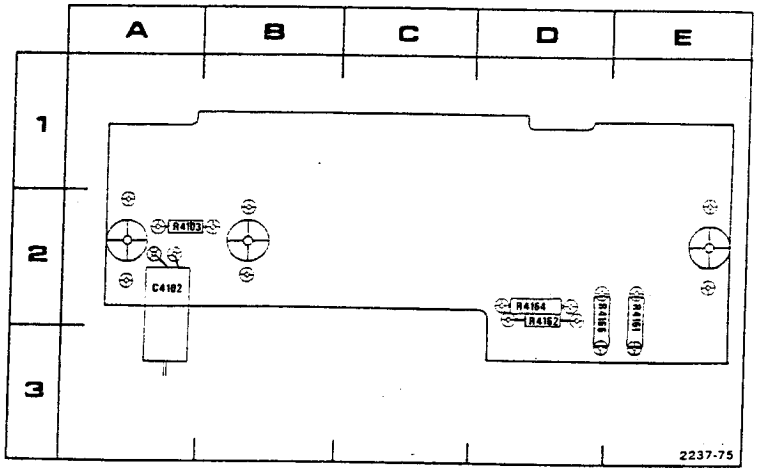

Figure 6-4. A1 Cam Switching board (bottom) component locations.

CKT NO	GRID LOC	CKT NO	GRID LOC	CKT NO	GRID LOC
C4102	2A	R4161	2E	R4164	2D
R4103	2A	R4162	2D	R4166	2D

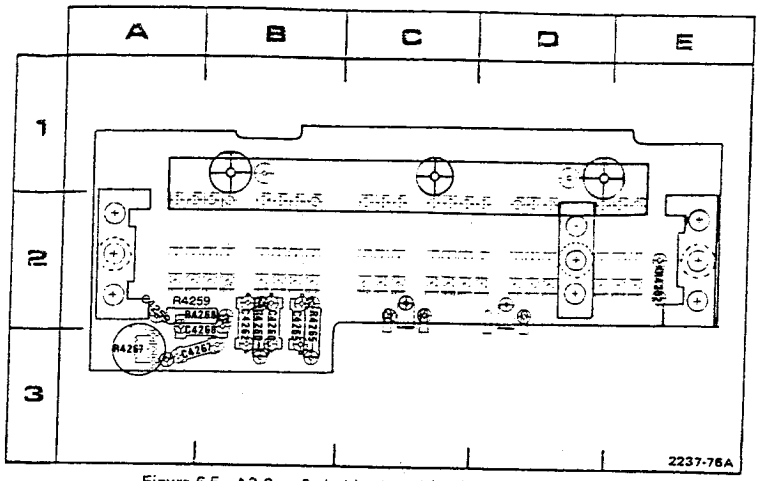

Figure 6-5. A3 Cam Switching board (top) component locations.

CKT NO	GRID LOC	CKT NO	GRID LOC	CKT NO	GRID LOC	CKT NO	GRID LOC	CKT NO	GRID LOC
C4259	2A	C4265	2B	C4268	2A	R4260	2B	R4267	3A
C4260	2B	C4267	3A	R4202	2E	R4265	2B	R4268	2A
C4262	2B			R4259	2A				

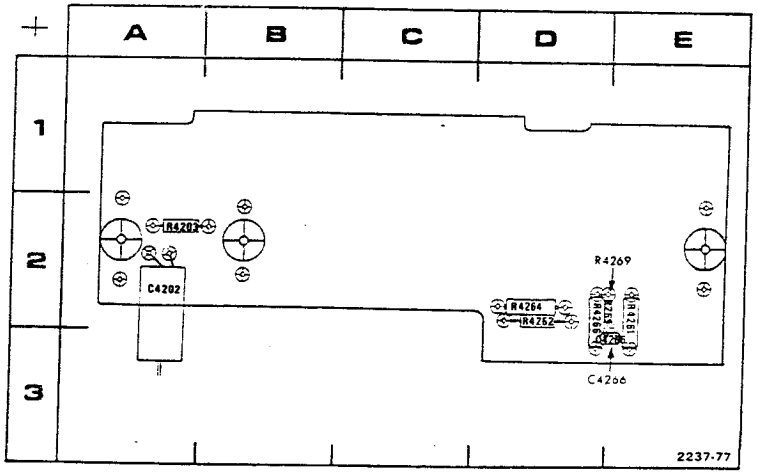

Figure 6-6. A3 Cam Switching board (bottom) component locations.

CKT NO	GRID LOC	CKT NO	GRID LOC	CKT NO	GRID LOC	CKT NO	GRID LOC
C4202	2A	R4203	2A	R4262	2D	R4266	2D
C4266	3E	R4261	2E	R4264	2D	R4269	2E

GRID LOC	CKT NO	GRID LOC	CKT NO	GRID LOC
3I	R4324	4B	R4416	2D
3H	R4327	4C	R4418	3E
3I	R4328	4A	R4419	3D
2F	R4332	5B	R4421	1D
4F	R4333	5B	R4423	1D
2I	R4334	5B	R4425	1D
	R4335	5B	R4427	1D
	R4336	5A	R4428	1C
4H	R4337	4C	R4429	1C
4I	R4338	5C	R4431	2D
4H	R4340	2E	R4433	2D
4H	R4341	3F	R4437	2C
4I	R4343	3E	R4441	2C
4H	R4345	3F	R4443	2C
4H	R4349	4E	R4446	1B
4J	R4351	3F	R4447	2B
4H	R4355	3F	R4448	2C
4H	R4356	3F	R4451	2C
4H	R4359	4E	R4453	2C
4H	R4361	4E	R4456	1C
4F	R4362	3E	R4457	1B
5F	R4363	4E	R4458	2C
4G	R4364	4D	R4459	2C
4G	R4365	3D	R4461	1B
4F	R4366	3D	R4463	1A
4F	R4371	3E	R4466	1A
1F	R4372	3E	R4471	2B
4E	R4373	3E	R4473	2B
4F	R4375	3D	R4474	2A
4F	R4376	4E	R4475	2A
4E	R4382	2E	R4476	2A
5E	R4383	2E		
5F	R4384	2E	RT4119	2D
4E	R4385	2F	RT4116	2D
4D	R4386	2F		
4D	R4400†		S4240	3I
5E	R4401	2D	S4330	3K
3E	R4403	2D	S4380	3B
4D	R4404	1D	S4378	3C
4I	R4405	2E		
4A	R4406	1E	U4160	3G
4A	R4408	1E		
4B	R4409	1E		
4C	R4410	2D		
4A	R4411	2E		
4A	R4413	2D		
3A	R4414	2D		

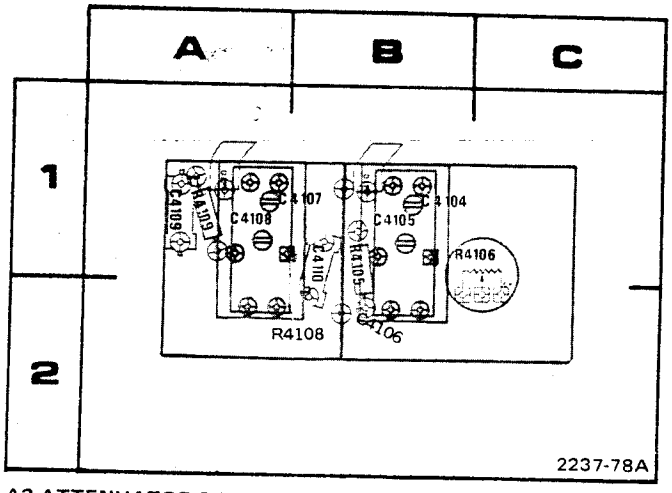

A2 ATTENUATOR BOARD.

CKT NO	GRID LOC	CKT NO	GRID LOC
C4104	1B	C4110	1B
C4105	1B		
C4106	2B	R4105	1B
C4107	1B	R4106	1B
C4108	1A	R4108	2B
C4109	1A	R4109	1A

FRONT

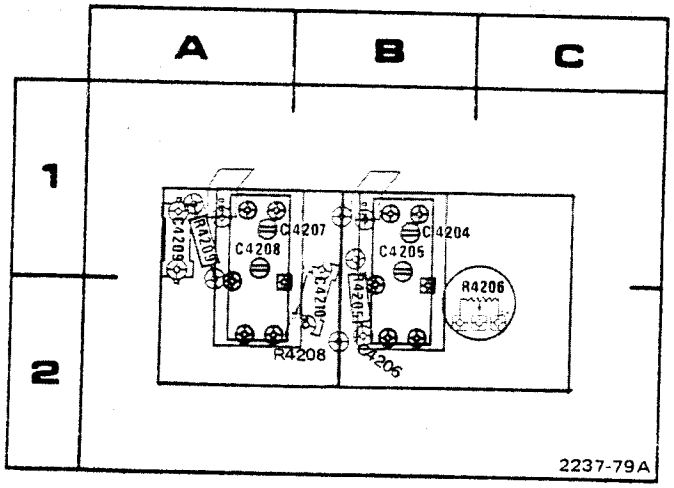

A4 ATTENUATOR BOARD

CKT NO	GRID LOC	CKT NO	GRID LOC	CKT NO	GRID LOC	CKT NO	GRID LOC
C4204	1B	C4207	1B	C4210	2B	R4206	1C
C4205	1B	C4208	1A			R4208	2B
C4206	2B	C4209	1A	R4205	2B	R4209	1A

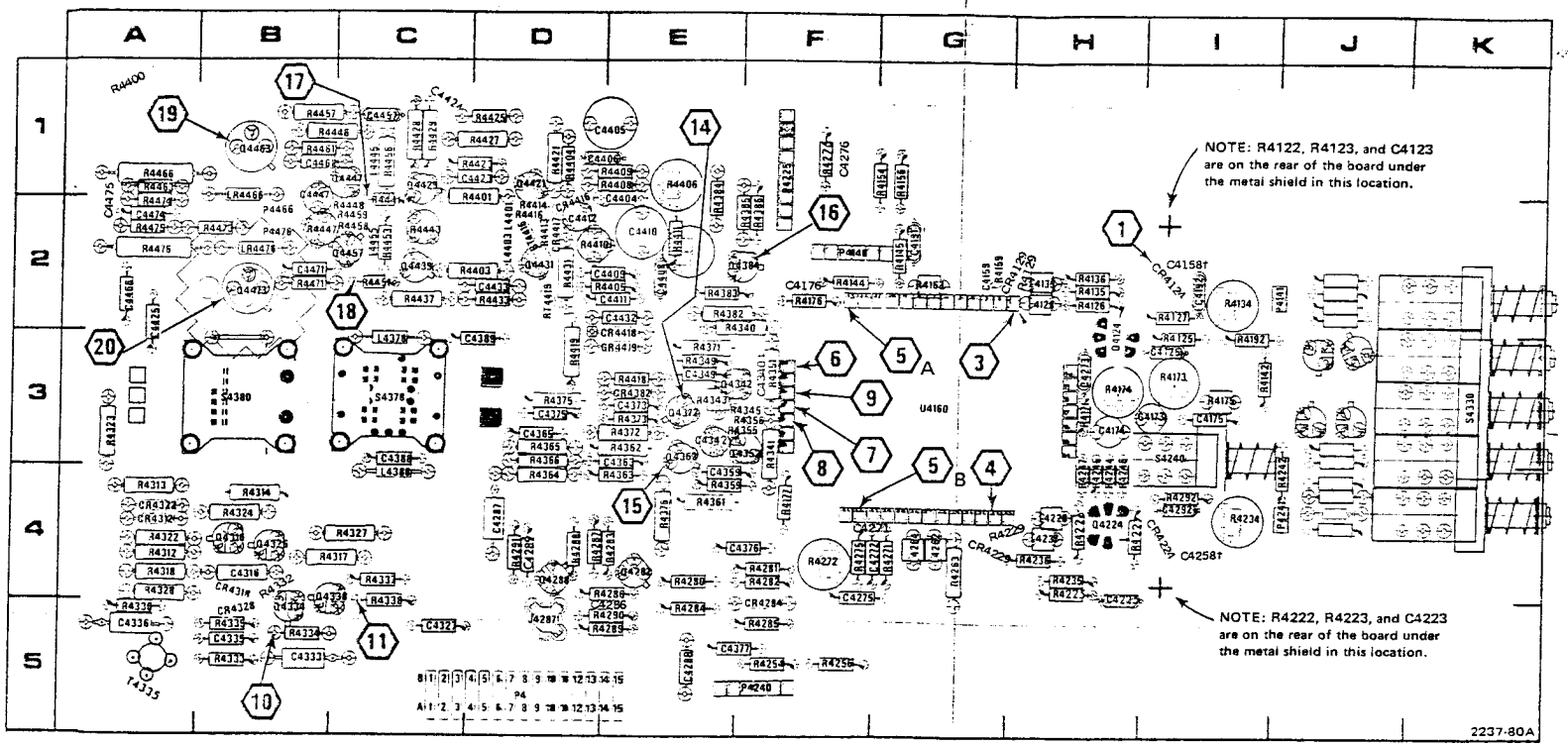

A5 VERTICAL BOARD.

CKT NO	GRID LOC	CKT NO	GRID LOC	CKT NO	GRID LOC	CKT NO	GRID LOC	C N
C4123†		C4423	1D	P4	5D	R4173	3I	R
C4125	3I	C4424	1C	P4140	2F	R4174	3H	R
C4158†‡*		C4425	2A	P4141	1J	R4175	3I	R
C4159	2G	C4432	2E	P4225	1F	R4176	2F	R
C4173	3I	C4433	2D	P4240	5F	R4177	4F	R
C4174	3H	C4445§		P4466	2B	R4192	2I	R
C4175	3I	C4447	1B	P4476	2B	R4222†		R
C4176*	2F	C4449	3E			R4223†		R
C4191	2G	C4455§		Q4124	2H	R4225	4H	R
C4192	2I	C4457	1C	Q4224	4H	R4226	4I	R
C4223†		C4461	1B	Q4282	4E	R4227	4H	R
C4225	4H	C4466	2A	Q4288	4D	R4229	4H	R
C4258†‡*		C4471	2B	Q4316	4B	R4234	4I	R
C4271*	4G	C4474	2A	Q4326	4B	R4235	4H	R
C4272	5G	C4475	2A	Q4334	5B	R4236	4H	R
C4273	3H			Q4338	5C	R4242	4J	R
C4275	5F	CR4124	2I	Q4342	3F	R4244	4H	R
C4276*	1F	CR4129	2H	Q4352	3F	R4245	4H	R
C4286*	5E	CR4224	2I	Q4362	3E	R4246	4H	R
C4287	4D	CR4229	4G	Q4372	3E	R4247	4H	R
C4288	5E	CR4284	5F	Q4384	2F	R4254	4F	R
C4289	5E	CR4312	4A	Q4421	1D	R4256	5F	R
C4292	4I	CR4318	4B	Q4429	1C	R4263	4G	R
C4316	4B	CR4322	4A	Q4431	2D	R4271	4G	R
C4327	5C	CR4328	5B	Q4439	2C	R4272	4F	R
C4333	5B	CR4382	3E	Q4447	1C	R4275	4F	R
C4335	5B	CR4416	2D	Q4457	2C	R4276	1F	R
C4336	5A	CR4417	2D	Q4463	1B	R4280	4E	R
C4340†*		CR4418	3E	Q4473	2B	R4281	4F	R
C4342	3E	CR4419	3E			R4282	4F	R
C4359	4E			R4122†		R4283	4E	R
C4363	3E	J4287	5D	R4123†		R4284	5E	R
C4365	3D			R4125	2I	R4285	5F	R
C4373	3E	L4128	2H	R4126	2H	R4286	4E	R
C4375	3D	L4135	2H	R4127	2I	R4287	4D	R
C4376	4F	L4228	4H	R4129	2H	R4288	4D	R
C4377	5F	L4237	4H	R4134	2I	R4289	5E	R
C4388	3C	L4262	4G	R4135	2H	R4290	5E	R
C4389	3D	L4264	4G	R4136	2H	R4291	4D	R
C4404	2E	L4378	3C	R4142	3D	R4292	4I	R
C4405	1E	L4388	4C	R4144	2F	R4312	4A	R
C4406	1D	L4401	2D	R4145	2G	R4313	4A	R
C4408	2E	L4403	2D	R4154	1G	R4314	4B	R
C4409	2E	L4445	1C	R4156	1G	R4317	4C	R
C4410	2E	L4456	1C	R4159	2G	R4318	4A	R
C4411	2E	L4466	1B	R4163	2G	R4322	4A	R
C4412	2D	L4476	2B	R4171	3H	R4323	3A	R

†On back of board

‡Selected: Added as necessary.

*See Parts List for serial number ranges.

§Integral part of etched circuit board.

For Service Manuals Contact
MAURITRON TECHNICAL SERVICES
8 Cherry Tree Rd, Chinnor
Oxon OX9 4QY
Tel:- 01844-351694 Fax:- 01844-352554
Email:- enquiries@mauritron.co.uk

Figure 6-7. A5 Vertical, A2 Attenuator, & A4 Attenuator board component locations.

VOLTAGE and WAVEFORM CONDITIONS

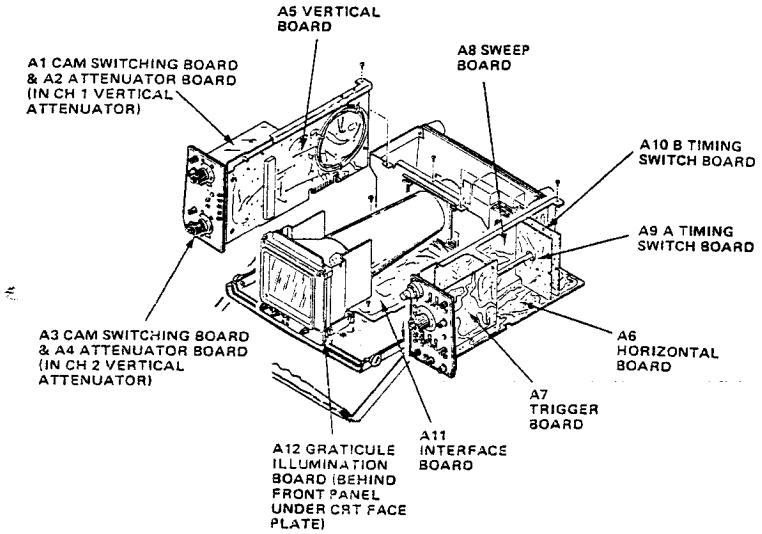

For Service Manuals Contact
MAURITRON TECHNICAL SERVICES
8 Cherry Tree Rd, Chinnor
Oxon OX9 4QY
Tel: 01844-351694 Fax: 01844-352554
Email: enquiries@mauritron.co.uk

WAVEFORM AND VOLTAGE TEST CONDITIONS.

a. Waveform Conditions. The following test setup is used for all waveforms, except as noted. This uniform setup simplifies troubleshooting. The test oscilloscope trigger setup allows time comparison (horizontally) between the waveforms. Use an AN/USM-425(V)1, Tektronix 465M, or equivalent for waveforms.

(1) Instrument Setup.

(a) Connect a P6104 Probe (10X) to CH 1 input and the probe tip to the CALIBRATOR.

(b) Set the instrument controls as follows:

VOLTS/DIV (both)	.2
AC-GND-DC (both)	DC
VERT MODE	CH 1
HORIZ DISPLAY	MIXED
SOURCE (both)	CH 1
SLOPE (both)	OUT: +
A TIME/DIV	.2 ms
B TIME/DIV	50 μs
LEVEL (both)	For a stable mixed display

(2) Test Oscilloscope Setup.

(a) Connect a 50 ohm unterminated BNC cable between the A EXT Trigger input of the test oscilloscope and the +A GATE of the oscilloscope under test.

(b) Set the test oscilloscope controls as follows:

A COUPLING	DC
A SLOPE	OUT: +
A SOURCE	EXT ÷ 10
VERT MODE	CH 1
CH 1 AC-GND-DC	DC
A LEVEL	Adjust so TRIG READY indicator is lit. Push TRIG VIEW to verify triggering on the positive slope.

b. Voltage Conditions. The voltages were taken between the indicated test point and chassis ground using a Tektronix DM 501A digital multimeter. Any change from the following setup may change some of the indicated voltages. Set controls as follows (where controls are duplicated, set both controls the same):

VOLTS/DIV	5 m
AC-GND-DC	GND
POSITION (Vertical)	Midrange
VERT MODE	CH 2
DELAY TIME POS	5.00
HORIZ DISPLAY	A
TIME/DIV	1 ms
POSITION (Horizontal)	Midrange
INTEN	Fully counterclockwise
FOCUS	Fully counterclockwise
SCALE ILLUM	Midrange
TRIG MODE	NORM
COUPLING	AC
SOURCE	CH 1
SLOPE	+
LEVEL	Midrange

NOTE

These settings place the instrument in a quiscent operating state for making dc voltage measurements.

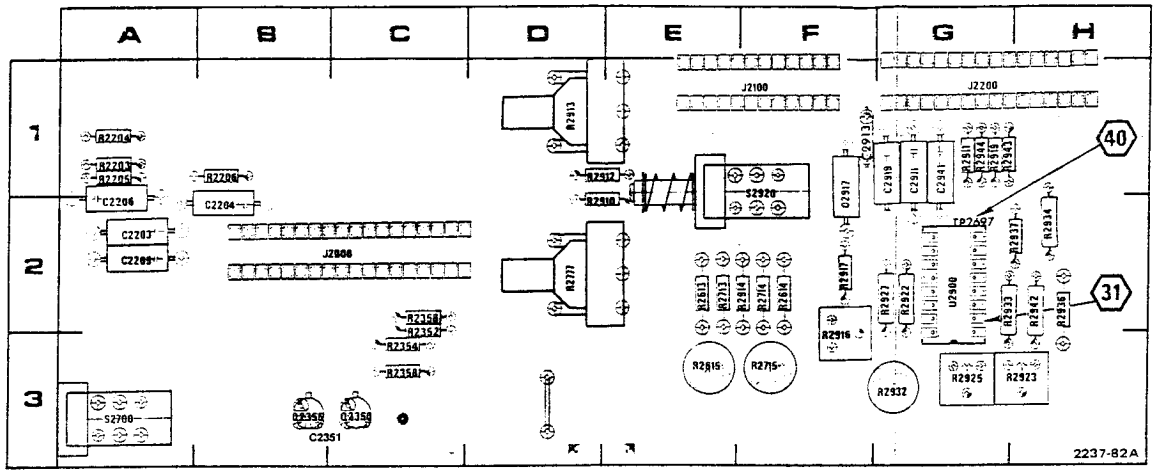

CKT NO	GRID LOC	CKT NO	GRID LOC	CKT NO	GRID LOC	CKT NO	GRID LOC	CKT NO	GRID LOC	CKT NO	GRID LOC
C2203	2A	J2000	2C	R2205	1A	R2715	3F	R2922	2G	R2943	1G
C2204	2B	J2100	1F	R2206	1B	R2777	2D	R2923	3H	R2944	1G
C2205	2A	J2200	1G	R2352	3C	R2910	2D	R2925	3G		
C2206	2A			R2356	2C	R2911	1G	R2927	2G	S2700	3A
C2351	3B	Q2350	3C	R2358	3C	R2912	1D	R2932	3G	S2920	1F
C2911	1G	Q2356	3B	R2613	2E	R2913	1D	R2933	2G		
C2913	1F			R2614	2F	R2914	2F	R2934	2H	U2900	2G
C2917	1F	R2201§		R2615	3E	R2916	3F	R2936	2H		
C2919	1G	R2203	1A	R2713	2E	R2917	2F	R2937	2H		
C2941	1G	R2204	1A	R2714	2F	R2919	1G	R2942	2H		

§ Connected from A6 to bnc connector

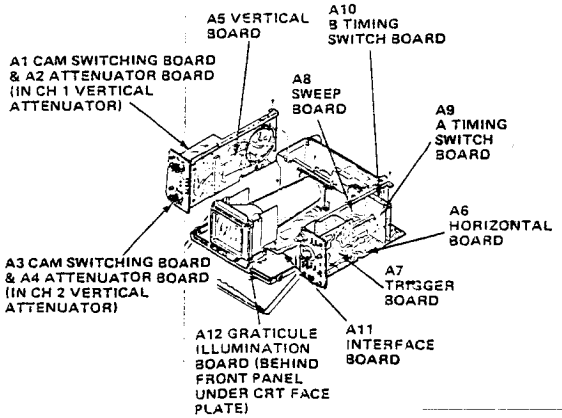

Figure 6-8. A6 Horizontal board component locations.

Refer to Waveform and Voltage Test Conditions.

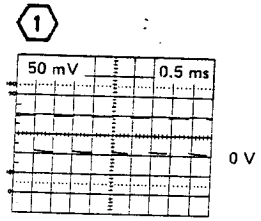

2237-114

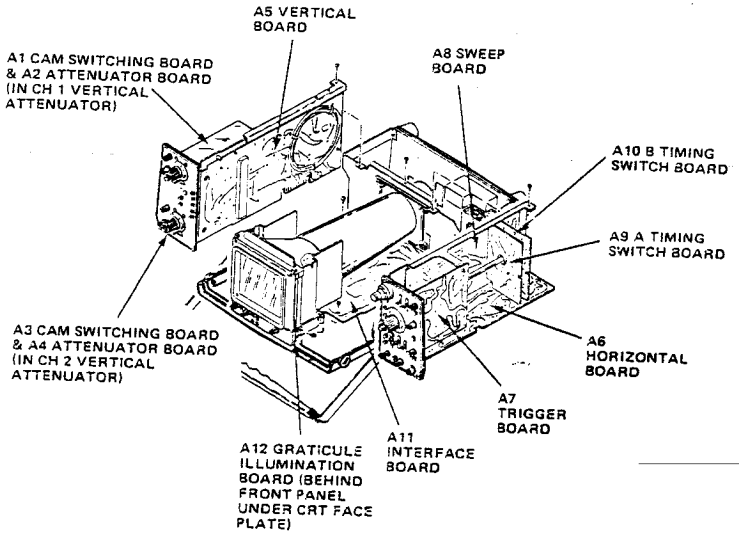

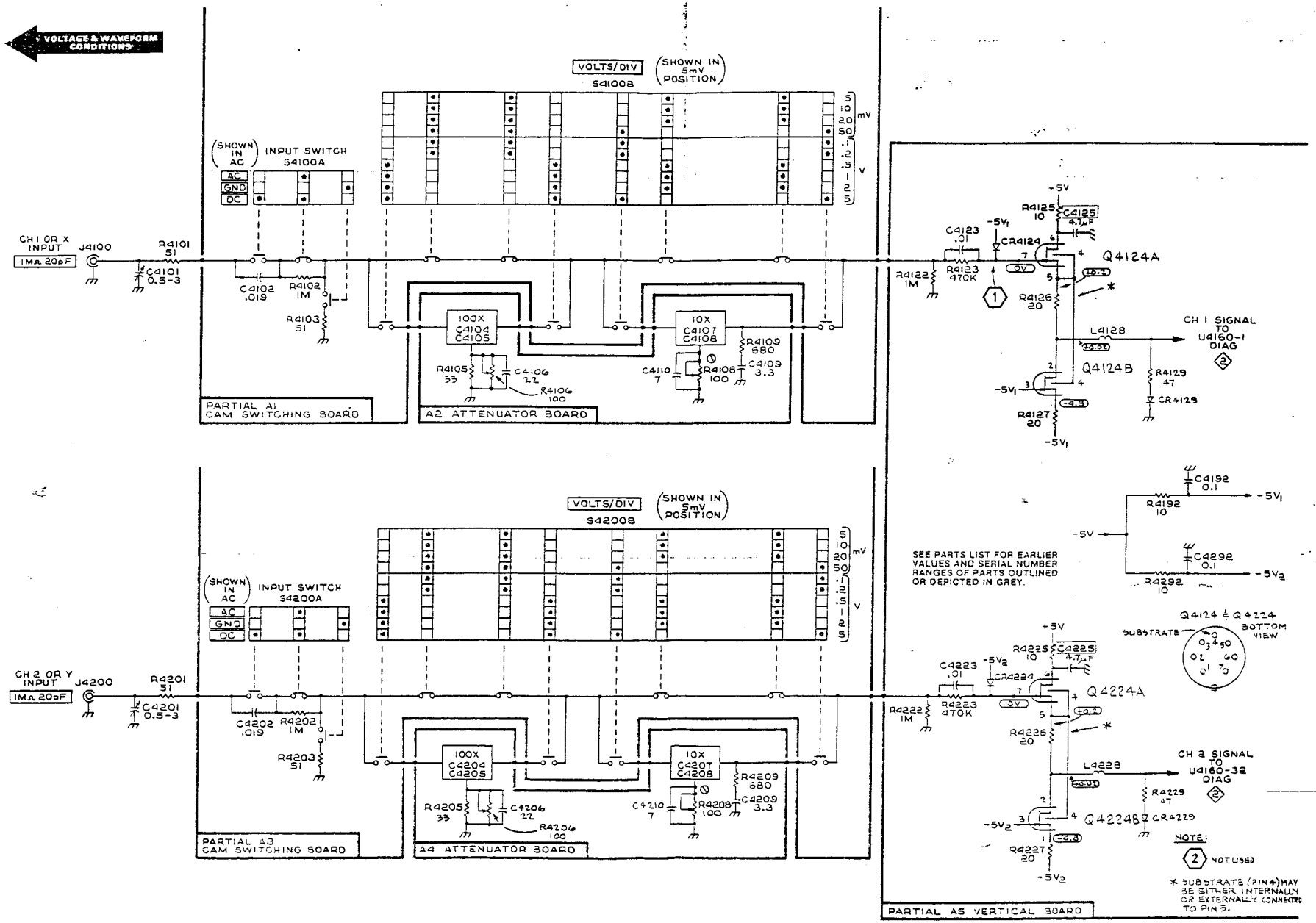
VOLTAGE & WAVEFORM CONDITIONS
VOLTS/DIV
S4100B
(SHOWN IN 5mV POSITION)
5 10 20 50 mV
.1 .2 .5 1 2 5 V
(SHOWN IN AC)
INPUT SWITCH
S4100A
AC
GND
DC
CH 1 OR X INPUT
1MΩ 20pF
J4100
R4101 51
C4101 0.5-3
C4102 .019
R4102 1M
R4103 51
100X
C4104
C4105
10X
C4107
C4108
R4105 33
C4106 22
R4106 100
C4110 7
R4108 100
R4109 680
C4109 3.3
PARTIAL A1 CAM SWITCHING BOARD
A2 ATTENUATOR BOARD
+5V
R4125 10
C4125 4.7μF
C4123 .01
-5V1
CR4124
R4122 1M
R4123 470K
0V
Q4124A
R4126 20
L4128
CH 1 SIGNAL TO U4160-1 DIAG
Q4124B
R4129 47
CR4129
R4127 20
-5V1
C4192 0.1
R4192 10
-5V
C4292 0.1
R4292 10
-5V2
SEE PARTS LIST FOR EARLIER VALUES AND SERIAL NUMBER RANGES OF PARTS OUTLINED OR DEPICTED IN GREY.
Q4124 & Q4224 BOTTOM VIEW
SUBSTRATE
VOLTS/DIV
S4200B
(SHOWN IN 5mV POSITION)
(SHOWN IN AC)
INPUT SWITCH
S4200A
CH 2 OR Y INPUT
1MΩ 20pF
J4200
R4201 51
C4201 0.5-3
C4202 .019
R4202 1M
R4203 51
100X
C4204
C4205
10X
C4207
C4208
R4205 33
C4206 22
R4206 100
C4210 7
R4208 100
R4209 680
C4209 3.3
PARTIAL A3 CAM SWITCHING BOARD
A4 ATTENUATOR BOARD
R4225 10
C4225 4.7μF
C4223 .01
-5V2
CR4224
R4222 1M
R4223 470K
Q4224A
R4226 20
L4228
CH 2 SIGNAL TO U4160-32 DIAG
R4229 47
Q4224B
CR4229
R4227 20
-5V2
NOTE:
2 NOT USED
* SUBSTRATE (PIN 4) MAY BE EITHER INTERNALLY OR EXTERNALLY CONNECTED TO PIN 5.
PARTIAL A5 VERTICAL BOARD

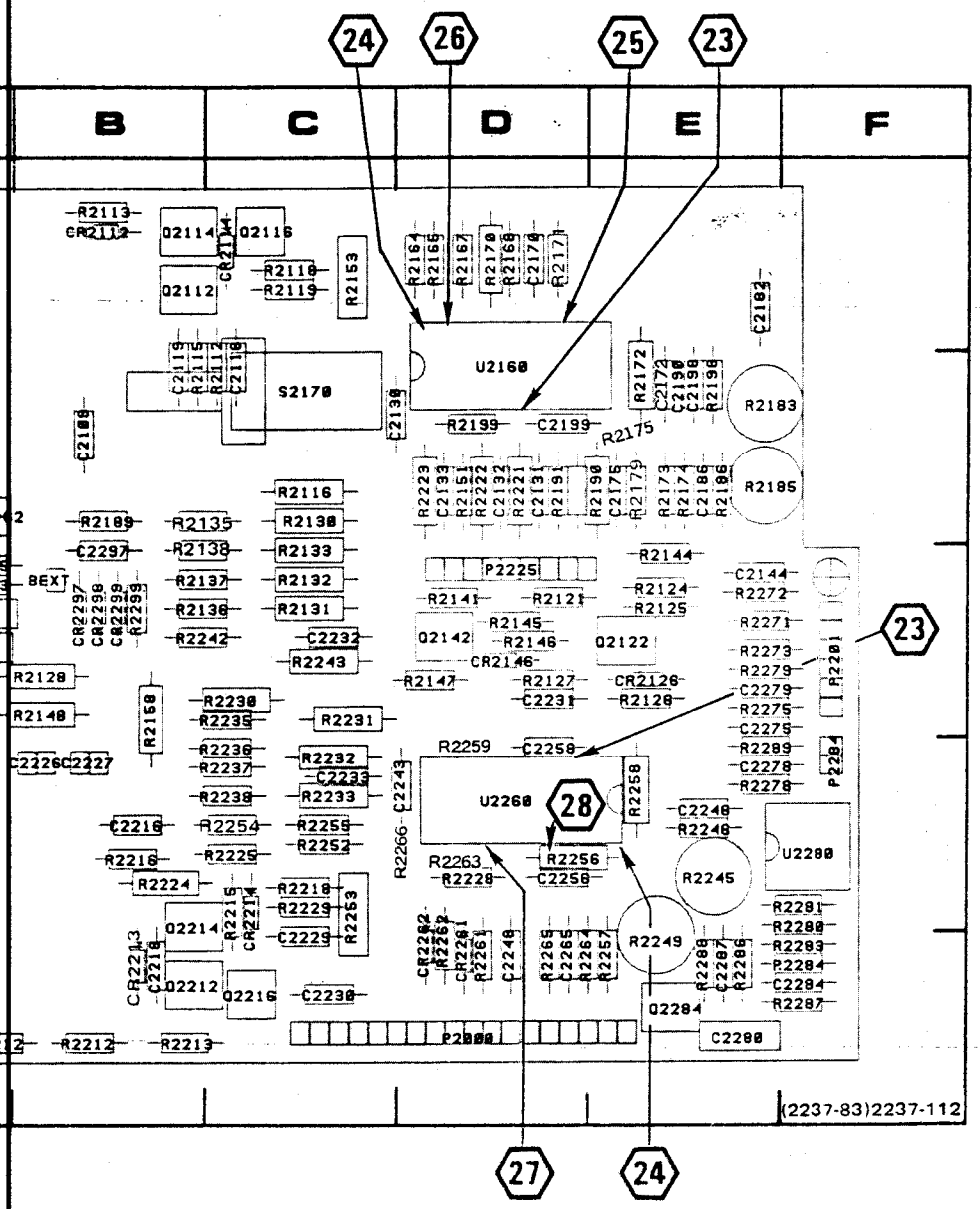

Figure 6-10. A7 Trigger board (below SN B021600) component locations.

	GRID LOC	CKT NO	GRID LOC	CKT NO	GRID LOC	CKT NO	GRID LOC	CKT NO	GRID LOC	CKT NO	GRID LOC	CKT NO	GRID LOC	CKT NO	GRID LOC	CKT NO	GRID LOC
2297	3B	R2101§		R2131	3C	R2167	1D	R2213	5B	R2238	4C	R2265	5D	S2100	1A		
2298	3B	R2103	3A	R2132	3C	R2168	1D	R2215	4C	R2242	3B	R2266†		S2120	2A		
2299	3B	R2104	3A	R2133	3C	R2170	1D	R2216	4B	R2243	3C	R2271	3E	S2200	4A		
		R2105	3A	R2135	2B	R2171	1D	R2218	4C	R2245	4E	R2272	3E	S2220	5A		
00	5D	R2106	4A	R2136	3B	R2172	2E	R2221	2D	R2246	4E	R2273	3E	S2170	2C		
01	3F	R2112	2C	R2137	3B	R2173	2E	R2222	2D	R2249	5E	R2275	3E				
25	3D	R2113	1B	R2138	3B	R2174	2E	R2223	2D	R2252	4C	R2278	4E	U2160	2D		
84	4F	R2115	2B	R2141	3D	R2175	2E	R2224	4B	R2253	4C	R2279	3E	U2260	4D		
		R2116	2C	R2144	3E	R2179	2E	R2225	4C	R2254	4C	R2280	4F	U2280	4F		
112	1B	R2118	1C	R2145	3D	R2183	2E	R2228	4D	R2255	4C	R2281	4F				
114	1B	R2119	1C	R2146	3D	R2185	2E	R2229	4C	R2256	4D	R2283	5F				
116	1C	R2121	3D	R2147	3D	R2186	2E	R2230	3C	R2257	5E	R2284	5F				
122	3E	R2124	3E	R2148	3B	R2189	2B	R2231	3C	R2258	4E	R2286	5E				
142	3D	R2125	3E	R2151	2D	R2190	2E	R2232	4C	R2259†		R2287	5F				
212	5B	R2126	3E	R2153	1C	R2191	2E	R2233	4C	R2261	5D	R2288	5E				
214	4B	R2127	3D	R2158	3B	R2198	2E	R2235	3C	R2262	5D	R2289	4E				
216	5C	R2128	3B	R2164	1D	R2199	2D	R2236	4C	R2263†		R2299	3B				
284	5E	R2130	2C	R2165	1D	R2212	5B	R2237	4C	R2264	5D						

A7 TRIGGER BD
COMPONENT LOCATIONS

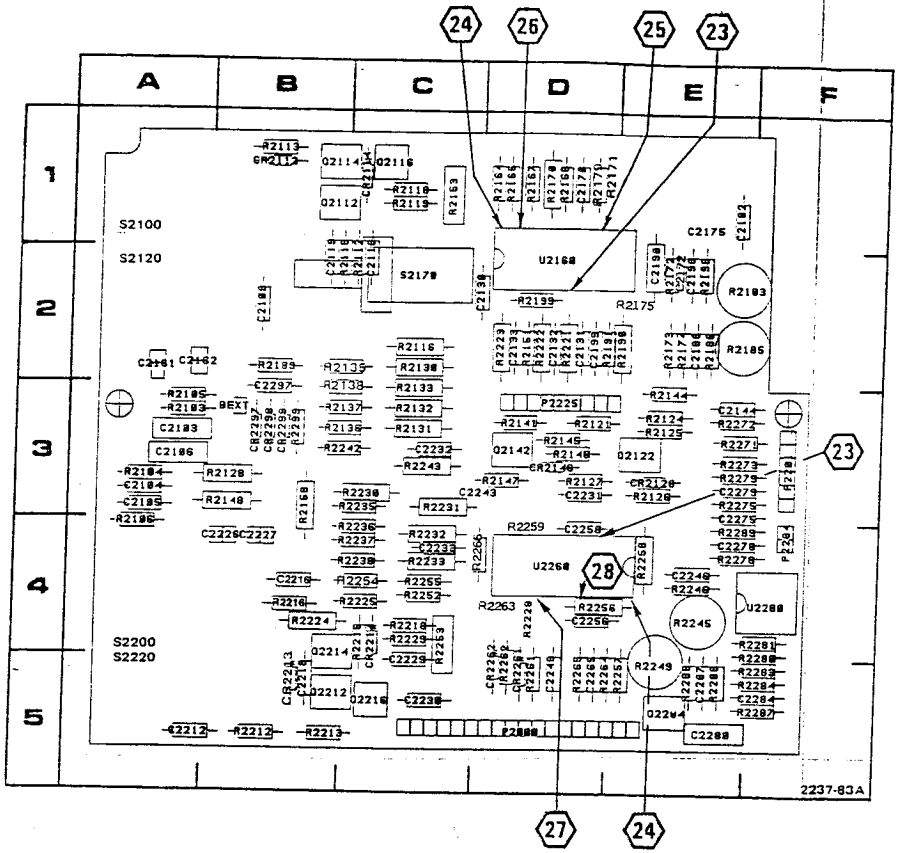

Figure 6-9. A7 Trigger board (SN B021600 & above) component locations.

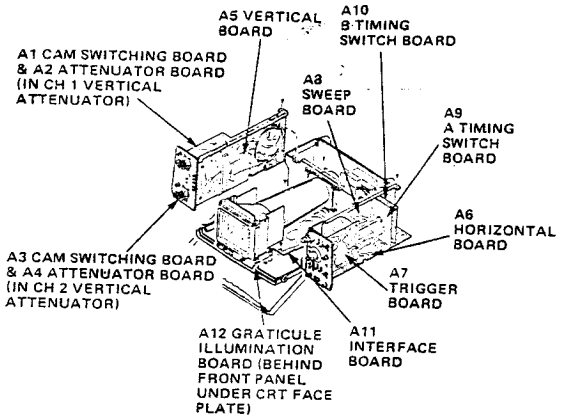

§ Connected from A7 to bnc connector.

†On back of board.

*See Parts List for serial number ranges.

CKT NO	GRID LOC	CKT NO	GRID LOC	CKT NO	GRID LOC	CKT NO	GRID LOC	CKT NO	GRID LOC	CKT NO	GRID LOC	CKT NO	GRID LOC	CKT NO	GRID LOC	CKT NO	GRID LOC	CKT NO	GRID LOC	CKT NO	GRID LOC	CKT NO	GRID LOC	CKT NO	GRID LOC
C2103	3A	C2172	2E	C2232	3C	CR2112	1B	P2284	4F	R2105	3A	R2131	3C	R2158	3B	R2189	2B	R2228	4D	R2252	4C	R2272	3E	S2100	1A
C2104	3A	C2175	1E	C2233	4C	CR2114	1C			R2106	4A	R2132	3C	R2164	1D	R2190	2E	R2229	4C	R2253	4C	R2273	3E	S2120	2A
C2105	3A	C2182	1E	C2243	3D	CR2126	3E	Q2112	1B	R2112	2C	R2133	3C	R2165	1D	R2191	2D	R2230	3C	R2254	4C	R2275	3E	S2200	4A
C2106	3A	C2186	3E	C2246	4E	CR2146	3D	Q2114	1B	R2113	1B	R2135	2B	R2167	1D	R2198	2E	R2231	3C	R2255	4C	R2278	4E	S2220	5A
C2109	2B	C2190	2E	C2248	5D	CR2213	5B	Q2116	1C	R2115	2B	R2136	3B	R2168	1D	R2199	2D	R2232	4C	R2256	4D	R2279	3E	S2170	2C
C2118	2C	C2198	2E	C2256	4D	CR2214	4C	Q2122	3E	R2116	2C	R2137	3B	R2170	1D	R2212	5B	R2233	4C	R2257	5E	R2280	4F		
C2119	2B	C2199	2D	C2258	4D	CR2261	5D	Q2142	3D	R2118	1C	R2138	3B	R2171	1D	R2213	5B	R2235	3C	R2258	4E	R2281	4F	U2160	2D
C2130	2C	C2212	5A	C2265	5D	CR2262	5D	Q2212	5B	R2119	1C	R2141	3D	R2172	2E	R2215	4C	R2236	4C	R2259	4D	R2283	5F	U2260	4D
C2131	2D	C2216*	4B	C2275	3E	CR2297	3B	Q2214	4B	R2121	3D	R2144	3E	R2173	2E	R2216*	4B	R2237	4C	R2261	5D	R2284	5F	U2280	4F
C2132	2D	C2218	5B	C2278	4E	CR2298	3B	Q2216	5C	R2124	3E	R2145	3D	R2174	2E	R2218	4C	R2238	4C	R2262	5D	R2286	5E		
C2133	2D	C2226	4B	C2279	3E	CR2299	3B	Q2284	5E	R2125	3E	R2146	3D	R2175	2E	R2221	2D	R2242	3B	R2263	4D	R2287	5F		
C2144	3E	C2227	4B	C2280	5E					R2126	3E	R2147	3D	R2179	1D	R2222	2D	R2243	3C	R2264	5D	R2288	5E		
C2161	2A	C2229	5C	C2284	5F	P2000	5D	R2101§		R2127	3D	R2148	3B	R2183	2E	R2223	2D	R2245	4E	R2265	5D	R2289	4E		
C2162	2A	C2230	5C	C2287	5E	P2201	3F	R2103	3A	R2128	3B	R2151	2D	R2185	2E	R2224	4B	R2246	4E	R2266	4D	R2299	3B		
C2170	1D	C2231	3D	C2297	3B	P2225	3D	R2104	3A	R2130	2C	R2153	1C	R2186	2E	R2225	4C	R2249	5E	R2271	3E				

CKT NO	GRID LOC	CKT NO	GRID LOC	CKT NO	GRID LOC	CK NO
C2103	3A	C2186	3E	C2258	4D	CF
C2104	3A	C2190	2E	C2265	5D	CF
C2105	3A	C2198	2E	C2275	3E	CF
C2106	3A	C2199	2D	C2278	4E	
C2109	2B	C2212	5A	C2279	3E	P2
C2118	2C	C2216	4B	C2280	5E	P2
C2119	2B	C2218	5B	C2284	5F	P2
C2130	2C	C2226	4B	C2287	5E	P2
C2131	2D	C2227	4B	C2297	3B	
C2132	2D	C2229	5C			Q2
C2133	2D	C2230	5C	CR2112	1B	Q2
C2144	3E	C2231	3D	CR2114	1C	Q2
C2161	2A	C2232	3C	CR2126	3E	Q2
C2162	2A	C2233	4C	CR2146	3D	Q2
C2170	1D	C2243	4D	CR2213	5B	Q2
C2172	2E	C2246	4E	CR2214	4C	Q2
C2175	1E	C2248	5D	CR2261	5D	Q2
C2182	1E	C2256	4D	CR2262	5D	Q2

Refer to Waveform and Voltage Test Conditions.

3 4

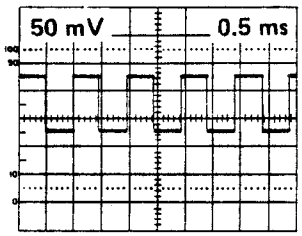

0 V

5 A 5 B

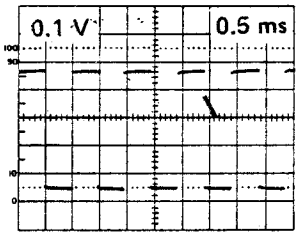

0 V

0 volt point depends on setting of instrument vertical POSITION control.

6

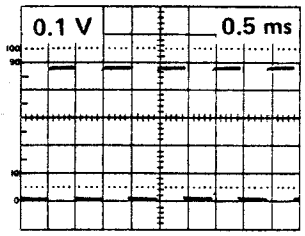

0 V

0 volt point depends on setting of instrument vertical POSITION control.

7

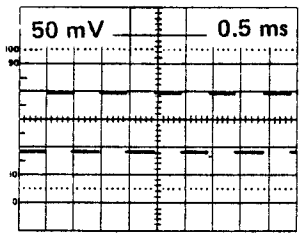

AC Coupled

8

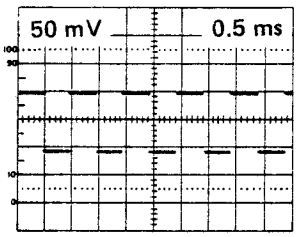

AC Coupled

9 A

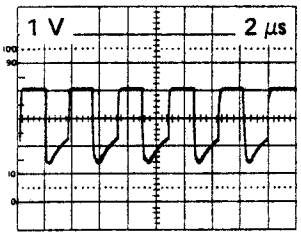

0 V

Instrument VERT MODE to CHOP
Test oscilloscope trigger SOURCE to CH 1

9 B

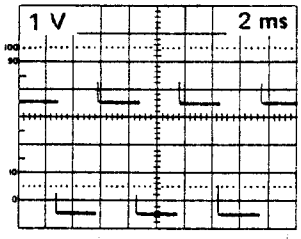

0 V

Instrument VERT MODE to ALT

10

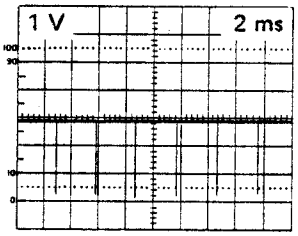

0 V

Instrument VERT MODE to ALT

11

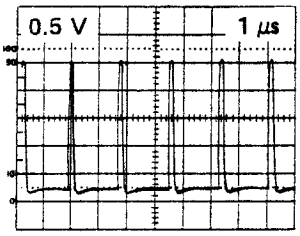

0 V

Instrument VERT MODE to CHOP
Test oscilloscope trigger SOURCE to CH 1

2237-115

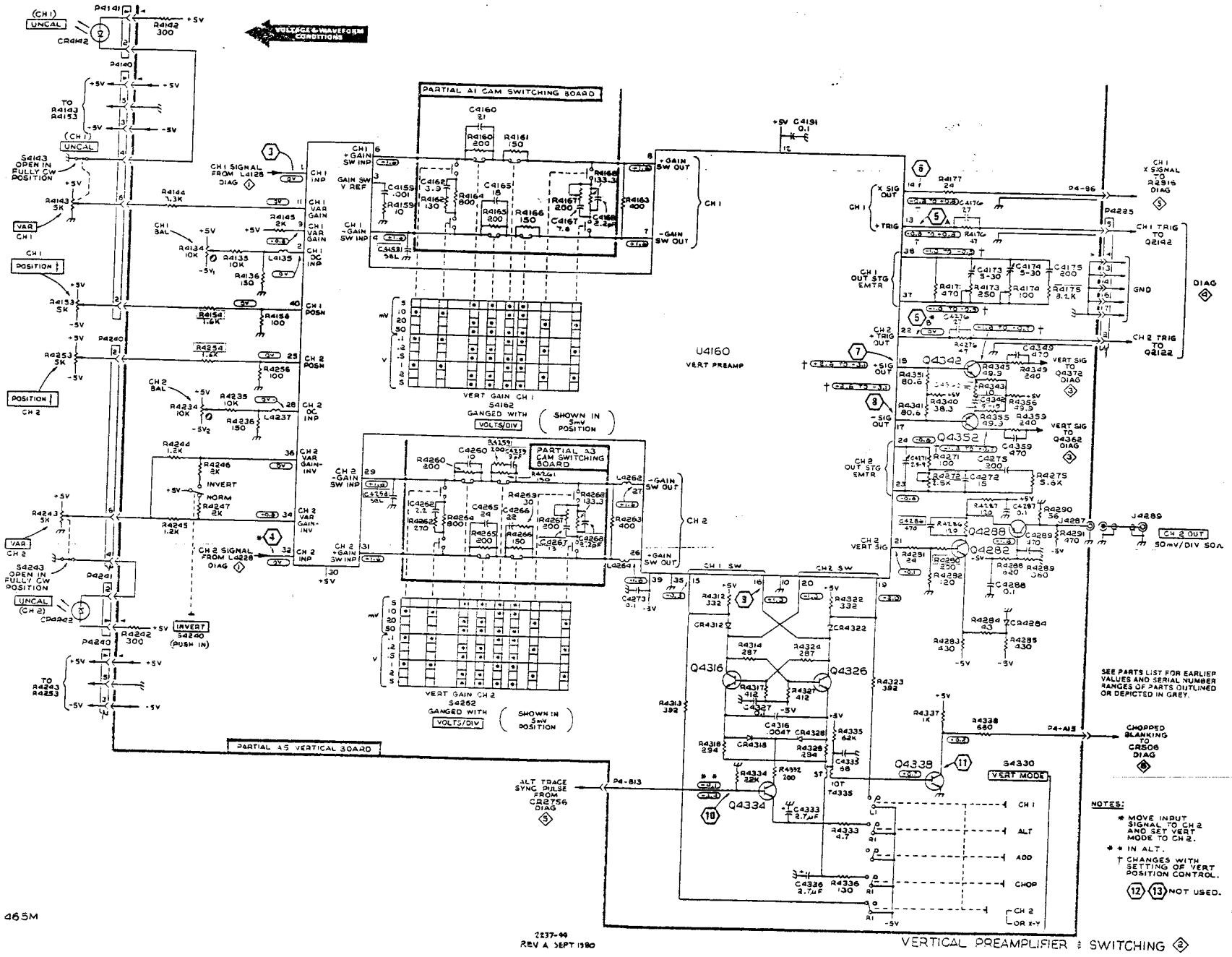

For Service Manuals Contact
MAURITRON TECHNICAL SERVICES
8 Cherry Tree Rd, Chinnor
Oxon OX9 4QY
Tel:- 01844-351694 Fax:- 01844-352554
Email:- enquiries@mauritron.co.uk

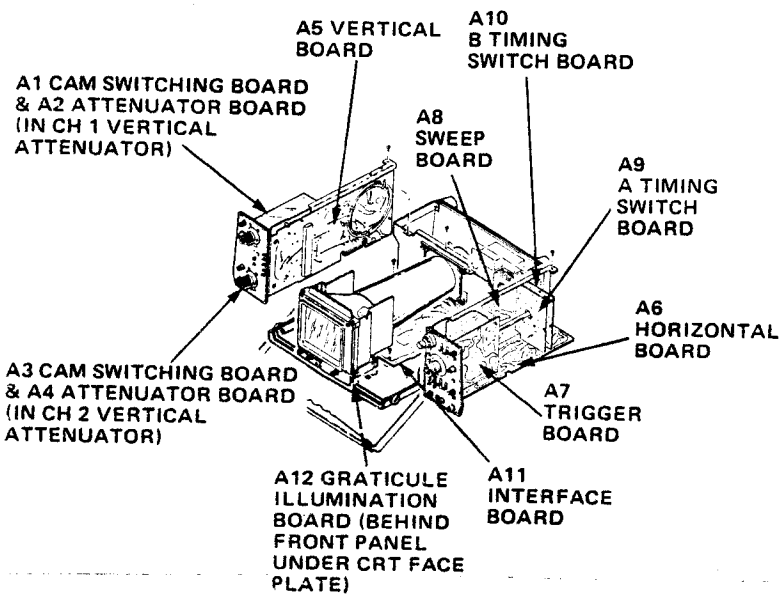

For Service Manuals Contact
MAURITRON TECHNICAL SERVICES
8 Cherry Tree Rd, Chinnor
Oxon OX9 4QY
Tel:- 01844-351694 Fax:- 01844-352554
Email:- enquiries@mauritron.co.uk

A8 SWEEP BD
COMPONENT LOCATIONS

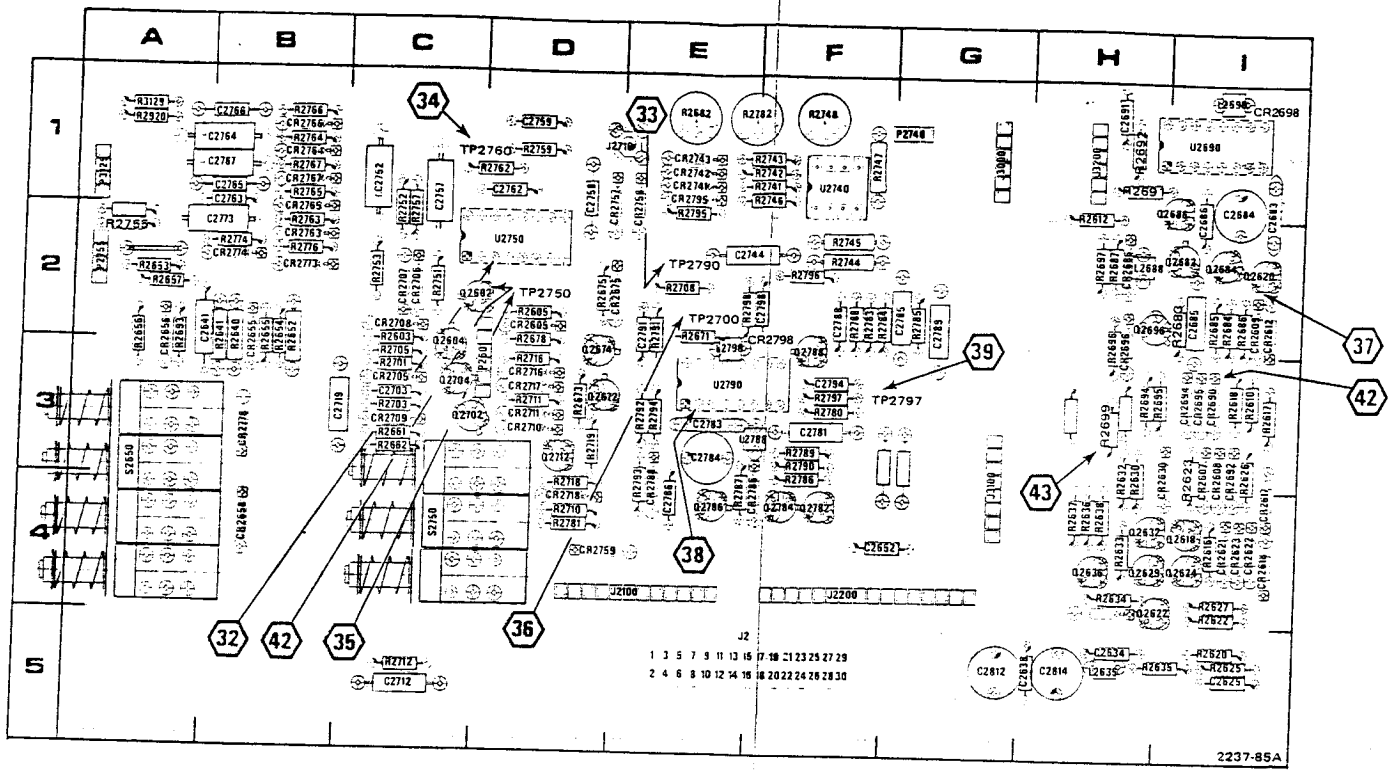

†On back of board.

Figure 6-11. A8 Sweep board component locations.

CKT NO	GRID LOC	CKT NO	GRID LOC	CKT NO	GRID LOC	CKT NO	GRID LOC	CKT NO	GRID LOC	CKT NO	GRID LOC	CKT NO	GRID LOC	CKT NO	GRID LOC	CKT NO	GRID LOC	CKT NO	GRID LOC	CKT NO	GRID LOC	CKT NO	GRID LOC	CKT NO	GRID LOC	CKT NO	GRID LOC	CKT NO	GRID LOC	CKT NO	GRID LOC
C2625	5I	C2758	1D	C2791	2E	CR2655	2B	CR2710	3D	CR2773	2B	L2688	2H	Q2629	4H	R2603	2C	R2634	4H	R2673	3D	R2699	3H	R2746	1F	R2776	2B	R2795	2E	U2740	1F
C2634	5H	C2759	1D	C2794	3F	CR2656	2A	CR2711	3D	CR2774	2B	L2698	1I	Q2632	4H	R2605	2D	R2635	5I	R2675	2D	R2701	3C	R2747	1F	R2780	3F	R2796	2F	U2750	2D
C2638	5H	C2762	1D	C2798	2F	CR2658	3B	CR2716	3D	CR2778	3B	L2788	3F	Q2636	4H	R2610	3I	R2636	4H	R2678	2D	R2703	3C	R2748	1F	R2781	4D	R2797	3F	U2790	3E
C2641	2A	C2763	1B	C2812	5G	CR2675	2D	CR2717	3D	CR2786	4F	L2798	3E	Q2672	3D	R2612	1H	R2637	4H	R2682	1E	R2705	3C	R2751	2C	R2782	1E	R2798	1E		
C2652	4F	C2764	1B	C2814	5H	CR2686	2H	CR2718	4D	CR2788	4E			Q2674	3D	R2616	4I	R2638	4H	R2683	2I	R2708	2E	R2752	2C	R2783	2F	R2920	1A		
C2683	1I	C2765	1B	CR2605	2D	CR2690	3A	CR2741	1E	CR2795	1E	P2601	3D	Q2682	2I	R2617	3I	R2640	3B	R2684	2I	R2710	4D	R2753	2C	R2784	2F	R3129	1A		
C2684	1I	C2766	1B	CR2607	3I	CR2692	3I	CR2742	1E	CR2798†		P2740	1G	Q2684	2I	R2618	3I	R2641	3B	R2685	2I	R2711	3D	R2755	2A	R2785	2G				
C2685	2I	C2767	1B	CR2608	3I	CR2694	3I	CR2743	1E			P2755	2A	Q2686	1I	R2620	5I	R2652	2B	R2686	2I	R2712	5C	R2757	2C	R2786	3F	S2650	3A		
C2686	1I	C2773	2B	CR2609	2I	CR2695	3I	CR2756	1E	J2	5E	P3129	1A	Q2696	2H	R2622	4I	R2653	2A	R2687	2H	R2716	3D	R2759	1D	R2787	4E	S2750	4C		
C2691	1H	C2781	3F	CR2612	2I	CR2696	2H	CR2757	2D	J2100	4E			Q2702	3C	R2623	3I	R2654	2B	R2691	1H	R2718	4D	R2762	1D	R2788	2F				
C2703	3C	C2783	3E	CR2617	4I	CR2698†		CR2759	4D	J2200	4F	Q2602	2C	Q2704	3C	R2625	5I	R2655	2B	R2692	1H	R2719	3D	R2763	2B	R2789	3F	TP2700	2E		
C2712	5C	C2784	3E	CR2618	4I	CR2705	3C	CR2763	2B	J2716	1D	Q2604	3C	Q2712	3D	R2626	3I	R2656	2A	R2693	2A	R2741	1F	R2764	1B	R2790	3F	TP2750	2C		
C2719	3B	C2785	2G	CR2621	4I	CR2706	2C	CR2764	1B	J3000	1G	Q2618	4I	Q2782	4F	R2627	4I	R2657	2A	R2694	3H	R2742	1F	R2765	1B	R2791	2E	TP2760	1C		
C2744	1E	C2786	4E	CR2622	4I	CR2707	2C	CR2765	2B	J3100	3G	Q2620	2I	Q2784	4F	R2630	3H	R2661	3C	R2695	3H	R2743	1F	R2766	1B	R2792	3E	TP2790	2E		
C2752	1C	C2788	2F	CR2623	4I	CR2708	2C	CR2766	1B	J3200	1H	Q2622	4H	Q2786	4E	R2632	3H	R2662	3C	R2696	2H	R2744	2F	R2767	1B	R2793	4E				
C2757	1C	C2789	2G	CR2630	3I	CR2709	3C	CR2767	1B	L2635	5H	Q2624	4I	Q2788	3F	R2633	4H	R2671	2E	R2697	2H	R2745	2F	R2774	2B	R2794	3E	U2690	1I		

Refer to Waveform and Voltage Test Conditions.

14

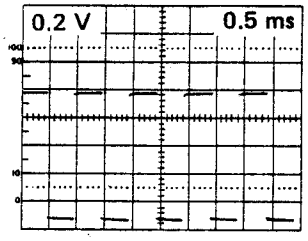

0 V

0 volt point depends on setting of instrument vertical POSITION control.

15

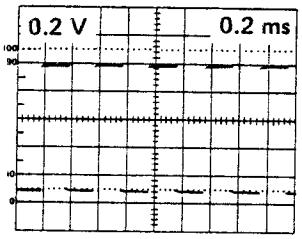

0 V

0 volt point depends on setting of instrument vertical POSITION control.

16

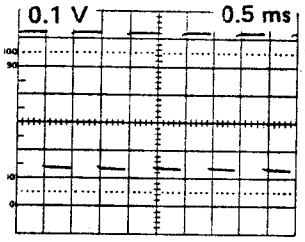

0 V

0 volt point depends on setting of instrument vertical POSITION control.

17

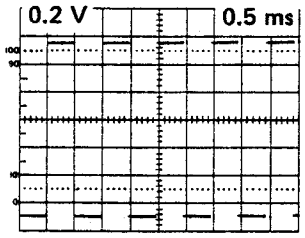

0 V

0 volt point depends on setting of instrument vertical POSITION control.

18

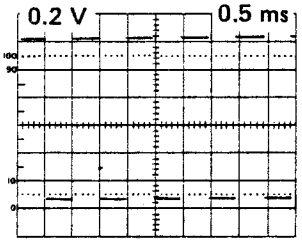

0 V

0 volt point depends on setting of instrument vertical POSITION control.

19

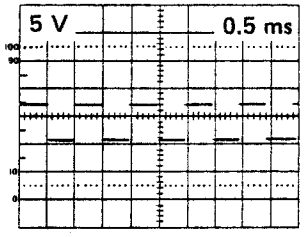

0 V

0 volt point depends on setting of instrument vertical POSITION control.

20

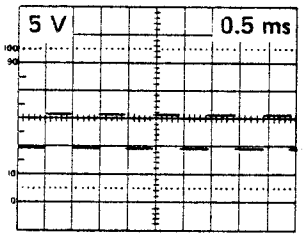

0 V

0 volt point depends on setting of instrument vertical POSITION control.

2237-116

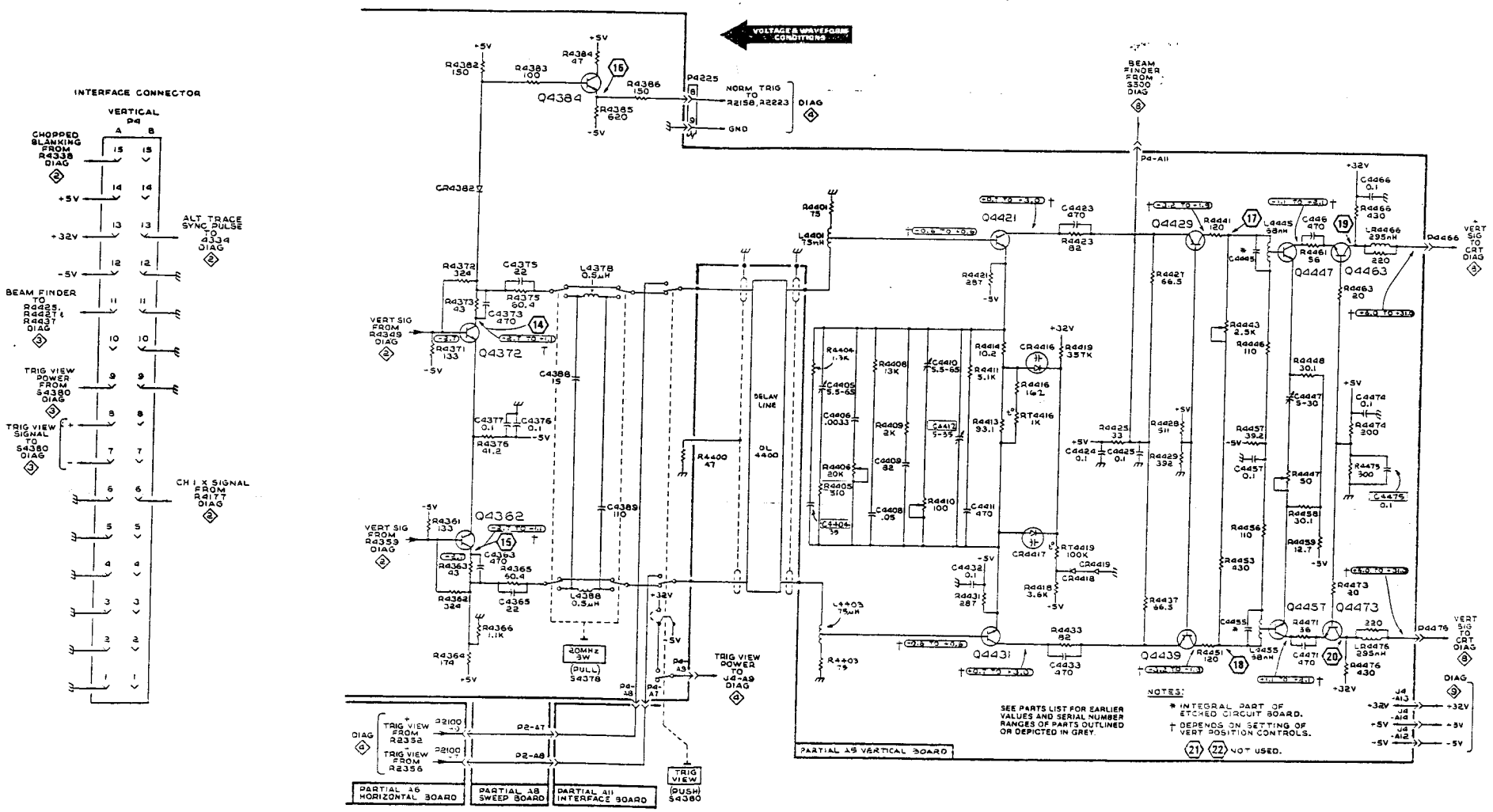

465M

2237-100
R&VA SEPT 1980

DELAY LINE DRIVER, VERTICAL AMPLIFIER & INTERFACE CONNECTOR 3

AMPL, & INTERFACE (FO-5) 3

FO-5 (Front)

Refer to Waveform and Voltage Test Conditions.

23

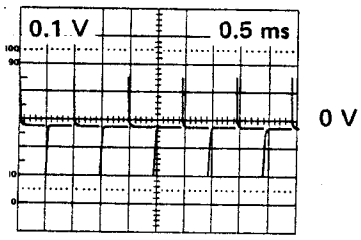

0 volt point depends on setting of instrument vertical POSITION control.

24

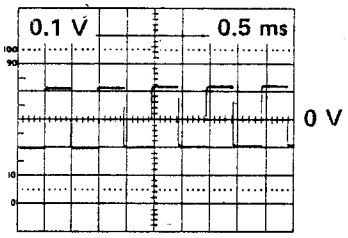

0 volt reference depends on setting of instrument LEVEL control.
No signal with instrument coupling to LF REJ.

25

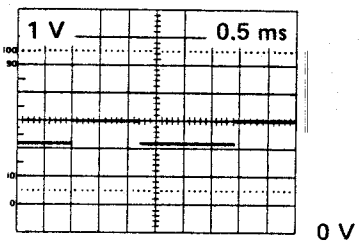

26

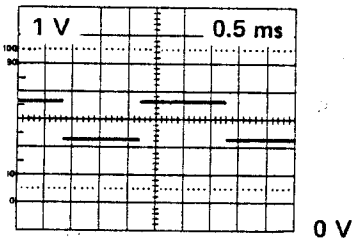

27

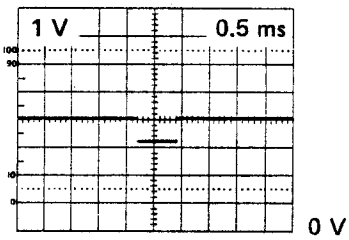

28

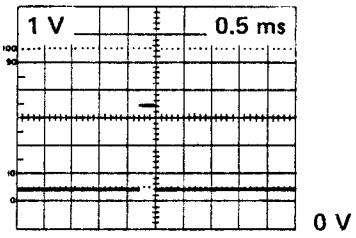

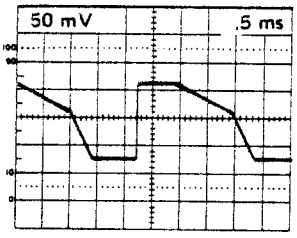

Sweep ramp from pin 2 of U2900 for time comparison.

2237-117

For Service Manuals Contact
MAURITRON TECHNICAL SERVICES
8 Cherry Tree Rd, Chinnor
Oxon OX9 4QY
Tel:- 01844-351694 Fax:- 01844-352554
Email:- enquiries@mauritron.co.uk

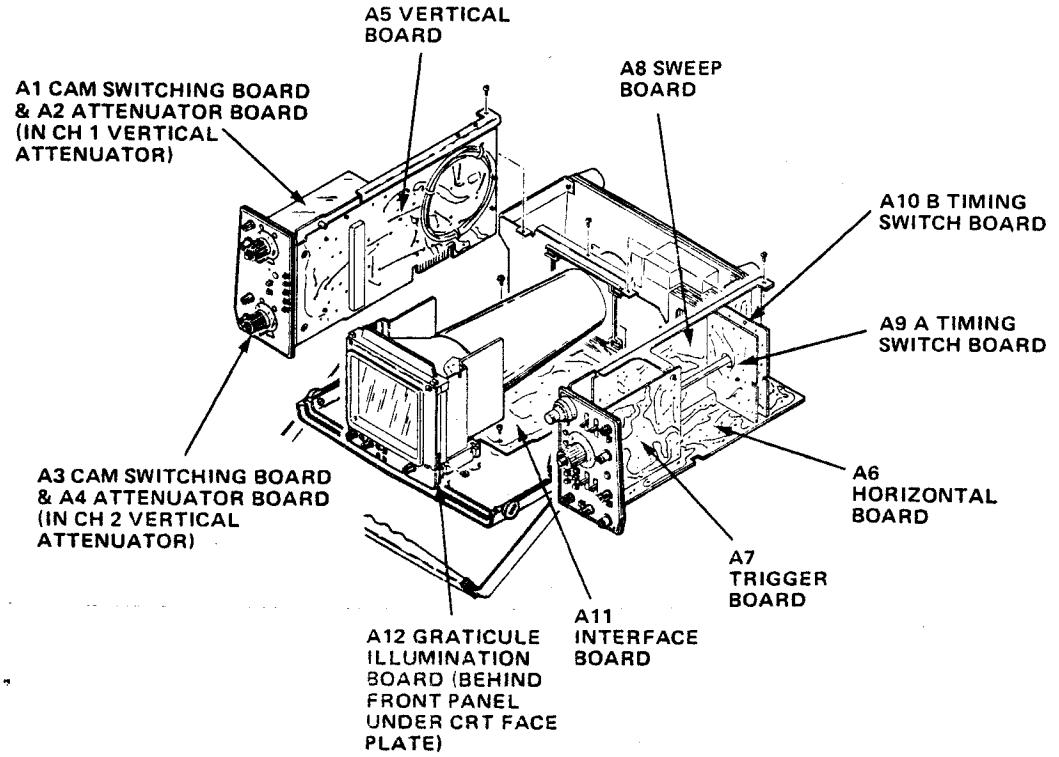
A5 VERTICAL BOARD
A8 SWEEP BOARD
A1 CAM SWITCHING BOARD & A2 ATTENUATOR BOARD (IN CH 1 VERTICAL ATTENUATOR)
A10 B TIMING SWITCH BOARD
A9 A TIMING SWITCH BOARD
A3 CAM SWITCHING BOARD & A4 ATTENUATOR BOARD (IN CH 2 VERTICAL ATTENUATOR)
A6 HORIZONTAL BOARD
A7 TRIGGER BOARD
A11 INTERFACE BOARD
A12 GRATICULE ILLUMINATION BOARD (BEHIND FRONT PANEL UNDER CRT FACE PLATE)

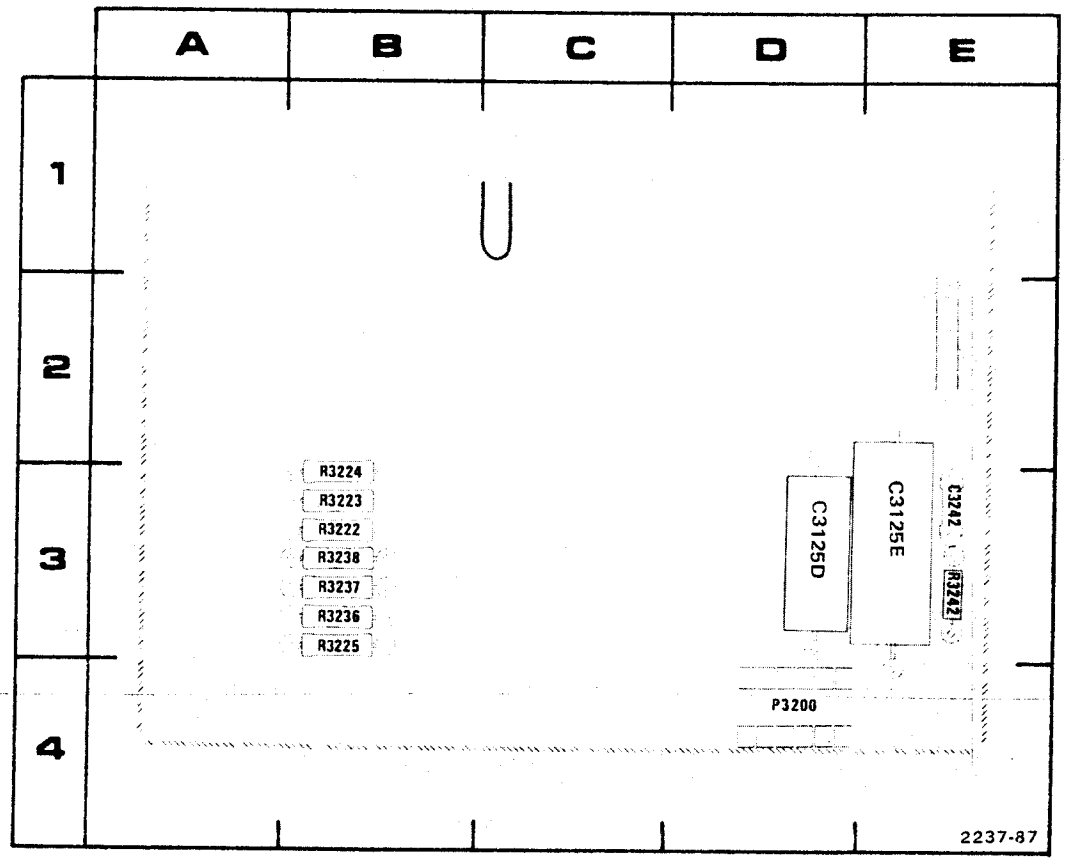

FOR LOCATION OF R3129, SEE
A8 SWEEP BOARD

Figure 6-13. A10 Timing Switch bd (B Sweep) component locations.

CKT NO	GRID LOC	CKT NO	GRID LOC	CKT NO	GRID LOC
C3242	3E	R3222	3B	R3237	3B
C3125D	3D	R3223	3B	R3238	3B
C3125E	3E	R3224	3B	R3242	3E
		R3225	3B		
P3200	4D	R3236	3B		

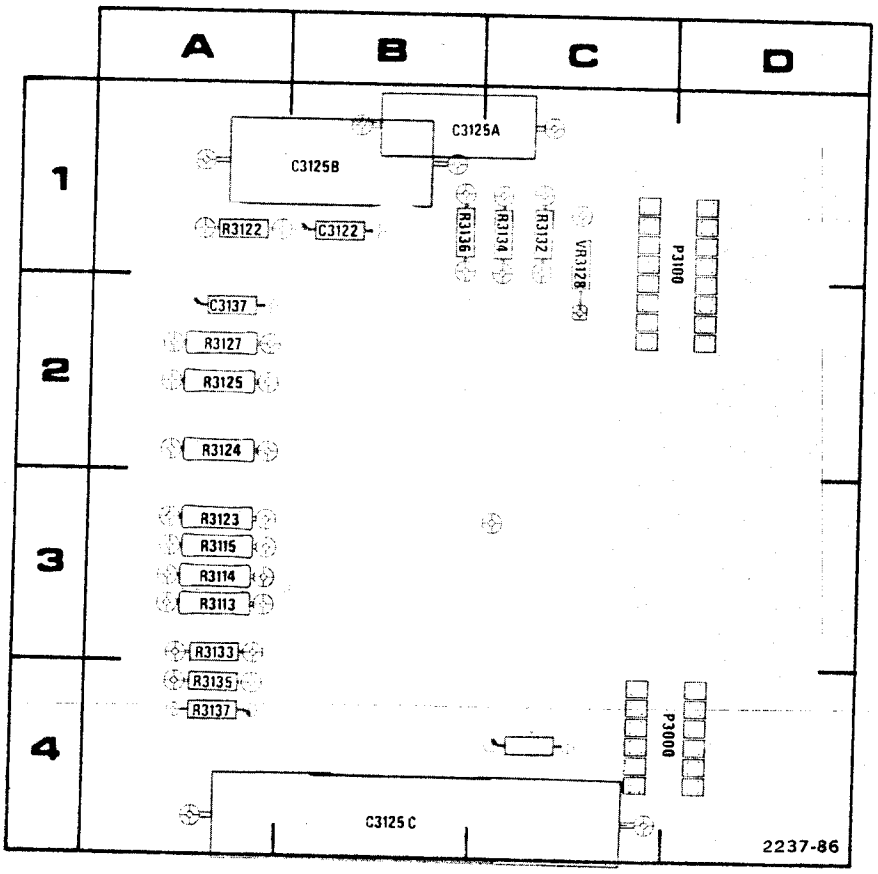

Figure 6-12. A9 Timing Switch bd (A Sweep) component locations.

CKT NO	GRID LOC	CKT NO	GRID LOC	CKT NO	GRID LOC
C3122	1B	R3113	3A	R3132	1C
C3125A	1B	R3114	3A	R3133	3A
C3125B	1B	R3115	3A	R3134	1C
C3125C	4B	R3122	1A	R3135	4A
C3137	2A	R3123	3A	R3136	1B
		R3124	2A	R3137	4A
P3000	4D	R3125	2A		
P3100	1D	R3127	2A	VR3128	1C

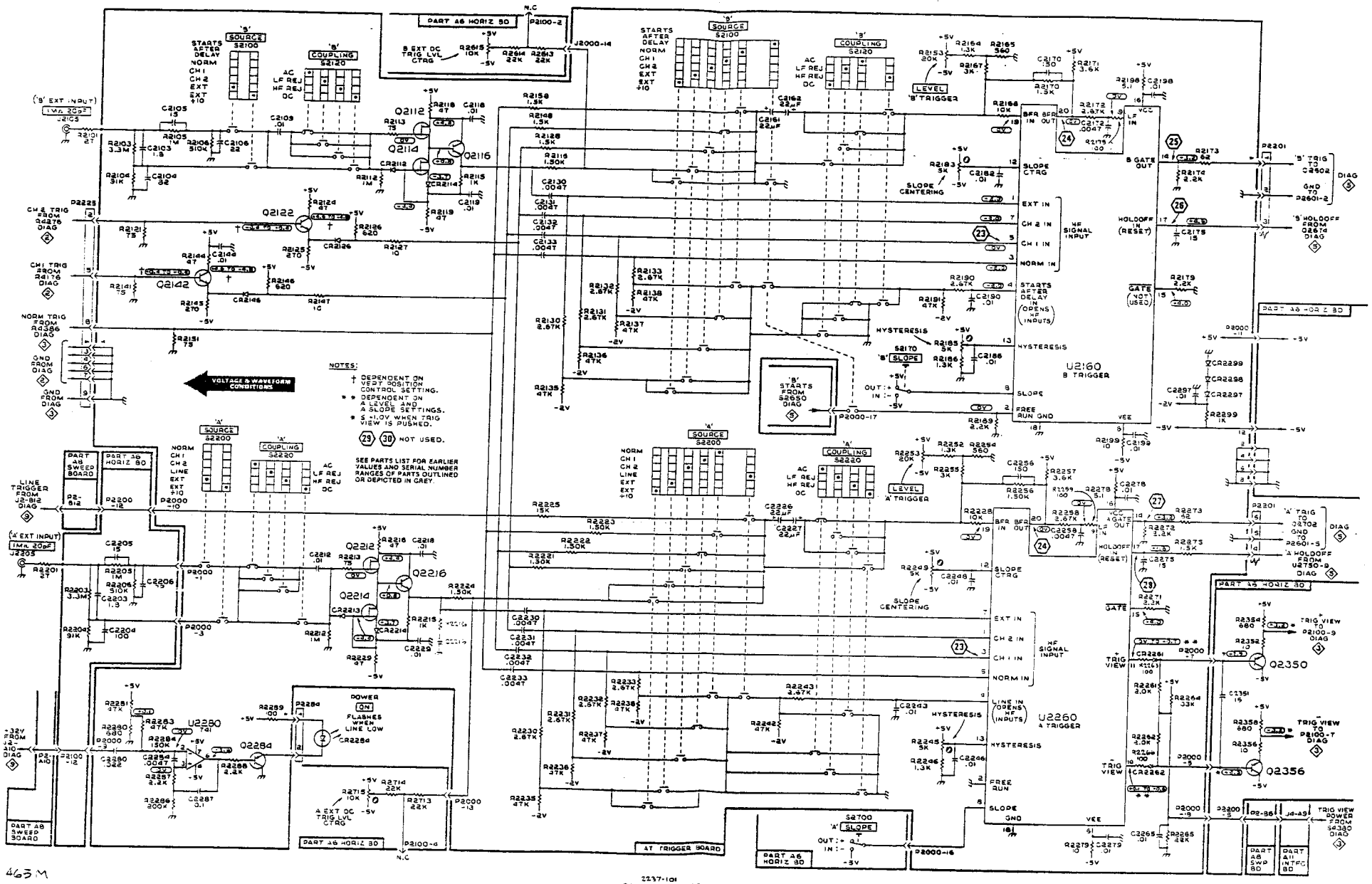

463M

2237-101
REV A SEPT 1980

TRIGGER AMPLIFIER 4

FO-6 (Front)

Refer to Waveform and Voltage Test Conditions.

31 Use this waveform for time comparison

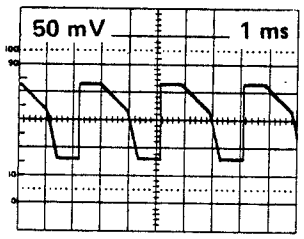

AC Coupled

32 AC Coupled

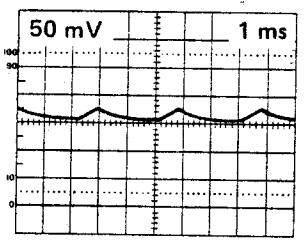

Amplitude of waveform increases as time between end of holdoff and triggering increases.

33

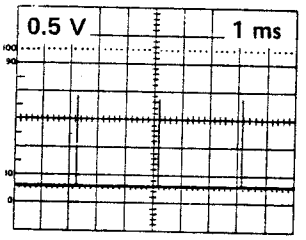

34

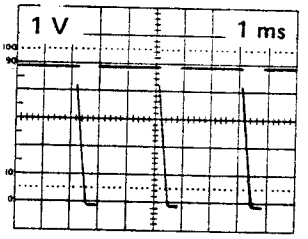

0 V

35

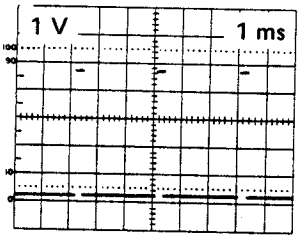

0 V

36

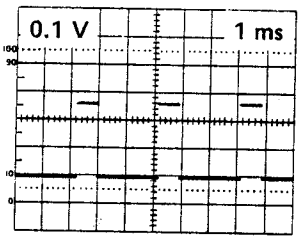

0 V

Instrument HORIZ MODE set to A or A INTEN. In B DLY'D or MIX, TP2797 is at –5 V dc.

37

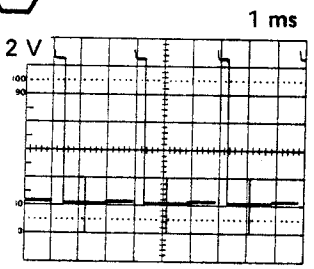

Slight positive step at –0.6 V only present in MIX. Positive spike at –0.6 V is higher in A INTEN and B DLY'D modes.

38

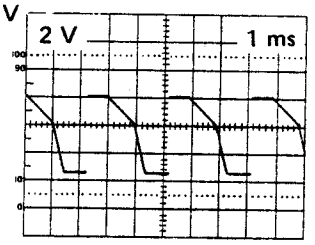

Position of transition between A and B sweep rates dependent on setting of instrument DELAY TIME POS control.

38

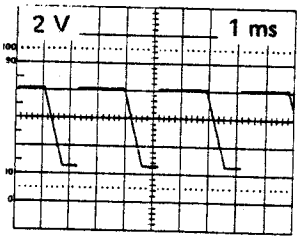

Instrument HORIZ MODE to B DLY'D. Beginning of sweep ramp dependent on setting of instrument DLEAY TIME POS control.

39

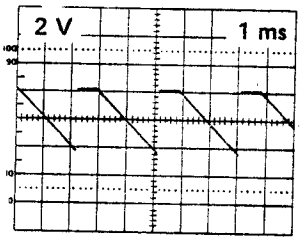

40

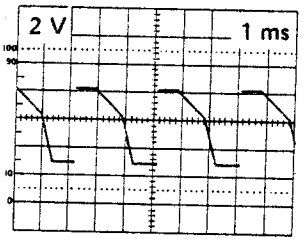

Instrument HORIZ MODE set to B DLY'D.

40

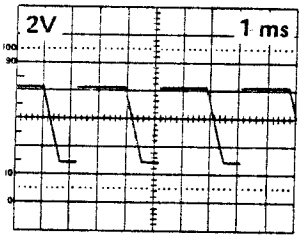

With instrument HORIZ MODE set to A or A INTEN, TP2697 goes to –5 V dc.

41

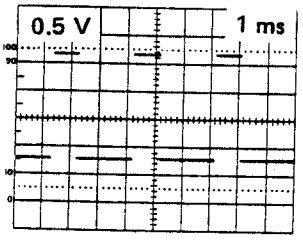

0 V

42

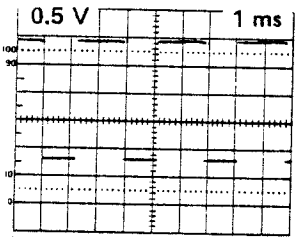

0 V

43

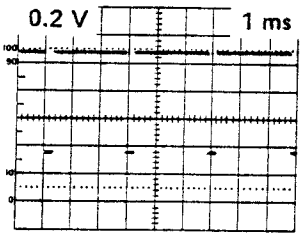

0 V

LO when 41 42 are both LO

2237-118

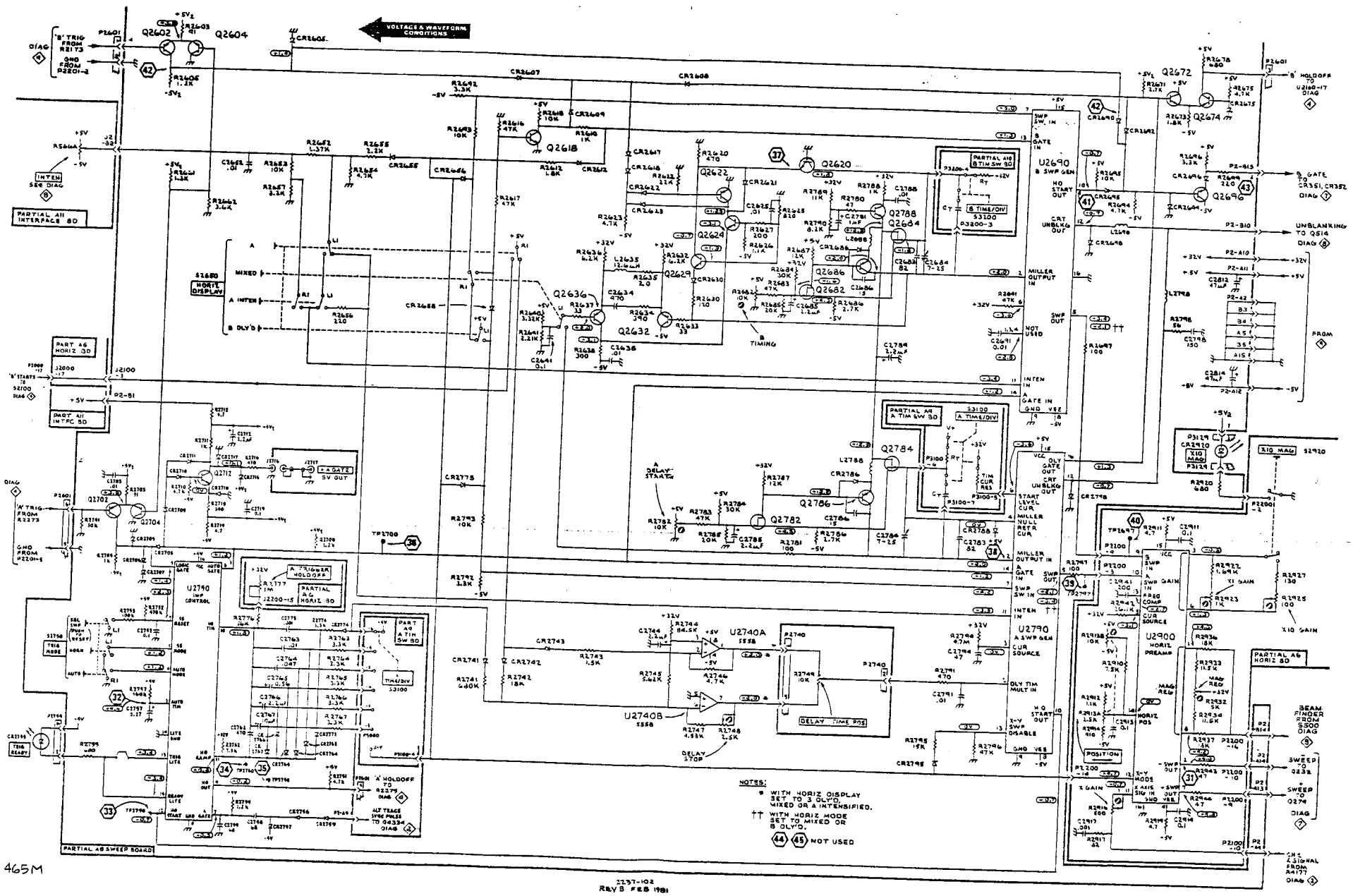

SWEEP & HORIZONTAL PREAMPLIFIER

465M

FO-7 (Front)
(FO-7 Rear Blank)

SWEEP & HORIZ PREAMPLIFIER (FO-7)

0 V

etween A
ndent on
ELAY

Z MODE set
697 goes to

118

CKT NO	GRID LOC	CKT NO	GRID LOC	CKT NO	GRID LOC	CKT NO	GRID LOC	CKT NO	GRID LOC	CKT NO	GRID LOC	CKT NO	GRID LOC	CKT NO	GRID LOC
C232	4G	C721	4B	CR557	9D	P571	6H	R235	4F	R506	5C	R723	2B	TP376	9H
C233	4G	C722	1B	CR582	8E	P573	6F	R236	4F	R512	5B	R725	2B	TP382	9H
C236	3G	C723	1B	CR584	8F	P575	7F	R241	4F	R513	5C	R728	3B	TP526	6B
C244	4F	C725	2B	CR721	3C	P736	4B	R243	5F	R514	5B	R731	3B	TP527	6B
C246	4F	C735	2B	CR734	3B	P746	4C	R244	5F	R515	6B	R732	3B	TP552	9D
C272	4G	C738	5F	CR735	1B	P768	4D	R245	5H	R516	6B	R733	2B	TP773	2E
C273	4H	C741	2D	CR738	4E	P780	4I	R246	5F	R517	5B	R734	5D		
C284	4H	C743	1C	CR741	3C			R247	5G	R521	6B	R735	1C	U550	8B
C286	5H	C748	6F	CR744*	2B	Q232	3G	R272	4G	R522	6B	R736	1D	U722	1B
C288	4H	C761	4D	CR748	4E	Q234	4F	R273	4G	R523	6B	R737	1C	U762	1C
C354	5B	C763	2D	CR762	1D	Q244	4F	R275	4H	R524	6B	R738	3C		
C376	9I	C768	5F	CR763	1E	Q246	4F	R276	3F	R525	5C	R740	3E	VR288	4H
C383	9I	C773	2E	CR764	1E	Q274	4H	R283	5H	R526	6B	R741	2C	VR353	5B
C386	8G			CR765	1E	Q284	4H	R284	5H	R532	9F	R742	2C	VR524	5B
C503	5C	CR235	4G	CR766	1E	Q286	4H	R285	4H	R533	6B	R743	1C	VR533	9E
C515	6B	CR236	4G	CR768	4E	Q356	4B	R286	5H	R541	6F	R745	3C	VR552	8B
C516	6B	CR351	4C			Q358	5B	R287	5G	R542	6F	R746	2C	VR553*	8B
C518	5B	CR352	4B	DS563	7C	Q376	8G	R288	5H	R543	8F	R747	2C	VR566	7I
C522	6B	CR353	5B	DS564	7C	Q382	9H	R352	5C	R544	6D	R748	5D	VR722	1B
C523	6B	CR358	4C			Q386	9H	R353	4B	R546	7F	R761	3E	VR725	2B
C524	5B	CR372	9H	F558	9F	Q514	5C	R354	4B	R547	8F	R762	2C	VR736	5I
C528	6C	CR373	9H	F736	4B	Q518	5B	R356	4C	R548	8F	R763	1C	VR738	3C
C533	9E	CR504	5C	F746	4C	Q524	6B	R358	5B	R553	9C	R764	1D	VR749	7G
C543	6F	CR505	6E	F768	4C	Q526	6C	R372	9H	R554	9D	R765	2C	VR769	6H
C545	7F	CR506	7F			Q544	5D	R373	9H	R556	9C	R766	2C	VR782	4I
C548	8E	CR507	5C	J2	3H	Q548	8F	R374	9H	R563	6C	R767	2E		
C558	9D	CR513	5C	J4	7G	Q552	9D	R375	9H	R564	6D	R768	4D	W744*	2C
C564	6D	CR514	5B	J358	5B	Q556	9C	R376	8H	R566A	7I	R769	1D		
C566	7F	CR518	5B	J503	5B	Q732	3B	R377	8H	R566B	7I	R772	2E		
C572	7F	CR524	6B			Q734	2B	R382	9H	R571	6I	R773	2E		
C575	7F	CR525	6C	L386	9G	Q742	2C	R383	9I	R572	9F	R776	2E		
C576	7F	CR528	6C	L554	9C	Q744	2C	R386	9G	R573	9G	R777	4D		
C577	5D	CR541	6F	L558	9E	Q764	1D	R387	9I	R574	6F	R782	4I		
C582	7E	CR552	9B	L582	7E	Q766	2D	R388	9I	R575	6F	R785	4J		
C584	5G	CR553	9C			Q784	2E	R502	8G	R576	7H				
C707	3C	CR554	9C	P244	4G			R503	5C	R577	5D	S500	6I		
C708	3D	CR555	9C	P284	4G	R232	4G	R504	5E	R721	3B				
C709	3D	CR556	9C	P386	9I	R233	4G	R505	5B	R722	2B	T550	8D		

For Service Manuals Contact
MAURITRON TECHNICAL SERVICES
8 Cherry Tree Rd, Chinnor
Oxon OX9 4QY
Tel:- 01844-351694 Fax:- 01844-352554
Email:- enquiries@mauritron.co.uk

A11 INTERFACE BD
COMPONENT LOCATIONS

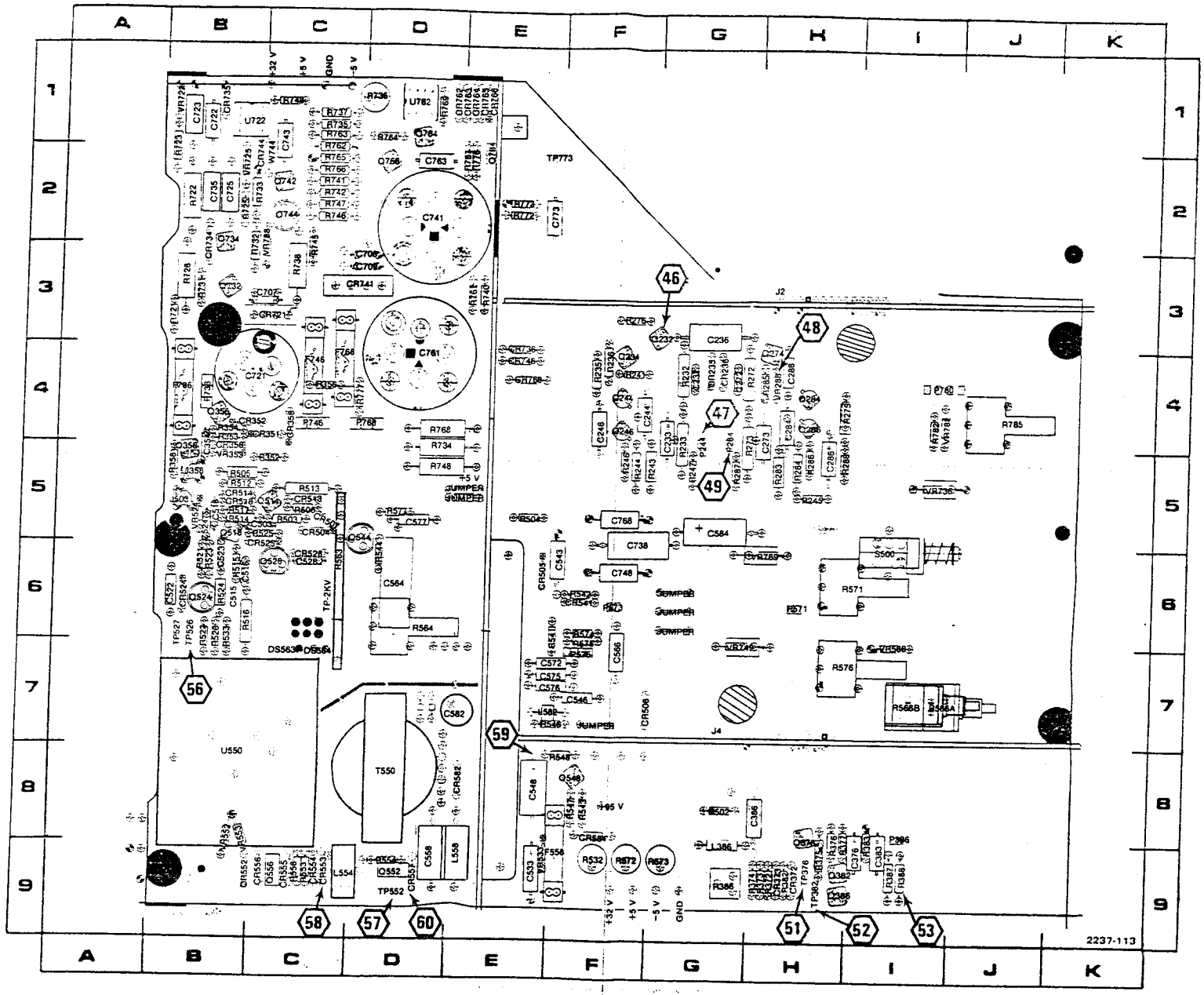

*See Parts List for serial number ranges.

Figure 6-14. A11 Interface board component locations.

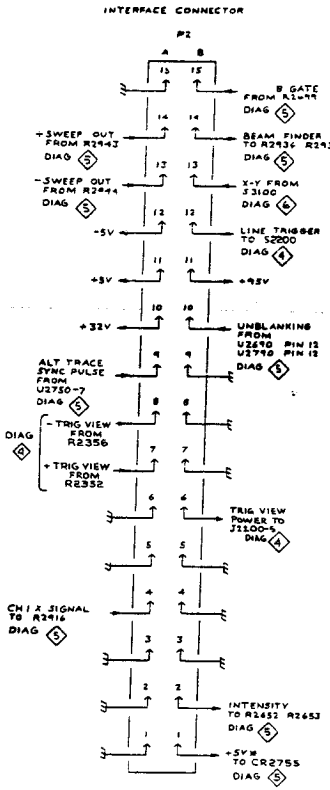

465M

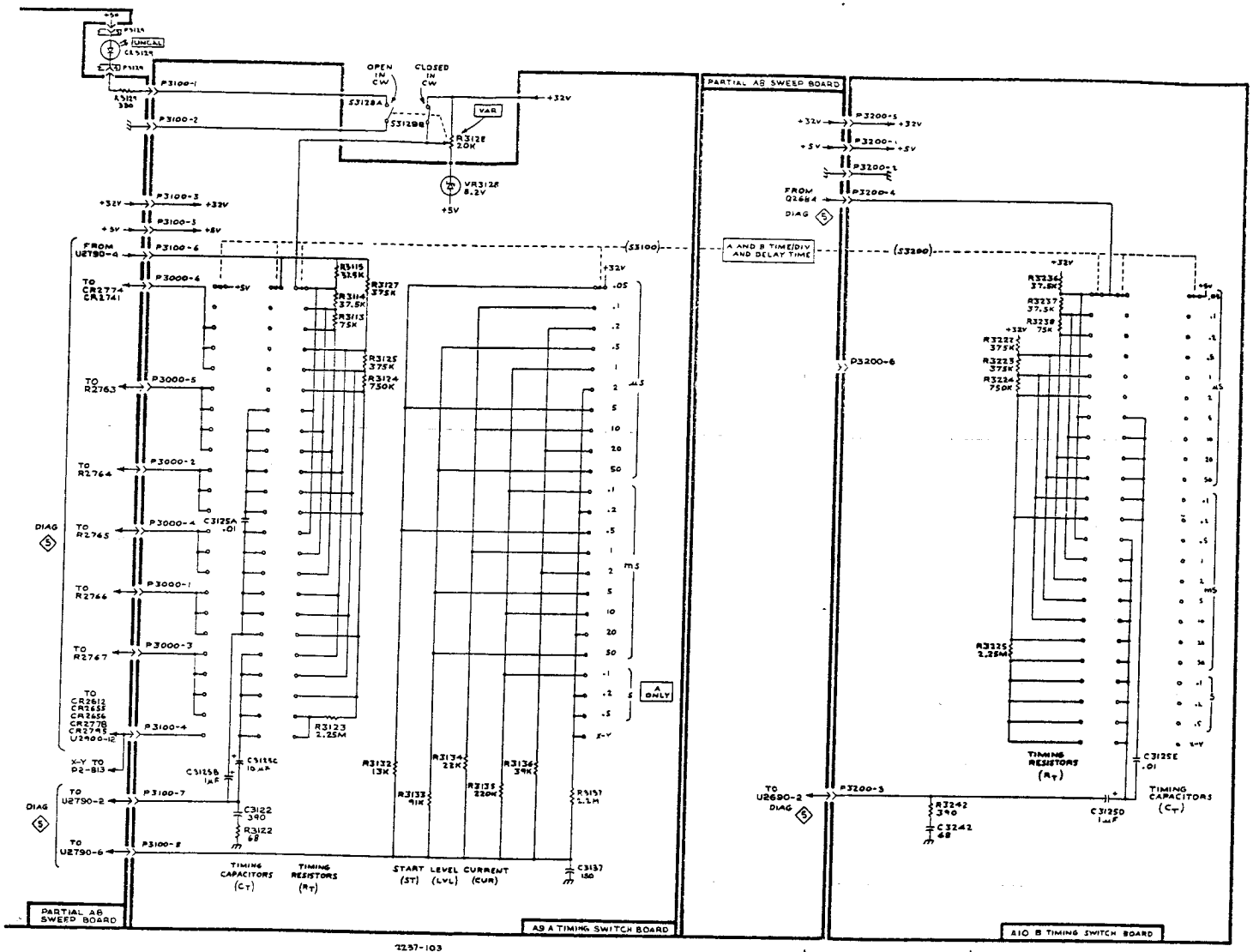

2237-103
REV B FEB 1981

A&B TIMING SWITCH & INTERFACE CONNECTOR 6

FO-8 (Front)
(FO-8 Rear Blank)

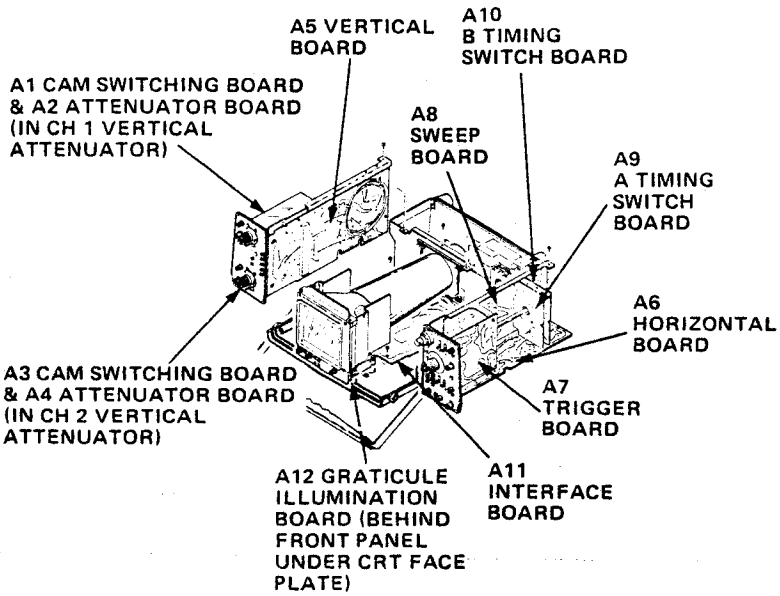

46

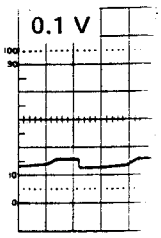

49

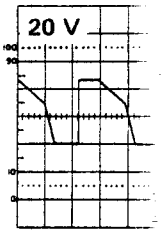

52

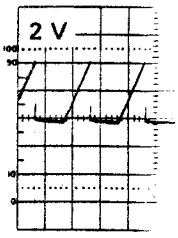

For Service Manuals Contact
MAURITRON TECHNICAL SERVICES
8 Cherry Tree Rd, Chinnor
Oxon OX9 4QY
Tel:- 01844-351694 Fax:- 01844-352554
Email:- enquiries@mauritron.co.uk

Refer to Waveform and Voltage Test Conditions.

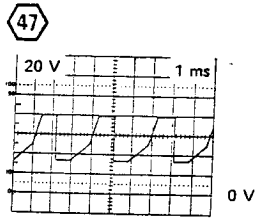

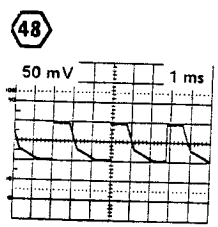

AC Coupled

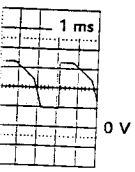

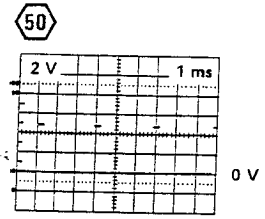

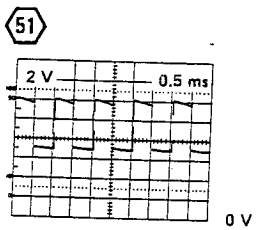

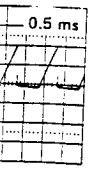

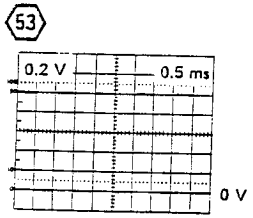

2237-119

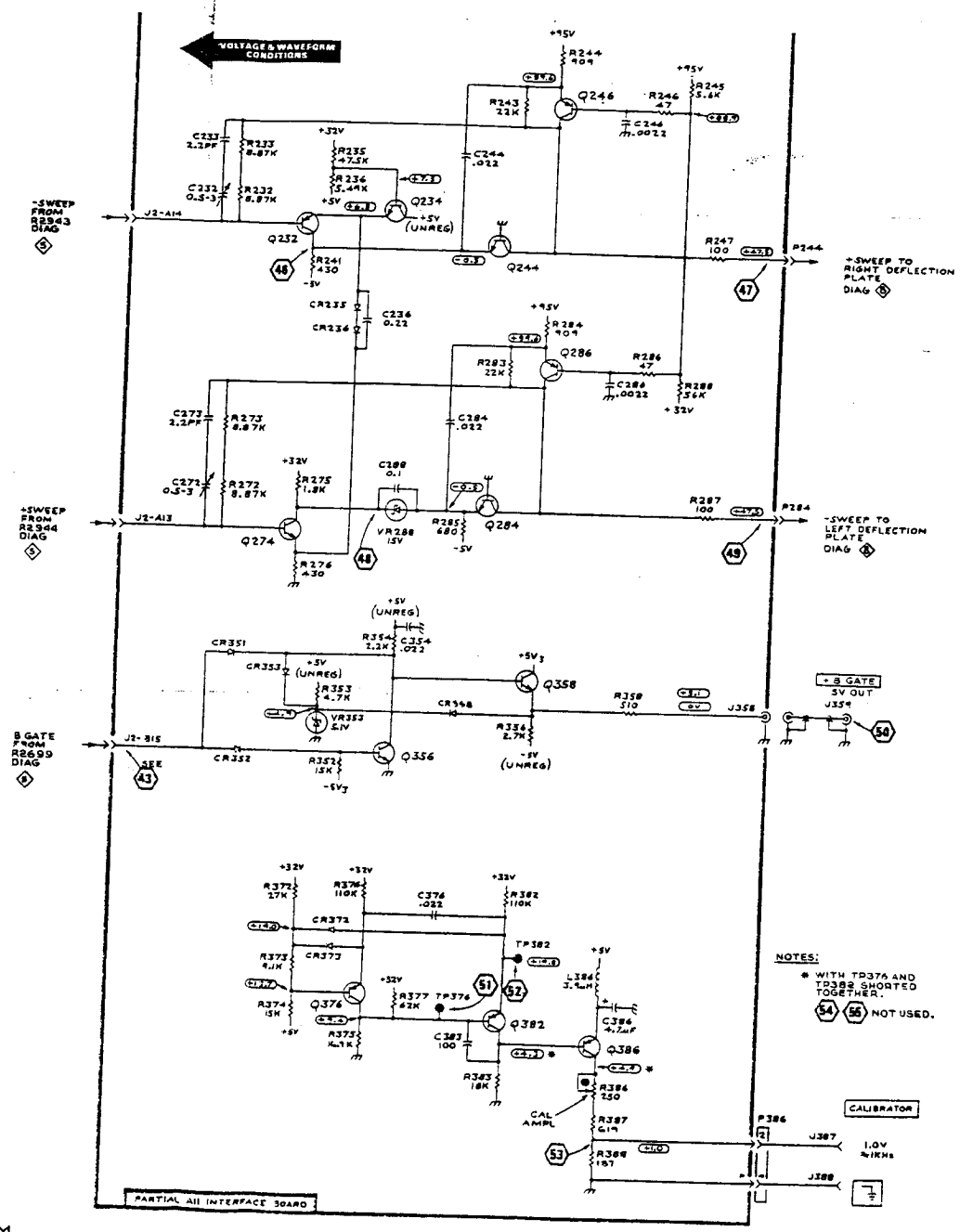

HORIZ AMPL, +B GATE & CALIBRATOR (FO-9) 7

465M

2237-104
REV B FEB 1981

HORIZONTAL AMPLIFIER, +B GATE & CALIBRATOR 7

FO-9 (Front)
(FO-9 Rear Blank)

Refer to Waveform and Voltage Test Conditions.

56

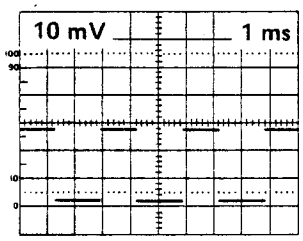

0 V

56

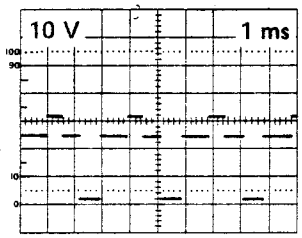

0 V

Instrument HORIZ MODE to A INTEN

57

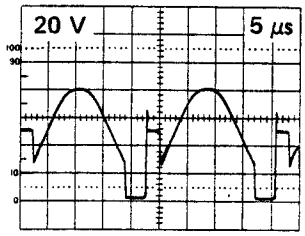

0 V

Test scope trigger SOURCE to CH 1

58

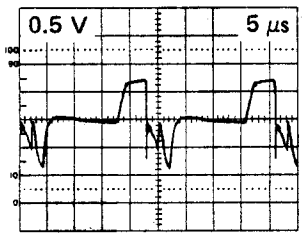

0 V

Test scope trigger SOURCE to CH 1

59

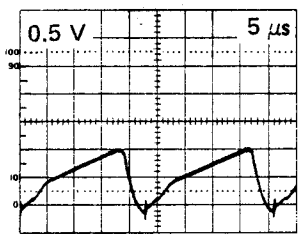

0 V

Test scope trigger SOURCE to CH 1

60

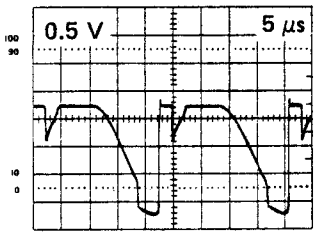

0 V

Test scope trigger SOURCE to CH 1

2237-120

For Service Manuals Contact
MAURITRON TECHNICAL SERVICES
8 Cherry Tree Rd, Chinnor
Oxon OX9 4QY
Tel:- 01844-351694 Fax:- 01844-352554
Email:- enquiries@mauritron.co.uk

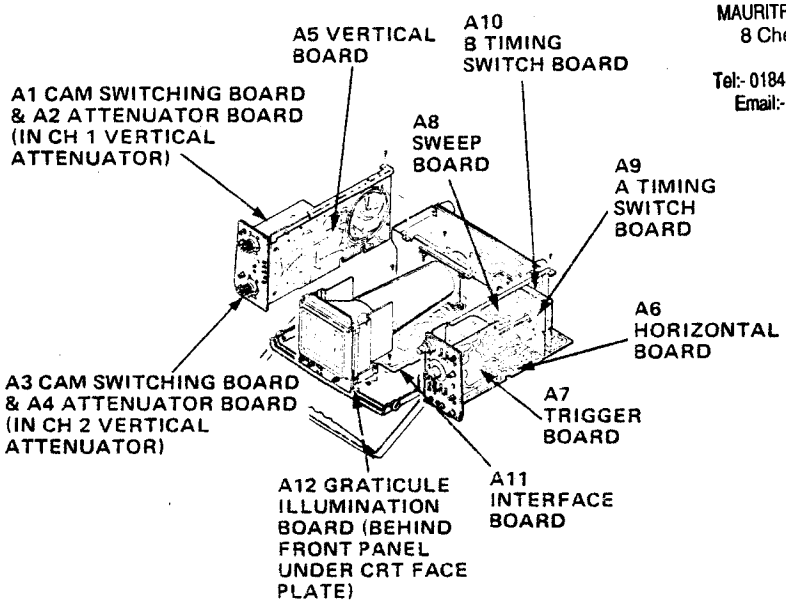

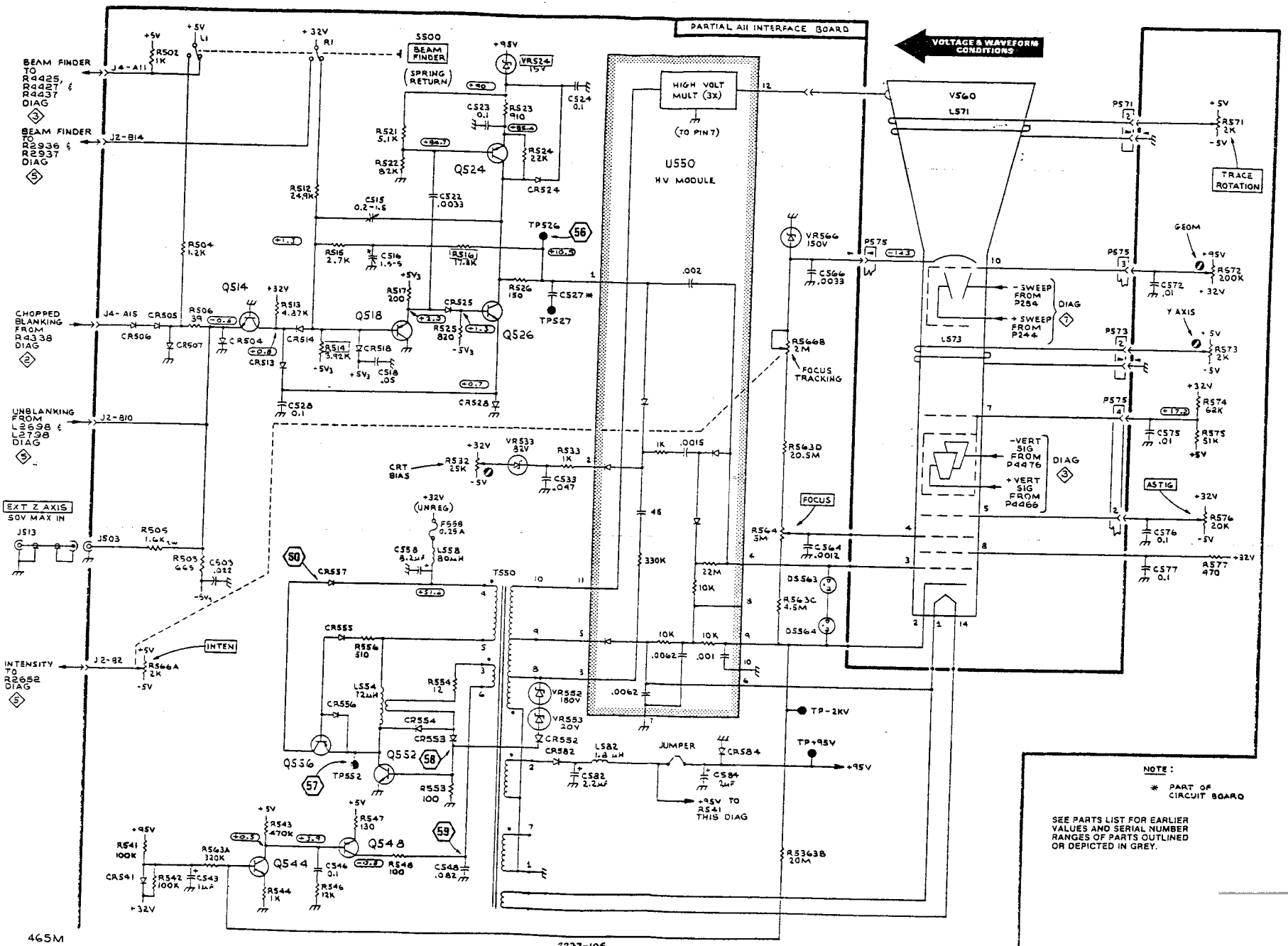

CRT & Z AXIS 8

FO-10 (Front)
(FO-10 Rear Blank)

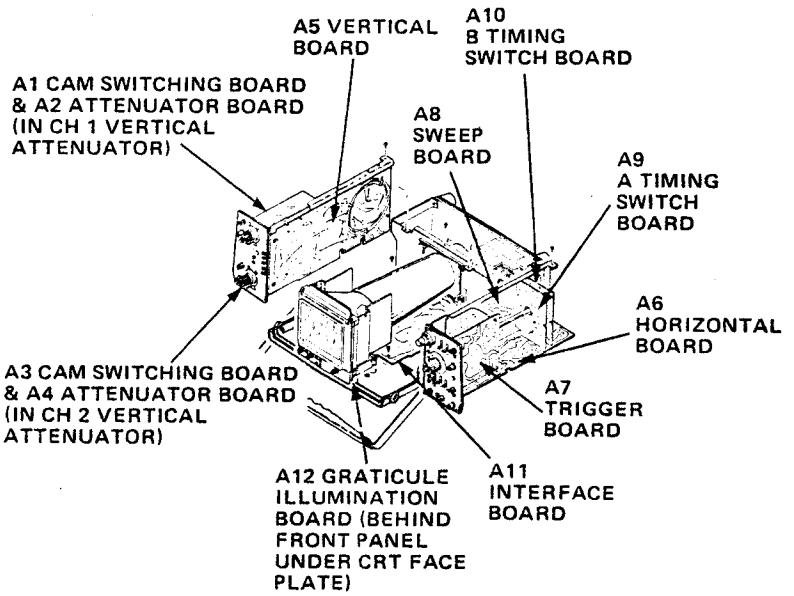

For Service Manuals Contact
MAURITRON TECHNICAL SERVICES
8 Cherry Tree Rd, Chinnor
Oxon OX9 4QY
Tel:- 01844-351694 Fax:- 01844-352554
Email:- enquiries@mauritron.co.uk

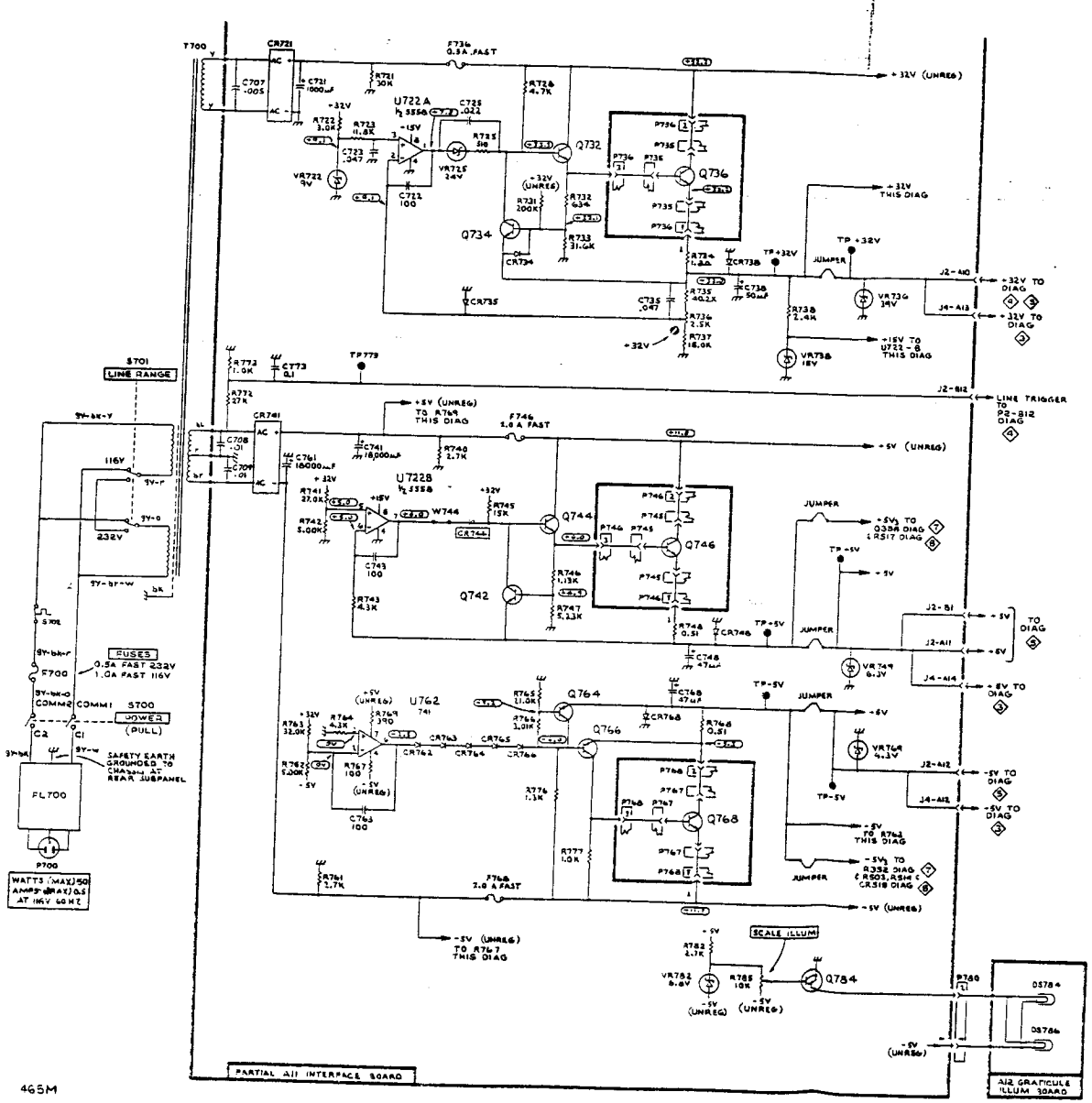

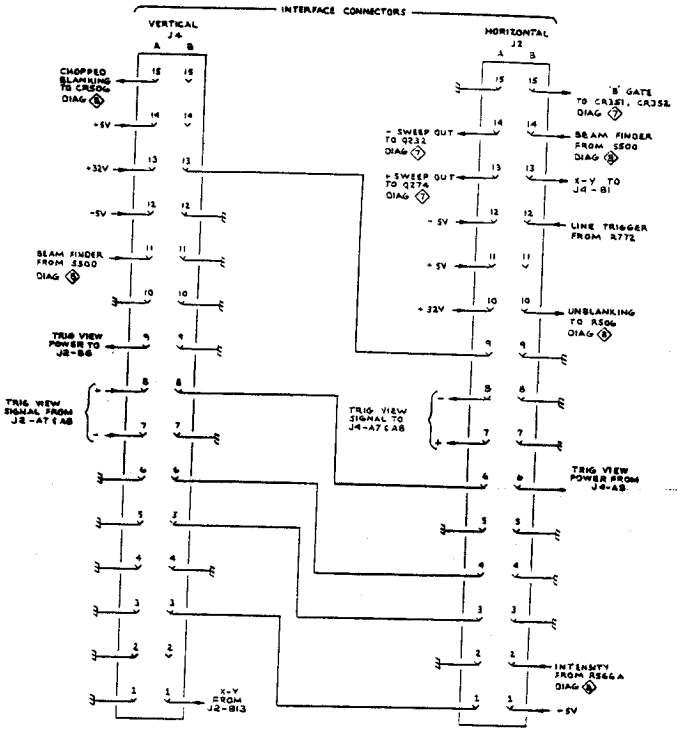

SEE PARTS LIST FOR EARLIER VALUES AND SERIAL NUMBER RANGES OF PARTS OUTLINED OR DEPICTED IN GREY.

POWER SUPPLY & INTERFACE CONNECTORS

POWER SUPPLY & INTERFACE CONN. (FO-11)

FO-11 (Front)
(FO-11 Rear Blank)

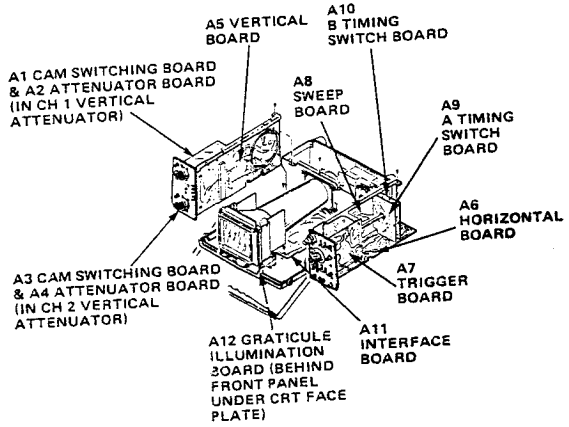

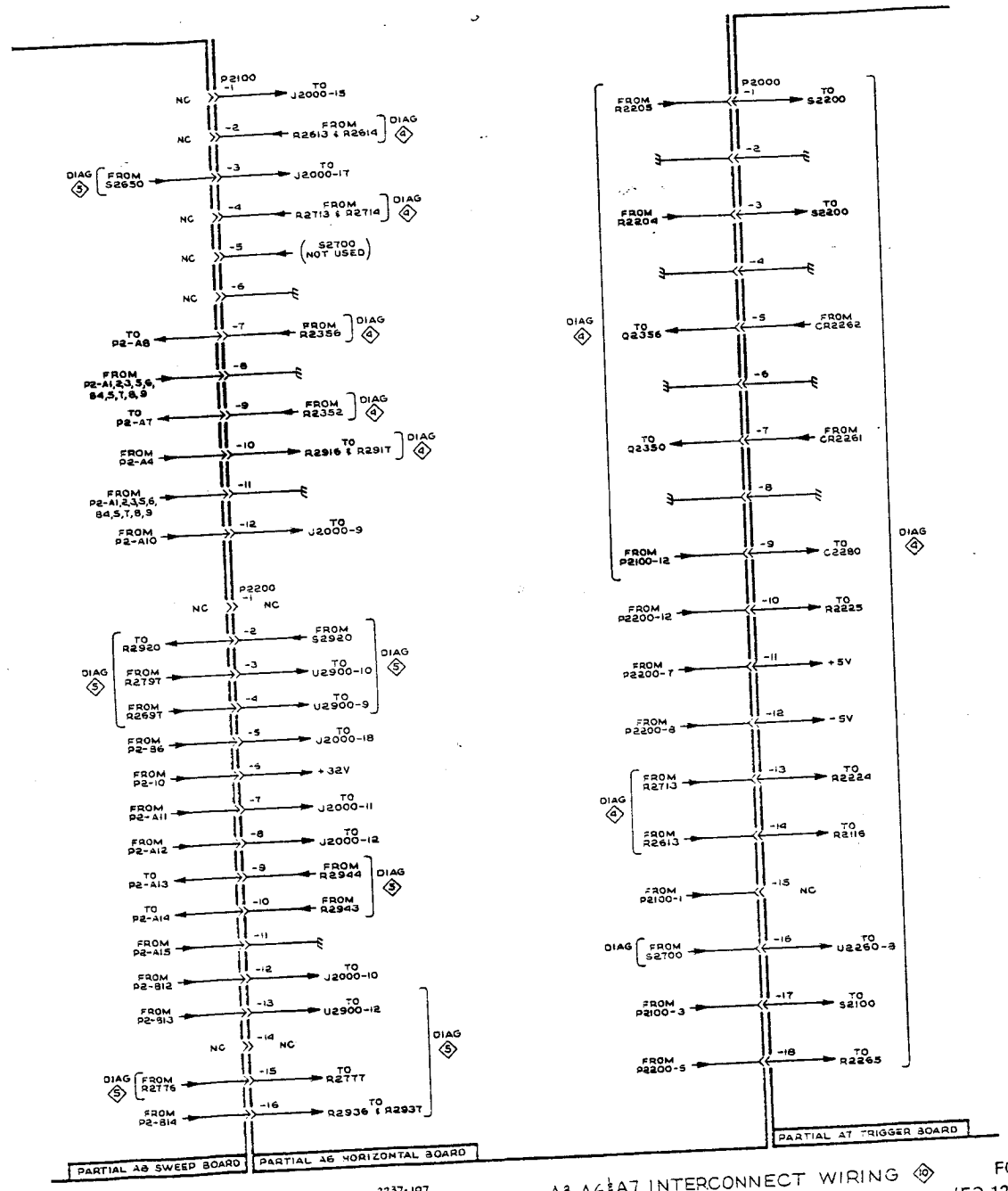

A8, A6 & A7 INTERCONNECT WIRING 10

FO-12 (Front)
(FO-12 Rear Blank)

7337-107
REV B FEB 1981

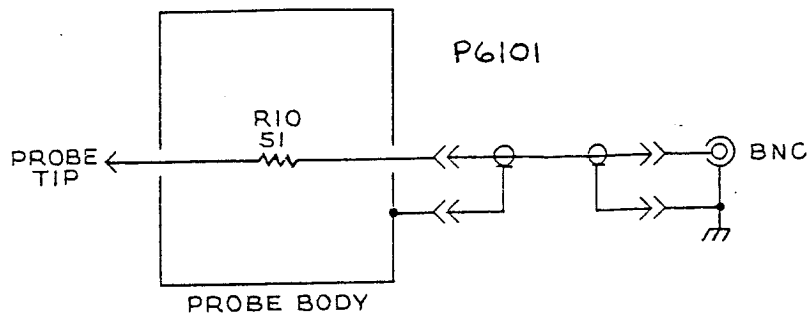

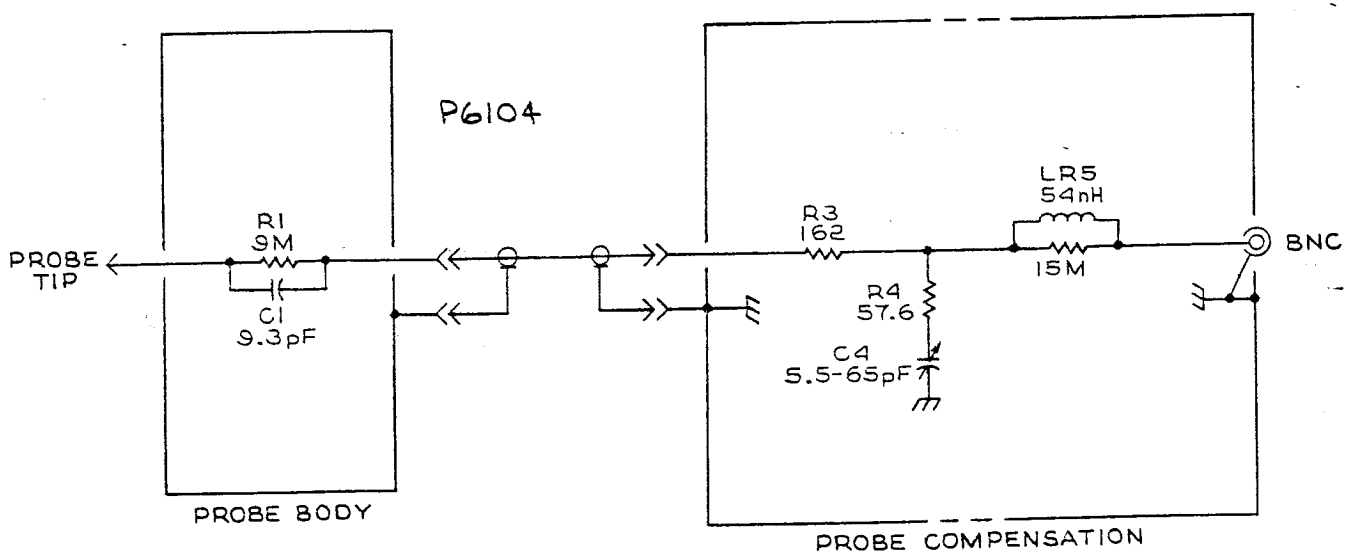

465M 2237-108 REV B FEB 1981 P6101 & P6104 PROBE ⟨11⟩

SECTION VII
ILLUSTRATED PARTS BREAKDOWN
INTRODUCTION

7.1 GENERAL. The Illustrated Parts Breakdown (IPB) covering the 465M oscilloscope, lists and illustrates the assemblies, subassemblies and detail parts installed at the time the end item(s) was manufactured. If an assembly or part (including vendor items), which is different from the original, is installed during the manufacture of later oscilloscopes, all assemblies and parts will be listed (and "Usable On" coded). However, when the original assembly or part does not have continued application (no spares of the original were procured or such spares are no longer authorized for replacement), only the preferred assembly or part is listed. The intended use of the Illustrated Parts Breakdown is for identifying, requisitioning, stocking, and issuing of replacement parts. This IPB is divided into the following sections.

a. Section VII – Introduction

b. Section VIII – Maintenance Parts List

c. Section IX – Numerical Index

d. Section X – Reference Designation Index

7-2. INTRODUCTION. Section VII includes general information, specific information pertaining to individual sections, directions for use of the IPB, abbreviations, manufacturer's federal supply codes and addresses, and source code definitions.

7-3. MAINTENANCE PARTS LIST INTRODUCTION. Section VIII contains the complete Maintenance Parts List breakdown separated into figures by main groups and assemblies, and keyed to associated illustrations by figure and index numbers. The relation of each part to its next higher assembly, or main group, is shown either by indention (paragraph 7-4) or by figure cross reference notes (paragraph 7-5).

7-4. INDENTION. Parts listed in the Maintenance Parts List are indented to indicate item relationship or next higher assembly (NHA). The nomenclature of each assembly is followed in the list (except for attaching parts) by the nomenclature of its components indented one column to the right. This indention indicates the relationship of the component to the assembly. To determine the next higher assembly of a part or assembly, note the column in which the first word of the nomenclature begins. Then the first item directly above, which appears one column to the left (except for attaching parts), is the next higher assembly.

7-5. FIGURE CROSS REFERENCE NOTES. The continuity of parts breakdown lists and their relationship to the complete assemblies is maintained by a figure cross reference note following the nomenclature of the item being referenced, as follows:

a. "See figure _____ for breakdown," following the description of a part number indicates that the complete or continued detailed breakdown for the item noted may be found in the referenced figure.

b. "NHA figure _____," following the description of a part number indicates that the item noted may be found in the figure referenced, with its requirements and relationship to its next higher assembly indicated by column indention (NHA means next higher assembly).

7-6. SIMILAR ASSEMBLIES. Similar assemblies are combined and listed only once. Common parts are listed with the quantity for one assembly. Peculiar parts are listed and noted with their associated assembly in the description column.

7-7. ATTACHING PARTS. Screws, nuts, bolts, etc., which serve as attaching parts, are listed immediatly following, and with the same indention as the item they attach. They may or may not have an index number assigned. These attaching parts are listed in disassembly sequence and are not considered components of the item that they attach. The abbreviation (AP) following the description of a part identifies that part as an attaching part.

7-8. TEKTRONIX PART NUMBERING SYSTEM. The basic Tektronix part number consists of a three digit category followed by a dash and a four digit body followed by a dash and a two digit suffix. An example is 384-1049-00.

7-9. EXPLANATION OF COLUMNS IN SECTION VIII. The following columns have this data included within the limits of the format.

a. **Figure and Index Number.** This column references the part list entry to its location in the illustration.

b. **Part Number.** Any of the following may be found entered in this column.

(1) Manufacturer's part number which is related to the five digit code in the FSCM column.

(2) "------" is used to designate a part procurable only as part of the next higher assembly.

c. **FSCM.** These codes are a five digit manufacturer's assigned code associated with the manufacturer of the part. A cross reference list, code to name is located in paragraph 7-15.

d. **Description.** This column will contain the nomenclature and a short description of each part listed. The notation (80009 No. xxx–xxxx–xx) indicates the Tektronix FSCM code and part number of the item.

e. **Units Per Assembly.** The following types of entries are noted in this column.

(1) The quantity required to make up one higher assembly.

(2) "REF" means "reference" and is used to indicate that the item has been accounted for elsewhere in the Maintenance Parts List.

(3) "AR" means "as required" and is used to designate lengths noted in the description column of special cables.

f. **Usable On Code.** The code letters appearing in this column indicate usability of replacement parts when more than one article is covered in the parts list. Absence of a code letter opposite a part indicates that the part is usable on all articles.

7-10. NUMERICAL INDEX INTRODUCTION. Section IX provides a complete cross reference by means of the part number, listed and arranged in alphanumerical sequence. The order of precedence in beginning the part number arrangement on the extreme left hand (first) position of the part number is as follows:

Letters "A" through "Z"

Numerals "0" through "9"

a. The order of precedence in continuing the alphanumerical arrangement in the second and succeeding positions of the number from left to right is as follows:

Space (blank column)

Diagonal (slant) /

Point (period).

Dash (hyphen)-

Letters "A" through "Z"

Numerals "0" through "9"

b. Alphabetical "0's" shall be considered as numerical "zeros." Spaces, diagonals, points, and dashs do not appear in the extreme left hand position of the part number; however, they may be used in the second and succeeding position of the part number and take precedence over letters and numerals as indicated above.

7-11. SOURCE, MAINTENANCE, AND RECOVERABILITY (SMR) CODE. SMR definitions are set forth in T.O. 00-25-195. Codes were not available for insertion in the SMR column herein as of the publication date of this manual.

7-12. REFERENCE DESIGNATION INDEX INTRODUCTION. Section X contains an alphanumerical listing for all Reference Designaters assigned to electrical components listed by figure and index number in the Maintenance Parts List. Reference Designators have been assigned to electrical components in compliance with MIL-STD-16. They appear in diagrams of electrical and electronic circuits and assist in correlating graphic symbols shown thereon with parts list, descriptions, and part numbers.

7-13. HOW TO USE THIS IPB. For an explanation of how to identify a part whether the part number is or is not known see Figure 7-1.

7-14. ABBREVIATIONS AND LETTER SYMBOLS LIST. The following is a list of abbreviations and symbols used throughout this technical order in compliance with Military Standard MIL-STD-12:

Abbreviation	Term
A	Ampere
AC	Alternating Current
AWG	American Wire Gage

@

Abbreviation	Term
BDGH	Binding Head
BSHG	Bushing
DC	Direct Current
DIA	Diameter
FEM	Female
MW	Megawatt
NA	Nanoamperes
NE	Neon
NHA	Next Higher Assembly
NPN	Negative-Positive-Negative (transistor)
NPO	Negative-Positive-Zero
OD	Outside Diameter
FET	Field-Effect Transistor
FILH	Fillister Head
FLH	Flat Head
FT	Foot
H	High
HEX HD	Hexagonal Head
HEX	Hexagon
HV	High Voltage
ID	Inside Diameter
IN	Inch
K	Kilo
L	Length
M	Mega
MA	Milliampere
MAX	Maximum
MTG	Mounting
PA	Picoamperes
PF	Picofarad
PIV	Peak Inverse Voltage
PNH	Pan Head
PNP	Positive-Negative-Positive (transistor)
RPM	Revolution Per Minute
SQ	Square
SST	Stainless Steel
STL	Steel
THK	Thick
UA	Microampere
UF	Microfarad
UH	Microhenry
V	Voltage
W	Watt or Wide

7-15 MANUFACTURER'S CODE CROSS REFERENCE LIST.

The following list is a cross reference, code to name and address, of manufacturers supplying items or assemblies. These are the codes contained in Government publication, "Code for Manufacturers Handbook H4-1."

Code	Manufacturers Name and Address
00779	Amp Inc. P. O. Box 3608 Harrisburg, PA 17105
00853	Sangamo Electric Co., S. Carolina Division P. O. Box 128 Pickens, SC 29671
01121	Allen-Bradley Co. 1201 2nd Street South Milwaukee, WI. 53204
01295	Texas Instruments Inc., Semiconductor Group P. O. Box 5012, 13500 N. Central Expressway Dallas, TX 75222
02735	RCA Corp. Solid State Division Route 202 Somerville, NJ 08876
03888	KDI Pyrofilm Corp. 60 S. Jefferson Road Whippany, NJ 07981
04713	Motorola Inc., Semiconductor Products Division P. O. Box 20923 5005 E. McDowell Road Phoenix, AZ 85036
05129	Kilo Engineering Co. 2015 D LaVerne, CA 91750
05276	ITT Pomona Electronics Division P. O. Box 2767 1500 E. 9th Street Pomona, CA 91766
05397	Union Carbide Corp., Materials Systems Division 11901 Madison Ave. Cleveland, OH 44101
05574	ViKing Industries Inc. 21001 Nordhoff Street Chatsworth, CA 91311
07263	Fairchild Camera and Instrument Corp., Semiconductor Division 464 Ellis Street Mountain View, CA 94042
07700	Technical Wire Products Inc. 129 Dermody Street Cranford, NJ 07016

Code	Manufacturer's Name and Address
07910	Teledyne Semiconductor 12515 Chadron Ave. Hawthorne, CA 90250
08261	Spectra-Strip Corp. 7100 Lampson Ave. Garden Grove, CA 92642
08806	General Electric Co., Miniture Lamp Products Dept. Nela Park Cleveland, OH 44112
09353	C and K Components Inc. 103 Morse Street Watertown, MA 02172
12697	Clarostat Mfg., Co., Inc. Lower Washington Street Dover, NH 03820
15454	Rodan Industries Inc. 2905 Blue Star Street Anahiem, CA 92806
15818	Teledyne Semiconductor 1300 Terra Bella Ave. Mountain View, CA 94043
19396	Illinois Tool Works Inc., Paktron Division 900 Follin Lane S. E. Vienna, VA 22180
22526	Berg Electronix Inc. Youk Expressway New Cumberland, PA 17070
23499	Gavitt Wire and Cable, Division of RSC Industries Inc. 455 Quince Street Escondido, CA 92025
24931	Specialty Connector Co., Inc. 3560 Madison Ave. Indianapolis, IN 46227
27264	Molex Products Co. 5224 Katrine Ave. Downers Grove, IL 60515
28480	Hewlett-Packard Co., Corporate Hq. 1501 Page Mill Road Palo Alto, CA 94304
32997	Bourns Inc., Trimpot Products Division 1200 Columbia Ave. Riverside, CA 92507
36619	Microwave Industries and Components Inc. 6600 Bombardier Street Montreal Que, CAN H1P 1E4
50157	Midwest Components Inc. P. O. Box 787 1981 Port City Blvd. Muskegon, MI 49443
50437	Reliance Steel Products Co. 3700 Walnut Street McKeesport, PA 15132
56289	Sprague Electric Co. North Adams, MA 01247
59730	Thomas and Betts Co. 36 Butler Street Elizabeth, NJ 07207
70485	Atlantic India Rubber Works Inc. 571 W. Polk Street Chicago, IL 60607
71286	Rexnord Inc., Speciality Fastener Division 22 Spring Valley Road Paramus, NJ 07652
71400	Bussmann Mfg., Division McGraw-Edison Co. 2536 W. University Street St. Louis, MA 63107
71590	Centralab Electronics, Division of Globe-Union Inc. P. O. Box 858, Hwy 20 W. Fort Dodge, IA 50501
72982	Erie Technological Products Inc. 644 W. 12th Street Erie, PA 16512
73138	Beckman Industries Inc., Helipot Division 2500 Harbor Blvd. Fullerton, CA 92634
73743	Fischer Special Mfg., Co. 446 Morgan Street Cincinnati, OH 45206

@

Code	Manufacturer's Name and Address
73803	Texas Instruments Inc., Metallurgial Materials Division 34 Forest Street Attleboro, MA 02703
74868	Bunker Ramo Corp., Amphenol RF Division 33 E. Franklin Street Danbury, CT 06810
74970	Johnson E. F. Co. 299 10th Ave., S. W. Washeca, MN 56093
75042	TRW Electronic Components, IRC Fixed Resistors Philadelphia Division 401 N. Broad Street Philadelphia, PA 19108
75915	Littlefuse Inc. 800 E. Northwest Hwy. Des Plaines, IL 60016
76493	Bell Industries Inc., Miller J. W. Division P. O. Box 5825 19070 Reyes Ave. Compton, CA 90224
78189	Illinois Tool Works Inc., Shakeproff Division St. Charles Road Elgin, IL 60120
78488	Stackpole Carbon Co. St. Marys, PA 15857
79136	Waldes Kohinoor Inc. 47-16 Austel Place Long Island City, NY 11101
80009	Tektronix Inc. P. O. Box 500 Beaverton, OR 97077
80031	Mepco-Electa Inc. 22 Columbia Road Morristown, NJ 07960
80294	Bourns Inc., Instrument Division 6135 Magnolia Ave. Riverside, CA 92506

Code	Manufacturer's Name and Address
81483	International Rectifier Corp. 9220 Sunset Blvd. Los Angeles, CA 90069
83501	Gavitt Wire and Cable Division of RSC Industries Inc. Central Street Brookfield, MA 01506
86928	Seastrom Mfg. Company, Inc. 701 Sonora Ave. Glendale, CA 91201
90201	Mallory Capacitor Co., Division of P.R. Mallory and Co., Inc. P. O. Box 372 3029 E. Washington Street Indianapolis, IN 46206
91637	Dale Electronics Inc. P. O. Box 609 Columbus, ME 68601
91737	ITT Cannon-Gremar Inc. 922 S. Lyon Street Santa Ana, CA 92705
91929	Honeywell Inc., Micro Switch Division 11 W. Spring Street Freeport, IL 61032
93410	Essex Group Inc., Controls Division, Lexington Plant P. O. Box 1007 45-55 Plymouth Street Lexington, OH 44967
95712	Bendix Corp., The Electrical Components Division Microwave Devices Plant Hurricane Road Franklin, IN 46131
95987	Weckesser Co., Inc. 4444 West Irving Park Road Chicago, IL 60641
98003	Nielson Hardware Corp. P. O. Box 568 770 Wethersfield Ave. Hartford, CT 06101
98291	Sealectro Corp. 225 Hoyt Mamaroneck, NY 10544

HOW TO USE THE ILLUSTRATED PARTS BREAKDOWN

IF YOU Don't KNOW THE PART NUMBER . . .

Do This

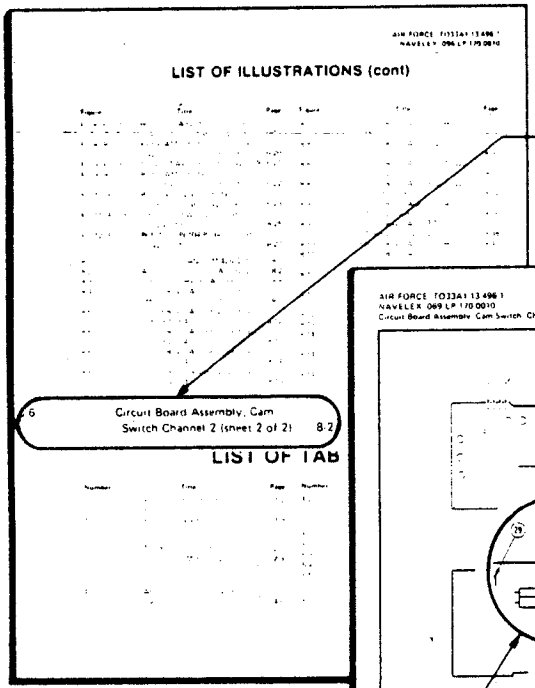

① Refer to illustration list and select the illustration most likely to contain the desired part.

② Refer to the page number indicated and find desired part on illustration.

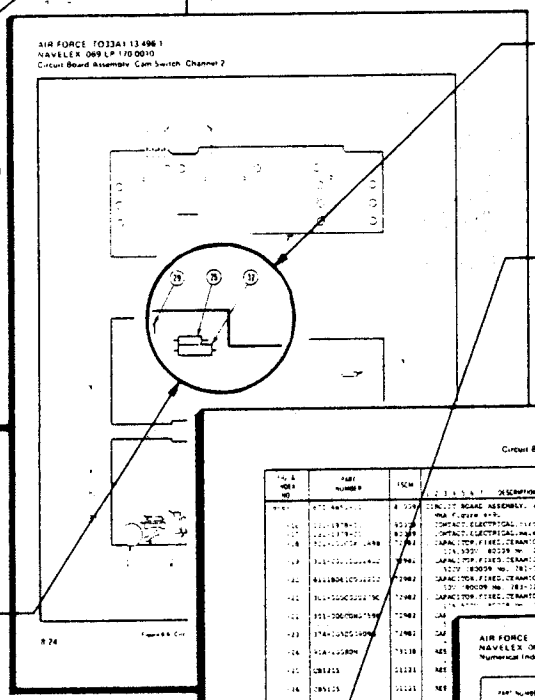

③ Note the Figure Number of the illustration and the Index Number of the part. Refer to the corresponding Figure-Index Number on the Assembly List page for Part Number, Nomenclature etc.

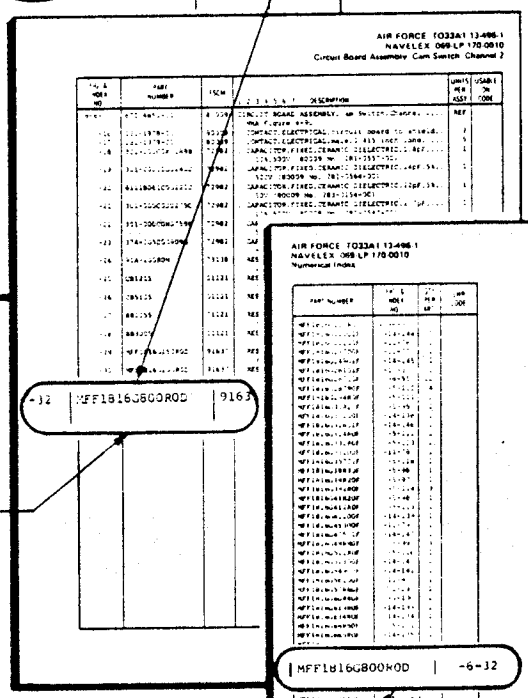

③ If illustration of part is desired - refer to same Figure and Index Number on accompanying illustration.

② Turn to Figure and Index Number indicated to obtain desired information.

IF YOU Do KNOW THE PART NUMBER . . .

Do This

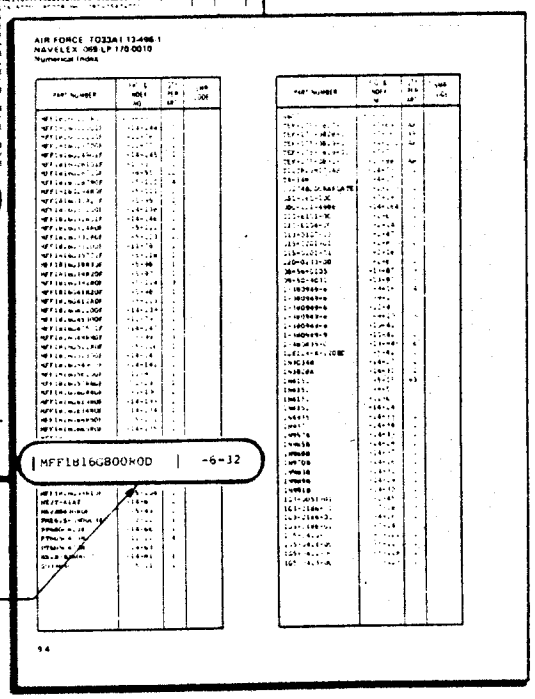

① Find the Part Number in the Numerical Parts List. Note the Figure and Index Number where the part is called out in Parts List.

USEABLE ON CODES

The code letters appearing in this column indicate usability of replacement parts when more than one article is covered in the parts list. Absence of a code letter opposite a part indicates that the part is usable on all articles.

CODE	SERIAL NUMBER EFFECTIVE	DISCONTINUED
A	B010100	B010349
B	B010350	
C	B010100	B010374
D	B010375	
E	B010100	B011099
F	B011100	
G	B010100	B033449
H	B033450	
I	B035180	
J	B036070	
K	B037970	
L	B010100	B039333
M	B039334	
N	B010100	B039567
O	B039568	
P	B010100	B039599
Q	B039600	
R	B010100	B039649
S	B039650	
T	B010100	B039999
U	B040000	
V	B010350	B039999

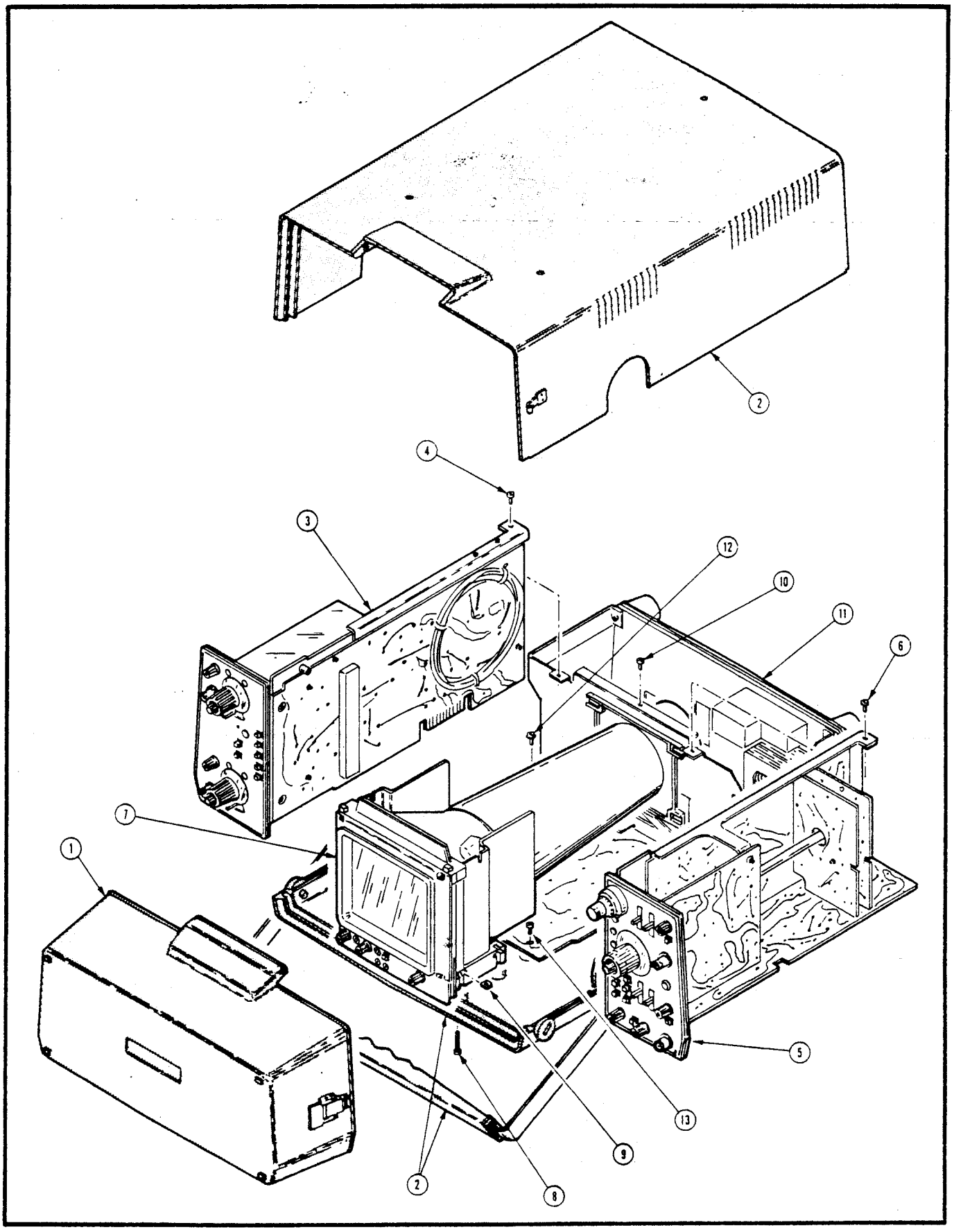

Figure 8-1. Oscilloscope, 465M.

SECTION VIII
ILLUSTRATED PARTS BREAKDOWN
MAINTENANCE PARTS LIST

FIG. & INDEX NO.	PART NUMBER	FSCM	1 2 3 4 5 6 7 DESCRIPTION	UNITS PER ASSY	USABLE ON CODE
8-1-	----- -----	80009	OSCILLOSCOPE,AN/USM-425(V)1.....	1	
-1	----- -----	80009	. ACCESSORY AND COVER ASSEMBLY,See Figure 2... for Breakdown	1	
-2	----- -----	80009	. CABINET AND HANDLE ASSEMBLY,See Figure 3.... for Breakdown	1	
-3	672-0615-00	80009	. CIRCUIT BOARD ASSEMBLY,Vertical Module,..... See Figure 4 for Breakdown	1	
-4	211-0503-00	80009	. SCREW,MACHINE,6-32 X 0.188 inch,pnh,steel... (AP)	2	
-5	672-0613-00	80009	. CIRCUIT BOARD ASSEMBLY,Horizontal Module,... See Figure 7 for Breakdown	1	
-6	211-0503-00	80009	. SCREW,MACHINE,6-32 X 0.188 inch,pnh,steel... (AP)	2	
-7	----- -----	80009	. ELECTRON TUBE ASSEMBLY,See Figure 12 for.... Breakdown	1	
-8	211-0516-00	80009	. SCREW,MACHINE,6-32 X 0.875 inch,pnh,steel... (AP)	4	
-9	220-0419-00	80009	. NUT,PLAIN,SQUARE,6-32 X 0.312 inch,steel.... (AP)	4	
-10	211-0143-00	80009	. SCREW,MACHINE,4-40 X 0.375 inch,pnh,steel... (AP)	1	
-11	----- -----	80009	. MAIN CHASSIS ASSEMBLY,See Figure 13 for..... Breakdown	1	
-12	211-0534-00	80009	. SCREW,ASSEMBLED,WASHER,6-32 X 0.312 inch,pnh steel (AP)	4	
-13	211-0504-00	80009	. SCREW,MACHINE,6-32 X 0.25 inch,pnh,steel.... (AP)	5	

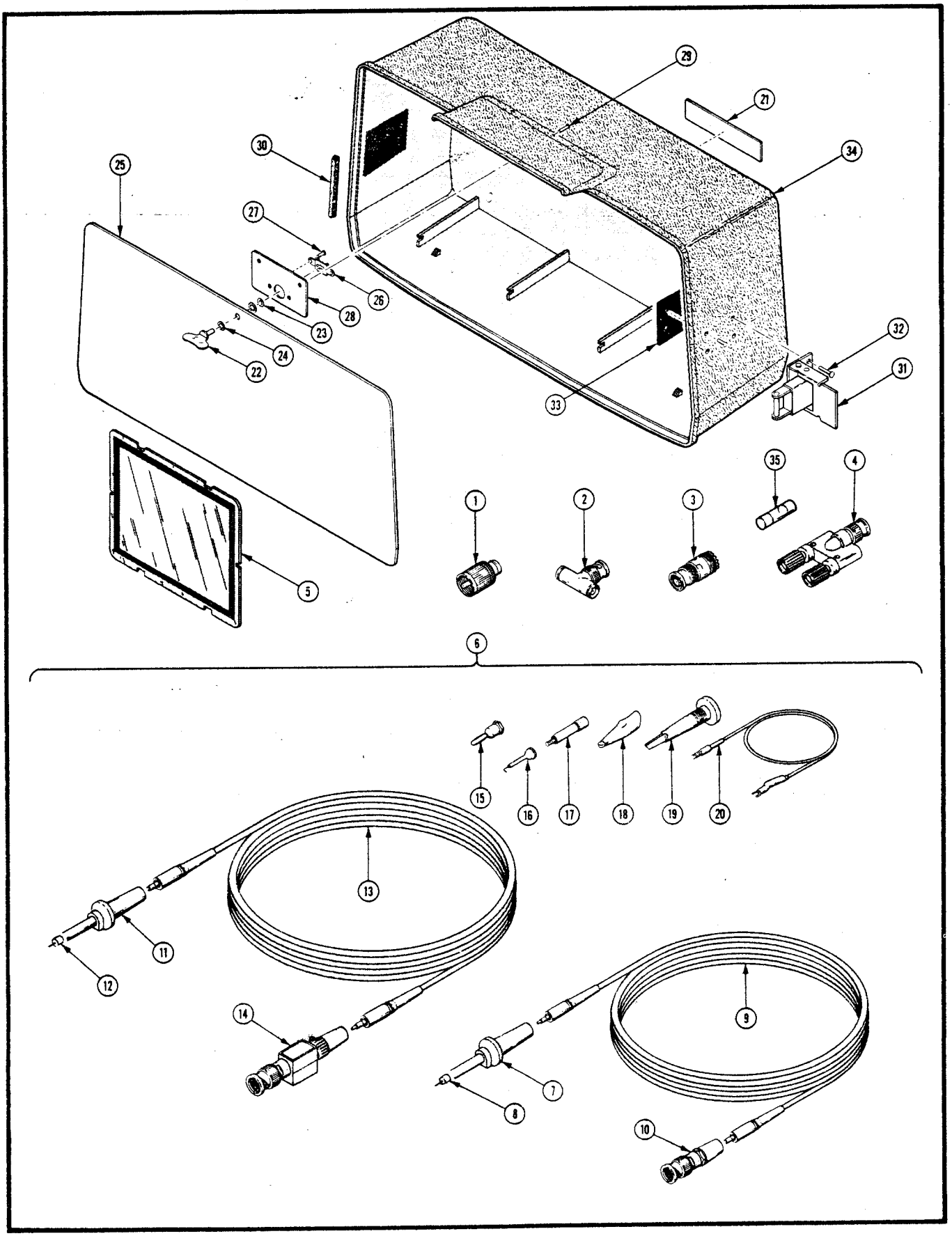

Figure 8-2. Accessories and Cover Assembly.

FIG. & INDEX NO.	PART NUMBER	FSCM	1 2 3 4 5 6 7 DESCRIPTION	UNITS PER ASSY	USABLE ON CODE
8-2-	----- -----	80009	ACCESSORY AND COVER ASSEMBLY,NHA Figure 1-1...	REF	
-1	470-3NT34	95712	. ADAPTER,CONNECTOR,BNC TO UHF (80009 No..... 103-0015-00)	2	
-2	UG274BUDURAPLATE	91737	. ADAPTER,CONNECTOR,BNC TO BNC (80009 No..... 103-0030-00)	1	
-3	29-JP116-1	24931	. ADAPTER,CONNECTOR,BNC male to UHF female.... (80009 No. 103-0032-00)	2	
-4	1296	05276	. ADAPTER,CONNECTOR,BNC male to dual binding.. post (80009 No. 103-0035-00)	1	
-5	337-2122-00	80009	. SHIELD,IMPLOSION,blue.....	1	
	337-2122-01	80009	. SHIELD,IMPLOSION,clear.....	1	
-6	020-0233-00	80009	. ACCESSORY PACKAGE,with probes.....	1	
	010-6101-00	80009	. . LEAD,TEST,1 X 1 meter.....	1	
-7	206-0223-00	80009	. . . PROBE HEAD,1X.....	1	
-8	206-0191-01	80009	. . . . TIP,PROBE,package of 10.....	1	
-9	175-1661-00	80009	. . . CABLE,SPECIAL PURPOSE,ELECTRICAL,39 ohm. coax,40.72 long	1	
-10	28PR224-1	24931	. . . ADAPTER,CABLE END (80009 No..... 103-0189-00)	1	
	010-6104-00	80009	. . LEAD,TEST,10X,1 meter.....	2	
-11	206-0224-00	80009	. . . PROBE HEAD,1 meter,blue.....	1	
-12	206-0191-01	80009	. . . . TIP,PROBE,package of 10.....	1	
-13	175-1661-00	80009	. . . CABLE,SPECIAL PURPOSE,ELECTRICAL,39 ohm. coax,40.72 long	1	
-14	206-0244-00	80009	. . . COMPENSATION BOX,1 meter blue.....	1	
-15	108-753-17	74970	. . PLUG (80009 No. 134-0013-00).....	3	
-16	206-0105-00	80009	. . TIP,PROBE.....	3	
-17	103-0051-01	80009	. . ADAPTER,PROBE TIP.....	3	
-18	344-0046-00	80009	. . CLIP,ELECTRICAL,alligator type,with cover.	3	
-19	013-0107-03	80009	. . TIP,TEST PROD,retainer hook assembly.....	3	
-20	175-0124-01	80009	. . LEAD,ELECTRICAL,probe ground,5 inches..... long	3	
	200-2055-01	80009	. COVER,SCOPE,with hardware.....	1	
-21	334-2661-00	80009	. . PLATE,IDENTIFICATION,marked Tektronix.....	1	
	334-1904-00	80009	. . MARKER,IDENT,marked Tektronix.....	1	
-22	5S10-8	71286	. . FASTENER,PAWL (80009 No. 214-0122-00).....	1	
-23	5S3-1	71286	. . WASHER,RING,0.25 inch OD (80009 No..... 210-0907-00) (AP)	1	
-24	210-1105-00	80009	. . WASHER,FLAT,0.188 ID X 0.375 inch OD,..... nylon (AP)	1	
-25	200-2056-00	80009	. . LID,ACCESSORY COVER.....	1	
-26	5R2-1	71286	. . RECEPTACLE,FASTENER (80009 No..... 214-0127-00)	1	
-27	210-0622-00	80009	. . RIVET,SOLID (AP).....	2	
-28	386-3689-00	80009	. . SUPPORT,COVER.....	1	
-29	210-3068-00	80009	. . RIVET,TUBULAR,0.218 L X 0.125 OD,truss.... head,brass (AP)	2	
-30	348-0524-00	80009	. . GASKET,FRONT PANEL,silicone with PSA back.	1	
-31	CB-83314-CE	98003	. . CATCH,CLAMPING,front cover (80009 No..... 105-0350-00)	2	

FIG. & INDEX NO.	PART NUMBER	FSCM	1 2 3 4 5 6 7 DESCRIPTION	UNITS PER ASSY	USABLE ON CODE
8-2-32	210-3067-00	80009	. . RIVET,TUBULAR,0.281 L X 0.125 OD,truss.... head,brass (AP)	4	
	210-3068-00	80009	. . RIVET,TUBULAR,0.218 L X 0.125 OD,truss.... head,brass (AP)	4	
-33	386-2275-00	80009	. . PLATE,BACKING,cover latch.....	2	
-34	200-2055-00	80009	. . COVER,SCOPE,front.....	1	
-35	AGC 1/2	71400	. FUSE,CARTRIDGE,3AG,0.5A,250V,fast-blow..... (80009 No. 159-0025-00)	1	
	070-2237-01	80009	. MANUAL,TECH, ...	1	

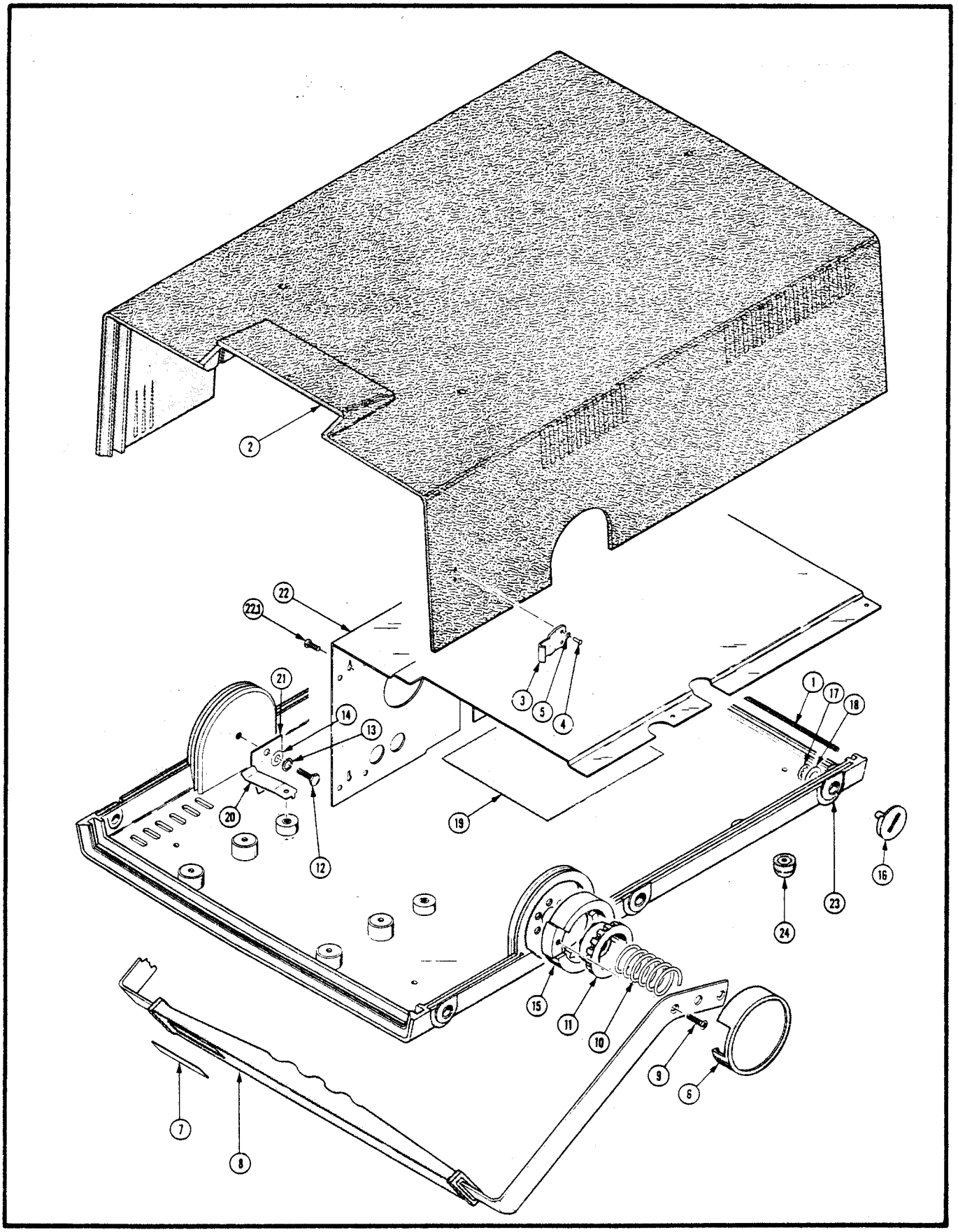

Figure 8-3. Cabinet and Handle Assembly.

FIG. & INDEX NO.	PART NUMBER	FSCM	1 2 3 4 5 6 7 DESCRIPTION	UNITS PER ASSY	USABLE ON CODE
8-3-	----- -----	80009	CABINET AND HANDLE ASSEMBLY,NHA Figure 1-2....	REF	
-1	21-13900	07700	. SHIELD,GASKET,ELECTRICAL,0.125 OD X 2.166... feet long (80009 No. 348-0457-00)	AR	
-2	390-0449-02	80009	. CABINET TOP,SCOPE.....	1	
-3	105-0739-00	80009	. . STRIKE,LATCH.....	2	
-4	210-0761-00	80009	. . RIVET,SOLID,0.312 L X 0.125 OD,oval head,. brass (AP)	2	
-5	210-0994-00	80009	. . WASHER,FLAT,0.125 ID X 0.25 inch OD,steel. (AP)	2	
-6	200-0602-00	80009	. COVER HANDLE,LATCH.....	2	
-7	334-3000-00	80009	. PLATE,IDENTIFICATION,handle.....	1	
-8	367-0233-00	80009	. HANDLE,CARRYING,13.4 inches long.....	1	
-9	213-0227-00	80009	. SCREW,TAPPING,THREAD FORMING,6-32 X 0.50.... degree,flh,steel (AP)	4	
-10	214-0516-00	80009	. SPRING,HELICAL,COMPRESSION,0.959 diameter... X 1.250 inch long	2	
-11	214-0515-02	80009	. INDEX HANDLE,HUB.....	2	
-12	212-0623-00	80009	. SCREW,SELF LOCKING,10-24 X 0.75 inch,hex.... head,steel (AP)	2	
-13	210-0056-00	80009	. WASHER,LOCK,split,0.047 ID X 0.32 inch OD,.. brass (AP)	2	
-14	210-0805-00	80009	. WASHER,FLAT,0.204 ID X 0.438 inch OD,steel.. (AP)	2	
-15	214-1987-00	80009	. INDEX HANDLE,RING.....	2	
-16	105-0677-00	80009	. LATCH,CABINET.....	6	
-17	5115-18-.010	79136	. RING,RETAINING,0.188 inch OD,push on,self... locking (80009 No. 354-0553-00) (AP)	6	
-18	3515-14-11	78189	. WASHER,SPRING TENSION,0.265 ID X 0.5 inch... OD,steel (80009 No. 210-1241-00) (AP)	6	
-19	342-0308-00	80009	. INSULATOR,FILM,bottom cover.....	1	
-20	214-2270-00	80009	. SPRING,GROUND,Vertical Module.....	1	
-21	214-2521-00	80009	. SPRING,GROUND,0.45 wide X 1.093 inch long...	1	
-22	337-2392-00	80009	. SHIELD,ELECTRICAL,EMI.....	1	
-22.1	211-0008-00	80009	. SCREW,MACHINE, 4-40 x 0.25 inch,pnh,steel...		
-23	441-1259-03	80009	. CHASSIS,SCOPE,main.....	1	
-24	348-0080-01	80009	. . FOOT,CABINET,bottom.....	4	

For Service Manuals Contact
MAURITRON TECHNICAL SERVICES
8 Cherry Tree Rd, Chinnor
Oxon OX9 4QY
Tel:- 01844-351694 Fax:- 01844-352554
Email:- enquiries@mauritron.co.uk

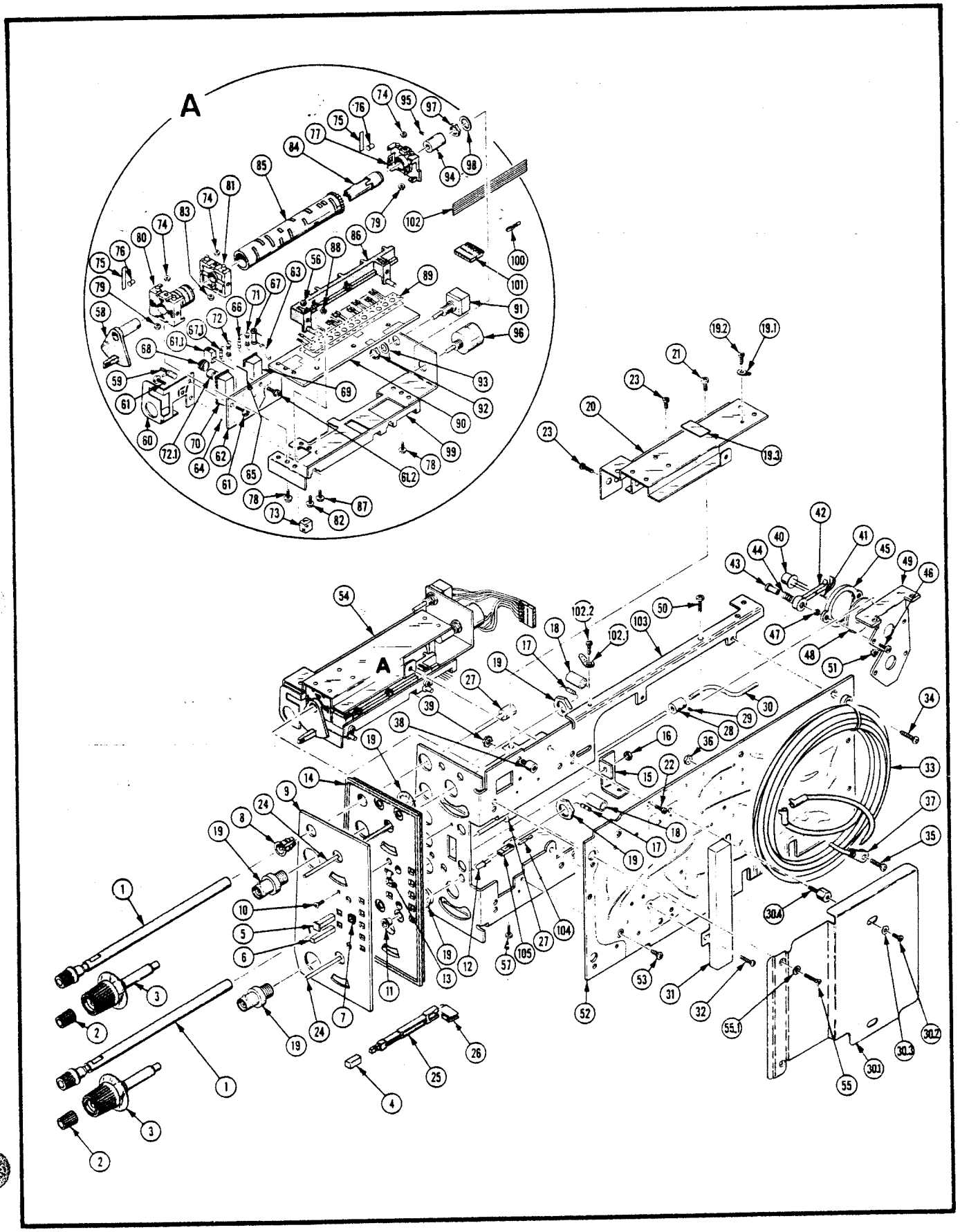

Figure 8-4. Vertical Module Assembly.

FIG. & INDEX NO.	PART NUMBER	FSCM	1 2 3 4 5 6 7 DESCRIPTION	UNITS PER ASSY	USABLE ON CODE
8-4-	672-0615-00	80009	CIRCUIT BOARD ASSEMBLY,Vertical Module,..... NHA Figure 1-3	REF	
-1	384-1350-02	80009	. EXTENSION,SHAFT,0.28 OD X 4.51 inch long,... with knob	2	
-2	366-1031-02	80009	. KNOB,red,variable.....	2	
	213-0153-00	80009	. . SETSCREW,5-40 X 0.125 inch,hex socket..... steel	2	
-3	366-1722-01	80009	. KNOB,gray,with shaft and skirt.....	2	
-4	366-1559-00	80009	. PUSH BUTTON,gray.....	5	
-5	366-1723-00	80009	. KNOB,with shaft,7.035 inch long.....	1	
-6	366-1512-00	80009	. PUSH BUTTON,gray,0.18 square X 0.83 inch.... long	1	
-7	426-1072-00	80009	. FRAME,PUSH BUTTON,plastic.....	7	
-8	358-0550-00	80009	. BUSHING,SHAFT,0.15 ID X 0.3 inch OD,plastic.	2	
-9	333-2277-00	80009	. PANEL,FRONT,Vertical Module.....	1	
-10	213-0113-00	80009	. SCREW,TAPPING,THREAD FORMING,2-32 X 0.312... inch,pnh,steel (AP)	2	
-11	352-0477-00	80009	. HOLDER,LIGHT EMITTING DIODE.....	2	
-12	FLV160	07263	. LAMP,LIGHT EMITTING DIODE,red,2 volt,100 ma. (80009 No. 150-1001-02)	2	
-13	214-2329-00	80009	. SPRING,GROUND,front panel.....	1	
-14	342-0366-00	80009	. INSULATOR,PLATE,front panel,vertical.....	1	
-15	407-1909-00	80009	. BRACKET,ATTENUATOR,grounding.....	2	
-16	210-0586-00	80009	. NUT,PLAIN,EXTENDED WASHER,4-40 X 0.25 inch,. steel (AP)	2	
	211-0007-00	80009	. SCREW,MACHINE,4-40 X 0.188 inch,pnh,steel... (AP)	2	
-17	CB5105	01121	. RESISTOR,FIXED COMPOSITION,51 ohm,5%,0.25W.. (80009 No. 315-0510-00)	2	
-18	285-1132-00	80009	. CAPACITOR,FIXED PLASTIC,0.019uF,10%,600V....	2	
-19	9663-1 NT-34	36619	. CONNECTOR,RECEPTACLE,BNC,female,w/hardware (80009 No. 131-0126-00)		
-19.1	210-0261-00	80009	. TERMINAL,LUG,0.14 ID,plain,brass.....	1	B
-19.2	213-0138-00	80009	. SCREW,TAPPING,THREAD FORMING,4-24 X 0.188.... inch,type B,pnh,steel (AP)	1	B
-19.3	334-3448-00	80009	. MARKER,IDENT,marked NOTICE.....	1	J
-20	200-2052-00	80009	. COVER,ATTENUATOR.....	2	
-21	211-0008-00	80009	. SCREW,MACHINE,4-40 X 0.25 inch,pnh,steel.... (AP)	4	
-22	211-0097-00	80009	. SCREW,MACHINE,4-40 X 0.312 inch,pnh,steel... (AP)	2	
-23	211-0007-00	80009	. SCREW,MACHINE,4-40 X 0.188 inch,pnh,steel... (AP)	2	
-24	384-1056-00	80009	. EXTENSION SHAFT,0.125 OD X 6.58 inch long...	2	
	384-1389-01	80009	. EXTENSION SHAFT,1.905 long,offset,plastic...	1	
-25	384-1099-00	80009	. . EXTENSION SHAFT,push button,1.54 inch..... long	1	
-26	103-0186-02	80009	. . ADAPTER,EXTENSION SHAFT,push switch.....	1	
-27	384-1456-00	80009	. EXTENSION SHAFT,0.312 OD X 1.5 inch long,... aluminum	2	
-28	376-0029-00	80009	. COUPLING,SHAFT,RIGID,0.128 ID X 0.312 OD X.. 0.5 inch long	1	
-29	213-0075-00	80009	. . SETSCREW,4-40 X 0.094 inch,hex soc,steel..	2	

FIG. & INDEX NO.	PART NUMBER	FSCM	1 2 3 4 5 6 7 DESCRIPTION	UNITS PER ASSY	USABLE ON CODE
8-4-30	384-1457-00	80009	. EXTENSION SHAFT,0.125 OD X 8.8 inch long,... aluminum	1	
-30.1	337-2497-00	80009	. SHIELD,ELECTRICAL,circuit board.....	1	
-30.2	211-0008-00	80009	. SCREW,MACHINE:4-40 X 0.250,inch,pnh,steel... (AP)	1	
-30.3	210-0994-00	80009	. WASHER,FLAT,0.125 ID X 0.022 inch thick,.... steel (AP)	2	
-30.4	129-0677-00	80009	. SPACER,POST,2.28 inch long,brass,0.25 hex... (AP)	2	
-31	337-2234-00	80009	. SHIELD,ELECTRICAL,preamplifier input.....	1	
-32	211-0012-00	80009	. SCREW,MACHINE,4-40 X 0.375 inch,pnh,steel... (AP)	3	
-33	119-0860-00	80009	. DELAY LINE,120NS,150 ohm.....	1	
-34	213-0183-00	80009	. SCREW,TAPPING,THREAD FORMING,6-32 X 0.25.... inch,pnh,steel (AP)	2	
-35	211-0510-00	80009	. SCREW,MACHINE,6-32 X 0.312 inch,pnh,steel... (AP)	1	
-36	3038-0228-402	73743	. NUT,PLAIN,HEXAGON,6-32 X 0.25 inch,brass.... (AP) (80009 No. 210-0409-00)	1	
-37	T4-34M	59730	. STRAP,ELECTRICAL COMPONENT,tie down,5.0..... inch long (80009 No. 346-0121-00)	3	
-38	129-0575-00	80009	. SPACER,POST,0.312 inch long with 6-32..... threads,brass	1	
-39	210-0457-00	80009	. NUT,PLAIN,EXTENDED WASHER,6-32 X 0.312 inch, steel (AP)	1	
-40	151-0446-00	80009	. TRANSISTOR,silicon,NPN.....	2	
-41	210-0627-00	80009	. RIVET,SOLID,0.042 OD X 0.25 inch long,RDH...	2	
-42	343-0097-00	80009	. RETAINER,TRANSISTOR,heat sink.....	2	
-43	210-0599-00	80009	. NUT,SLEEVE,4-40 X 0.391 inch long (AP).....	4	
-44	214-0368-00	80009	. SPRING,HELICAL COMPRESSION,0.24 OD X 0.438.. inch long	2	
-45	352-0262-00	80009	. RETAINER,TRANSISTOR.....	2	
-46	211-0012-00	80009	. SCREW,MACHINE,4-40 X 0.375 inch,pnh,steel... (AP)	4	
-47	2X12161-402	73743	. NUT,PLAIN,HEXAGON,4-40 X 0.188 inch,brass... (AP) (80009 No. 210-0406-00)	4	
-48	214-1138-00	80009	. HEAT SINK,ELECTRICAL,transistor,1 inch OD,.. aluminum	2	
-49	407-1922-00	80009	. BRACKET,HEAT SINK,transistor,aluminum.....	1	
-50	211-0507-00	80009	. SCREW,MACHINE,6-32 X 0.312 inch,pnh,steel... (AP)	2	
-51	210-0457-00	80009	. NUT,PLAIN,EXTENDED WASHER,6-32 X 0.312 inch, steel (AP)	2	
-52	670-4849-00	80009	. CIRCUIT BOARD ASSEMBLY,Vertical,See Figure 5 for Breakdown	1	
-53	213-0146-00	80009	. SCREW,TAPPING,THREAD FORMING,6-20 X 0.313.. inch,pnh,steel (AP)	2	
-54	672-0616-00	80009	. CIRCUIT BOARD ASSEMBLY,Attenuator,Channel 1.	1	
	672-0617-00	80009	. CIRCUIT BOARD ASSEMBLY,Attenuator,Channel 2.	1	
-55	211-0114-00	80009	. SCREW,MACHINE,4-40 X 0.438,inch,flh,steel... (AP)	1	
-55.1	210-0994-00	80009	. WASHER,FLAT,0.125 ID X 0.022 inch thick,.... steel	1	F

FIG. & INDEX NO.	PART NUMBER	FSCM	1 2 3 4 5 6 7 DESCRIPTION	UNITS PER ASSY	USABLE ON CODE
8-4-56	2X12161-402	73743	. NUT,PLAIN,HEXAGON,4-40 X 0.188 inch,brass... (AP) (80009 No. 210-0406-00)	2	
-57	211-0008-00	80009	. SCREW,MACHINE,4-40 X 0.25 inch,pnh,steel.... (AP)	2	
-58	214-2519-00	80009	. . LEVER,SWITCH,AC-ground-DC.....	1	
-59	2222-801-96138	80031	. . CAPACITOR,VARIABLE,CERAMIC DIELECTRIC,.... 0.5-3pF,400V (80009 No. 281-0214-00)	1	
-60	441-1364-00	80009	. . CHASSIS,ATTENUATOR BOARD.....	1	
-61	211-0121-00	80009	. . SCREW,ASSEMBLED WASHER,4-40 X 0.438 inch,. pnh,brass (AP)	2	
-61.1	220-0810-00	80009	. . NUT BLOCK,0.281 SQ X 0.156 inch,4-40 ..... thread	2	
-61.2	211-0116-00	80009	. . SCREW,ASSEMBLY,WASHER,4-40 X 0.312 inch,.. double sems,poz (AP)	2	
-62	670-4852-00	80009	. . CIRCUIT BOARD ASSEMBLY,Attenuator.....	1	
	211-0121-00	80009	. . SCREW,ASSEMBLED WASHER,4-40 X 0.438 inch,. pnh,brass (AP)	1	
-63	131-2028-00	80009	. . . CONTACT,ELECTRICAL,grounding.....	2	
-64	75060-012	22526	. . . SOCKET,PIN TERMINAL,0.188 inch long..... (80009 No. 136-0252-07)	12	
-65	337-2387-00	80009	. . . SHIELD,ELECTRICAL,Attenuator.....	1	
-66	8015-D-C0G709M	72982	. . . CAPACITOR,FIXED,CERAMIC DIELECTRIC,7pF, 20%,100V (80009 No. 281-0808-00)	1	
-67	301-000C0J0339C	72982	. . . CAPACITOR,FIXED,CERAMIC DIELECTRIC,..... 3.3pF,+/-0.25pF,500V (80009 No. 281-0534-00)	1	
-67.1	390-049X5P0220K	72982	. . . CAPACITOR,FIXED,CERAMIC DIELECTRIC,22pF, 10%,100V (8009 No. 281-0759-00)	1	
-68	91A-100R0M	73138	. . . RESISTOR,VARIABLE,NONWIRE WOUND,100 ohm, 20%,0.50W (80009 No. 311-1567-00)	1	
-69	307-1013-04	80009	. . . ATTENUATOR,FIXED,10X.....	1	
-70	307-1014-04	80009	. . . ATTENUATOR,FIXED,100X.....	1	
-71	CB6815	01121	. . . RESISTOR,FIXED,COMPOSITION,680 ohm,5%,.. 0.25W (80009 No. 315-0681-00)	1	
-72	CB3305	01121	. . . RESISTOR,FIXED,COMPOSITION,33 ohm,5%,... 0.25W (80009 No. 315-0330-00)	1	
-72.1	3329P-L58-101	32997	. . . RESISTOR,VARIABLE,NONWIRE,WOUND,TRIMMER. 100 ohm,0.5W (80009 No. 311-1259-00)	1	
-73	220-0455-00	80009	. . NUT,BLOCK,0.281 inch square,three 4-40.... thru threads	2	
	211-0008-00	80009	. . SCREW,MACHINE,4-40 X 0.25 inch,pnh,steel.. (AP)	2	
-74	2X12161-402	73743	. . NUT,PLAIN,HEXAGON,4-40 X 0.188 inch,brass. (80009 No. 210-0406-00)	3	
-75	214-1126-01	80009	. . SPRING,FLAT,green colored.....	4	
-76	214-1752-00	80009	. . ROLLER,DETENT.....	4	
-77	401-0370-00	80009	. . BEARING,CAM SWTICH,front and rear.....	2	
-78	211-0116-00	80009	. . SCREW,ASSEMBLED WASHER,4-40 X 0.312 inch,. pnh,brass (AP)	2	
-79	2X12161-402	73743	. . NUT,PLAIN,HEXAGON,4-40 X 0.188 inch,brass. (AP) (80009 No. 210-0406-00)	2	
-80	105-0737-00	80009	. . ACTUATOR,CAM SWTICH,0.6 inch OD,AC-ground-DC	1	
-81	401-0369-00	80009	. . BEARING,CAM SWITCH,center.....	1	

FIG. & INDEX NO.	PART NUMBER	FSCM	1 2 3 4 5 6 7 DESCRIPTION	UNITS PER ASSY	USABLE ON CODE
8-4-82	211-0116-00	80009	. . SCREW,ASSEMBLED WASHER,4-40 X 0.312 inch,. pnh,brass (AP)	1	
-83	2X12161-402	73743	. . NUT,PLAIN,HEXAGON,4-40 X 0.188 inch,brass. (AP) (80009 No. 210-0406-00)	1	
-84	376-0182-00	80009	. . COUPLING,SHAFT,RIGID,for 0.192 and 0.25... diameter shaft	1	
-85	105-0738-00	80009	. . ACTUATOR,CAM SWITCH,Attenuator.....	1	
-86	343-0681-00	80009	. . RETAINER,CONTACT STRIP.....	1	
-87	211-0116-00	80009	. . SCREW,ASSEMBLED WASHER,4-40 X 0.312 inch,. pnh,brass (AP)	3	
-88	2X12161-402	73743	. . NUT,PLAIN,HEXAGON,4-40 X 0.188 inch,brass. (AP) (80009 No. 210-0406-00)	3	
-89	131-1758-05	80009	. . CONTACT ASSEMBLY,ELECTRICAL,10 contact....	1	
	131-1758-06	80009	. . CONTACT ASSEMBLY,ELECTRICAL,9 contact.....	1	
-90	670-4850-00	80009	. . CIRCUIT BOARD ASSEMBLY,Cam Switch,Channel. 1,See Figure 6 for Breakdown	1	
	670-4850-01	80009	. . CIRCUIT BOARD ASSEMBLY,Cam Switch,Channel. 2,See Figure 6 for Breakdown	1	
-91	388-CM40915	12697	. . RESISTOR,VARIABLE,NONWIRE WOUND,5K ohm,... 10%,0.5W (80009 No. 311-1783-00)	1	
-92	2X20224-402	73743	. . NUT,PLAIN,HEXAGON,0.25-32 X 0.312 inch,... brass (AP) (80009 No. 210-0583-00)	1	
-93	1214-05-00-0541C	78189	. . WASHER,LOCK,internal,0.26 ID X 0.40 inch.. OD,steel (AP) (80009 No. 210-0046-00)	1	
-94	376-0029-00	80009	. . COUPLING,SHAFT,RIGID,0.128 ID X 0.312 OD.. X 0.5 inch long	1	
-95	213-0075-00	80009	. . . SETSCREW,4-40 x 0.094 inch,hex socket,.. steel	2	
-96	381CM40934	12697	. . RESISTOR,VARIABLE,NONWIRE WOUND,5K ohm,... 20%,1W,DPST Switch (80009 No. 311-1792-00)	1	
-97	2X20224-402	73734	. . NUT,PLAIN,HEXAGON,0.25-32 X 0.312 inch,... brass (AP) (80009 No. 210-0583-00)	1	
-98	1214-05-00-0541C	78189	. . WASHER,LOCK,internal,0.26 ID X 0.40 inch.. OD,steel (AP) (80009 No. 210-0046-00)	1	
-99	441-1365-00	80009	. . CHASSIS,SCOPE,Attenuator.....	1	
	198-2581-00	80009	. . WIRE SET,ELECTRICAL,Attenuator.....	1	
-100	47439	22526	. . . CONTACT,ELECTRICAL,0.48 inch long,22-26. AWG wire (80009 No. 131-0707-00)	6	
-101	352-0164-00	80009	. . . CONNECTOR BODY,PLUG,ELECTRICAL,6 wire... black	1	
-102	TEK-175-0829-00	83501	. . . WIRE,ELECTRICAL,6 wire ribbon,0.313 foot long (80009 No. 175-0829-00)	AR	
-102.1	210-0202-00	80009	. . . TERMINAL,LUG,0.146 ID,locking,bronze.... tinned	1	B
-102.2	213-0138-00	80009	. . . SCREW,TAPPING,THREAD FORMING,4-24..... X 1.188 inch,type B,pnh,steel (AP)	1	B
-103	441-1261-03	80009	. CHASSIS,SCOPE,Main,Vertical Module.....	1	
	198-3416-00	80009	. WIRE SET,ELECTRICAL,Vertical Module.....	2	
-104	530584	00779	. . TERMINAL,QUICK DISC,26 AWG,COPPER nickel.. (80009 No. 131-2084-00)	8	
-105	352-0169-00	80009	. . CONNECTOR,BODY,PLUG,ELECTRICAL,2 wire..... black	4	

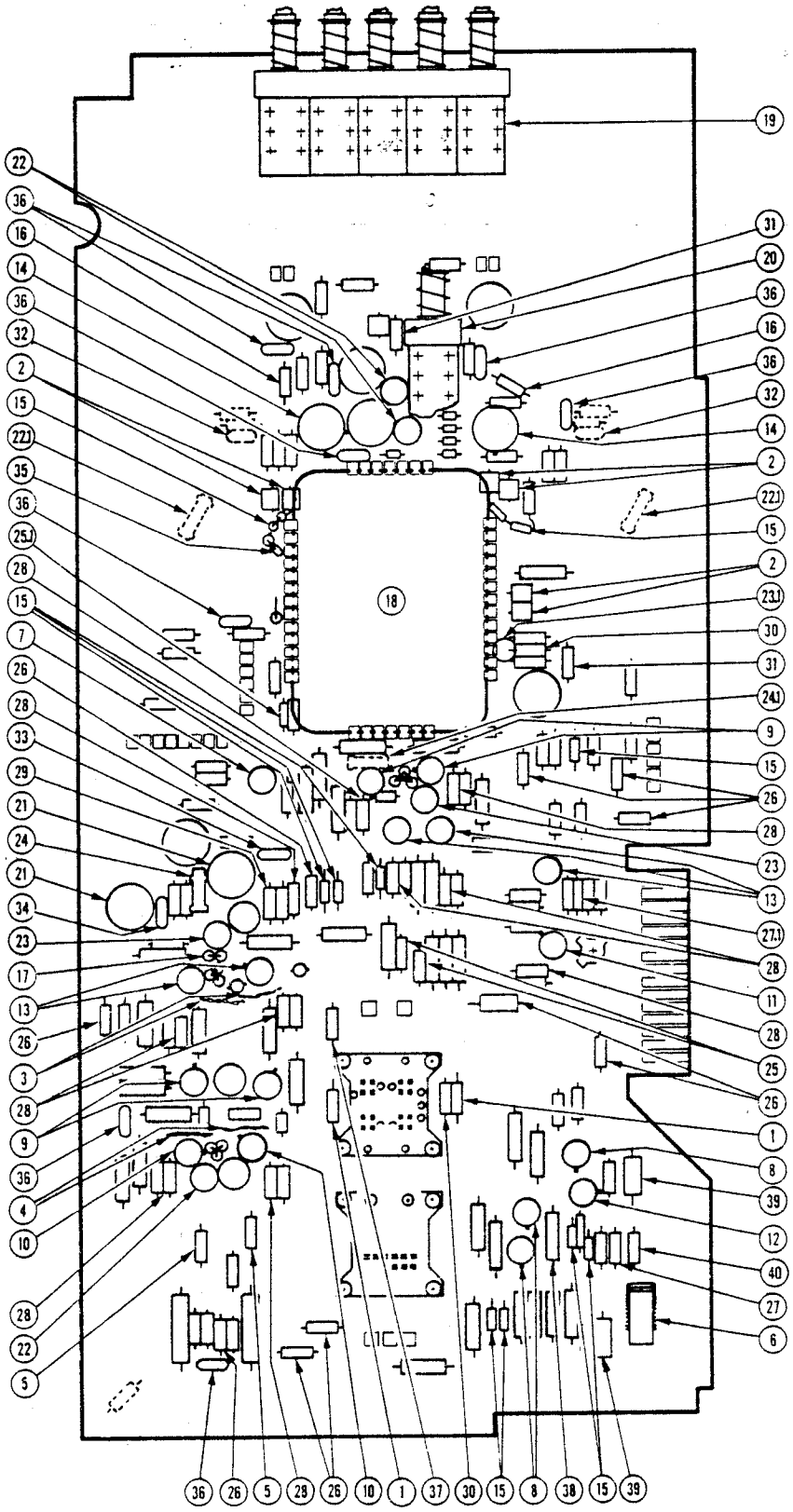

Figure 8-5. A5 Circuit Board Assembly, Vertical (sheet 1 of 4).

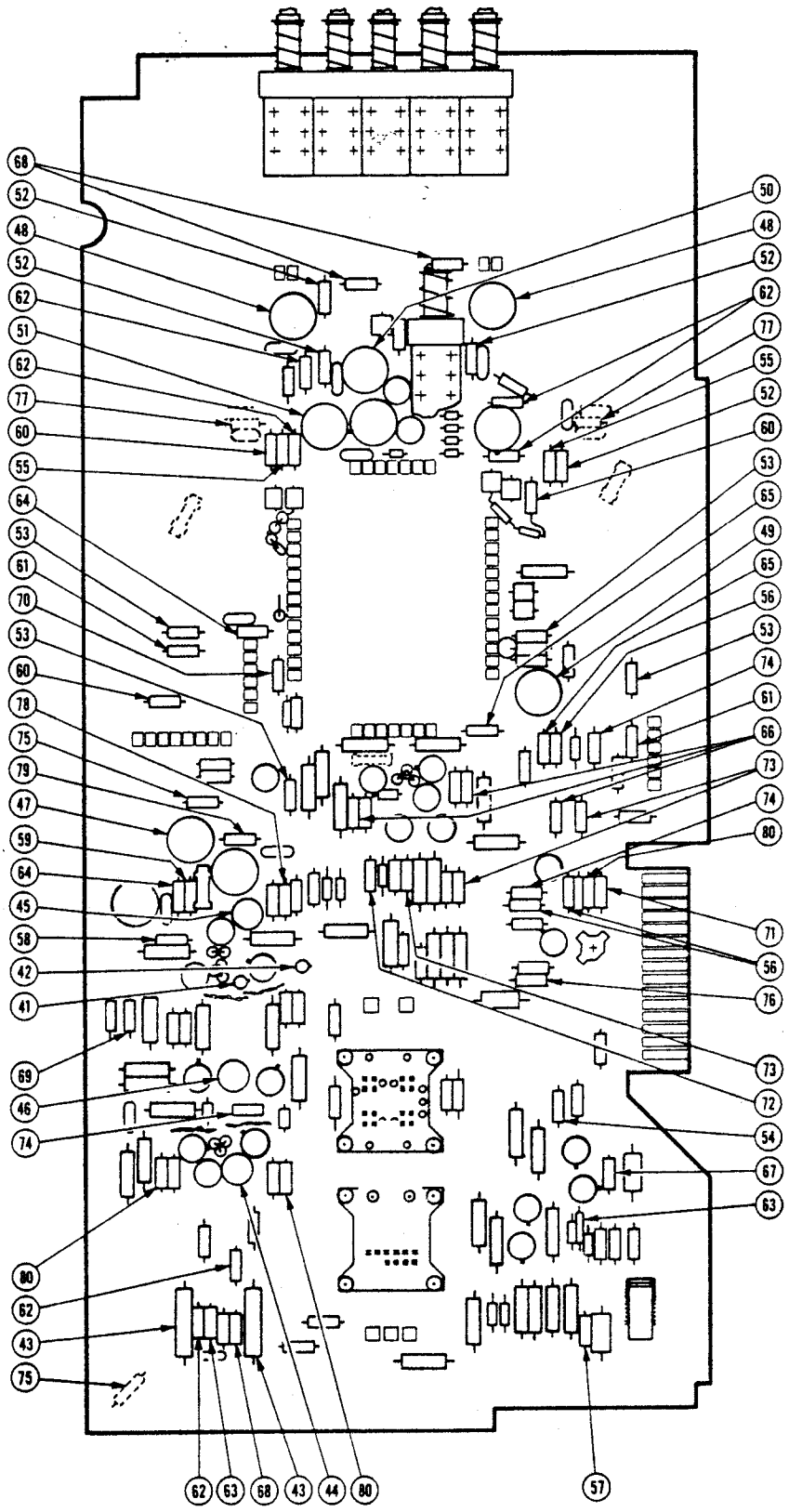

Figure 8-5. A5 Circuit Board Assembly, Vertical (sheet 2 of 4).

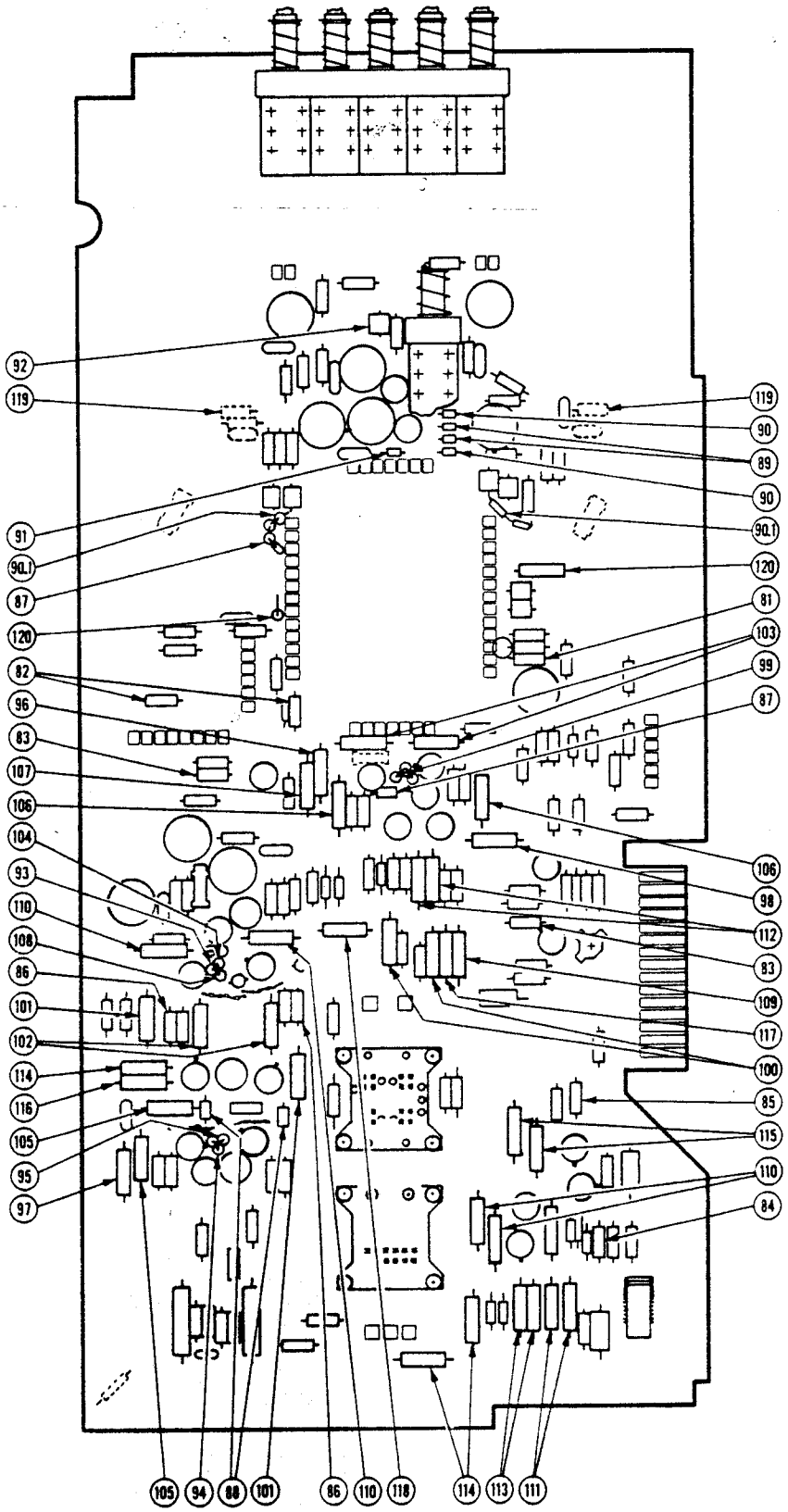

Figure 8-5. A5 Circuit Board Assembly, Vertical (sheet 3 of 4).

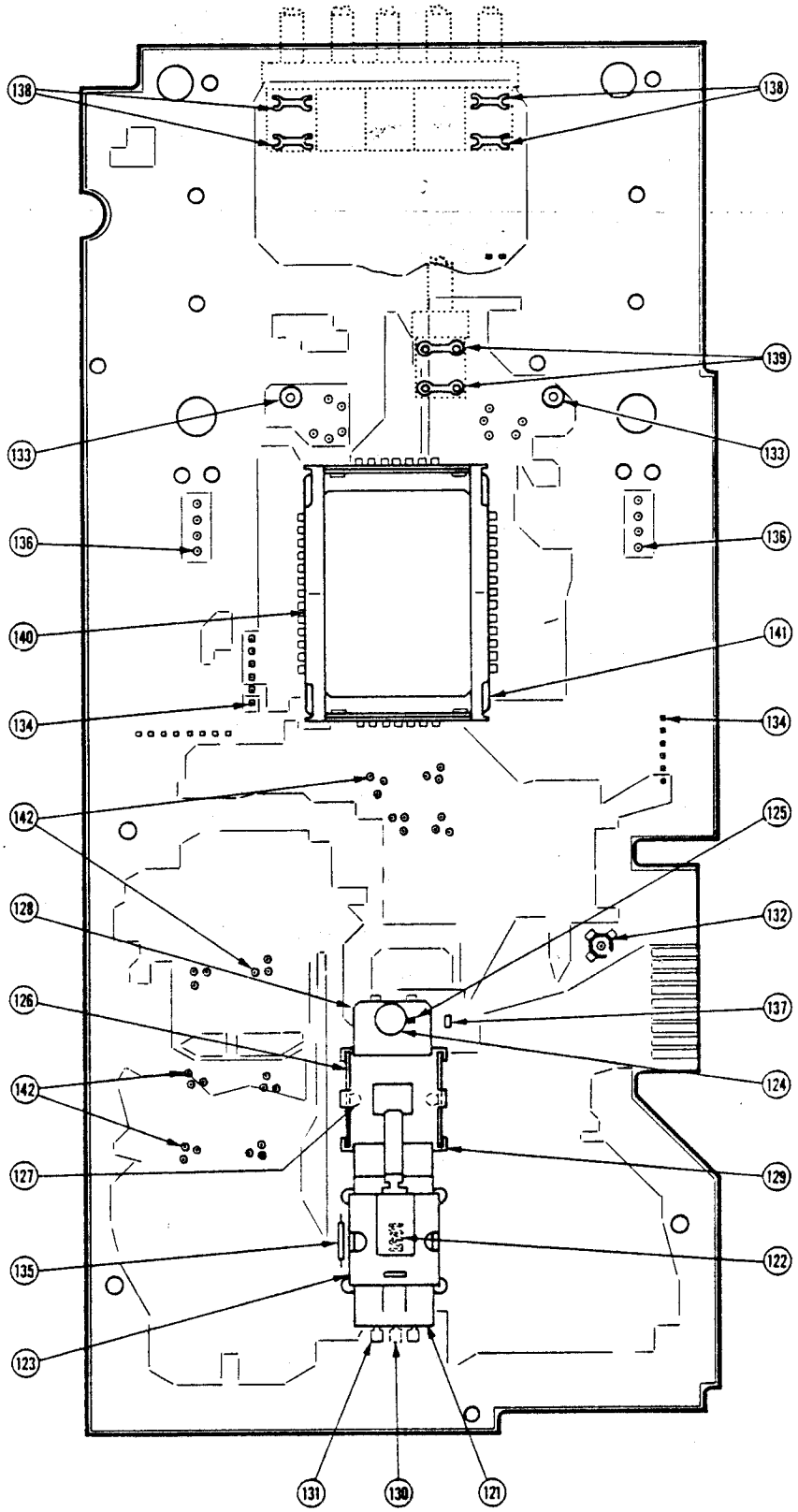

Figure 8-5. A5 Circuit Board Assembly, Vertical (sheet 4 of 4).

FIG. & INDEX NO.	PART NUMBER	FSCM	1 2 3 4 5 6 7 DESCRIPTION	UNITS PER ASSY	USABLE ON CODE
8-5-	670-4849-00	80009	CIRCUIT BOARD ASSEMBLY,Vertical,NHA Figure.... 4-52	REF	
-1	108-0262-00	80009	. COIL,RADIO,FREQUENCY,510NH.....	2	
-2	57-0180-7D-500B	78488	. SHIELDING BEAD,0.6UH (80009 No. 276-0507-00)	6	
-3	108-0570-00	80009	. COIL,RADIO FREQUENCY,fixed,75NH,airwound....	2	
-4	120-1094-00	80009	. TRANSFORMER,RADIO FREQUENCY,68NH,2 turns,... 27 AWG	2	
-5	108-0328-00	80009	. COIL,RADIO FREQUENCY,0.3UH.....	2	
-6	120-0384-00	80009	. TRANSFORMER,TOROID,2 turns.....	1	
-7	151-0127-00	80009	. TRANSISTOR,silicon,NPN.....	1	
-8	151-0190-00	80009	. TRANSISTOR,silicon,NPN.....	3	
-9	151-0434-00	80009	. TRANSISTOR,silicon,PNP.....	4	
-10	151-0447-00	80009	. TRANSISTOR,silicon,NPN.....	2	
-11	S039650	07263	. TRANSISTOR,silicon,PNP (80009 No..... 151-0458-00)	1	
-12	2N3947	07263	. TRANSISTOR,silicon,NPN (80009 No..... 151-0460-00)	1	
-13	151-0472-00	80009	. TRANSISTOR,silicon,NPN.....	5	
-14	151-1090-02	80009	. TRANSISTOR,silicon,NPN.....	2	
-15	1N4152R	01295	. SEMICONDUCTOR DEVICE,silicon,30V,150MA..... (80009 No. 152-0141-02)	10	
-16	152-0246-00	80009	. SEMICONDUCTOR DEVICE,silicon,400PIV,200MA...	2	
-17	152-0269-00	80009	. SEMICONDUCTOR DEVICE,silicon,VVC,33pF,20%,.. 4V	2	
-18	155-0155-00	80009	. MICROCIRCUIT,LINEAR,vertical preamplifier...	1	
-19	260-1424-01	80009	. SWITCH,PUSH,5 station,2 pole,interlock.....	1	
-20	260-1445-01	80009	. SWITCH,PUSH,1 button.....	1	
-21	281-0205-00	80009	. CAPACITOR,VARIABLE,PLASTIC,5.5-65pF,100V....	2	
-22	513-001-A-2.0-10	72982	. CAPACITOR,VARIABLE,CERAMIC DIELECTRIC,..... 2-10pf,100V (80009 No. 281-0221-00)	3	T
-22	513-001-A-2.0-10	72982	. CAPACITOR,VARIABLE,CERAMIC DIELECTRIC,..... 2-10pF,100V (80009 No. 281-0221-00)	2	U
-22	513-001 5-30	72982	. CAPACITOR,VARIABLE,CERAMIC DIELECTRIC,..... 5-35pF,+2-25%,100V (80009 No. 281-0219-00)	1	U
-22.1	301-000C0J0279C[1]	72982	. CAPACITOR,FIXED,CERAMIC DIELECTRIC,2.7pF 10% 500V (8009 No. 281-0547-00)	2	B
-23	513-001-A-2.0-10	72982	. CAPACITOR,VARIABLE,CERAMIC DIELECTRIC,..... 2-10pF,100V (80009 No. 281-0221-00)	2	T
-23	513-001-A-2.0-10	72982	. CAPACITOR,VARIABLE,CERAMIC DIELECTRIC,..... 2-10pF,100V (80009 No. 281-0221-00)	1	T
-23	518-000A5-15	72982	. CAPACITOR,VARIABLE,CERAMIC DIELECTRIC,..... 5-15pF,350V (80009 No. 281-0161-00)	1	U
-23.1	518-00A2.5-9	72982	. CAPACITOR,FIXED,CERAMIC DIELECTRIC,2.5-9pF,. 100V (80009 No. 281-0122-00)	1	
-24	308-000C0G0330J	72982	. CAPACITOR,FIXED,CERAMIC DIELECTRIC,33pF,5%,. 600V (80009 No. 281-0629-00)	1	A
-24	308-000C0G0350J	72982	. CAPACITOR,FIXED,CERAMIC,DIELECTRIC,35pF,5%,. 500V, (80009 No. 281-0625-00)	1	B
-24.1	374-001C0H0479D	72982	. CAPACITOR,FIXED,CERAMIC DIELECTRIC,4.7pF,... +/-0.1pF,200V, (80009 No. 281-0618-00)	1	T
-25	390-049X5P0220K	72982	. CAPACITOR,FIXED,CERAMIC DIELECTRIC,22pF,10%, 100V (80009 No. 281-0759-00)	2	
-25.1	8035D9AADC0G270M	72982	. CAPACITOR,FIXED,CERAMIC DIELECTRIC,27pF,20% 100V (80009 No. 281-0762-00)	2	
-26	8005D9AABZ5U104M	72982	. CAPACITOR,FIXED,CERAMIC DIELECTRIC,0.1UF,... 20%,50V (80009 No. 281-0775-00)	10	

See end of Section for footnote.

FIG. & INDEX NO.	PART NUMBER	FSCM	1 2 3 4 5 6 7 DESCRIPTION	UNITS PER ASSY	USABLE ON CODE
8-5-27	390049X5P0680K	72982	. CAPACITOR,FIXED,CERAMIC DIELECTRIC,68pF,10%, 100V (80009 No. 281-0785-00)	1	
-27.1	390049X5P0151K	72982	. CAPACITOR,FIXED,CERAMIC DIELECTRIC,150pF,10% 100V (80009 No. 281-0786-00)	1	T
-27.1	8005H9AADW5R471K	72982	. CAPACITOR,FIXED,CERAMIC DIELECTRIC,470pF... 10%,100V (80009 No. 281-0788-00)	1	U
-28	8005H9AADW5R471K	72982	. CAPACITOR,FIXED,CERAMIC DIELECTRIC,470pF,... 10%,100V (80009 No. 281-0788-00)	10	T
-28	G1710-050NP0471K	72982	. CAPACITOR,FIXED,CERAMIC DIELECTRIC,470pF, 10%,50V (80009 No. 281-0823-00)	10	U
-29	390049X5P0820K	72982	. CAPACITOR,FIXED,CERAMIC DIELECTRIC,82pF,10%, 100V (80009 No. 281-0792-00)	1	
-30	8005-D-C0G-150K	72982	. CAPACITOR,FIXED,CERAMIC DIELECTRIC,15pF,10%, 100V (80009 No. 281-0797-00)	2	
-31	8005-100-C0G201J	72982	. CAPACITOR,FIXED,CERAMIC DIELECTRIC,200pF,5%, 100V (80009 No. 281-0809-00)	2	
-32	8131N300Z5U103P	72982	. CAPACITOR,FIXED,CERAMIC DIELECTRIC,0.01UF,.. +100-0%,250V (80009 No. 283-0005-00)	2	
-33	273C20	56289	. CAPACITOR,FIXED,CERAMIC DIELECTRIC,0.05UF,.. +100-20%,50V (80009 No. 283-0010-00)	1	
-34	8131N145 A 332J	72982	. CAPACITOR,FIXED,CERAMIC DIELECTRIC,0.0033UF, 5%,100V (80009 No. 283-0051-00)	1	
-35	8111A208E102Z	72982	. CAPACITOR,FIXED,CERAMIC DIELECTRIC,1000pF,.. +100-0%,200V (80009 No. 283-0156-00)	1	
-36	8131N145 E 104Z	72982	. CAPACITOR,FIXED,CERAMIC DIELECTRIC,0.1UF,... +80-20%,100V (80009 No. 283-0178-00)	7	C
-36	8131N145 E 104Z	72982	. CAPACITOR,FIXED,CERAMIC DIELECTRIC,0.1uF,... +80-20%,100V (80009 No. 283-0178-00)	8	D
-36	8131N145 E 104Z	72982	. CAPACITOR,FIXED,CERAMIC DIELECTRIC,0.1uF,... +80-20%,100V (80009 No. 283-0178-00)	6	U
-36	NDB475M10S	51984	. CAPACITOR,FIXED,ELECTROLYTIC,4.7uF,..... 20%,100V (80009 No. 290-0524-00)	2	U
-37	D151E111F0	00853	. CAPACITOR,FIXED,MICA DIELECTRIC,110pF,1%,... 100V (80009 No. 283-0630-00)	1	
-38	410P103	56289	. CAPACITOR,FIXED,PLASTIC,0.0047UF,5%,100V.... (80009 No. 285-0643-00)	1	
-39	162D275X9015CD2	56289	. CAPACITOR,FIXED,ELECTROLYTIC,2.7UF,15V..... (80009 No. 290-0263-00)	2	
-40	CB47G5	01121	. RESISTOR,FIXED,COMPOSITION,4.7 OHM,5%,0.25W. (80009 No. 307-0106-00)	1	
-41	2D1596	50157	. RESISTOR,THERMAL,1k ohm,10% (80009 No..... 307-0127-00)	1	
-42	1DE104-K-220EC	15454	. RESISTOR,THERMAL,100k ohm,10%,4MW (80009 No. 307-0181-00)	1	
-43	NS2BB430R0F	91637	. RESISTOR,FIXED,WIRE WOUND,430 ohm,1%,3W..... (80009 No. 308-0796-00)	2	
-44	3329P-L58-500	32997	. RESISTOR,VARIABLE,NONWORE WOUND,50 ohm,10%,. 0.50W (80009 No. 311-1258-00)	1	
-45	3329P-L58-101	32997	. RESISTOR,VARIABLE,NONWIRE WOUND,100 ohm,10%, 0.50W (80009 No. 311-1259-00)	1	
-46	3329P-L58-252	32997	. RESISTOR,VARIABLE,NONWIRE WOUND,2.5k ohm,... 10%,0.50W (80009 No. 311-1266-00)	1	
-47	91A-20001M	73138	. RESISTOR,VARIABLE,NONWIRE WOUND,20k ohm,20%, 0.50W (80009 No. 311-1558-00)	1	
-48	91A-10001M	73138	. RESISTOR,VARIABLE,NONWIRE WOUND,10k ohm,20%, 0.50W (80009 No. 311-1559-00)	2	

FIG. & INDEX NO.	PART NUMBER	FSCM	1 2 3 4 5 6 7 DESCRIPTION	UNITS PER ASSY	USABLE ON CODE
8-5-49	91A-50000M	73138	. RESISTOR,VARIABLE,NONWIRE WOUND,5k ohm,5%,. 0.50W (80009 No. 311-1560-00)	1	T
-49	91A R2500	73138	. RESISTOR,VARIABLE,NONWIRE WOUND,trimmer,.... 2.5k ohm,0.5W (80009 No. 311-1561-00)	1	U
-50	91A-250R0M	73138	. RESISTOR,VARAIBLE,NONWIRE WOUND,250 ohm,.... 20%,0.50W (80009 No. 311-1565-00)	1	
-51	91A-100R0M	73138	. RESISTOR,VARIABLE,NONWIRE WOUND,100 ohm,20%, 0.50W (80009 No. 311-1567-00)	1	
-52	CB1005	01121	. RESISTOR,FIXED,COMPOSITION,10 ohm,5%,0.25W.. (80009 No. 315-0100-00)	4	
-53	CB1015	01121	. RESISTOR,FIXED,COMPOSITION,100 ohm,5%,0.25W. (80009 No. 315-0101-00)	4	
-54	CB1025	01121	. RESISTOR,FIXED,COMPOSITION,1k ohm,5%,0.25W.. (80009 No. 315-0102-00)	1	
-55	CB1035	01121	. RESISTOR,FIXED,COMPOSITION,10k ohm,5%,0.25W. (80009 No. 315-0103-00)	2	
-56	CB1215	01121	. RESISTOR,FIXED,COMPOSITION,120 ohm,5%,0.25W. (80009 No. 315-0121-00)	3	
-57	CB1315	01121	. RESISTOR,FIXED,COMPOSITION,130 ohm,5%,0.25W. (80009 No. 315-0131-00)	1	
-58	CB1325	01121	. RESISTOR,FIXED,COMPOSITION,1.3k ohm,5%,0.25W (80009 No. 315-0132-00)	1	
-59	CB1335	01121	. RESISTOR,FIXED,COMPOSITION,13k ohm,5%,0.25W. (80009 No. 315-0133-00)	1	
-60	CB1515	01121	. RESISTOR,FIXED,COMPOSITION,150 ohm,5%,0.25W. (80009 No. 315-0151-00)	3	
-61	CB1825	01121	. RESISTOR,FIXED,COMPOSITION,1.8k ohm,5%,0.25W (80009 No. 315-0182-00)	2	E
-61	CB1625	01121	. RESISTOR,FIXED,COMPOSITION,1.6K ohm,5%,0.25W (80009 No. 315-0162-00)	2	F
-62	CB2005	01121	. RESISTOR,FIXED,COMPOSITION,20 ohm,5%,0.25W.. (80009 No. 315-0200-00)	6	
-63	CB2015	01121	. RESISTOR,FIXED,COMPOSITION,200 ohm,5%,0.25W. (80009 No. 315-0201-00)	1	
-64	CB2025	01121	. RESISTOR,FIXED,COMPOSITION,2k ohm,5%,0.25W.. (80009 No. 315-0202-00)	2	
-65	CB2405	01121	. RESISTOR,FIXED,COMPOSITION,24 ohm,5%,0.25W.. (80009 No. 315-0240-00)	2	
-66	CB2415	01121	. RESISTOR,FIXED,COMPOSITION,240 ohm,5%,0.25W. (80009 No. 315-0241-00)	3	T
-66	CB2415	01121	. RESISTOR,FIXED,COMPOSITION,240 ohm,5%,0.25W. (80009 No. 315-0241-00)	2	U
-66	CB2015	01121	. RESISTOR,FIXED,COMPOSITION,200 ohm,5%,0.25W. (80009 No. 315-0201-00)	1	U
-67	CB2235	01121	. RESISTOR,FIXED,COMPOSITION,22k ohm,5%,0.25W. (80009 No. 315-0223-00)	1	
-68	CB3015	01121	. RESISTOR,FIXED,COMPOSITION,300 ohm,5%,0.25W. (80009 No. 315-0301-00)	3	
-69	CB3305	01121	. RESISTOR,FIXED,COMPOSITION,33 ohm,5%,0.25W.. (80009 No. 315-0330-00)	1	
-70	CB3325	01121	. RESISTOR,FIXED,COMPOSITION,3.3k ohm,5%,0.25W (80009 No. 315-0332-00)	1	
-71	CB3615	01121	. RESISTOR,FIXED,COMPOSITION,360 ohm,5%,0.25W. (80009 No. 315-0361-00)	1	
-72	CB3625	01121	. RESISTOR,FIXED,COMPOSITION,3.6k ohm,5%,0.25W (80009 No. 315-0362-00)	1	

FIG. & INDEX NO.	PART NUMBER	FSCM	1 2 3 4 5 6 7 DESCRIPTION	UNITS PER ASSY	USABLE ON CODE
8-5-73	CB4305	01121	. RESISTOR,FIXED,COMPOSITION,43 ohm,5%,0.25W.. (80009 No. 315-0430-00)	3	
-74	CB4315	01121	. RESISTOR,FIXED,COMPOSITION,430 ohm,5%,0.25W. (80009 No. 315-0431-00)	3	
-75	CB4705	01122	. RESISTOR,FIXED,COMPOSITION,47 ohm,5%,0.25W.. (80009 No. 315-0470-00)	1	
-76	CB4715	01121	. RESISTOR,FIXED,COMPOSITION,470 ohm,5%,0.25W. (80009 No. 315-0471-00)	1	
-77	CB4745	01121	. RESISTOR,FIXED,COMPOSITION,470k ohm,5%,0.25W (80009 No. 315-0474-00)	2	
-78	CB5115	01121	. RESISTOR,FIXED,COMPOSITION,510 ohm,5%,0.25W. (80009 No. 315-0511-00)	1	A,U
-78	CB4315	01121	. RESISTOR,FIXED,COMPOSITION,430 ohm,5%,0.25W (80009 No. 315-0431-00)	1	V
-79	CB5125	01121	. RESISTOR,FIXED,COMPOSITION,5.1k ohm,5%,0.25W (80009 No. 315-0512-00)	1	
-80	CB5605	01121	. RESISTOR,FIXED,COMPOSITION,56 ohm,5%,0.25W.. (80009 No. 315-0560-00)	3	
-81	CB5625	01121	. RESISTOR,FIXED,COMPOSITION,5.6k ohm,5%,0.25W (80009 No. 315-0562-00)	1	
-82	CB4705	01121	. RESISTOR,FIXED,COMPOSITION,47 ohm,5%,0.25W.. (80009 No. 315-0470-00)	2	
-83	CB6215	01121	. RESISTOR,FIXED,COMPOSITION,620 ohm,5%,0.25W. (80009 No. 315-0621-00)	2	
-84	CB6235	01121	. RESISTOR,FIXED,COMPOSITION,62k ohm,5%,0.25W. (80009 No. 315-0623-00)	1	
-85	CB6815	01121	. RESISTOR,FIXED,COMPOSITION,680 ohm,5%,0.25W. (80009 No. 315-0681-00)	1	
-86	CB8205	01121	. RESISTOR,FIXED,COMPOSITION,82 ohm,5%,0.25W.. (80009 No. 315-0820-00)	2	
-87	BB1005	01121	. RESISTOR,FIXED,COMPOSITION,10 ohm,5%,0.125W. (80009 No. 317-0100-00)	2	
-88	BB1215	01121	. RESISTOR,FIXED,COMPOSITION,120 ohm,5%,0.125W (80009 No. 317-0121-00)	2	
-89	BB1225	01121	. RESISTOR,FIXED,COMPOSITION,1.2k ohm,5%,..... 0.125W (80009 No. 317-0122-00)	2	
-90	BB2025	01121	. RESISTOR,FIXED,COMPOSITION,2k ohm,5%,0.125W. (80009 No. 317-0202-00)	2	
-90.1	BB4705	01121	. RESISTOR,FIXED,COMPOSITION,47 ohm,5%,..... 0.125W (80009 No. 317-0470-00)	2	
-91	BB4715	01121	. RESISTOR,FIXED,COMPOSITION,470 ohm,5%,0.125W (80009 No. 317-0471-00)	1	
-92	BB5625	01121	. RESISTOR,FIXED,COMPOSITION,5.6k ohm,5%,..... 0.125W (80009 No. 317-0562-00)	1	A
-92	BB8225	01121	. RESISTOR,FIXED,COMPOSITION,8.2K,5%,0.125W.... (80009 No. 317-0822-00)	1	B
-93	MFF1816G10R20F	91637	. RESISTOR,FIXED,FILM,10.2 ohm,1%,0.125W..... (80009 No. 321-0002-00)	1	
-94	MFF1816G12R70F	91637	. RESISTOR,FIXED,FILM,12.7 ohm,1%,0.125W..... (80009 No. 321-0011-00)	1	
-95	MFF1816G30R10F	91637	. RESISTOR,FIXED,FILM,30.1 ohm,1%,0.125W..... (80009 No. 321-0047-00)	2	
-96	MFF1816G38R30F	91637	. RESISTOR,FIXED,FILM,38.3 ohm,1%,0.125W..... (80009 No. 321-0057-00)	1	
-97	MFF1816G39R20F	91637	. RESISTOR,FIXED,FILM,39.2 ohm,1%,0.125W..... (80009 No. 321-0058-00)	1	

FIG. & INDEX NO.	PART NUMBER	FSCM	1 2 3 4 5 6 7 DESCRIPTION	UNITS PER ASSY	USABLE ON CODE
8-5-98	MFF1816G41R20F	91637	. RESISTOR,FIXED,FILM,41.2 ohm,1%,0.125W..... (80009 No. 321-0060-00)	1	
-99	MFF1816G49R90F	91637	. RESISTOR,FIXED,FILM,49.9 ohm,1%,0.125W..... (80009 No. 321-0068-00)	3	
-100	MFF1816G60R40F	91637	. RESISTOR,FIXED,FILM,60.4 ohm,1%,0.125W..... (80009 No. 321-0076-00)	2	
-101	MFF1816G66R50F	91637	. RESISTOR,FIXED,FILM,66.5 ohm,1%,0.125W..... (80009 No. 321-0080-00)	2	
-102	MFF1816G75R00F	91637	. RESISTOR,FIXED,FILM,75 ohm,1%,0.125W..... (80009 No. 321-0085-00)	2	
-103	MFF1816G80R60F	91637	. RESISTOR,FIXED,FILM,80.6 ohm,1%,0.125W..... (80009 No. 321-0088-00)	2	
-104	MFF1816G93R10F	91637	. RESISTOR,FIXED,FILM,93.1 ohm,1%,0.125W..... (80009 No. 321-0094-00)	1	
-105	MFF1816G110R0F	91637	. RESISTOR,FIXED,FILM,110 ohm,1%,0.125W..... (80009 No. 321-0101-00)	2	
-106	MFF1816G133R0F	91637	. RESISTOR,FIXED,FILM,133 ohm,1%,0.125W..... (80009 No. 321-0109-00)	2	
-107	MFF1816G150R0F	91637	. RESISTOR,FIXED,FILM,150 ohm,1%,0.125W..... (80009 No. 321-0114-00)	1	
-108	MFF1816G162R0F	91637	. RESISTOR,FIXED,FILM,162 ohm,1%,0.125W..... (80009 No. 321-0117-00)	1	
-109	MFF1816G174R0F	91637	. RESISTOR,FIXED,FILM,174 ohm,1%,0.125W..... (80009 No. 321-0120-00)	1	
-110	MFF1816G287R0F	91637	. RESISTOR,FIXED,FILM,287 ohm,1%,0.125W..... (80009 No. 321-0141-00)	4	
-111	MFF1816G294R0F	91637	. RESISTOR,FIXED,FILM,294 ohm,1%,0.125W..... (80009 No. 321-0142-00)	2	
-112	MFF1816G324R0F	91637	. RESISTOR,FIXED,FILM,324 ohm,1%,0.125W..... (80009 No. 321-0146-00)	2	
-113	MFF1816G332R0F	91637	. RESISTOR,FIXED,FILM,332 ohm,1%,0.125W..... (80009 No. 321-0147-00)	2	
-114	MFF1816G392R0F	91637	. RESISTOR,FIXED,FILM,392 ohm,1%,0.125W..... (80009 No. 321-0154-00)	3	
-115	MFF1816G412R0F	91637	. RESISTOR,FIXED,FILM,412 ohm,1%,0.125W..... (80009 No. 321-0156-00)	2	
-116	MFF1816G511R0F	91637	. RESISTOR,FIXED,FILM,511 ohm,1%,0.125W..... (80009 No. 321-0165-00)	1	
-117	MFF1816G11000F	91637	. RESISTOR,FIXED,FILM,1.1k ohm,1%,0.125W..... (80009 No. 321-0197-00)	1	
-118	MFF1816G35702F	91637	. RESISTOR,FIXED,FILM,357k ohm,1%,0.125W..... (80009 No. 321-0438-00)	1	
-119	MFF1816G10003F	91637	. RESISTOR,FIXED,FILM,1M ohm,1%,0.125W..... (80009 No. 321-0481-00)	2	
-120	MFF1816D400R0C	91637	. RESISTOR,FIXED,FILM,400 ohm,0.25%,0.125W.... (80009 No. 321-0773-03)	2	
	105-0421-00	80009	. ACTUATOR,SWITCH ASSEMBLY.....	1	
-121	105-0420-00	80009	. . ACTUATOR,SWITCH,Momentary.....	1	
-122	214-1779-00	80009	. . SPRING,HELICAL COMPRESSION,0.156 OD X..... 0.844 inch long	1	
-123	351-0359-00	80009	. . GUIDE,SLIDE SWITCH.....	1	
	105-0423-00	80009	. ACTUATOR,SWITCH ASSEMBLY.....	1	
-124	376-0146-00	80009	. . COUPLING,SHAFT,RIGID,for 0.125 inch..... diameter shaft	1	
-125	213-0048-00	80009	. . . SETSCREW,4-40 X 0.125 inch,hex socket,.. steel	1	

FIG. & INDEX NO.	PART NUMBER	FSCM	1 2 3 4 5 6 7 DESCRIPTION	UNITS PER ASSY	USABLE ON CODE
8-5-126	214-1126-01	80009	. . SPRING,FLAT,green colored.....	2	
-127	214-1127-00	80009	. . ROLLER,DETENT,0.125 OD X 0.125 inch long..	2	
-128	105-0422-00	80009	. . ACTUATOR,SWITCH,Bandwidth Limit.....	1	
-129	351-0355-00	80009	. . GUIDE,SLIDE SWITCH.....	1	
-130	131-1030-00	80009	. CONTACT,ASSEMBLY,ELECTRICAL,cam switch,..... bottom	6	
-131	131-1031-00	80009	. CONTACT ASSEMBLY,ELECTRICAL,cam switch,top..	7	
-132	131-1003-00	80009	. CONNECTOR BODY,circuit board mount,3 prong..	1	
-133	FTSM19L1	98291	. TERMINAL,FEEDTHRU,insulated,0.566 inch long. (80009 No. 131-0158-00)	2	
-134	47357	22526	. CONTACT,ELECTRICAL,0.365 inch long (80009... No. 131-0608-00)	25	
	47350	22526	. CONTACT,ELECTRICAL,0.46 inch long (80009 No.. 131-0589-00)	2	
-135	131-0566-00	80009	. LINK,TERMINAL CONNECTOR,0.086 OD X 2.375.... inch long	1	
-136	75060-012	22526	. SOCKET,PIN TERMINAL,0.188 inch long (80009.. No. 136-0252-07)	19	
-137	214-0579-00	80009	. TERMINAL,TEST POINT,0.40 inch long.....	1	
-138	J-64281	71590	. SPACER,SWITCH,plastic (80009 No.361-0542-00)	4	
-139	361-0383-00	80009	. SPACER,PUSH BUTTON SWITCH,charcoal,0.33 inch long	2	
-140	343-0519-00	80009	. RETAINER,HEAT SINK,microcircuit.....	1	
-141	380-0421-00	80009	. HOUSING,CONTACT SET.....	1	
-142	75060-012	22526	. SOCKET,PIN CONNECTOR,without dimple..... (80009 No. 136-0252-07)	30	U

For Service Manuals Contact
MAURITRON TECHNICAL SERVICES
8 Cherry Tree Rd, Chinnor
Oxon OX9 4QY
Tel:- 01844-351694 Fax:- 01844-352554
Email:- enquiries@mauritron.co.uk

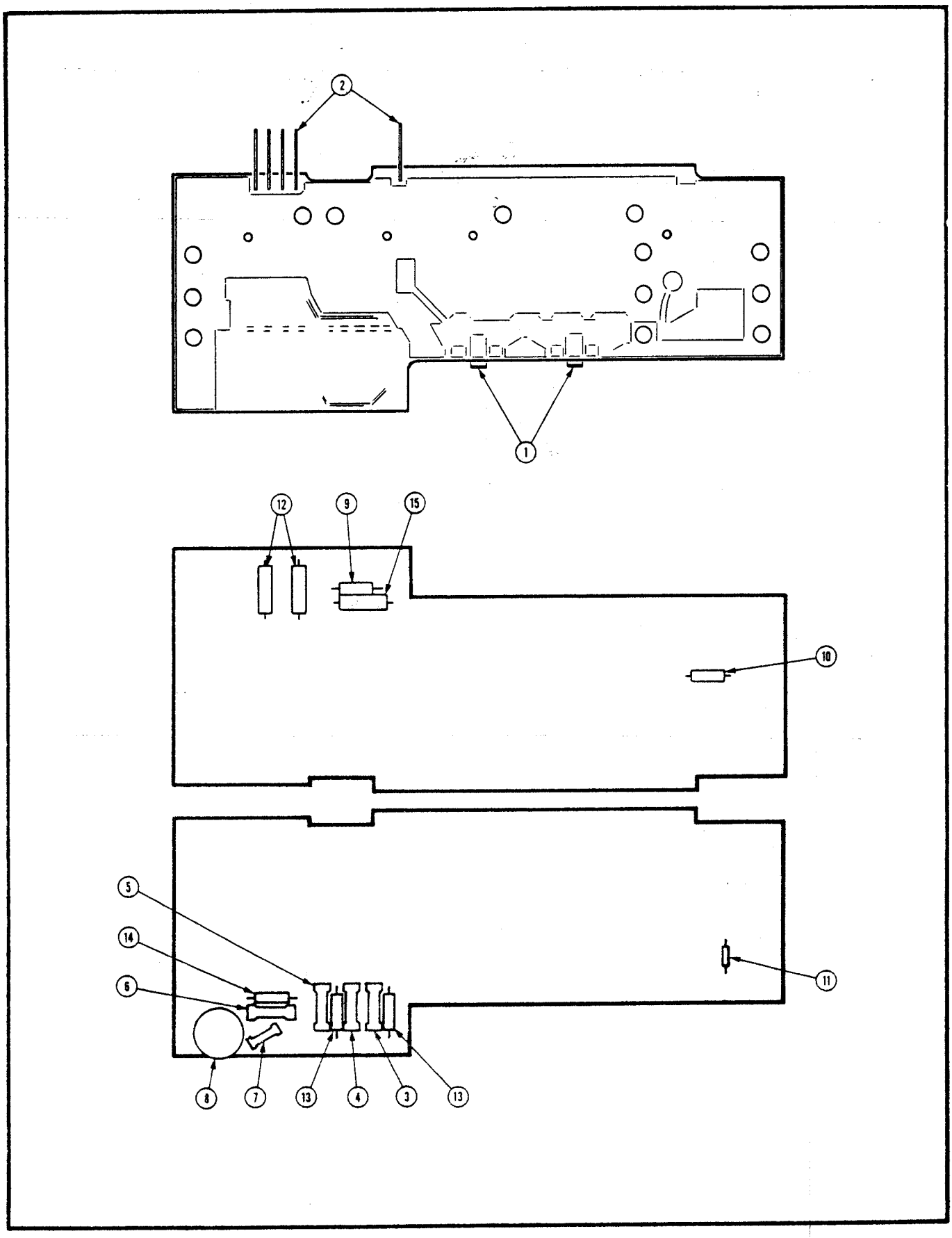

Figure 8-6. A1 Circuit Board Assembly, Cam Switch, Channel 1 (sheet 1 of 2).

FIG. & INDEX NO.	PART NUMBER	FSCM	1 2 3 4 5 6 7 DESCRIPTION	UNITS PER ASSY	USABLE ON CODE
8-6	670-4850-00	80009	CIRCUIT BOARD ASSEMBLY,Cam Switch,Channel 1,.. NHA Figure 4-90	REF	
-1	131-1978-00	80009	. CONTACT,ELECTRICAL,circuit board to shield..	2	
-2	131-1979-00	80009	. CONTACT,ELECTRICAL,male,0.415 inch long.....	5	
-3	301-050C0G0180J	72982	. CAPACITOR,FIXED,CERAMIC DIELECTRIC,18pF,5%,. 500V (80009 No. 281-0578-00)	1	
-4	301-000C0G0210F	72982	. CAPACITOR,FIXED,CERAMIC DIELECTRIC,21pF,1%,. 500V (80009 No. 281-0620-00)	1	
-5	301-000C0J0399C	72982	. CAPACITOR,FIXED,CERAMIC DIELECTRIC,3.9pF,... 10%,500V (80009 No. 281-0593-00)	1	
-6	301-000C0J0229C	72982	. CAPACITOR,FIXED,CERAMIC DIELECTRIC,2.2pF,... +/-0.25pF,500V (80009 No. 281-0604-00)	1	
-7	374005C0H0789B	72982	. CAPACITOR,FIXED,CERAMIC DIELECTRIC,7.8pF,... +/-0.1pF,500V (80009 No. 281-0717-00)	1	
-8	91A-200R0M	73138	. RESISTOR,VARIABLE,NONWIRE WOUND,200 ohm,.... 20%,0.50W (80009 No. 311-1566-00)	1	
-9	CB1315	01121	. RESISTOR,FIXED,COMPOSITION,130 ohm,5%,0.25W. (80009 No. 315-0131-00)	1	
-10	CB5105	01121	. RESISTOR,FIXED,COMPOSITION,51 ohm,5%,0.25W.. (80009 No. 315-0510-00)	1	
-11	BB1055	01121	. RESISTOR,FIXED,COMPOSITION,1M ohm,5%,0.125W. (80009 No. 317-0105-00)	1	
-12	MFF1816G150R0D	91637	. RESISTOR,FIXED,FILM,150 ohm,0.5%,0.125W..... (80009 No. 321-0114-01)	2	
-13	MFF1816G200R0D	91637	. RESISTOR,FIXED,FILM,200 ohm,0.5%,0.125W..... (80009 No. 321-0126-01)	2	
-14	MFF1816G133R3D	91637	. RESISTOR,FIXED,FILM,133.3 ohm,0.5%,0.125W... (80009 No. 321-1708-01)	1	
-15	MFF1816G800R0D	91637	. RESISTOR,FIXED,FILM,800 ohm,0.5%,0.125W..... (80009 No. 321-1709-01)	1	

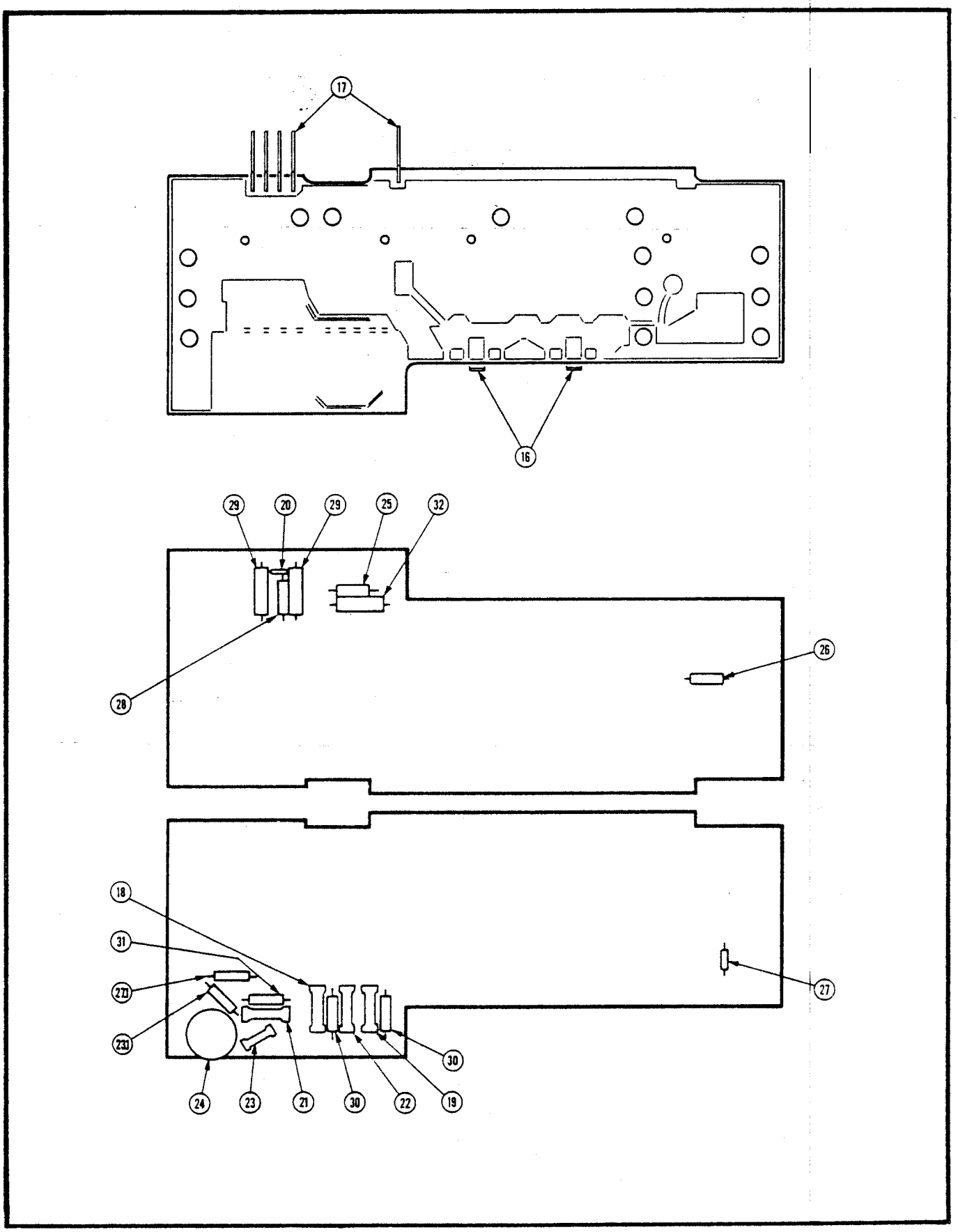

Figure 8-6. A3 Circuit Board Assembly, Cam Switch, Channel 2 (sheet 2 of 2)

FIG. & INDEX NO.	PART NUMBER	FSCM	1 2 3 4 5 6 7 DESCRIPTION	UNITS PER ASSY	USABLE ON CODE
8-6-	670-4850-01	80009	CIRCUIT BOARD ASSEMBLY,Cam Switch,Channel 2,.. NHA Figure 4-90	REF	
-16	131-1978-00	80009	. CONTACT,ELECTRICAL,circuit board to shield..	2	
-17	131-1979-00	80009	. CONTACT,ELECTRICAL,male,0.415 inch long.....	5	
-18	374-001C0J0229B	72982	. CAPACITOR,FIXED,CERAMIC DIELECTRIC,2.2pF,... 10%,500V (80009 No. 281-0610-00)	1	
-19	301-000C0G0240J	72982	. CAPACITOR,FIXED,CERAMIC DIELECTRIC,24pF,5%,. 500V (80009 No. 281-0564-00)	1	
-20	8111B061C0G220J	72982	. CAPACITOR,FIXED,CERAMIC DIELECTRIC,22pF,5%,. 50V (80009 No. 283-0154-00)	1	
-21	301-000C0J0339B	72982	. CAPACITOR,FIXED,CERAMIC DIELECTRIC,3.3pF,... 10%,500V (80009 No. 281-0626-00)	1	E
-21	374-001C0J0229B	72982	. CAPACITOR,FIXED,CERAMIC DIELECTRIC,2.2pF,... +/-0.1pF 500V (80009 No. 281-0610-00)	1	F
-22	374011C0G100C	72982	. CAPACITOR,FIXED,CERAMIC DIELECTRIC,10pF,.... +/-0.25pF,500V (80009 No. 281-0634-00)	1	
-23	374005C0H0909B	72982	. CAPACITOR,FIXED,CERAMIC DIELECTRIC,9pF,..... +/-0.1pF,500V (80009 No. 281-0789-00)	1	E
-23	374-005C0G0130G	72982	. CAPACITOR,FIXED,CERAMIC DIELECTRIC,13pF,.... 2%,500V (80009 No. 281-0657-00)	1	F
-23.1	374-005C0G909B	72982	. CAPACITOR,FIXED,CERAMIC DIELECTRIC,9pF,..... +/-1pF,500V (80009 No. 281-0789-00)	1	F
-24	91A-200R0M	73138	. RESISTOR,VARIABLE,NONWIRE WOUND,200 ohm,.... 20%,0.50W (80009 No. 311-1566-00)	1	
-25	CB2715	01121	. RESISTOR,FIXED,COMPOSITION,270 ohm,5%,0.25W. (80009 No. 315-0271-00)	1	
-26	CB5105	01121	. RESISTOR,FIXED,COMPOSITION,51 ohm,5%,0.25W.. (80009 No. 315-0510-00)	1	
-27	BB1055	01121	. RESISTOR,FIXED,COMPOSITION,1M ohm,5%,0.125W. (80009 No. 317-0105-00)	1	
-27.1	BB2215	01121	. RESISTOR,FIXED,COMPOSITION,220 ohm,5%,0.125W (80009 No. 317-0221-00)	1	F
-28	BB3005	01121	. RESISTOR,FIXED,COMPOSITION,30 ohm,5%,0.125W. (80009 No. 317-0300-00)	1	
-29	MFF1816G150R0D	91637	. RESISTOR,FIXED,FILM,150 ohm,0.5%,0.125W..... (80009 No. 321-0114-01)	2	
-30	MFF1816G200R0D	91637	. RESISTOR,FIXED,FILM,200 ohm,0.5%,0.125W..... (80009 No. 321-0126-01)	2	
-31	MFF1816G133R3D	91637	. RESISTOR,FIXED,FILM,133.3 ohm,0.5%,0.125W... (80009 No. 321-1708-01)	1	
-32	MFF1816G800R0D	91637	. RESISTOR,FIXED,FILM,800 ohm,0.5%,0.125W..... (80009 No. 321-1709-01)	1	

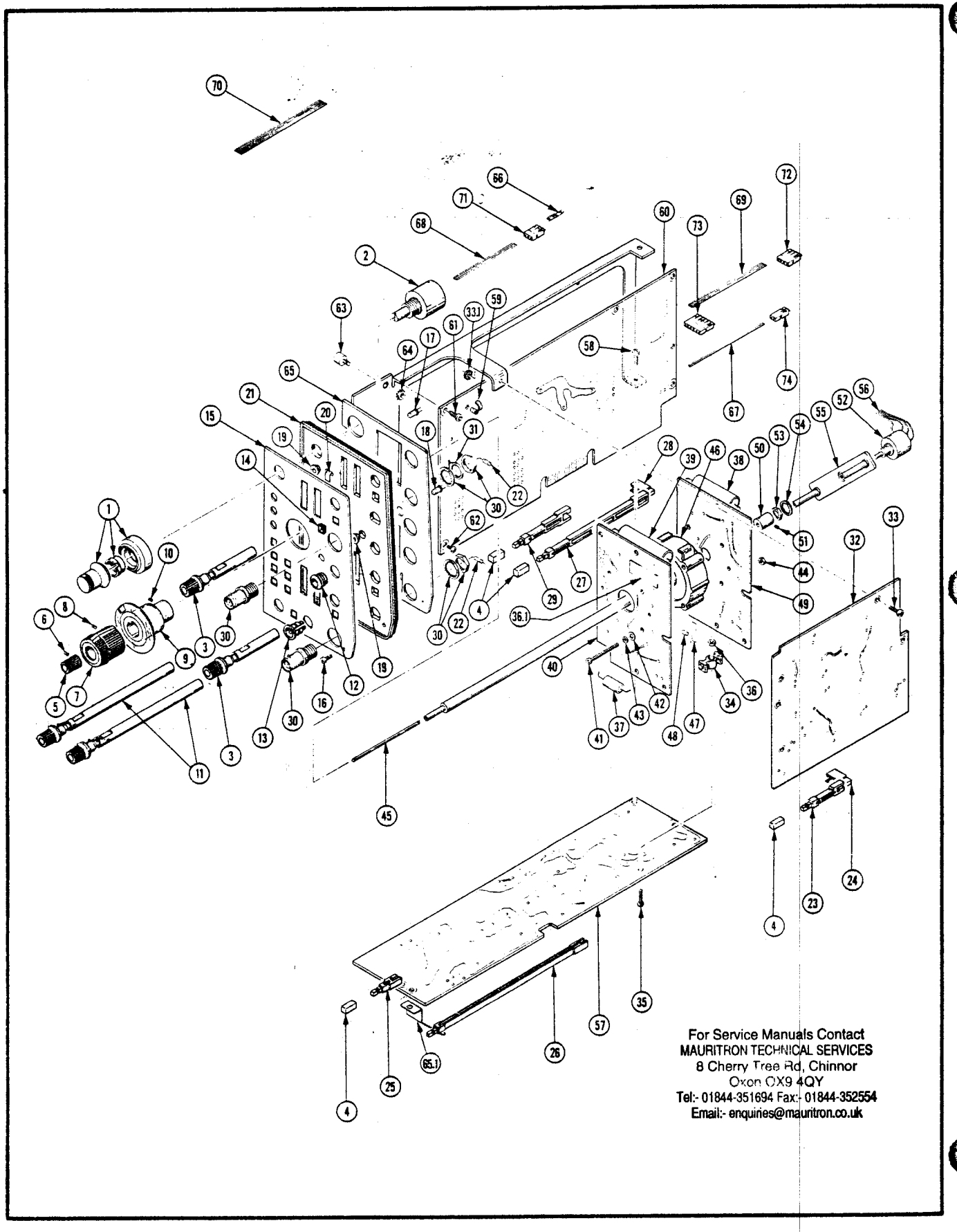

For Service Manuals Contact
MAURITRON TECHNICAL SERVICES
8 Cherry Tree Rd, Chinnor
Oxon OX9 4QY
Tel:- 01844-351694 Fax:- 01844-352554
Email:- enquiries@mauritron.co.uk

Figure 8-7. Horizontal Module Assembly.

FIG. & INDEX NO.	PART NUMBER	FSCM	1 2 3 4 5 6 7 DESCRIPTION	UNITS PER ASSY	USABLE ON CODE
8-7-	672-0613-00	80009	CIRCUIT BOARD ASSEMBLY,Horizontal Module..... NHA Figure 1-5	REF	
-1	461-S-70	05129	. DIAL,CONTROL,10 turn for 0.25 inch diameter. shaft (80009 No. 331-0328-00)	1	
-2	3540S-561-103	32997	. RESISTOR,VARIABLE,WIREWOUND,10k ohm,5%,2W... (80009 No. 311-1729-00)	1	
-3	384-1366-00	80009	. EXTENSION SHAFT,0.2 OD X 2.135 inch long,... with knob	2	
-4	366-1559-00	80009	. PUSH BUTTON,gray.....	10	
-5	366-1346-02	80009	. KNOB,red,variable.....	1	
-6	213-0153-00	80009	. . SETSCREW,5-40 X 0.125 inch,hex socket,.... steel	1	
-7	366-1219-00	80009	. KNOB,0.906 OD X 0.89 inch long,Time/Division	1	
-8	213-0243-00	80009	. . SETSCREW,5-40 X 0.25 inch,hex socket,steel	2	
-9	354-0442-01	80009	. RING,KNOB SKIRT.....	1	
-10	213-0004-00	80009	. . SETSCREW,6-32 X 0.188 inch,hex socket,.... steel	1	
-11	384-1350-02	80009	. KNOB,0.28 OD X 4.515 inch long.....	2	
-12	358-0569-00	80009	. BUSHING,PLASTIC,0.412 OD X 0.257 ID X 0.293. inch long	1	
-13	358-0550-00	80009	. BUSHING,SHAFT,0.15 ID X 0.3 inch OD,plastic.	4	
-14	426-1072-00	80009	. FRAME,PUSH BUTTON,plastic.....	10	
-15	333-2278-00	80009	. PANEL,FRONT,Horizontal.....	1	
-16	213-0113-00	80009	. SCREW,TAPPING,THREAD FORMING,2-32 X 0.312... inch,pnh,steel (AP)	1	
-17	FLV160	07263	. LAMP,LIGHT EMITTING DIODE,red,2V,100MA..... (80009 No. 150-1001-02)	3	
-18	OSL-16L-100	50437	. LAMP,LIGHT EMITTING DIODE,green,55MA..... (80009 No. 150-1017-00)	1	
-19	352-0477-00	80009	. HOLDER,LIGHT EMITTING DIODE.....	4	
-20	214-2329-00	80009	. SPRING,GROUND,front panel.....	1	
-21	342-0367-00	80009	. INSULATOR,PLATE,front panel,horizontal.....	1	
-22	CB2705	01121	. RESISTOR,FIXED,COMPOSITION,27 ohm,5%,0.25W.. (80009 No. 315-0270-00)	2	
	384-1389-01	80009	. EXTENSION SHAFT,1.905 inch long,offset,..... plastic	1	
-23	384-1099-00	80009	. . EXTENSION SHAFT,push button,1.54 inch long	1	
-24	103-0186-02	80009	. . ADAPTER,EXTENSION SHAFT,push button,0.60.. offset	1	
-25	384-1136-00	80009	. EXTENSION SHAFT,0.95 inch long.....	1	
-26	384-1129-00	80009	. EXTENSION SHAFT,5.607 inch long.....	1	
	384-1390-00	80009	. EXTENSION SHAFT,4.460 inch long,offset.....	3	
-27	384-1101-00	80009	. . EXTENSION SHAFT,push button,4.14 inch long	3	
-28	103-0186-01	80009	. . ADAPTER,EXTENSION SHAFT,push button,0.45.. offset	3	
-29	384-1341-00	80009	. EXTENSION SHAFT,2.183 inch long,offset.....	4	
-30	28JR166-1	24931	. CONNECTOR,RECEPTACLE,BNC female (80009 No... 131-0352-02)	2	
-31	210-0255-00	80009	. TERMINAL,LUG,0.391 inch ID,internal tooth...	1	
-32	670-4847-00	80009	. CIRCUIT BOARD ASSEMBLY,Trigger,See Figure 8. for Breakdown	1	

FIG. & INDEX NO.	PART NUMBER	FSCM	1 2 3 4 5 6 7 DESCRIPTION	UNITS PER ASSY	USABLE ON CODE
8-7-33	211-0121-00	80009	. SCREW,ASSEMBLY,WASHER,4-40 X 0.438 inch,.... double sems (AP)	1	
-33.1	210-0586-00	80009	. NUT,PLAIN,4-40 X 0.25 inch,steel (AP)	1	
-34	343-0582-00	80009	. RETAINER,SWITCH,black plastic.....	2	
-35	211-0012-00	80009	. SCREW,MACHINE,4-40 X 0.375 inch,pnh,steel... (AP)	1	
	211-0097-00	80009	. SCREW,MACHINE,4-40 X 0.312 inch,pnh,steel... (AP)	1	
-36	2X12161-402	73743	. NUT,PLAIN,HEXAGON,4-40 X 0.188 inch,brass... (80009 No. 210-0406-00)	2	
-36.1	334-3448-00	80009	. MARKER,IDENTIFICATION,marked NOTICE	1	J
	672-0614-00	80009	. CIRCUIT BOARD ASSEMBLY,Time/Division Switch.	1	
	295-0177-00	80009	. . CAPACITOR SET,MATCHED,0.01uF,1uF,10uF,.... 0.01uF	1	
-37	285-0753-00*	80009	. . . CAPACITOR,FIXED,PLASTIC,0.01uF,3.5%,100V	2	
-38	285-0782-00*	80009	. . . CAPACITOR,FIXED,PLASTIC,1.0uF,3.5%,100V.	2	
-39	285-1060-01*	80009	. . . CAPACITOR,FIXED,PLASTIC,10uF,3%,25V.....	1	
-40	670-4848-00	80009	. . CIRCUIT BOARD ASSEMBLY,A Timing,See Figure 9 for Breakdown	1	
-41	211-0019-00	80009	. . SCREW,MACHINE,4-40 X 1.0 inch,pnh,steel... (AP)	4	
-42	210-0994-00	80009	. . WASHER,FLAT,0.125 ID X 0.25 inch OD,steel. (AP)	4	
-43	210-0054-00	80009	. . WASHER,LOCK,split,0.118 ID X 0.212 inch... OD,steel (AP)	4	
-44	2X12161-402	73743	. . NUT,PLAIN,HEXAGON,4-40 X 0.188 inch,brass. (AP) (80009 No. 210-0406-00)	2	
-45	384-1322-00	80009	. . EXTENSION SHAFT,0.081 OD X 11.05 inch long	1	
-46	263-1110-00	80009	. . ACTUATOR ASSEMBLY,ROTARY,Timing Switch....	1	
-47	214-1139-02	80009	. . . SPRING,FLAT,gold colored.....	4	
-48	401-0322-00	80009	. . . ROLLER,DETENT,0.219 OD X 0.165 inch long	4	
-49	670-3551-02	80009	. . CIRCUIT BOARD ASSEMBLY,B Timing,See Figure 9 for Breakdown	1	
-50	376-0141-00	80009	. . COUPLING,SHAFT,RIGID,for 0.08 to 0.125.... inch diameter shaft	1	R
-50	376-0039-00	80009	. . COUPLING,SHAFT,RIGID,0.082 and 0.128 ID,al	1	S
-51	213-0075-00	80009	. . . SETSCREW,4-40 X 0.094 inch,hex socket,.. steel	3	
-52	381CM40935	12697	. . RESISTOR,VARIABLE,NONWIRE WOUND,20k ohm,.. 1W,DPST switch (80009 No. 311-1793-00)	1	
-53	2X20224-402	73743	. . NUT,PLAIN,HEXAGON,0.25-32 X 0.312 inch,... brass (AP) (80009 No. 210-0583-00)	1	
-54	1214-05-00-0541C	78189	. . WASHER,LOCK,internal,0.26 ID X 0.40 inch.. OD,steel (AP) (80009 No. 210-0046-00)	1	
-55	386-3156-00	80009	. . PLATE,MOUNTING,VARIABLE RESISTOR,2.10 X... 0.625 X 0.063 inch	1	
	198-3068-00	80009	. . WIRE SET,ELECTRICAL,timing switch assembly	1	
-56	TEK-175-0828-00	23499	. . . WIRE,ELECTRICAL,5 wire ribbon,0.396 feet long (80009 No. 175-0828-00)	AR	
-57	670-4855-00	80009	. CIRCUIT BOARD ASSEMBLY,Horizontal,See Figure 10 for Breakdown	1	

* Matched set, must be stocked under NHA.

FIG. & INDEX NO.	PART NUMBER	FSCM	1 2 3 4 5 6 7 DESCRIPTION	UNITS PER ASSY	USABLE ON CODE
8-7-58	213-0146-00	80009	. SCREW,TAPPING,THREAD FORMING,6-20 X 0.313... inch,pnh,steel (AP)	2	
-59	343-0088-00	80009	. CLAMP,LOOP,0.062 inch diameter.....	1	
-60	670-4846-00	80009	. CIRCUIT BOARD ASSEMBLY,Sweep,See Figure 11.. for Breakdown	1	
-61	213-0146-00	80009	. SCREW,TAPPING,THREAD FORMING,6-20 X 0.313... inch,pnh,steel (AP)	4	
-62	213-0138-00	80009	. SCREW,TAPPING,THREAD FORMING,4-40 X 0.188... inch,pnh,steel (AP)	1	
-63	129-0575-00	80009	. SPACER,POST,0.312 OD X 0.312 inch long,with. 6-32 threads	1	
-64	210-0457-00	80009	. NUT,PLAIN,EXTENDED WASHER,6-32 X 0.312 inch, steel (AP)	1	
-65	441-1366-00	80009	. CHASSIS,SCOPE,Horizontal.....	1	
-65.1	214-2631-00	80009	. SPRING,GROUNDING.....	1	
	198-3417-00	80009	. WIRE SET,ELECTRICAL,Horizontal Module.....	1	
-66	47439	22526	. . CONTACT,ELECTRICAL,0.48 inch long,22-26... AWG wire (80009 No. 131-0707-00)	29	
-67	175-0825-00	80009	. . WIRE,ELECTRICAL,2 wire ribbon,0.271 feet.. long	AR	
-68	175-0826-00	80009	. . WIRE,ELECTRICAL,3 wire ribbon,0.854 feet.. long	AR	
-69	TEK-175-0827-00	08261	. . WIRE,ELECTRICAL,4 wire ribbon,0.271 feet.. long (80009 No. 175-0827-00)	AR	
-70	TEK-175-0829-00	83501	. . WIRE,ELECTRICAL,6 wire ribbon,0.271 feet.. long (80009 No. 175-0829-00)	AR	
-71	352-0161-00	80009	. . CONNECTOR BODY,PLUG,ELECTRICAL,3 wire..... black	1	
-72	352-0162-00	80009	. . CONNECTOR BODY,PLUG,ELECTRICAL,4 wire..... black	1	
-73	352-0164-00	80009	. . CONNECTOR BODY,PLUG,ELECTRICAL,6 wire..... black	3	
-74	352-0169-00	80009	. . CONNECTOR BODY,PLUG,ELECTRICAL,2 wire..... black	3	

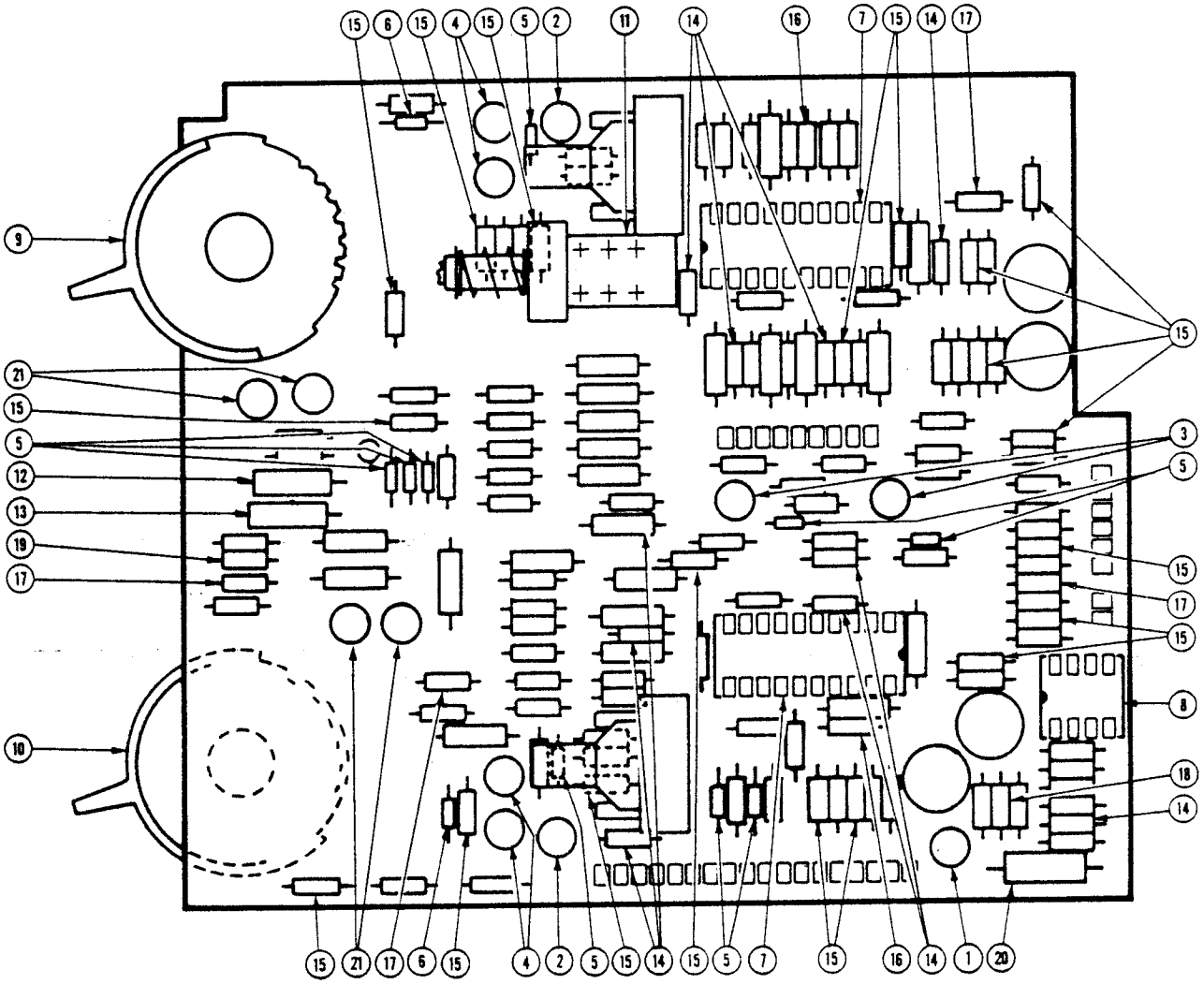

Figure 8-8. A7 Circuit Board Assembly, Trigger (sheet 1 of 3).

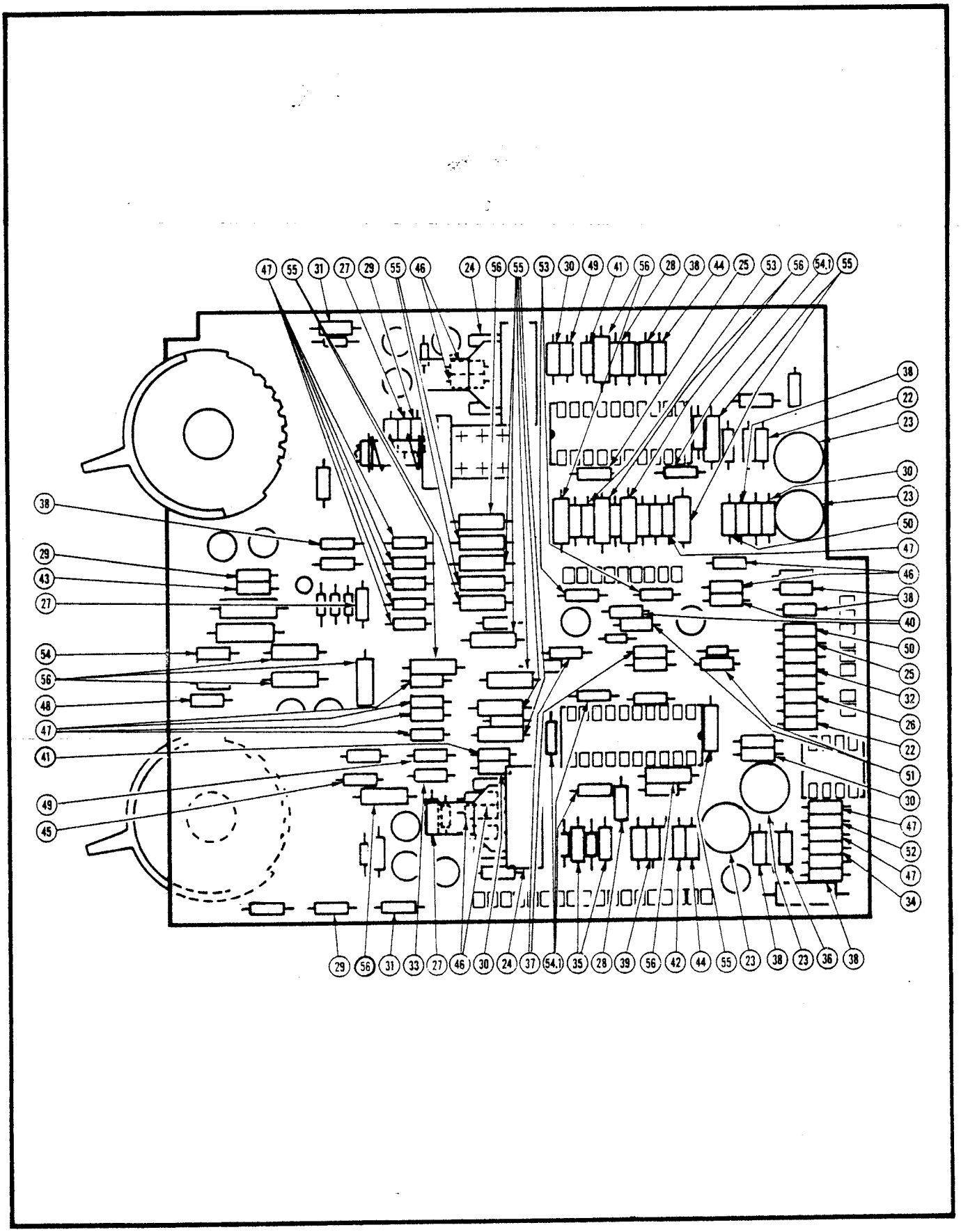

Figure 8-8. A7 Circuit Board Assembly, Trigger (sheet 2 of 3).

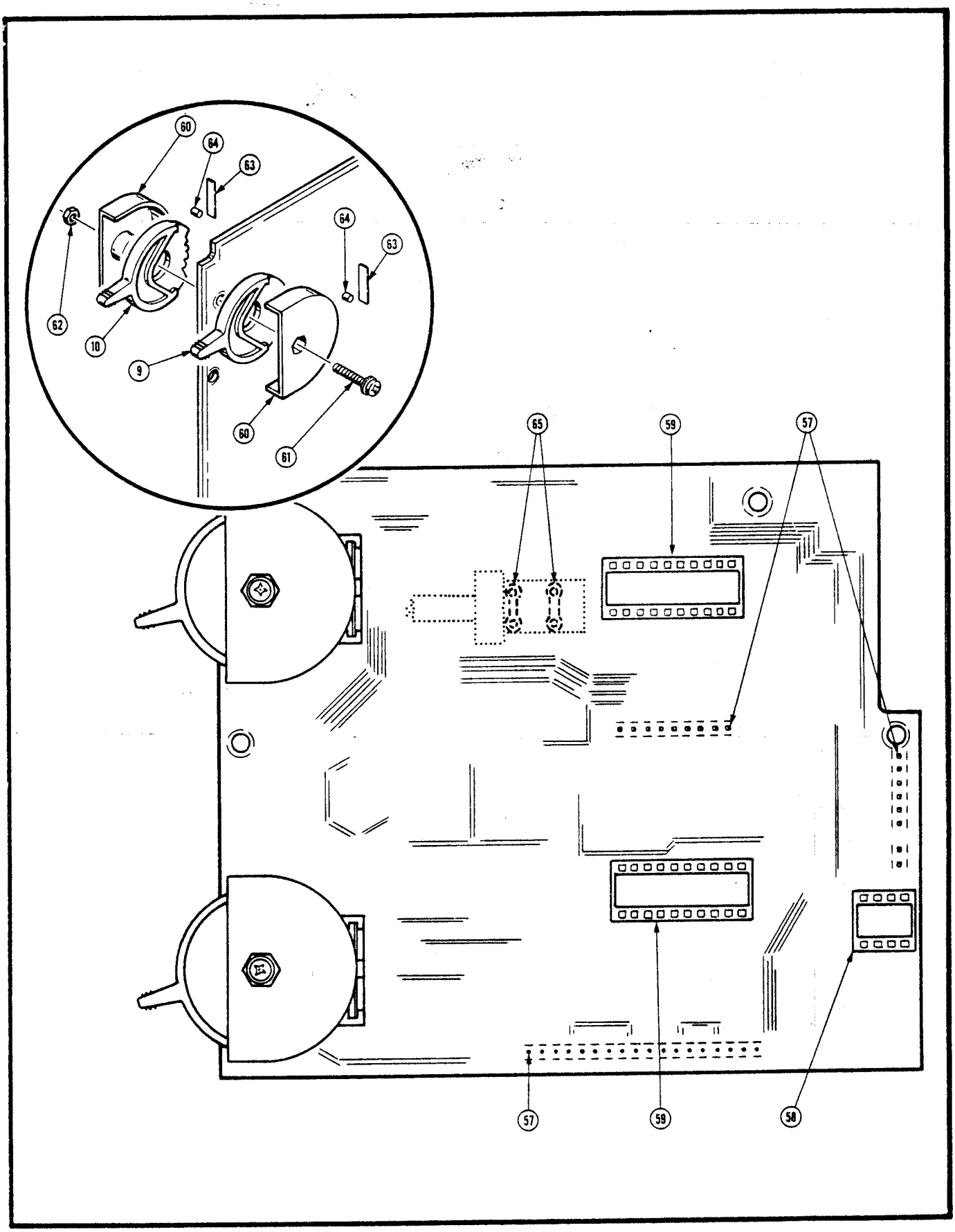

Figure 8-8. A7 Circuit Board Assembly, Trigger (sheet 3 of 3).

FIG. & INDEX NO.	PART NUMBER	FSCM	1 2 3 4 5 6 7 DESCRIPTION	UNITS PER ASSY	USABLE ON CODE
8-8-	670-4847-00	80009	CIRCUIT BOARD ASSEMBLY,Trigger,NHA Figure 7-32	REF	
-1	2N3906	01295	. TRANSISTOR,silicon,PNP (80009 No..... 151-0188-00)	1	
-2	151-0190-00	80009	. TRANSISTOR,silicon,NPN.....	2	
-3	151-0472-00	80009	. TRANSISTOR,silicon,NPN.....	2	
-4	151-1042-00	80009	. SEMICONDUCTOR DEVICE,SET,matched pair,FET...	2	
-5	1N4152R	01295	. SEMICONDUCTOR DEVICE,silicon,30V,150MA..... (80009 No. 152-0141-02)	9	
-6	CD12676	07910	. SEMICONDUCTOR DEVICE,silicon,400PIV,200MA... (80009 No. 152-0246-00)	2	
-7	155-0151-00	80009	. MICROCIRCUIT,DIGITAL,M159,trigger circuit...	2	
-8	156-0067-00	80009	. MICROCIRCUIT,LINEAR,operational amplifier...	1	
-9	214-2292-04	80009	. LEVER,SWITCH,6 position,14 degree,with..... contacts	2	
-10	214-2294-02	80009	. LEVER,SWITCH,4 position,14 degree,with..... contacts	2	
-11	260-1211-00	80009	. SWITCH,PUSH,DPDT,push-push.....	1	
-12	314-011C0K189B	72982	. CAPACITOR,FIXED,CERAMIC DIELECTRIC,1.8pF,... 0.1%,100V (80009 No. 281-0755-00)	1	
-13	314-011C0G220K	72982	. CAPACITOR,FIXED,CERAMIC DIELECTRIC,22pF,.... 10%,500V (80009 No. 281-0760-00)	1	
-14	8005H9AADW5R472K	72982	. CAPACITOR,FIXED,CERAMIC DIELECTRIC,0.0047uF, 10%,100V (80009 No. 281-0772-00)	12	
-15	8005H9AADW5R103K	72982	. CAPACITOR,FIXED,CERAMIC DIELECTRIC,0.01uF,.. 10%,100V (80009 No. 281-0773-00)	19	
-16	390049X5P0151K	72982	. CAPACITOR,FIXED,CERAMIC DIELECTRIC,150pF,... 10%,100V (80009 No. 281-0786-00)	2	
-17	8005-D-C0G-150K	72982	. CAPACITOR,FIXED,CERAMIC DIELECTRIC,15pF,.... 10%,100V (80009 No. 281-0797-00)	4	T
-17	8005-D-C0G-150K	72982	. CAPACITOR,FIXED,CERAMIC DIELECTRIC,15pF,.... 10%,100V (80009 No. 281-0797-00)	3	U
-18	8005D9AABZ5U104M	72982	. CAPACITOR,FIXED,CERAMIC DIELECTRIC,0.01uF,.. 20%,50V (80009 No. 281-0775-00)	1	
-19	390049X5P0820K	72982	. CAPACITOR,FIXED,CERAMIC DIELECTRIC,82pF,10%, 100V (80009 No. 281-0792-00)	1	
-20	223K02PT485	19396	. CAPACITOR,FIXED,PLASTIC,0.022uF,10%,200V.... (80009 No. 285-1101-00)	1	
-21	290-0776-00	80009	. CAPACITOR,FIXED,22uF,+50-10%,10V.....	4	
-22	CB51G5	01121	. RESISTOR,FIXED,COMPOSITION,5.1 ohm,5%,..... 0.25W (80009 No. 307-0113-00)	2	
-23	91A-50000M	73138	. RESISTOR,VARIABLE,NONWIRE WOUND,5k ohm,5%,.. 0.50W (80009 No. 311-1560-00)	4	
-24	3858Z-X03-203E	32997	. RESISTOR,VARIABLE,NONWIRE WOUND,20k ohm,.... 10%,2W (80009 No. 311-1724-00)	2	
-25	CB1005	01121	. RESISTOR,FIXED,COMPOSITION,10 ohm,5%,0.25W.. (80009 No. 315-0100-00)	2	
-26	CB1015	01121	. RESISTOR,FIXED,COMPOSITION,100 ohm,5%,0.25W. (80009 No. 315-0101-00)	1	
-27	CB1025	01121	. RESISTOR,FIXED,COMPOSITION,1k ohm,5%,0.25W.. (80009 No. 315-0102-00)	3	
-28	CB1035	01121	. RESISTOR,FIXED,COMPOSITION,10k ohm,5%,0.25W. (80009 No. 315-0103-00)	2	
-29	CB1055	01121	. RESISTOR,FIXED,COMPOSITION,1M ohm,5%,0.25W... (80009 No. 315-0105-00)	3	

FIG. & INDEX NO.	PART NUMBER	FSCM	1 2 3 4 5 6 7 DESCRIPTION	UNITS PER ASSY	USABLE ON CODE
8-8-30	CB1325	01121	. RESISTOR,FIXED,COMPOSITION,1.3k ohm,5%,0.25W (80009 No. 315-0132-00)	4	
-31	CB7505	01121	. RESISTOR,FIXED,COMPOSITION,75 ohm,5%,0.25W... (80009 No. 315-0750-00)	2	
-32	CB1525	01121	. RESISTOR,FIXED,COMPOSITION,1.5k ohm,5%,0.25W (80009 No. 315-0152-00)	1	
-33	CB1535	01121	. RESISTOR,FIXED,COMPOSITION,15k ohm,5%,0.25W. (80009 No. 315-0153-00)	1	
-34	CB1545	01121	. RESISTOR,FIXED,COMPOSITION,150k ohm,5%,0.25W (80009 No. 315-0154-00)	1	
-35	CB2025	01121	. RESISTOR,FIXED,COMPOSITION,2k ohm,5%,0.25W.. (80009 No. 315-0202-00)	2	
-36	CB2045	01121	. RESISTOR,FIXED,COMPOSITION,200k ohm,5%,0.25W (80009 No. 315-0204-00)	1	
-37	CB1005	01121	. RESISTOR,FIXED,COMPOSITION,10 ohm,5%,0.25W.. (80009 No. 315-0100-00)	2	
-38	CB2225	01121	. RESISTOR,FIXED,COMPOSITION,2.2k ohm,5%,0.25W (80009 No. 315-0222-00)	7	
-39	CB2235	01121	. RESISTOR,FIXED,COMPOSITION,22k ohm,5%,0.25W. (80009 No. 315-0223-00)	1	
-40	CB2715	01121	. RESISTOR,FIXED,COMPOSITION,270 ohm,5%,0.25W. (80009 No. 315-0271-00)	2	
-41	CB3025	01121	. RESISTOR,FIXED,COMPOSITION,3k ohm,5%,0.25W.. (80009 No. 315-0302-00)	2	
-42	CB3335	01121	. RESISTOR,FIXED,COMPOSITION,33k ohm,5%,0.25W. (80009 No. 315-0333-00)	1	
-43	CB3355	01121	. RESISTOR,FIXED,COMPOSITION,3.3M ohm,5%,0.25W (80009 No. 315-0335-00)	1	
-44	CB3625	01121	. RESISTOR,FIXED,COMPOSITION,3.6k ohm,5%,0.25W (80009 No. 315-0362-00)	2	
-45	CB3905	01121	. RESISTOR,FIXED,COMPOSITION,39 ohm,5%,0.25W.. (80009 No. 315-0390-00)	1	T
-46	CB4705	01121	. RESISTOR,FIXED,COMPOSITION,47 ohm,5%,0.25W.. (80009 No. 315-0470-00)	6	
-47	CB4735	01121	. RESISTOR,FIXED,COMPOSITION,47k ohm,5%,0.25W. (80009 No. 315-0473-00)	12	
-48	CB5145	01121	. RESISTOR,FIXED,COMPOSITION,510k ohm,5%,0.25W (80009 No. 315-0514-00)	1	
-49	CB5615	01121	. RESISTOR,FIXED,COMPOSITION,560 ohm,5%,0.25W. (80009 No. 315-0561-00)	2	
-50	CB6205	01121	. RESISTOR,FIXED,COMPOSITION,62 ohm,5%,0.25W.. (80009 No. 315-0620-00)	2	
-51	CB6215	01121	. RESISTOR,FIXED,COMPOSITION,620 ohm,5%,0.25W. (80009 No. 315-0621-00)	2	
-52	CB6815	01121	. RESISTOR,FIXED,COMPOSITION,680 ohm,5%,0.25W. (80009 No. 315-0681-00)	1	
-53	CB7505	01121	. RESISTOR,FIXED,COMPOSITION,75 ohm,5%,0.25W.. (80009 No. 315-0750-00)	3	
-54	CB9135	01121	. RESISTOR,FIXED,COMPOSITION,91k ohm,5%,0.25W. (80009 No. 315-0913-00)	1	
-54.1	BB1015	01121	. RESISTOR,FIXED,COMPOSITION,100 ohm,5%,0.125W (80009 No. 317-0101-00)	4	
-55	MFF1816G26700F	91637	. RESISTOR,FIXED,FILM,2.67k ohm,1%,0.125W..... (80009 No. 321-0234-00)	12	

FIG. & INDEX NO.	PART NUMBER	FSCM	1 2 3 4 5 6 7 DESCRIPTION	UNITS PER ASSY	USABLE ON CODE
8-8-56	MFF1816G15000F	91637	. RESISTOR,FIXED,FILM,1.5k ohm,1%,0.125W..... (80009 No. 321-0210-00)	10	
-57	47357	22526	. CONTACT,ELECTRICAL,0.365 inch long (80009... No. 131-0608-00)	35	
-58	C930802	01295	. SOCKET,PLUG-IN,microcircuit,8 contact (80009 No. 136-0514-00)	1	
-59	C932002	73803	. SOCKET,PLUG-IN,20 lead,DIP,circuit board.... mount (80009 No. 136-0634-00)	2	
-60	351-0448-01	80009	. GUIDE,SWITCH,with roller and spring.....	4	
-61	211-0240-00	80009	. SCREW,ASSEMBLED WASHER,4-40 X 0.688 inch,... pnh,steel (AP)	2	
-62	210-0551-00	80009	. NUT,PLAIN,HEXAGON,4-40 X 0.25 inch,steel.... (AP)	2	
-63	214-1126-02	80009	. . SPRING,FLAT,red colored.....	4	
-64	214-1127-00	80009	. . ROLLER,DETENT,0.125 OD X 0.125 inch long..	4	
-65	361-0608-00	80009	. SPACER,PUSH SWITCH,plastic.....	2	

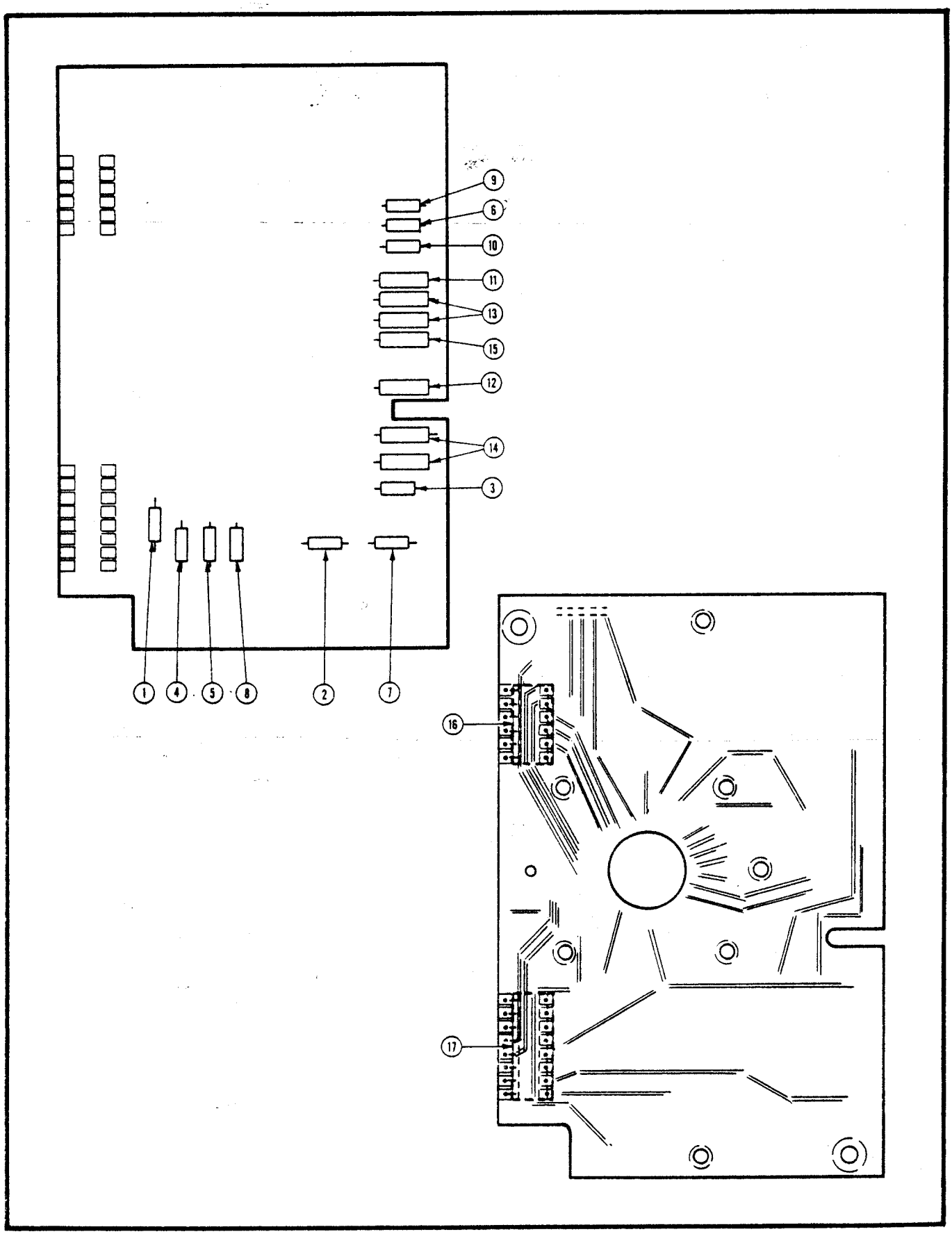

Figure 8-9. A9 Circuit Board Assembly, A Timing (sheet 1 of 2).

FIG. & INDEX NO.	PART NUMBER	FSCM	1 2 3 4 5 6 7 DESCRIPTION	UNITS PER ASSY	USABLE ON CODE
8-9-	670-4848-00	80009	CIRCUIT BOARD ASSEMBLY,A Timing, NHA Figure... 7-40	REF	
-1	152-0217-00	80009	. SEMICONDUCTOR DEVICE,zener,0.4W,8.2V,5%.....	1	
-2	390049X5P0680K	72982	. CAPACITOR,FIXED,CERAMIC DIELECTRIC,68pF,10%, 100V (80009 No. 281-0785-00)	1	
-3	390049X5P0151K	72982	. CAPACITOR,FIXED,CERAMIC DIELECTRIC,150pF,... 10%,100V (80009 No. 281-0786-00)	1	
-4	CB1335	01121	. RESISTOR,FIXED,COMPOSITION,13k ohm,5%,0.25W. (80009 No. 315-0133-00)	1	
-5	CB2235	01121	. RESISTOR,FIXED,COMPOSITION,22k ohm,5%,0.25W. (80009 No. 315-0223-00)	1	
-6	CB2245	01121	. RESISTOR,FIXED,COMPOSITION,220k ohm,5%,..... 0.25W (80009 No. 315-0224-00)	1	
-7	CB3915	01121	. RESISTOR,FIXED,COMPOSITION,390 ohm,5%,0.25W. (80009 No. 315-0391-00)	1	
-8	CB3935	01121	. RESISTOR,FIXED,COMPOSITION,39k ohm,5%,0.25W. (80009 No. 315-0393-00)	1	
-9	CB2255	01121	. RESISTOR,FIXED,COMPOSITION,2.2m ohm,5%,0.25W (80009 No. 315-0225-00)	1	
-10	CB9135	01121	. RESISTOR,FIXED,COMPOSITION,91k ohm,5%,0.25W. (80009 No. 315-0913-00)	1	
-11	MFF1816D75001B	91637	. RESISTOR,FIXED,FILM,75k ohm,0.1%,0.125W..... (80009 No. 321-0373-04)	1	
-12	MFF1816D75002B	91637	. RESISTOR,FIXED,FILM,750k ohm,0.1%,0.125W.... (80009 No. 321-0469-04)	1	
-13	MFF1816D37501B	91637	. RESISTOR,FIXED,FILM,37.5k ohm,0.1%,0.125W... (80009 No. 321-1651-04)	2	
-14	MFF1816D37502B	91637	. RESISTOR,FIXED,FILM,375k ohm,0.1%,0.125W.... (80009 No. 321-1652-04)	2	
-15	HMF188D22503B	91637	. RESISTOR,FIXED,FILM,2.25M ohm,0.1%,0.125W... (80009 No. 321-1653-04)	1	
-16	1-380949-6	00779	. CONNECTOR,RECEPTACLE,6 pin female (80009 No. 136-0547-00)	1	
-17	1-380949-8	00779	. SOCKET,PLUG-IN,8 pin female (80009 No..... 136-0632-00)	1	

For Service Manuals Contact
MAURITRON TECHNICAL SERVICES
8 Cherry Tree Rd, Chinnor
Oxon OX9 4QY
Tel:- 01844-351694 Fax:- 01844-352554
Email:- enquiries@mauritron.co.uk

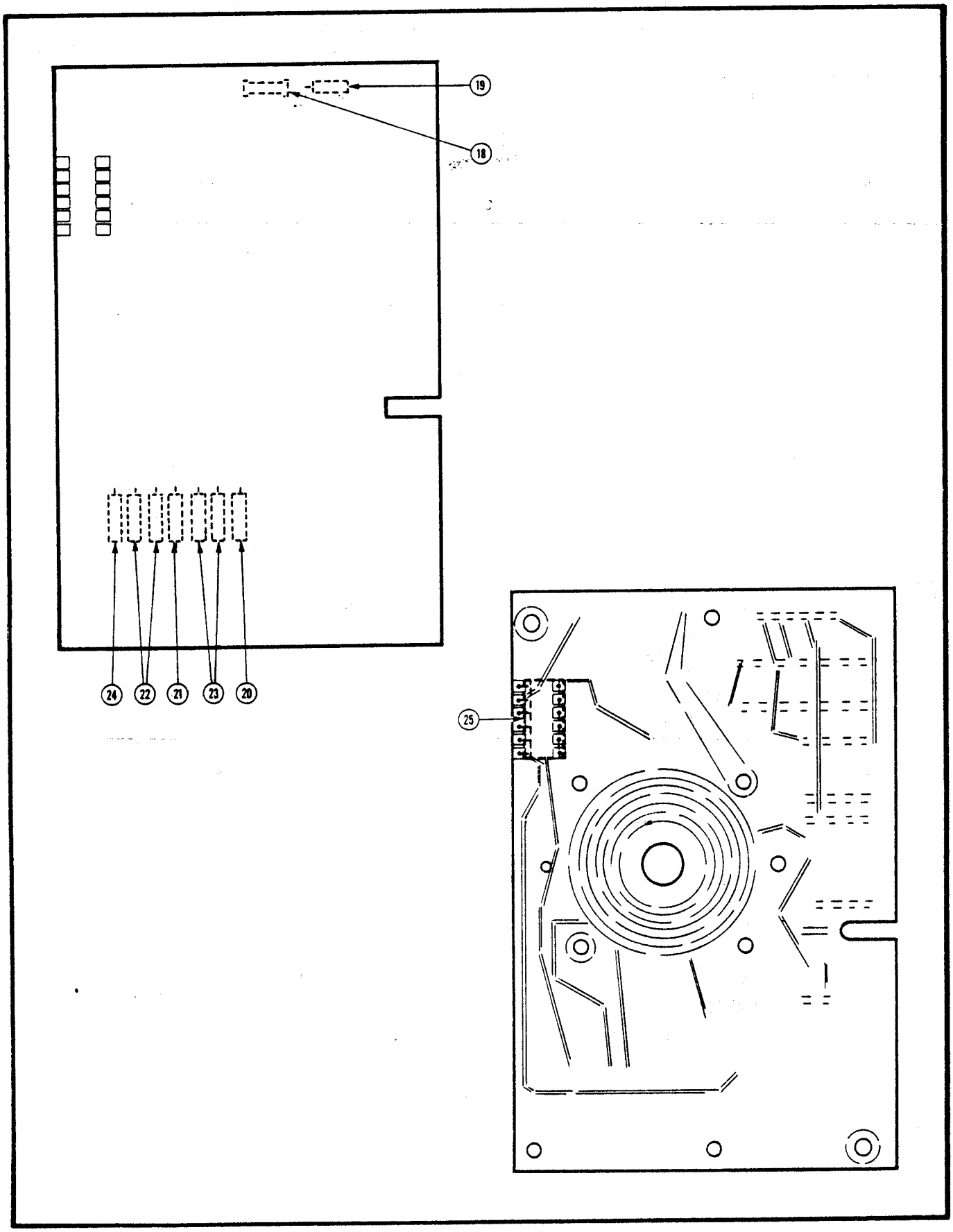

Figure 8-9. A10 Circuit Board Assembly, B Timing (sheet 2 of 2).

FIG. & INDEX NO.	PART NUMBER	FSCM	1 2 3 4 5 6 7 DESCRIPTION	UNITS PER ASSY	USABLE ON CODE
8-9-	670-3551-02	80009	CIRCUIT BOARD ASSEMBLY,B Timing,NHA Figure.... 7-49	REF	
-18	301-000U2J0680K	72982	. CAPACITOR,FIXED,CERAMIC DIELECTRIC,68pF,10%, 500V (80009 No. 281-0549-00)	1	
-19	CB3915	01121	. RESISTOR,FIXED,COMPOSITION,390 ohm,5%,0.25W. (80009 No. 315-0391-00)	1	
-20	MFF1816D75001B	91637	. RESISTOR,FIXED,FILM,75k ohm,0.1%,0.125W..... (80009 No. 321-0373-04)	1	
-21	MFF1816D75002B	91637	. RESISTOR,FIXED,FILM,750k ohm,0.1%,0.125W.... (80009 No. 321-0469-04)	1	
-22	MFF1816D37501B	91637	. RESISTOR,FIXED,FILM,37.5k ohm,0.1%,0.125W... (80009 No. 321-1651-04)	2	
-23	MFF1816D37502B	91637	. RESISTOR,FIXED,FILM,375k ohm,0.1%,0.125W.... (80009 No. 321-1652-04)	2	
-24	HMF188D22503B	91637	. RESISTOR,FIXED,FILM,2.25M ohm,0.1%,0.125W... (80009 No. 321-1653-04)	1	
-25	1-380949-6	00779	. CONNECTOR,RECEPTACLE,6 pin female (80009.... No. 136-0547-00)	1	

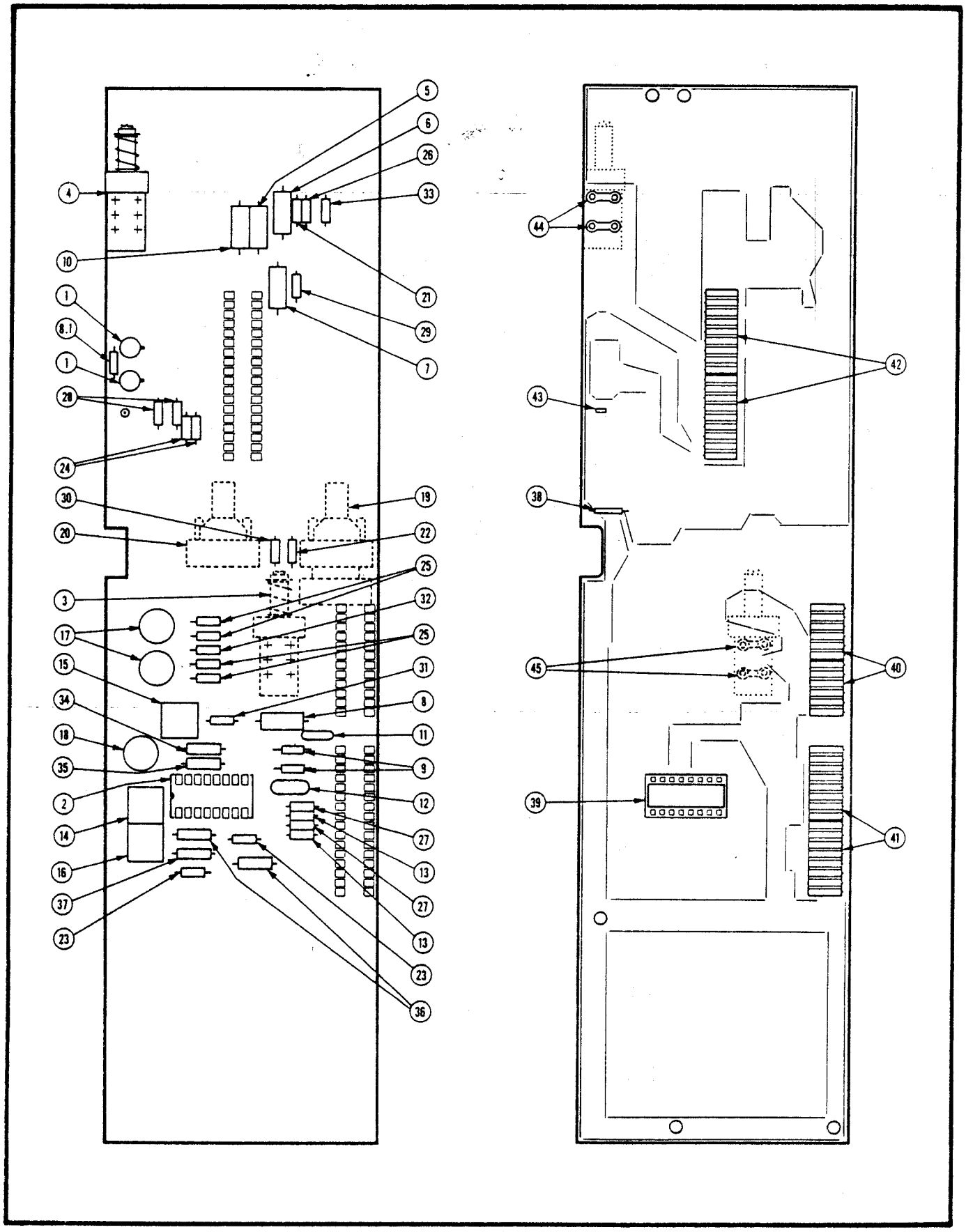

Figure 8-10. A6 Circuit Board Assembly, Horizontal.

FIG. & INDEX NO.	PART NUMBER	FSCM	1 2 3 4 5 6 7 DESCRIPTION	UNITS PER ASSY	USABLE ON CODE
8-10-	670-4855-00	80009	CIRCUIT BOARD ASSEMBLY,Horizontal,NHA Figure.. 7-57	REF	
-1	2N3906	01295	. TRANSISTOR,silicon,PNP (80009 No..... 151-0188-00)	2	
-2	155-0124-00	80009	. MICROCIRCUIT,LINEAR,Horizontal Preamplifier.	1	
-3	260-1453-00	80009	. SWITCH,PUSH,1 button.....	1	
-4	260-1771-00	71590	. SWITCH,PUSH,1 button,DPDT.....	1	
-5	314-011C0K189B	72982	. CAPACITOR,FIXED,CERAMIC DIELECTRIC,1.8pF,... 0.1%,100V (80009 No. 281-0755-00)	1	
-6	314-011C0G220K	72982	. CAPACITOR,FIXED,CERAMIC DIELECTRIC,22pF,.... 10%,500V (80009 No. 281-0760-00)	1	
-7	314022X5P0101J	72982	. CAPACITOR,FIXED,CERAMIC DIELECTRIC,100pF,5%, 100V (80009 No. 281-0765-00)	1	
-8	314022X5P0102M	72982	. CAPACITOR,FIXED,CERAMIC DIELECTRIC,0.001UF,. 20%,100V (80009 No. 281-0770-00)	1	
-8.1	8005-D-C0G-150K	72982	. CAPACITOR,FIXED,CERAMIC DIELECTRIC,15pF,10%, 100V (80009 No. 281-0797-00)	1	
-9	8005D9AABZ5U104M	72982	. CAPACITOR,FIXED,CERAMIC DIELECTRIC,0.1UF,... 20%,50V (80009 No. 281-0775-00)	2	
-10	314-011C0G150J	72982	. CAPACITOR,FIXED,CERAMIC DIELECTRIC,15pF,5%,. 500V (80009 No. 281-0787-00)	1	
-11	36C600	56289	. CAPACITOR,FIXED,CERAMIC DIELECTRIC,0.1UF,... +80-20%,25V (80009 No. 283-0081-00)	1	
-12	D155F201F0	00853	. CAPACITOR,FIXED,MICA DIELECTRIC,200pF,1%,... 500V (80009 No. 283-0672-00)	1	
-13	CB47G5	01121	. RESISTOR,FIXED,COMPOSITION,4.7 ohm,5%,0.25W. (80009 No. 307-0106-00)	2	
-14	3386F-T04-101	32997	. RESISTOR,VARIABLE,NONWIRE WOUND,100 ohm,20%, 0.50W (80009 No. 311-1222-00)	1	
-15	3386F-T04-501	32997	. RESISTOR,VARIABLE,NONWIRE WOUND,500 ohm,.... 20%,0.50W (80009 No. 311-1224-00)	1	
-16	3386F-T04-102	32997	. RESISTOR,VARIABLE,NONWIRE WOUND,1k ohm,20%,. 0.50W (80009 311-1225-00)	1	
-17	91A-10001M	73138	. RESISTOR,VARIABLE,NONWIRE WOUND,10k ohm,20%, 0.50W (80009 No. 311-1559-00)	2	
-18	91A-50000M	73138	. RESISTOR,VARIABLE,NONWIRE WOUND,5k ohm,5%,.. 0.50W (80009 No. 311-1560-00)	1	
-19	381-CM40951	12697	. RESISTOR,VARIABLE,NONWIRE WOUND,2.5k ohm,... 5%,2W (80009 No. 311-1722-00)	1	
-20	381-CM40943	80294	. RESISTOR,VARIABLE,NONWIRE WOUND,1M ohm,20%,. 2W (80009 No. 311-1728-00)	1	
-21	CB1055	01121	. RESISTOR,FIXED,COMPOSITION,1M ohm,5%,0.25W.. (80009 No. 315-0105-00)	1	
-22	CB1125	01121	. RESISTOR,FIXED,COMPOSITION,1.1k ohm,5%,0.25W (80009 No. 315-0112-00)	1	
-23	CB1835	01121	. RESISTOR,FIXED,COMPOSITION,18k ohm,5%,0.25W. (80009 No. 315-0183-00)	2	
-24	CB1005	01121	. RESISTOR,FIXED,COMPOSITION,10 ohm,5%,0.25W.. (80009 No. 315-0100-00)	2	
-25	CB2235	01121	. RESISTOR,FIXED,COMPOSITION,22k ohm,5%,0.25W. (80009 No. 315-0223-00)	4	

FIG. & INDEX NO.	PART NUMBER	FSCM	1 2 3 4 5 6 7 DESCRIPTION	UNITS PER ASSY	USABLE ON CODE
8-10-26	CB3355	01121	. RESISTOR,FIXED,COMPOSITION,3.3M ohm,5%,0.25W (80009 No. 315-0335-00)	1	
-27	CB4705	01121	. RESISTOR,FIXED,COMPOSITION,47 ohm,5%,0.25W.. (80009 No. 315-0470-00)	2	
-28	CB6815	01121	. RESISTOR,FIXED,COMPOSITION,680 ohm,5%,0.25W. (80009 No. 315-0681-00)	2	
-29	CB5145	01121	. RESISTOR,FIXED,COMPOSITION,510 k ohm,5%,.... 0.25W (80009 No. 315-0514-00)	1	
-30	CB7525	01121	. RESISTOR,FIXED,COMPOSITION,7.5k ohm,5%,0.25W (80009 No. 315-0752-00)	1	
-31	CB8205	01121	. RESISTOR,FIXED,COMPOSITION,82 ohm,5%,0.25W.. (80009 No. 315-0820-00)	1	
-32	CB9115	01121	. RESISTOR,FIXED,COMPOSITION,910 ohm,5%,0.25W. (80009 No. 315-0911-00)	1	
-33	CB9135	01121	. RESISTOR,FIXED,COMPOSITION,91k ohm,5%,0.25W. (80009 No. 315-0913-00)	1	
-34	MFF1816G130R0F	91637	. RESISTOR,FIXED,FILM,130 ohm,1%,0.125W..... (80009 No. 321-0108-00)	1	
-35	MFF1816G16900F	91637	. RESISTOR,FIXED,FILM,1.69k ohm,1%,0.125W..... (80009 No. 321-0215-00)	1	
-36	MFF1816G11501F	91637	. RESISTOR,FIXED,FILM,11.5k ohm,1%,0.125W..... (80009 No. 321-0295-00)	2	
-37	MFF1816G26101F	91637	. RESISTOR,FIXED,FILM,26.1k ohm,1%,0.125W..... (80009 No. 321-0329-00)	1	
-38	131-0566-00	80009	. LINK,TERMINAL CONNECTOR,0.086 OD X 2.375.... inch long	1	
-39	C931602	01295	. SOCKET,PLUG-IN,16 contact,low clearance..... (80009 No. 136-0260-02)	1	
-40	1-380949-6	00779	. CONNECTOR,6 pin,female (80009 No..... 136-0547-00)	2	
-41	1-380949-8	00779	. SOCKET,PLUG-IN,8 pin,female (80009 No..... 136-0632-00)	2	
-42	1-380949-9	00779	. SOCKET,PLUG-IN,9 pin female (80009 No..... 136-0631-00)	2	
-43	214-0579-00	80009	. TERMINAL,TEST POINT,0.40 inch long.....	2	
-44	361-0384-00	80009	. SPACER,PUSH BUTTON SWITCH,0.133 inch long...	2	
-45	361-0608-00	80009	. SPACER,PUSH BUTTON SWITCH,plastic.....	2	

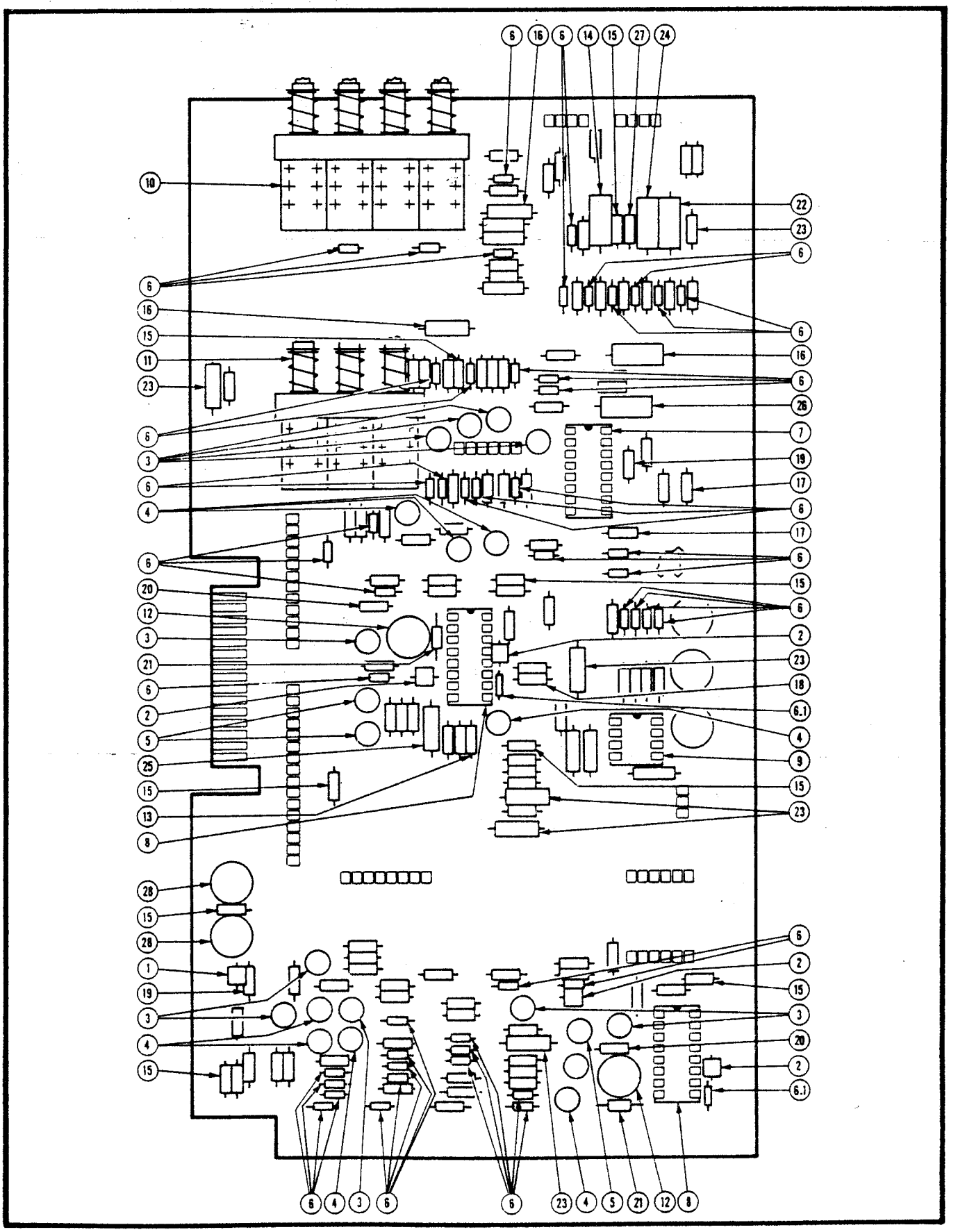

Figure 8-11. A8 Circuit Board Assembly, Sweep (sheet 1 of 3).

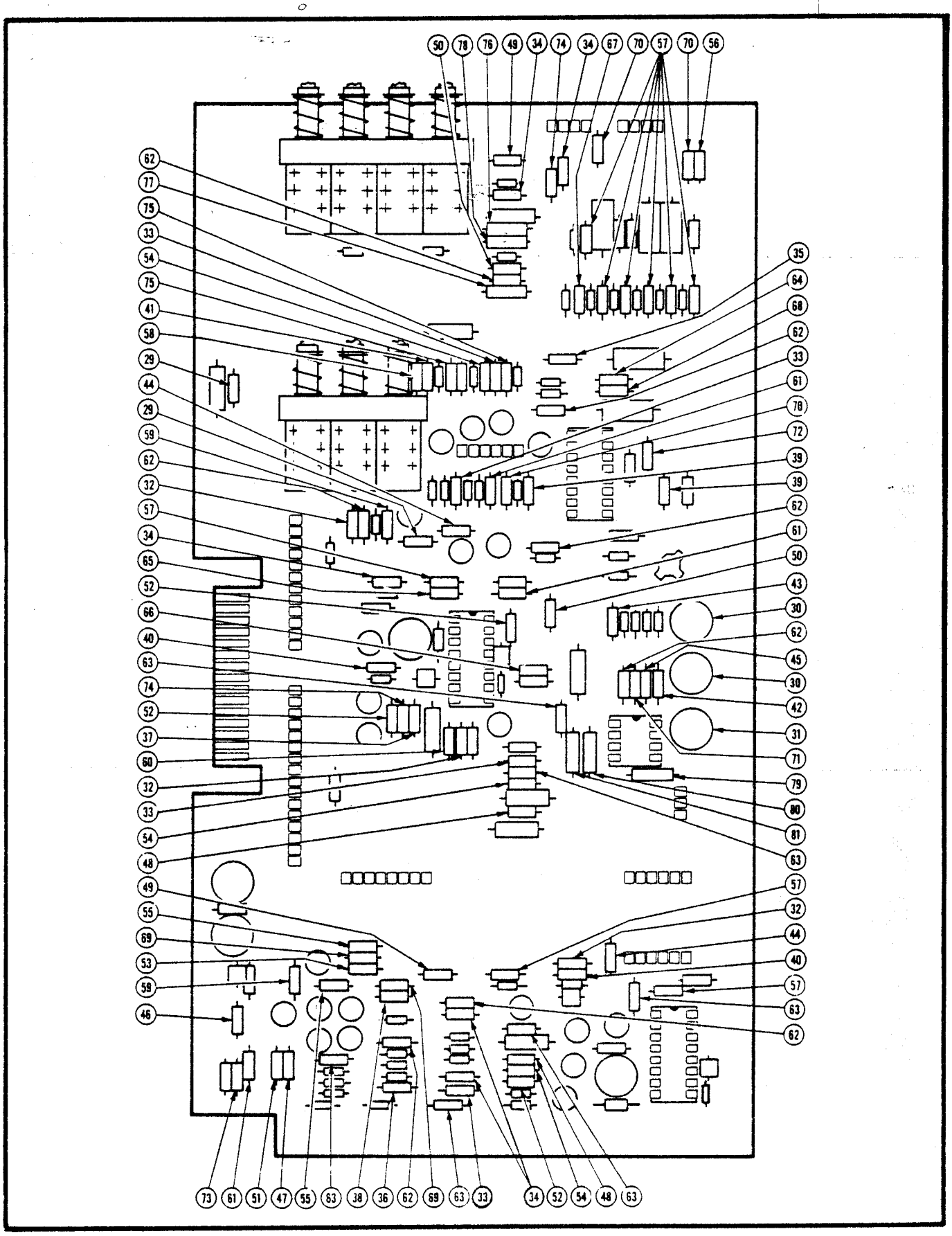

Figure 8-11. A8 Circuit Board Assembly, Sweep (sheet 2 of 3).

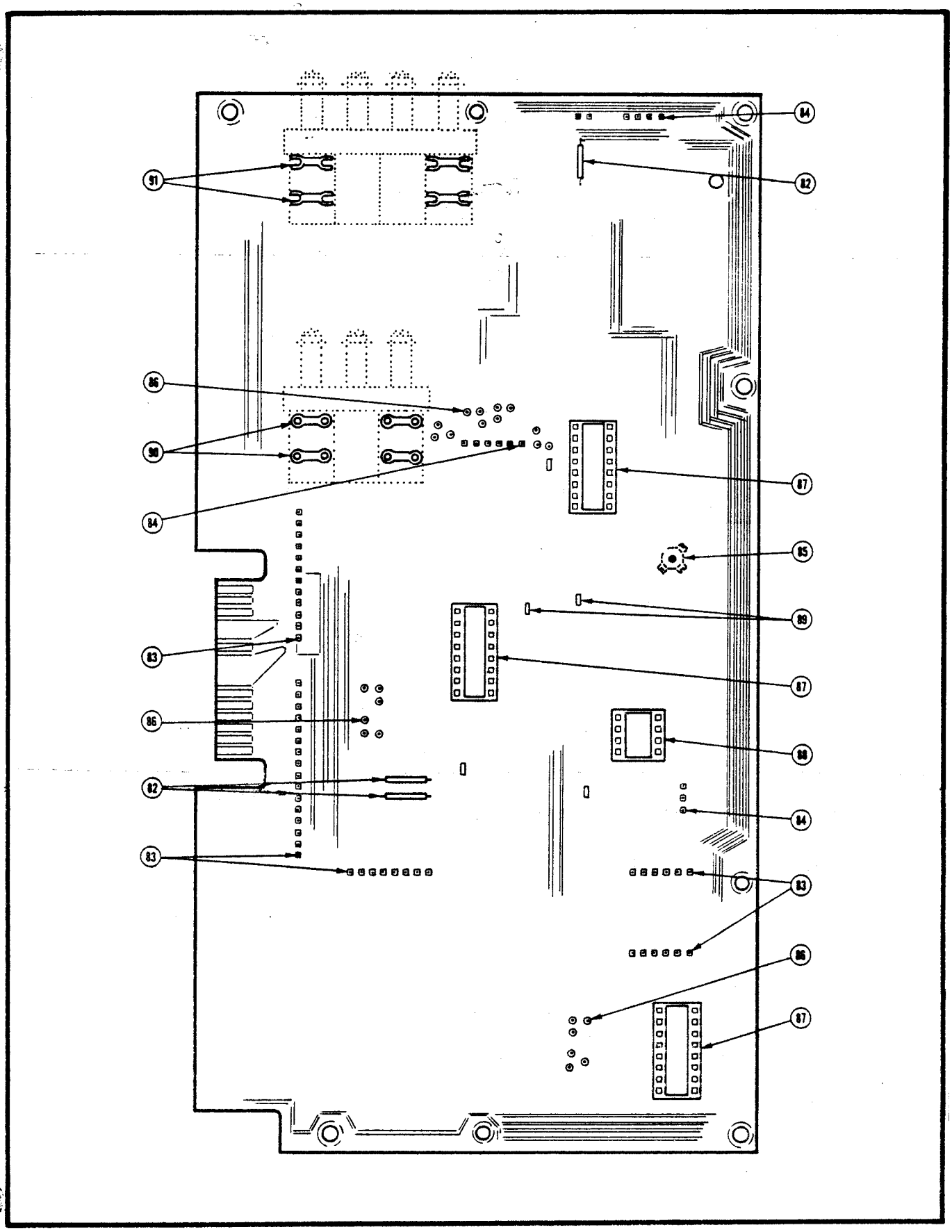

Figure 8-11. A8 Circuit Board Assembly, Sweep (sheet 3 of 3).

FIG. & INDEX NO.	PART NUMBER	FSCM	1 2 3 4 5 6 7 DESCRIPTION	UNITS PER ASSY	USABLE ON CODE
8-11-	670-4846-00	80009	CIRCUIT BOARD ASSEMBLY,Sweep,NHA Figure 7-60..	REF	
-1	108-0724-00	80009	. COIL,RADIO FREQUENCY,12.5NH.....	1	
-2	57-0180-7D-500B	78488	. SHIELDING BEAD,0.6UH (80009 No. 276-0507-00)	4	
-3	2N3906	01295	. TRANSISTOR,silicon,PNP (80009 No..... 151-0188-00)	10	
-4	151-0190-00	80009	. TRANSISTOR,silicon,NPN.....	8	
-5	151-1042-00	80009	. SEMICONDUCTOR DEVICE,selected,matched pair,. FET	2	
-6	1N4152R	01295	. SEMICONDUCTOR DEVICE,silicon,30V,150MA..... (80009 No. 152-0141-02)	48	
-6.1	152-0061-00	80009	. SEMICONDUCTOR DEVICE,silicon,175V,0.1A.....	2	
-7	155-0122-00	80009	. MICROCIRCUIT,DIGITAL,A and B logic,200 ohm.. per square	1	
-8	155-0123-00	80009	. MICROCIRCUIT,LINEAR,A and B sweep/pickoff...	2	
-9	156-0158-00	80009	. MICROCIRCUIT,LINEAR,dual operational..... amplifier	1	
-10	260-1802-00	80009	. SWITCH,PUSH,4 button,2 pole,interlock.....	1	
-11	260-1720-00	80009	. SWITCH,PUSH,3 button.....	1	
-12	538-011B7-25	72982	. CAPACITOR,VARIABLE,CERAMIC DIELECTRIC,..... 7-25pF,350V (80009 No. 281-0160-00)	2	
-13	390049X5P0470K	72982	. CAPACITOR,FIXED,CERAMIC DIELECTRIC,47pF,.... 10%,100V (80009 No. 281-0763-00)	1	
-14	314022X5P0102M	72982	. CAPACITOR,FIXED,CERAMIC DIELECTRIC,0.001UF,. 20%,100V (80009 No. 281-0770-00)	1	
-15	8005H9AADW5R103K	72982	. CAPACITOR,FIXED,CERAMIC DIELECTRIC,0.01UF,.. 10%,100V (80009 No. 281-0773-00)	8	
-16	8005D9AABZ5U104M	72982	. CAPACITOR,FIXED,CERAMIC DIELECTRIC,0.1UF,... 20%,50V (80009 No. 281-0775-00)	3	
-17	390049X5P0680K	72982	. CAPACITOR,FIXED,CERAMIC DIELECTRIC,68PF,10%, 100V (80009 No. 281-0785-00)	2	
-18	390049X5P0151K	72982	. CAPACITOR,FIXED,CERAMIC DIELECTRIC,150pF,... 10%,100V (80009 No. 281-0786-00)	1	
-19	8005H9AADW5R471K	72982	. CAPACITOR,FIXED,CERAMIC DIELECTRIC,470pF,... 10%,100V (80009 No. 281-0788-00)	2	
-20	8005-D-COG-150K	72982	. CAPACITOR,FIXED,CERAMIC DIELECTRIC,15pF,.... 10%,100V (80009 No. 281-0797-00)	2	
-21	C40A820J	16546	CAPACITOR,FIXED,CERAMIC DIELECTRIC,82pF,5%,... 100V (80009 No. 281-0816-00)	2	
-22	PT605C473M	19396	. CAPACITOR,FIXED,PLASTIC,0.047UF,20%,200V.... (80009 No. 285-1099-00)	1	
-23	162D225X0020CD2	56289	. CAPACITOR,FIXED,ELECTROLYTIC,2.2UF,20%,20V.. (80009 No. 290-0136-00)	6	
-24	150D106X0015B2	56289	. CAPACITOR,FIXED,ELECTROLYTIC,10UF,20%,15V... (80009 No. 290-0167-00)	1	
-25	162D105X0035CD2	56289	. CAPACITOR,FIXED,ELECTROLYTIC,1UF,20%,35V.... (80009 No. 290-0267-00)	1	
-26	162D274X9035BC2	56289	. CAPACITOR,FIXED,ELECTROLYTIC,0.27UF,10%,35V. (80009 No. 290-0288-00)	1	
-27	150D564X0100A2	56289	. CAPACITOR,FIXED,ELECTROLYTIC,0.56UF,20%,100V (80009 No. 290-0327-00)	1	
-28	502D226	56289	. CAPACITOR,FIXED,ELECTROLYTIC,47UF,+50-10%,.. 16V (80009 No. 290-0746-00)	2	

FIG. & INDEX NO.	PART NUMBER	FSCM	1 2 3 4 5 6 7 DESCRIPTION	UNITS PER ASSY	USABLE ON CODE
8-11-29	CB47G5	01121	. RESISTOR,FIXED,COMPOSITION,4.7 ohm,5%,0.25W. (80009 No. 307-0106-00)	2	
-30	91A-10001M	73138	. RESISTOR,VARIABLE,NONWIRE WOUND,10k ohm,20%, 0.50W (80009 No. 311-1559-00)	2	
-31	91A-25000M	73138	. RESISTOR,VARIABLE,NONWIRE WOUND,2.5k ohm,... 20%,0.50W (80009 No. 311-1561-00)	1	
-32	CB1015	01121	. RESISTOR,FIXED,COMPOSITION,100 ohm,5%,0.25W. (80009 No. 315-0101-00)	3	
-33	CB1025	01121	. RESISTOR,FIXED,COMPOSITION,1k ohm,5%,0.25W.. (80009 No. 315-0102-00)	4	
-34	CB1035	01121	. RESISTOR,FIXED,COMPOSITION,10k ohm,5%,0.25W. (80009 No. 315-0103-00)	5	
-35	CB1045	01121	. RESISTOR,FIXED,COMPOSITION,100k ohm,5%,0.25W (80009 No. 315-0104-00)	1	
-36	CB1125	01121	. RESISTOR,FIXED,COMPOSITION,1.1k ohm,5%,0.25W (80009 No. 315-0112-00)	1	
-37	CB1135	01121	. RESISTOR,FIXED,COMPOSITION,11k ohm,5%,0.25W. (80009 No. 315-0113-00)	1	
-38	CB1215	01121	. RESISTOR,FIXED,COMPOSITION,120 ohm,5%,0.25W. (80009 No. 315-0121-00)	1	
-39	CB1225	01121	. RESISTOR,FIXED,COMPOSITION,1.2k ohm,5%,0.25W (80009 No. 315-0122-00)	2	
-40	CB1235	01121	. RESISTOR,FIXED,COMPOSITION,12k ohm,5%,0.25W. (80009 No. 315-0123-00)	2	
-41	CB1325	01121	. RESISTOR,FIXED,COMPOSITION,1.3k ohm,5%,0.25W (80009 No. 315-0132-00)	1	
-42	CB1525	01121	. RESISTOR,FIXED,COMPOSITION,1.5k ohm,5%,0.25W (80009 No. 315-0152-00)	1	
-43	CB1535	01121	. RESISTOR,FIXED,COMPOSITION,15k ohm,5%,0.25W. (80009 No. 315-0153-00)	1	
-44	CB1825	01121	. RESISTOR,FIXED,COMPOSITION,1.8k ohm,5%,0.25W (80009 No. 315-0182-00)	2	
-45	CB1835	01121	. RESISTOR,FIXED,COMPOSITION,18k ohm,5%,0.25W. (80009 No. 315-0183-00)	1	
-46	CB2005	01121	. RESISTOR,FIXED,COMPOSITION,20 ohm,5%,0.25W.. (80009 No. 315-0200-00)	1	
-47	CB2015	01121	. RESISTOR,FIXED,COMPOSITION,200 ohm,5%,0.25W. (80009 No. 315-0201-00)	1	
-48	CB2035	01121	. RESISTOR,FIXED,COMPOSITION,20k ohm,5%,0.25W. (80009 No. 315-0203-00)	2	
-49	CB2215	01121	. RESISTOR,FIXED,COMPOSITION,220 ohm,5%,0.25W. (80009 No. 315-0221-00)	2	
-50	CB2225	01121	. RESISTOR,FIXED,COMPOSITION,2.2k ohm,5%,0.25W (80009 No. 315-0222-00)	2	
-51	CB2235	01121	. RESISTOR,FIXED,COMPOSITION,22k ohm,5%,0.25W. (80009 No. 315-0223-00)	1	
-52	CB2725	01121	. RESISTOR,FIXED,COMPOSITION,2.7k ohm,5%,0.25W (80009 No. 315-0272-00)	3	
-53	CB3015	01121	. RESISTOR,FIXED,COMPOSITION,300 ohm,5%,0.25W. (80009 No. 315-0301-00)	1	

FIG. & INDEX NO.	PART NUMBER	FSCM	1 2 3 4 5 6 7 DESCRIPTION	UNITS PER ASSY	USABLE ON CODE
8-11-54	CB3035	01121	. RESISTOR,FIXED,COMPOSITION,30k ohm,5%,0.25W. (80009 No. 315-0303-00)	3	
-55	CB3305	01121	. RESISTOR,FIXED,COMPOSITION,33 ohm,5%,0.25W.. (80009 No. 315-0330-00)	2	
-56	CB3315	01121	. RESISTOR,FIXED,COMPOSITION,330 ohm,5%,0.25W. (80009 No. 315-0331-00)	1	
-57	CB3325	01121	. RESISTOR,FIXED,COMPOSITION,3.3k ohm,5%,0.25W (80009 No. 315-0332-00)	9	
-58	CB3625	01121	. RESISTOR,FIXED,COMPOSITION,3.6k ohm,5%,0.25W (80009 No. 315-0362-00)	1	
-59	CB3915	01121	. RESISTOR,FIXED,COMPOSITION,390 ohm,5%,0.25W. (80009 No. 315-0391-00)	2	
-60	CB4705	01121	. RESISTOR,FIXED,COMPOSITION,47 ohm,5%,0.25W.. (80009 No. 315-0470-00)	1	
-61	CB4715	01121	. RESISTOR,FIXED,COMPOSITION,470 ohm,5%,0.25W. (80009 No. 315-0471-00)	3	
-62	CB4725	01121	. RESISTOR,FIXED,COMPOSITION,4.7k ohm,5%,0.25W (80009 No. 315-0472-00)	7	
-63	CB4735	01121	. RESISTOR,FIXED,COMPOSITION,47k ohm,5%,0.25W. (80009 No. 315-0473-00)	6	
-64	CB4745	01121	. RESISTOR,FIXED,COMPOSITION,470 k ohm,5%,.... 0.25W (80009 No. 315-0474-00)	1	
-65	CB4755	01121	. RESISTOR,FIXED,COMPOSITION,4.7M ohm,5%,0.25W (80009 No. 315-0475-00)	1	
-66	CB5605	01121	. RESISTOR,FIXED,COMPOSITION,56 ohm,5%,0.25W.. (80009 No. 315-0560-00)	1	
-67	CB5635	01121	. RESISTOR,FIXED,COMPOSITION,56k ohm,5%,0.25W. (80009 No. 315-0563-00)	1	
-68	CB5645	01121	. RESISTOR,FIXED,COMPOSITION,560k ohm,5%,0.25W (80009 No. 315-0564-00)	1	
-69	CB6225	01121	. RESISTOR,FIXED,COMPOSITION,6.2k ohm,5%,0.25W (80009 No. 315-0622-00)	2	
-70	CB6815	01121	. RESISTOR,FIXED,COMPOSITION,680 ohm,5%,0.25W. (80009 No. 315-0681-00)	3	
-71	CB6845	01121	. RESISTOR,FIXED,COMPOSITION,680k ohm,5%,0.25W (80009 No. 315-0684-00)	1	
-72	CB7525	01121	. RESISTOR,FIXED,COMPOSITION,7.5k ohm,5%,0.25W (80009 No. 315-0752-00)	1	
-73	CB8215	01121	. RESISTOR,FIXED,COMPOSITION,820 ohm,5%,0.25W. (80009 No. 315-0821-00)	1	
-74	CB8225	01121	. RESISTOR,FIXED,COMPOSITION,8.2k ohm,5%,0.25W (80009 No. 315-0822-00)	2	
-75	CB9105	01121	. RESISTOR,FIXED,COMPOSITION,91 ohm,5%,0.25W.. (80009 No. 315-0910-00)	2	
-76	MFF1816G22100F	91637	. RESISTOR,FIXED,FILM,2.21k ohm,1%,0.125W..... (80009 No. 321-0226-00)	1	
-77	MFF1816G23700F	91637	. RESISTOR,FIXED,FILM,2.37k ohm,1%,0.125W..... (80009 No. 321-0229-00)	1	
-78	MFF1816G33200F	91637	. RESISTOR,FIXED,FILM,3.32k ohm,1%,0.125W..... (80009 No. 321-0243-00)	1	

FIG. & INDEX NO.	PART NUMBER	FSCM	1 2 3 4 5 6 7 DESCRIPTION	UNITS PER ASSY	USABLE ON CODE
8-11-79	MFF1816G45300F	91637	. RESISTOR,FIXED,FILM,4.53k ohm,1%,0.125W..... (80009 No. 321-0256-00)	1	
-80	MFF1816G56200F	91637	. RESISTOR,FIXED,FILM,5.62k ohm,1%,0.125W..... (80009 No. 321-0265-00)	1	
-81	MFF1816G84501F	91637	. RESISTOR,FIXED,FILM,84.5k ohm,1%,0.125W..... (80009 No. 321-0378-00)	1	
-82	131-0566-00	80009	. LINK,TERMINAL CONNECTOR,0.086 OD X 2.375.... inch long	3	
-83	47350	22526	. CONTACT,ELECTRICAL,0.46 inch long (80009 No. 131-0589-00)	48	
-84	47357	22526	. CONTACT,ELECTRICAL,0.365 inch long (80009.. No. 131-0608-00)	15	
-85	131-1003-00	80009	. CONNECTOR,BODY,circuit board mount,3 prong..	1	
-86	75060-012	22526	. SOCKET,PIN TERMINAL,0.188 inch long (80009.. No. 136-0252-07)	25	
-87	C931602	01295	. SOCKET,PLUG-IN,16 contact,low clearance..... (80009 No. 136-0260-02)	3	
-88	C930802	01295	. SOCKET,PLUG-IN,microcircuit,8 contact (80009 No. 136-0514-00)	1	
-89	214-0579-00	80009	. TERMINAL,TEST POINT,0.40 inch long.....	6	
-90	361-0385-00	80009	. SPACER,PUSH BUTTON SWITCH,0.164 inch long...	4	
-91	J-64281	71590	. SPACER,SWITCH,plastic (80009 No.361-0542-00)	4	

For Service Manuals Contact
MAURITRON TECHNICAL SERVICES
8 Cherry Tree Rd, Chinnor
Oxon OX9 4QY
Tel:- 01844-351694 Fax:- 01844-352554
Email:- enquiries@mauritron.co.uk

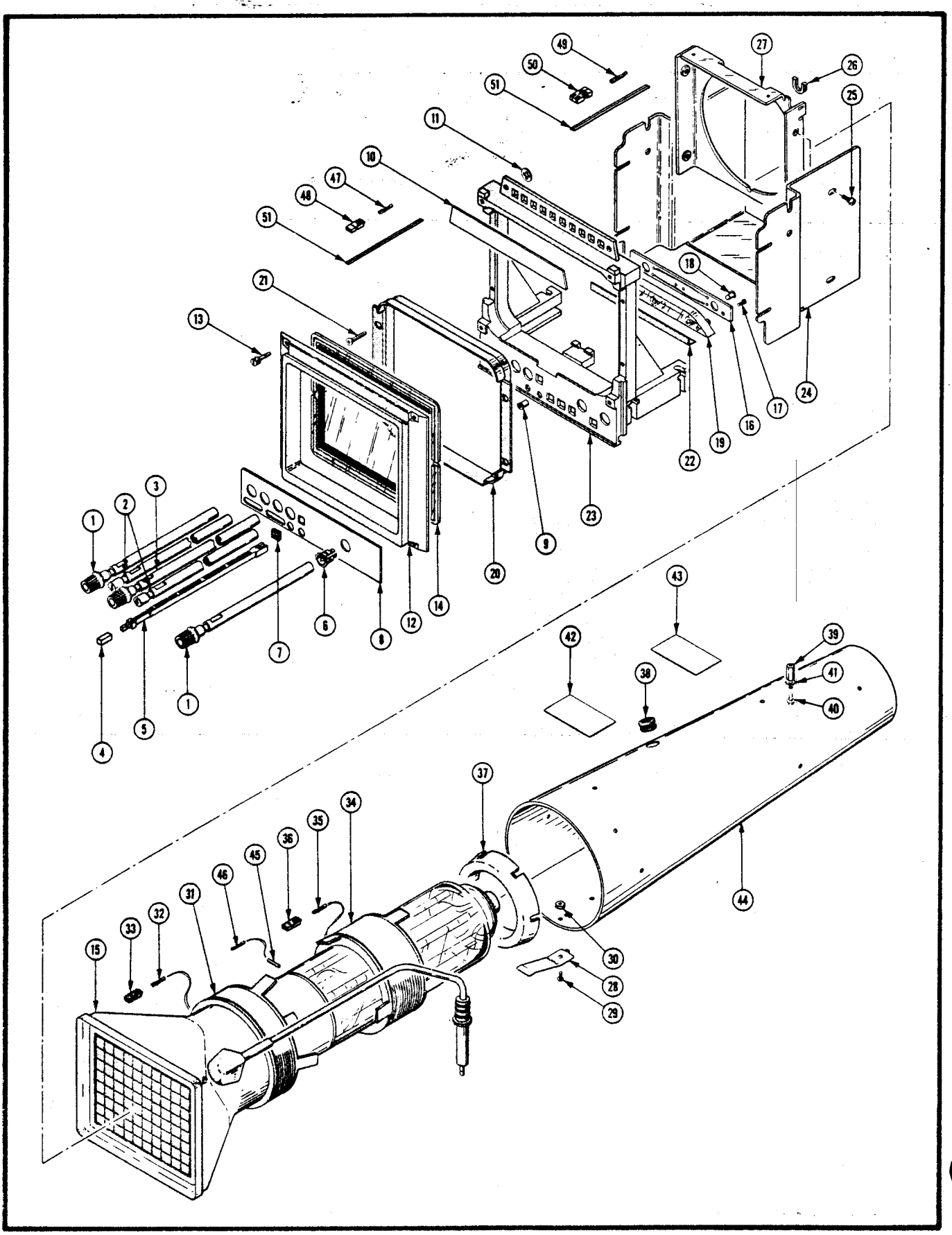

Figure 8-12. Electron Tube Assembly.

FIG. & INDEX NO.	PART NUMBER	FSCM	1 2 3 4 5 6 7 DESCRIPTION	UNITS PER ASSY	USABLE ON CODE
8-12-	----- -----	80009	ELECTRON TUBE ASSEMBLY,NHA Figure 1-7.....	REF	
-1	384-1350-02	80009	. KNOB,0.28 OD X 4.415 inch long,plastic.....	2	
-2	384-1348-00	80009	. EXTENSION SHAFT,0.25 OD X 6.623 inch long,.. plastic	2	
-3	384-1350-00	80009	. EXTENSION SHAFT,0.2 OD X 12.215 inch long,.. with Knob	1	
-4	366-1559-00	80009	. PUSH BUTTON,gray.....	1	
-5	384-1129-00	80009	. EXTENSION SHAFT,5.607 inch long.....	1	
-6	358-0550-00	80009	. BUSHING,SHAFT,0.15 ID X 0.3 inch OD,plastic.	5	
-7	426-1072-00	80009	. FRAME,PUSH BUTTON,plastic.....	1	
-8	333-1994-01	80009	. PANEL,FRONT,electron tube.....	1	
-9	450-4352-01-0318	71279	. JACK,TIP,gray (80009 No. 136-0387-00).....	2	
-10	334-3054-00	80009	. PLATE,IDENTIFICATION.....	1	
-11	354-0195-00	80009	. RING,RETAINING.....	2	
-12	343-0523-00	80009	. RETAINER,IMPLOSION,5.65 X 4.705 inch,plastic	1	
-13	213-0313-00	80009	. . THUMBSCREW,4-40 X 0.45 inch,knurled.....	4	
-14	337-2122-00	80009	. SHIELD,IMPLOSION,blue.....	1	
-15	154-0777-00	80009	. ELECTRON TUBE,P31.....	1	
-16	388-4703-00	80009	. CIRCUIT BOARD,scale illumination.....	1	
-17	211-0001-00	80009	. SCREW,MACHINE,2-56 X 0.25 inch,pnh,steel.... (AP)	2	
-18	2112D	08806	. LAMP,INCANDESCENT,6.3V,200MA (80009 No..... 150-0129-00)	2	
-19	378-0614-00	80009	. REFLECTOR,LIGHT,molded plastic.....	1	
-20	386-3336-00	80009	. SUPPORT,ELECTRON TUBE,front.....	1	
-21	213-0183-00	80009	. SCREW,TAPPING,THREAD FORMING,6-32 X 0.25.... inch,pnh,steel (AP)	4	
-22	337-2262-00	80009	. SHIELD,LIGHT,electron tube scale.....	1	
-23	426-1240-00	80009	. FRAME SECTION,SCOPE,electron tube front..... support	1	
-24	337-2207-00	80009	. SHIELD,ELECTRICAL,vertical and horizontal... support	1	
-25	211-0534-00	80009	. SCREW,ASSEMBLED WASHER,6-32 X 0.312 inch,... pnh,steel (AP)	4	
-26	348-0171-00	80009	. GROMMET,PLASTIC,u-shaped.....	1	
-27	386-3518-00	80009	. SUPPORT,SHIELD,electron tube,front.....	1	
-28	214-2270-00	80009	. SPRING,GROUND,shield to CRT high voltage....	1	
-29	211-0007-00	80009	. SCREW,MACHINE,4-40 X 0.188 inch,pnh,steel... (AP)	1	
-30	210-0586-00	80009	. NUT,PLAIN,EXTENDED WASHER,4-40 X 0.25 inch,. steel (AP)	1	
-31	108-0818-00	80009	. COIL,TUBE DEFLECTION,trace rotation.....	1	
-32	47439	22526	. . CONTACT,ELECTRICAL,0.48 inch long,22-26... AWG wire (80009 No. 131-0707-00)	2	
-33	352-0169-01	80009	. . CONNECTOR BODY,PLUG,ELECTRICAL,2 wire..... brown	1	
-34	108-0819-00	80009	. COIL,TUBE DEFLECTION,x-y alignment..... brown	1	
-35	47439	22526	. . CONTACT,ELECTRICAL,0.48 inch long,22-26... AWG wire (80009 No. 131-0707-00)	2	
-36	352-0169-00	80009	. . CONNECTOR BODY,PLUG,ELECTRICAL,2 wire..... black (80009 No. 352-0169-00)	1	

FIG. & INDEX NO.	PART NUMBER	FSCM	1 2 3 4 5 6 7 DESCRIPTION	UNITS PER ASSY	USABLE ON CODE
8-12-37	386-3305-00	80009	. SUPPORT,ELECTRON TUBE,rear.....	1	
-38	763	70485	. GROMMET,RUBBER,0.281 ID X 0.563 inch OD..... (80009 No. 348-0004-00)	1	
-39	129-0308-00	80009	. POST,ELECTRICAL-MECHANICAL,0.25 hex X 0.465. inch long	1	
-40	211-0116-00	80009	. SCREW,ASSEMBLED WASHER,4-40 X 0.312 inch,... pnh,brass (AP)	1	
-41	1104-00-00-0541C	78189	. WASHER,LOCK,external,0.123 ID X 0.245 inch.. OD,steel (AP)	1	
-42	334-1379-00	80009	. LABEL,electron tube,adhesive back,warning...	1	
-43	334-1951-01	80009	. LABEL,electron tube,adhesive back,warning...	1	
-44	337-2124-00	80009	. SHIELD,ELECTRON TUBE.....	1	
-45	131-0472-00	80009	. CLIP,ELECTRICAL,female.....	4	
-46	46231	22526	. CONTACT,ELECTRICAL,0.577 inch long,22-26.... AWG, wire (80009 No. 131-0621-00)	4	
-47	47439	22526	. CONTACT,ELECTRICAL,0.48 inch long,22-26 AWG. wire (80009 No. 131-0707-00)	2	
-48	352-0169-00	80009	. CONNECTOR BODY,PLUG,ELECTRICAL,2 wire black.	1	
-49	46231	22526	. CONTACT,ELECTRICAL,0.577 inch long,22-26 AWG wire (80009 No. 131-0621-00)	2	
-50	352-0198-00	80009	. CONNECTOR BODY,PLUG,ELECTRICAL,2 wire black.	1	
-51	175-0825-00	80009	. WIRE,ELECTRICAL,2 wire ribbon,1.450 feet.... long	AR	

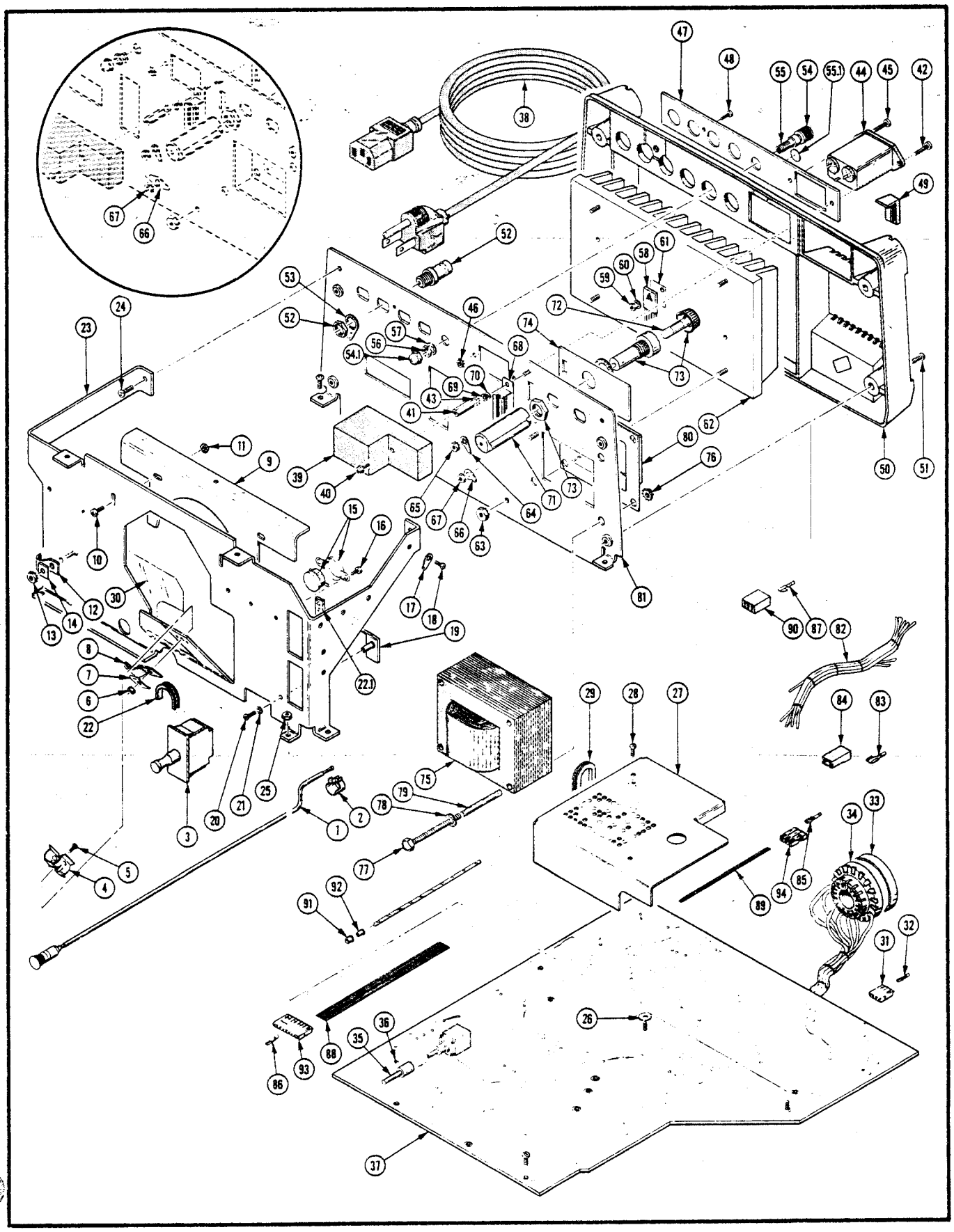

Figure 8-13. Main Chassis Assembly.

FIG. & INDEX NO.	PART NUMBER	FSCM	1 2 3 4 5 6 7 DESCRIPTION	UNITS PER ASSY	USABLE ON CODE
8-13-	----- -----	80009	MAIN CHASSIS ASSEMBLY,NHA Figure 1-11.....	REF	
-1	384-1311-01	80009	. EXTENSION SHAFT,0.125 OD X 11.835 inch long, with knob	1	
-2	376-0127-00	80009	. COUPLER,SHAFT,plastic.....	1	
-3	2DM301	91929	. SWITCH,PUSH-PULL,10A,250VAC (80009 No..... 260-1222-00)	1	
-4	4522-5050-2C	86928	. CLIP,ELECTRICAL,component mounting (80009... No. 344-0250-00)	1	
-5	211-0097-00	80009	. SCREW,MACHINE,4-40 X 0.312 inch,pnh,steel... (AP)	1	
-6	210-0586-00	80009	. NUT,PLAIN,EXTENDED WASHER,4-40 X 0.25 inch,. steel (AP)	1	
-7	C191	95987	. WASHER,LOOP CLAMP,for 0.50 inch wide clamp,. steel (AP) (80009 No. 210-0863-00)	1	
-8	5-16-6BH	95987	. CLAMP,LOOP,0.287 inch diameter (80009 No.... 343-0042-00)	1	
-9	386-3519-00	80009	. SUPPORT,ELECTRON TUBE SHIELD,rear.....	1	
-10	211-0534-00	80009	. SCREW,ASSEMBLED WASHER,6-32 X 0.312 inch,... pnh,steel (AP)	2	
-11	210-0457-00	80009	. NUT,PLAIN,EXTENDED WASHER,6-32 X 0.312 inch, steel (AP)	2	
-12	5-16-6BH	95987	. CLAMP,LOOP,0.287 inch diameter (80009 No.... 343-0042-00)	1	
-13	210-0457-00	80009	. NUT,PLAIN,EXTENDED WASHER,6-32 X 0.312 inch, steel (AP)	1	
-14	C191	95987	. WASHER,LOOP CLAMP,for 0.50 inch wide clamp,. steel (AP) (80009 No. 210-0863-00)	1	
-15	20704-L67-322	01295	. SWITCH,THERMOSTATIC,normally closed,10A,24V. (80009 No. 260-0724-01)	1	
-16	213-0124-00	80009	. SCREW,TAPPING,THREAD FORMING,6-20 X 0.250... inch,pnh,steel (AP)	2	
-17	2104-06-00-2520N	78189	. TERMINAL,LUG,SE #6 (80009 No. 210-0202-00)..	1	
-18	211-0504-00	80009	. SCREW,MACHINE,6-32 X 0.25 inch,pnh,steel.... (AP)	1	
-19	343-0528-00	80009	. CLAMP,TRANSISTOR,retainer.....	1	
-20	211-0012-00	80009	. SCREW,MACHINE,4-40 X 0.375 inch,pnh,steel... (AP)	1	
-21	1204-00-00-0541C	78189	. WASHER,LOCK,internal,0.12 ID X 0.26 inch OD, steel (AP) (80009 No. 210-0004-00)	1	
-22	348-0141-00	80009	. GROMMET,PLASTIC,u-shaped.....	1	
-22.1	348-0070-01	80009	. PAD,CUSHIONING,2.03 X 0.069 X 0.18 silicon.. rubber	1	K
-23	441-1260-00	80009	. CHASSIS,ELECTRONIC EQUIPMENT,power supply...	1	
-24	211-0534-00	80009	. SCREW,ASSEMBLED WASHER,6-32 X 0.312 inch,... pnh,steel (AP)	2	
-25	210-0586-00	80009	. NUT,PLAIN,EXTENDED WASHER,4-40 X 0.25 inch,. steel (AP)	2	
-26	210-0994-00	80009	. WASHER,FLAT,0.125 ID X 0.25 inch OD,steel...	1	
-27	337-2128-00	80009	. SHIELD,ELECTRICAL,high voltage.....	1	
-28	211-0007-00	80009	. SCREW,MACHINE,4-40 X 0.188 inch,pnh,steel... (AP)	2	
-29	348-0141-00	80009	. GROMMET,PLASTIC,u-shaped.....	1	

FIG. & INDEX NO.	PART NUMBER	FSCM	1 2 3 4 5 6 7 DESCRIPTION	UNITS PER ASSY	USABLE ON CODE
8-13-30	342-0297-00	80009	. INSULATOR,FILM,high voltage power supply....	1	
	136-0624-00	80009	. SOCKET,PLUG-IN,ELECTRONIC,electron,tube.....	1	T
	136-0624-01	80009	. SOCKET,PLUG-IN,ELECTRONIC,electron tube..... 14 contact with leads	1	U
-31	352-0162-00	80009	. . CONNECTOR BODY,PLUG,ELECTRICAL,4 wire..... black	1	
	198-0902-00	80009	. . WIRE SET,ELECTRICAL,electron tube socket..	1	G
	198-0902-01	80009	. . WIRE SET,ELECTRICAL,electron tube socket..	1	H
-32	47439	22526	. . . CONTACT,ELECTRICAL,0.48 inch long,..... 22-26 AWG wire (80009 No. 131-0707-00)	4	
-33	200-0616-00	80009	. . . COVER,ELECTRON TUBE SOCKET.....	1	
-34	136-0202-01	80009	. . . SOCKET,PLUG-IN,14 pin.....	1	
-35	384-1351-00	80009	. EXTENSION SHAFT,0.312 OD X 1.0 inch long....	1	
-36	213-0153-00	80009	. . SETSCREW,5-40 X 0.125 inch,hex socket,.... steel	1	
-37	670-4853-00	80009	. CIRCUIT BOARD ASSEMBLY,Interface,See Figure. 14 for Breakdown	1	
-38	161-0118-00	80009	. CABLE ASSEMBLY,POWER,three 16 AWG,125V,90.0. inch long	1	
-39	337-2388-00	80009	. SHIELD,ELECTRICAL,power plug.....	1	
-40	211-0207-00	80009	. SCREW,ASSEMBLED WASHER,4-40 X 0.312 inch,... pnh,steel (AP)	1	N
-40	211-0244-00	80009	. SCREW,ASSEMBLED WASHER,4-40 X 0.312,pnh,.... steel (AP)	1	O
-41	129-0123-00	80009	. SPACER,POST,0.25 hex X 0.688 inch long,with. 4-40 threads	1	
-42	211-0016-00	80009	. SCREW,MACHINE,4-40 X 0.625 inch,pnh,steel... (AP)	1	
-43	1104-00-00-0541C	78189	. WASHER,LOCK,external,0.123 ID X 0.245 inch.. OD,steel (AP)	1	
-44	F-11935-6	02777	. FILTER,RADIO FREQUENCY INTERFACE,6A,250VAC,. 400Hz (80009 No. 119-0420-00)	1	
-45	211-0016-00	80009	. SCREW,MACHINE,4-40 X 0.625 inch,pnh,steel... (AP)	1	
-46	210-0586-00	80009	. NUT,PLAIN,EXTENDED WASHER,4-40 X 0.25 inch,. steel (AP)	1	
-47	333-2273-00	80009	. PANEL,REAR,BNC.....	1	
-48	213-0113-00	80009	. SCREW,TAPPING,THREAD FORMING,2-32 X 0.312... inch,pnh,steel (AP)	1	
-49	348-0434-00	80009	. FOOT,CABINET,rear cover.....	4	
-50	200-1802-05	80009	. COVER,SCOPE,rear.....	1	
-51	211-0511-00	80009	. SCREW,MACHINE,6-32 X 0.50 inch,pnh,steel.... (AP)	4	
-52	28JR166-1	24931	. CONNECTOR,RECEPTACLE,BNC,female (80009 No... 131-0352-02)	4	
-53	210-0255-00	80009	. TERMINAL,LUG,0.391 inch OD,internal tooth...	4	
-54	200-0103-00	80009	. NUT,PLAIN,KNURL,0.25-28 X 0.375 inch OD,.... brass	1	
-54.1	220-0814-00	80009	. NUT,PLAIN,0.25-28 X 0.437 inch hex,steel....	1	
-55	129-0077-00	80009	. STUD,SHOULDERED,0.938 inch long,brass.....	1	
-55.1	334-3379-00	80009	. MARKER,IDENTIFICATION,marked GROUND SYMBOL..	1	I
-56	3089-402	73743	. NUT,PLAIN,HEXAGON,0.25-28 X 0.375 inch,brass (AP) (80009 No. 210-0455-00)	1	
-57	1214-05-00-0541C	78189	. WASHER,LOCK,internal,0.26 ID X 0.40 inch OD, steel (AP) (80009 No. 210-0046-00)	1	

FIG. & INDEX NO.	PART NUMBER	FSCM	1 2 3 4 5 6 7 DESCRIPTION	UNITS PER ASSY	USABLE ON CODE
8-13-58	151-0349-00	80009	. TRANSISTOR,silicon,NPN,selected.....	3	
-59	2X12161-402	73743	. NUT,PLAIN,HEXAGON,4-40 X 0.188 inch,brass... (AP) (80009 No. 210-0406-00)	3	
-60	4704-04-02	78189	. WASHER,LOCK,0.228 ID X 0.375 inch OD,steel.. (AP) (80009 No. 210-1122-00)	3	
-61	342-0163-00	80009	. INSULATOR,PLATE,transistor.....	3	
-62	214-2330-00	80009	. HEAT SINK,TRANSISTOR.....	1	
-63	210-0457-00	80009	. NUT,PLAIN,EXTENDED WASHER,6-32 X 0.312 inch, steel (AP)	4	
-64	2104-04-00-2520N	78189	. TERMINAL,LUG,SE #4 (80009 No. 210-0201-00)..	1	P
-64	2104-06-00-2520N	78189	. TERMINAL,LUG,0.146 ID,locking,bronzed..... tinned (80009 No. 210-0202-00)	1	Q
-65	210-0586-00	80009	. NUT,PLAIN,EXTENDED WASHER,4-40 X 0.25 inch,. steel (AP)	1	P
-65	210-0457-00	80009	. NUT,PLAIN,ASSEMBLED WASHER,6-32 X 0.312,.... steel,cadmium plated (AP)	1	Q
-66	2157-06-01-2520N	78189	. TERMINAL,LUG,0.146 inch diameter,45 degree.. bend (80009 No. 210-0204-00)	1	P
-66	2104-06-00-2520N		. TERMINAL,LUG,0.146 ID,locking,bronzed..... tinned (80009 No. 210-0202-00)	2	Q
-67	210-0586-00	80009	. NUT,PLAIN,EXTENDED WASHER,4-40 X 0.25 inch,. steel (AP)	1	P
-67	210-0457-00	80009	. NUT,PLAIN,ASSEMBLED WASHER,6-32 X 0.312,.... steel,cadmium plated (AP)	2	Q
-68	260-1780-00	80009	. SWITCH,SLIDE,DPDT,3A,125V.....	1	
-69	2X12161-402	73743	. NUT,PLAIN,HEXAGON,4-40 X 0.188 inch,brass... (AP) (80009 No. 210-0406-00)	2	
-70	1204-00-00-0541C	78189	. WASHER,LOCK,internal,0.12 ID X 0.26 inch OD, steel (AP) (80009 No. 210-0004-00)	2	
-71	200-0237-03	80009	. COVER,FUSEHOLDER.....	1	
-72	AGC 1	71400	. FUSE,CARTRIDGE,3AG,1A,250V,fast-blow (80009. No. 159-0022-00)	1	
-73	345002	75915	. FUSEHOLDER,with hardware (80009 No..... 352-0362-01)	1	
-74	333-2274-00	80009	. PANEL,REAR,fuse.....	1	
-75	120-1095-00	80009	. TRANSFORMER,POWER,STEPDOWN.....	1	
-76	220-0410-00	80009	. NUT,EXTENDED WASHER,10-32 X 0.375 inch,steel (AP)	4	
-77	212-0517-00	80009	. SCREW,MACHINE,10-32 X 1.750 inch,hex head,.. steel (AP)	4	
-78	210-0812-00	80009	. WASHER,NONMETAL,#10 fiber (AP).....	4	
-79	166-0226-00	80009	. INSULATOR SLEEVE,ELECTRICAL,1.125 inch long. (AP)	4	
-80	200-1544-01	80009	. COVER,TRANSFORMER,2.5 X 3.0 X 0.65 inch high	1	
-81	386-3691-00	80009	. SUBPANEL,REAR.....	1	
-82	179-2514-00	80009	. WIRING HARNESS,power.....	1	
-83	42617-2	00779	. . CONTACT,ELECTRICAL,quick disconnect (80009 No. 131-0861-00)	6	
-84	1-480435-0	00779	. . COVER,ELECTRICAL CONNECTOR,plastic (80009. No. 200-1075-00)	6	
	198-3418-00	80009	. WIRE SET,ELECTRICAL,main module.....	1	
-85	46231	22526	. . CONTACT,ELECTRICAL,0.577 inch long,22-26.. AWG wire (80009 No. 131-0621-00)	12	
-86	47439	22526	. . CONTACT,ELECTRICAL,0.48 inch long,22-26... AWG wire (80009 No. 131-0707-00)	18	

FIG. & INDEX NO.	PART NUMBER	FSCM	1 2 3 4 5 6 7 DESCRIPTION	UNITS PER ASSY	USABLE ON CODE
8-13-87	08-56-0105	27264	. . CONTACT,ELECTRICAL,18-24 AWG,female,brass. (80009 No. 131-1790-00)	9	
-88	TEK-175-0832-00	23499	. . WIRE,ELECTRICAL,9 wire ribbon,0.917 foot.. long (80009 No. 175-0832-00)	AR	
-89	175-0862-00	80009	. . WIRE,ELECTRICAL,3 wire ribbon,1.896 foot.. long	AR	
-90	09-50-4031	27264	. . BODY,CONNECTOR,PLUG,3 female position,.... nylon (80009 No. 204-0671-00)	3	
-91	210-0774-00	80009	. . EYELET,METALLIC,0.152 OD X 0.245 inch..... long, brass	4	
-92	210-0775-00	80009	. . EYELET,METALLIC,0.126 OD X 0.230 inch..... long, brass	4	
-93	352-0167-00	80009	. . CONNECTOR BODY,PLUG,ELECTRICAL,9 wire..... black	2	
-94	352-0199-00	80009	. . CONNECTOR BODY,PLUG,ELECTRICAL,3 wire..... black	3	

For Service Manuals Contact
MAURITRON TECHNICAL SERVICES
8 Cherry Tree Rd, Chinnor
Oxon OX9 4QY
Tel:- 01844-351694 Fax:- 01844-352554
Email:- enquiries@mauritron.co.uk

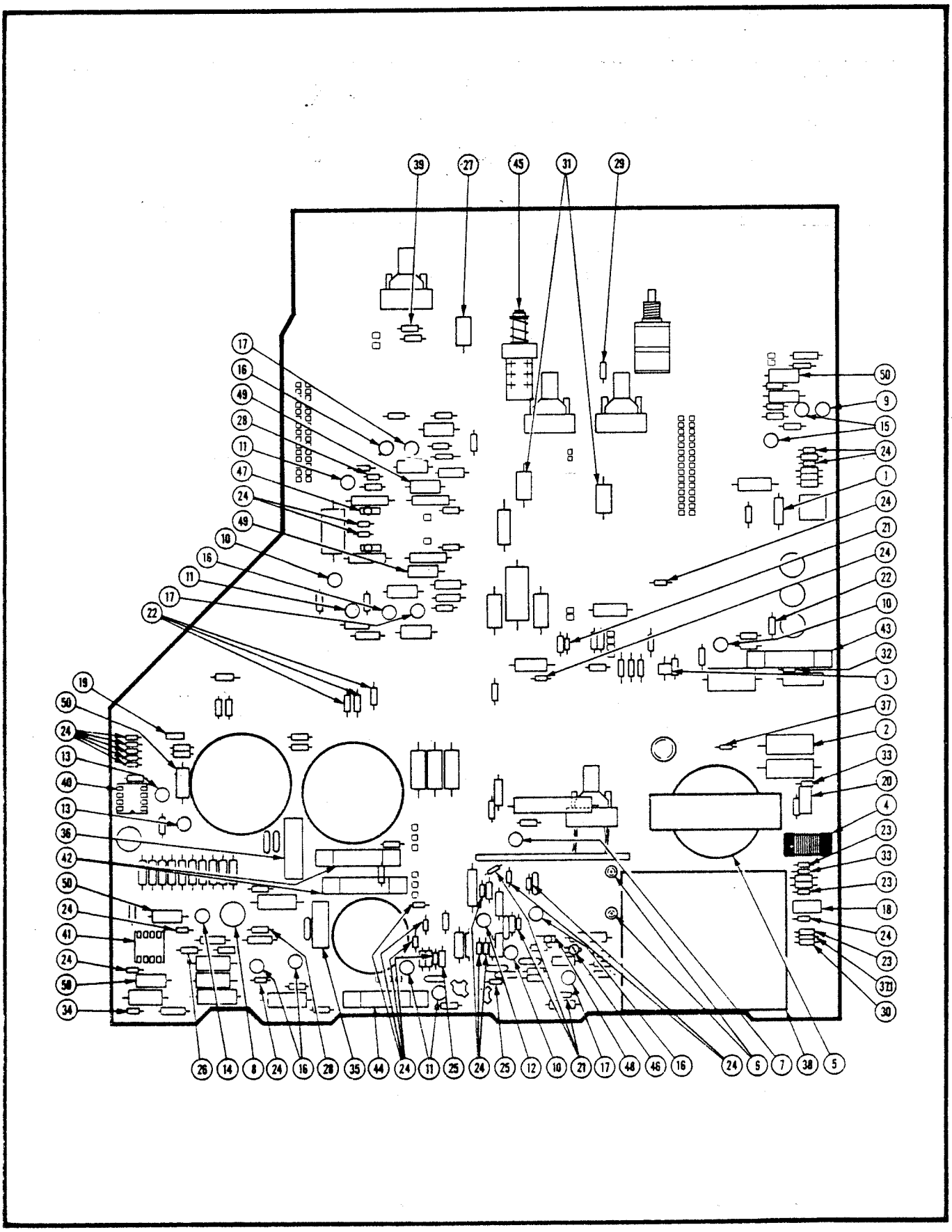

Figure 8-14. A11 Circuit Board Assembly, Interface (sheet 1 of 4).

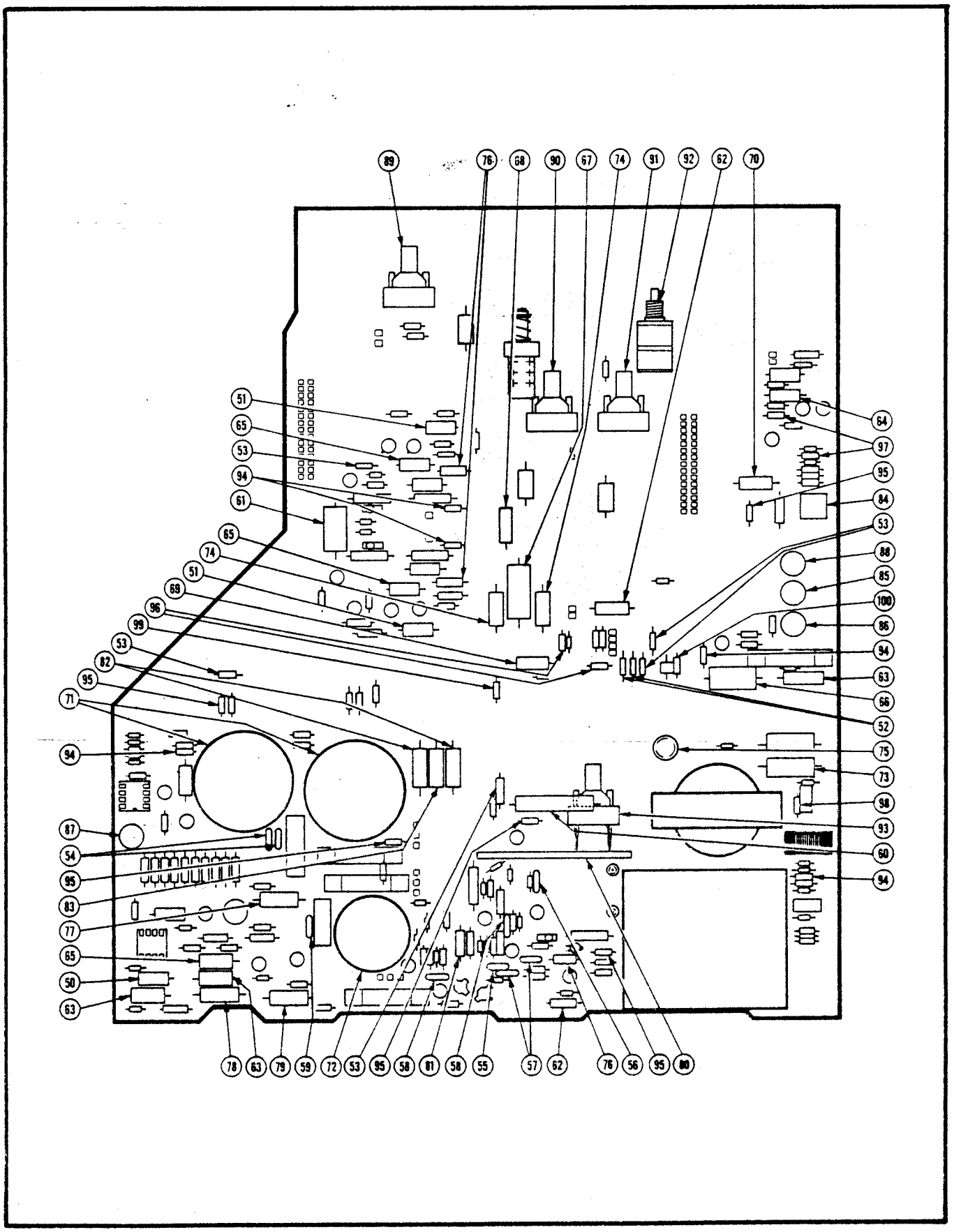

Figure 8-14. A11 Circuit Board Assembly, Interface (sheet 2 of 4).

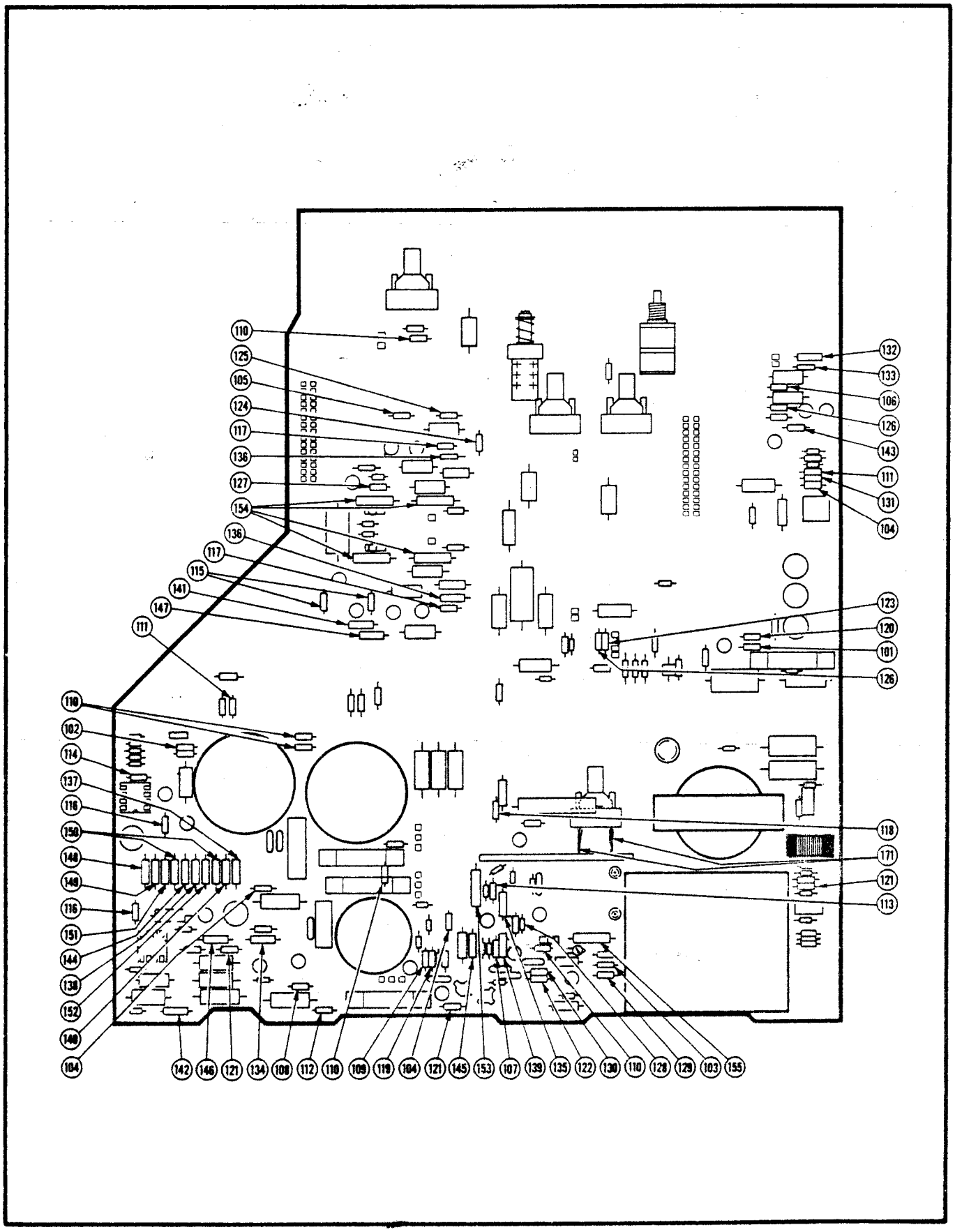

Figure 8-14. A11 Circuit Board Assembly, Interface (sheet 3 of 4).

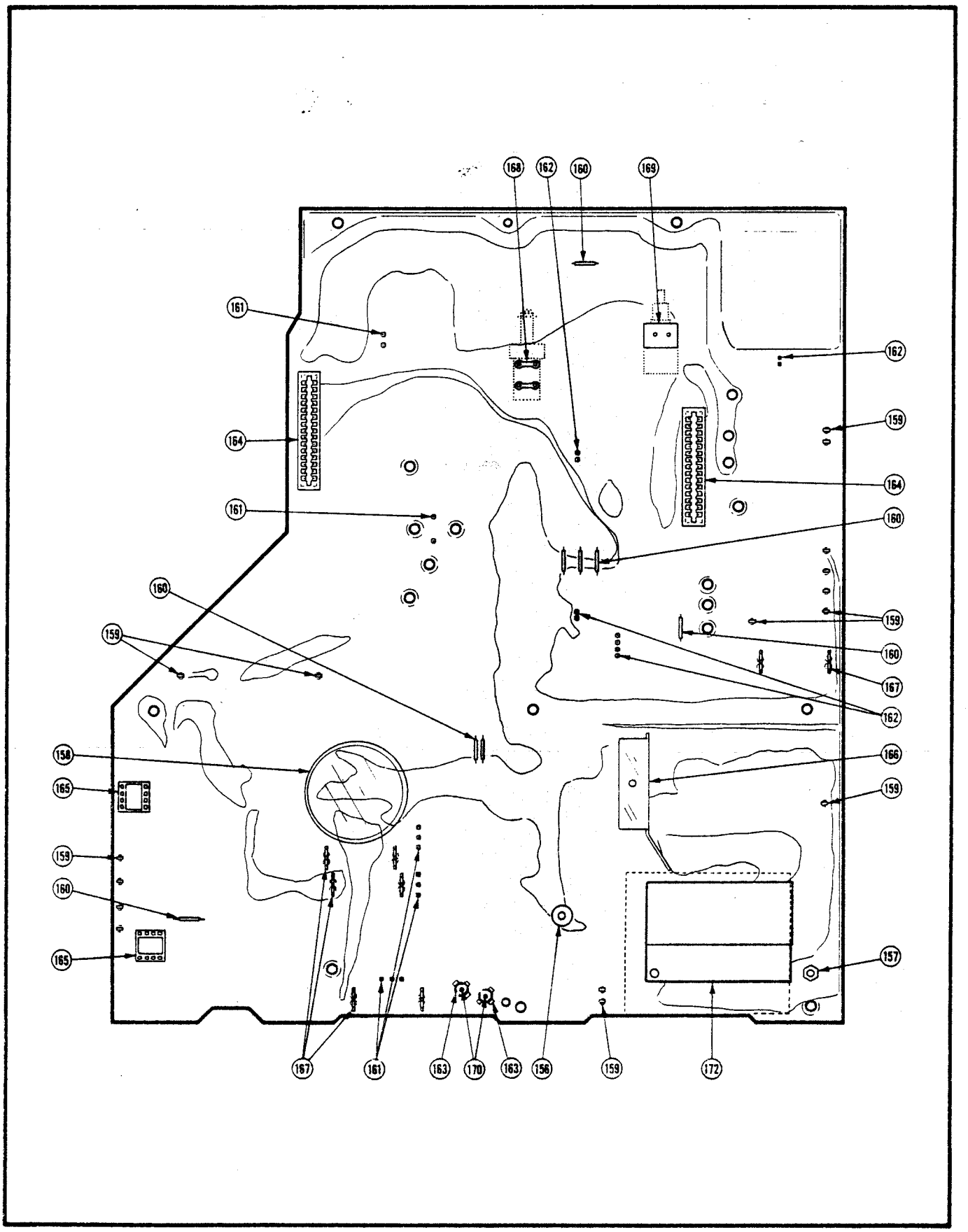

Figure 8-14. A11 Circuit Board Assembly, Interface (sheet 4 of 4).

FIG. & INDEX NO.	PART NUMBER	FSCM	1 2 3 4 5 6 7 DESCRIPTION	UNITS PER ASSY	USABLE ON CODE
8-14-	670-4853-00	80009	CIRCUIT BOARD ASSEMBLY,Interface,NHA Figure... 13-37	REF	
-1	B6310-1	76498	. COIL,RADIO FREQUENCY,3.9UH (80009 NO..... 108-0245-00)	1	
-2	108-0422-00	80009	. COIL,RADIO FREQUENCY,80UH.....	1	
-3	70F183A1	76493	. COIL,RADIO FREQUENCY,1.8MH (80009 No..... 108-0691-00)	1	
-4	108-0820-00	80009	. COIL,RADIO FREQUENCY,72UH.....	1	
-5	120-0984-00	80009	. TRANSFORMER,POWER,STEP-DOWN AND STEP-UP,High Voltage	1	
-6	NE2T-A1AT	08806	. LAMP,GLOW,0.5MA,60/125V (80009 No..... 150-0002-00)	2	
-7	2N2484	15818	. TRANSISTOR,silicon,NPN (80009 No..... 151-0126-00)	1	
-8	151-0136-00	80009	. TRANSISTOR,silicon,NPN.....	1	
-9	151-0164-00	80009	. TRANSISTOR,silicon,PNP.....	1	
-10	2N3906	01295	. TRANSISTOR,silicon,PNP (80009 No..... 151-0188-00)	3	
-11	151-0190-00	80009	. TRANSISTOR,silicon,NPN.....	4	
-12	151-0192-00	80009	. TRANSISTOR,silicon,NPN,selected.....	1	
-13	2N2907A	04713	. TRANSISTOR,silicon,PNP (80009 No..... 151-0301-00)	2	
-14	2N2222A	04713	. TRANSISTOR,silicon,NPN (80009 No..... 151-0302-00)	1	
-15	151-0342-00	80009	. TRANSISTOR,silicon,PNP.....	2	
-16	151-0347-00	80009	. TRANSISTOR,silicon,NPN.....	5	
-17	151-0350-00	80009	. TRANSISTOR,silicon,PNP.....	3	
-18	151-0364-00	80009	. TRANSISTOR,silicon,PNP.....	1	
-19	151-0405-00	80009	. TRANSISTOR,silicion,NPN,selected.....	1	
-20	151-0426-02	80009	. TRANSISTOR,silicon,NPN,selected.....	1	L
-20	151-0701-00	80009	. TRANSISTOR,silicon,NPN.....	1	M
-21	152-0061-00	80009	. SEMICONDUCTOR DEVICE,silicon,175V,0.1A.....	4	
-22	152-0066-00	80009	. SEMICONDUCTOR DEVICE,silicon,400V,750MA.....	4	
-23	152-0107-04	80009	. SEMICONDUCTOR DEVICE,silicon,400V,400MA,.... selected	3	
-24	1N4152R	01295	. SEMICONDUCTOR DEVICE,silicon,30V,150MA..... (80009 No. 152-0141-02)	24	L
-24	1N4152R	01295	. SEMICONDUCTOR DEVICE,silicon,30V,150MA..... (80009 No. 152-0141-02)	23	M
-25	152-0195-00	80009	. SEMICONDUCTOR DEVICE,zener,0.4W,5.1V,5%.....	2	L
-25	152-0195-00	80009	. SEMICONDUCTOR DEVICE,zener,0.4W,5.1V,5%.....	1	M
-25	1N965B	04713	. SEMICONDUCTOR DEVICE,zener,0.4W,15V,5%..... (80009 No. 152-0243-00)	1	M
-26	1N970B	04713	. SEMICONDUCTOR DEVICE,zener,0.4W,24V,5%..... (80009 No. 152-0265-00)	1	
-27	1N3034B	04713	. SEMICONDUCTOR DEVICE,zener,1W,39V,5%..... (80009 No. 152-0229-00)	1	
-28	1N965B	04713	. SEMICONDUCTOR DEVICE,zener,0.4W,15V,5%..... (80009 No. 152-0243-00)	1	
-29	1N989B	04713	. SEMICONDUCTOR DEVICE,zener,0.4W,150V,5%..... (80009 No. 152-0247-00)	1	
-30	1N991B	04713	. SEMICONDUCTOR DEVICE,zener,0.4W,180V,5%..... (80009 No. 152-0289-00)	1	

FIG. & INDEX NO.	PART NUMBER	FSCM	1 2 3 4 5 6 7 DESCRIPTION	UNITS PER ASSY	USABLE ON CODE
8-14-31	1N3828A	04713	. SEMICONDUCTOR DEVICE,1W,6.2V,5% (80009 No... (80009 No. 152-0309-00)	2	
-32	1N983B	04713	. SEMICONDUCTOR DEVICE,zener,0.4W,82V,5%..... (80009 No. 152-0357-00)	1	
-33	152-0061-00	80009	. SEMICONDUCTOR DEVICE,silicon,175V,0.1A.....	2	
-34	1N937	04713	. SEMICONDUCTOR DEVICE,zener,0.25W,9V,5%..... (80009 No. 152-0411-00)	1	
-35	152-0488-00	80009	. SEMICONDUCTOR DEVICE,silicon,200V,1500MA....	1	
-36	MDA960-1	04713	. SEMICONDUCTOR DEVICE,bridge,50V,2.5A..... (80009 No. 152-0556-00)	1	
-37	152-0629-00	80009	. SEMICONDUCTOR DEVICE,silicon,225V,5UA.....	1	
-37.1	1N968B	04713	. SEMICONDUCTOR DEVICE,zener,0.4W,20V,5%..... (80009 No. 152-0304-00)	1	
-38	152-0635-00	80009	. VOLTAGE MULTIPLIER,silicon,high voltage..... multiplier	1	
-39	1N957B	04713	. SEMICONDUCTOR DEVICE,zener,0.4W,6.8V,5%..... (80009 No. 152-0647-00)	1	
-40	156-0067-00	80009	. MICROCIRCUIT,LINEAR,operational amplifier...	1	
-41	156-0158-00	80009	. MICROCIRCUIT,LINEAR,dual operational..... amplifier	1	
-42	AGC 2	71400	. FUSE,CARTRIDGE,3AG,2A,250V,fast-blow..... (80009 No. 159-0021-00)	2	
-43	AGC 1/4	71400	. FUSE CARTRIDGE,3AG,0.25A,250V,fast-blow..... (80009 No. 159-0028-00)	1	
-44	AGC 3/10	71400	. FUSE,CARTRIDGE,3AG,0.3A,250V,0.25 sec..... (80009 No. 159-0030-00)	1	
-45	260-1686-00	80009	. SWITCH,PUSH,1 station,2 pole,momentary.....	1	
-46	530-002	72982	. CAPACITOR,VARIABLE,PLASTIC,0.25-1.5pF,600V.. (80009 No. 281-0064-00)	1	
-47	2222-801-96138	80031	. CAPACITOR,VARIABLE,CERAMIC DIELECTRIC,..... 0.5-3pF,400V (80009 No. 281-0214-00)	2	
-48	2222-801-96139	80031	. CAPACITOR,VARIABLE,CERAMIC DIELECTRIC,..... 1-5.5pF,400V (80009 No. 281-0220-00)	1	
-49	314-009C0K229D	72982	. CAPACITOR,FIXED,CERAMIC DIELECTRIC,2.2pF,... 0.5%,200V (80009 No. 281-0756-00)	2	
-50	314-022X5P101M	72982	. CAPACITOR,FIXED,CERAMIC DIELECTRIC,100pF,... 20%,200V (80009 No. 281-0766-00)	4	
-51	314-022Z5U0222M	72982	. CAPACITOR,FIXED,CERAMIC DIELECTRIC,0.0022UF, 20%,200V (80009 No. 281-0771-00)	2	
-52	8005H9AADW5R103K	72982	. CAPACITOR,FIXED,CERAMIC DIELECTRIC,0.01UF,.. 10%,100V (80009 No. 281-0773-00)	2	
-53	8005D9AABZ5U104M	72982	. CAPACITOR,FIXED,CERAMIC DIELECTRIC,0.1UF,... 20%,50V (80009 No. 281-0775-00)	5	
-54	855-558Z5U-103Z	72982	. CAPACITOR,FIXED,CERAMIC DIELECTRIC,0.01UF,.. +80-20%,150V (80009 No. 283-0003-00)	2	
-55	273C20	56289	. CAPACITOR,FIXED,CERAMIC DIELECTRIC,0.05UF,.. +100-20%,50V (80009 No. 283-0010-00)	1	
-56	8131N039Z5U-104Z	72982	. CAPACITOR,FIXED,CERAMIC DIELECTRIC,0.1UF,... +80-20%,30V (80009 No. 283-0024-00)	1	
-57	274C10	56289	. CAPACITOR,FIXED,CERAMIC DIELECTRIC,0.1UF,... +80-20%,200V (80009 No. 283-0057-00)	2	
-58	19C611	56289	. CAPACITOR,FIXED,CERAMIC DIELECTRIC,0.022UF,. +80-20%,25V (80009 No. 283-0080-00)	2	

FIG. & INDEX NO.	PART NUMBER	FSCM	1 2 3 4 5 6 7 DESCRIPTION	UNITS PER ASSY	USABLE ON CODE
8-14-59	19C242B	56289	. CAPACITOR,FIXED,CERAMIC DIELECTRIC,0.005UF,. +80-20%,150V (80009 No. 283-0110-00)	1	
-60	430P522	56289	. CAPACITOR,FIXED,PLASTIC,0.0012UF,10%,4000V.. (80009 No. 285-1040-00)	1	
-61	192P2249R8	56289	. CAPACITOR,FIXED,PLASTIC,0.22UF,10%,80V..... (80009 No. 285-1098-00)	1	
-62	332K06PP481	19396	. CAPACITOR,FIXED,PLASTIC,3300pF,10%,400V..... (80009 No. 285-1095-00)	2	
-63	PT605C473M	19396	. CAPACITOR,FIXED,PLASTIC,0.047UF,20%,200V.... (80009 No. 285-1099-00)	3	
-64	223J02PT485	19396	. CAPACITOR,FIXED,PLASTIC,0.022UF,5%,200V..... (80009 No. 285-1100-00)	1	
-65	223K02PT485	19396	. CAPACITOR,FIXED,PLASTIC,0.022UF,10%,200V.... (80009 No. 285-1101-00)	3	
-66	PP680C823K	19396	. CAPACITOR,FIXED,PLASTIC,0.082UF,10%,200V.... (80009 No. 285-1119-00)	1	
-67	30D506G050DD9	56289	. CAPACITOR,FIXED,ELECTROLYTIC,50UF,+75-10%,.. 50V (80009 No. 290-0117-00)	1	
-68	30D205F150BB9	56289	. CAPACITOR,FIXED,ELECTROLYTIC,2UF,+50-10%,... 150V (80009 No. 290-0159-00)	1	
-69	500D105F150BA7	56289	. CAPACITOR,FIXED,ELECTROLYTIC,1UF,+50-10%,... 150V (80009 No. 290-0164-00)	1	
-70	150D475X0035B2	56289	. CAPACITOR,FIXED,ELECTROLYTIC,4.7UF,20%,35V.. (80009 No. 290-0187-00)	1	
-71	290-0508-01	80009	. CAPACITOR,FIXED,ELECTROLYTIC,18,000UF,..... +100-10%,15V	2	
-72	20-36435	90201	. CAPACITOR,FIXED,ELECTROLYTIC,1000UF,+75-10%, 75V (80009 No. 290-0586-01)	1	
-73	T11C825M075AS	05397	. CAPACITOR,FIXED,ELECTROLYTIC,8.2UF,20%,75V.. (80009 No. 290-0716-00)	1	
-74	502D226	56289	. CAPACITOR,FIXED,ELECTROLYTIC,47UF,+50-10%,.. 16V (80009 No. 290-0746-00)	2	
-75	502D227	56289	. CAPACITOR,FIXED,ELECTROLYTIC,2.2UF,+50-10%,. 160V (80009 No. 290-0758-00)	1	
-76	EB2235	01121	. RESISTOR,FIXED,COMPOSITION,22k ohm,5%,0.50W (80009 No. 301-0223-00)	3	
-77	GB2425	01121	. RESISTOR,FIXED,COMPOSITION,2.4k ohm,5%,1W... (80009 No. 303-0242-00)	1	
-78	GB3025	01121	. RESISTOR,FIXED,COMPOSITION,3k ohm,5%,1W..... (80009 No. 303-0302-00)	1	
-79	GB4725	01121	. RESISTOR,FIXED,COMPOSITION,4.7k ohm,5%,1W... (80009 No. 303-0472-00)	1	
-80	307-0471-00	80009	. RESISTOR,NETWORK,FIXED FILM,high voltage.... divider	1	
-81	RS2B-B16000J	91637	. RESISTOR,FIXED,WIRE WOUND,1.6k ohm,5%,3W.... (80009 No. 308-0393-00)	1	
-82	BWH-R5100J	75042	. RESISTOR,FIXED,WIRE WOUND,0.51 ohm,5%,2W.... (80009 No. 308-0679-00)	2	
-83	BWH-1R800J	75042	. RESISTOR,FIXED,WIRE WOUND,1.8 ohm,5%,2W..... (80009 No. 308-0703-00)	1	
-84	3386F-T04-251	32997	. RESISTOR,VARIABLE,NONWIRE WOUND,250 ohm,10%, 0.50W (80009 No. 311-1223-00)	1	

FIG. & INDEX NO.	PART NUMBER	FSCM	1 2 3 4 5 6 7 DESCRIPTION	UNITS PER ASSY	USABLE ON CODE
8-14-85	91A-20002M	73138	. RESISTOR,VARIABLE,NONWIRE WOUND,200k ohm,... 20%,0.50W (80009 No. 311-1554-00)	1	
-86	91A-25001M	73138	. RESISTOR,VARIABLE,NONWIRE WOUND,25k ohm,20%, 0.50W (80009 No. 311-1557-00)	1	
-87	91A-25000M	73138	. RESISTOR,VARIABLE,NONWIRE WOUND,2.5k ohm,... 20%, 0.50W (80009 No. 311-1561-00)	1	
-88	91A-20000M	73138	. RESISTOR,VARIABLE,NONWIRE WOUND,2k ohm,20%,. 0.50W (80009 No. 311-1562-00)	1	
-89	3859Z-X05-103F	80294	. RESISTOR,VARIABLE,NONWIRE WOUND,10k ohm,.... 10%,2W (80009 No. 311-1725-00)	1	
-90	3859Z-X04-202A	80294	. RESISTOR,VARIABLE,NONWIRE WOUND,2k ohm,10%,. 2W (80009 No. 311-1726-00)	1	
-91	3858Z-B78-203A	80294	. RESISTOR,VARIABLE,NONWIRE WOUND,20k ohm,10%, 2W (80009 No. 311-1727-00)	1	
-92	D388-CM40910	12697	. RESISTOR,VARIABLE,NONWIRE WOUND,2k ohm/2M... ohm (80009 No. 311-1769-00)	1	
-93	3859Z-X52-505Z	32997	. RESISTOR,VARIABLE,NONWIRE WOUND,5M ohm,20%,. 2W (80009 No. 311-1790-00)	1	
-94	CB1015	01121	. RESISTOR,FIXED,COMPOSITION,100 ohm,5%,0.25W. (80009 No. 315-0101-00)	5	
-95	CB1025	01121	. RESISTOR,FIXED,COMPOSITION,1k ohm,5%,0.25W.. (80009 No. 315-0102-00)	5	
-96	CB1045	01121	. RESISTOR,FIXED,COMPOSITION,100k ohm,5%,0.25W (80009 No. 315-0104-00)	2	
-97	CB1145	01121	. RESISTOR,FIXED,COMPOSITION,110k ohm,5%,0.25W (80009 No. 315-0114-00)	2	
-98	CB1205	01121	. RESISTOR,FIXED,COMPOSITION,12 ohm,5%,0.25W.. (80009 No. 315-0120-00)	1	
-99	CB1225	01121	. RESISTOR,FIXED,COMPOSITION,1.2k ohm,5%,0.25W (80009 No. 315-0122-00)	1	
-100	CB1235	01121	. RESISTOR,FIXED,COMPOSITION,12k ohm,5%,0.25W. (80009 No. 315-0123-00)	1	
-101	CB1315	01121	. RESISTOR,FIXED,COMPOSITION,130 OHM,5%,0.25W. (80009 No. 315-0131-00)	1	
-102	CB1325	01121	. RESISTOR,FIXED,COMPOSITION,1.3k ohm,5%,0.25W (80009 No. 315-0132-00)	1	
-103	CB1515	01121	. RESISTOR,FIXED,COMPOSITION,150 ohm,5%,0.25W. (80009 No. 315-0151-00)	1	
-104	CB1535	01121	. RESISTOR,FIXED,COMPOSITION,15k ohm,5%,0.25W. (80009 No. 315-0153-00)	3	
-105	CB1825	01121	. RESISTOR,FIXED,COMPOSITION,1.8k ohm,5%,0.25W (80009 No. 315-0182-00)	1	
-106	CB1835	01121	. RESISTOR,FIXED,COMPOSITION,18k ohm,5%,0.25W. (80009 No. 315-0183-00)	1	
-107	CB2015	01121	. RESISTOR,FIXED,COMPOSITION,200 ohm,5%,0.25W (80009 No. 315-0201-00)	1	
-108	CB2045	01121	. RESISTOR,FIXED,COMPOSITION,200k ohm,5%,0.25W (80009 No. 315-0204-00)	1	
-109	CB2225	01121	. RESISTOR,FIXED,COMPOSITION,2.2k ohm,5%,0.25W (80009 No. 315-0222-00)	1	

FIG. & INDEX NO.	PART NUMBER	FSCM	1 2 3 4 5 6 7 DESCRIPTION	UNITS PER ASSY	USABLE ON CODE
8-14-110	CB2725	01121	. RESISTOR,FIXED,COMPOSITION,2.7k ohm,5%,0.25W (80009 No. 315-0272-00)	5	
-111	CB2735	01121	. RESISTOR,FIXED,COMPOSITION,27k ohm,5%,0.25W. (80009 No. 315-0273-00)	2	
-112	CB3035	01121	. RESISTOR,FIXED,COMPOSITION,30k ohm,5%,0.25W. (80009 No. 315-0303-00)	1	
-113	CB3905	01121	. RESISTOR,FIXED,COMPOSITION,39 ohm,5%,0.25W.. (80009 No. 315-0390-00)	1	
-114	CB3915	01121	. RESISTOR,FIXED,COMPOSITION,390 ohm,5%,0.25W. (80009 No. 315-0391-00)	1	
-115	CB4315	01121	. RESISTOR,FIXED,COMPOSITION,430 ohm,5%,0.25W. (80009 No. 315-0431-00)	2	
-116	CB4325	01121	. RESISTOR,FIXED,COMPOSITION,4.3k ohm,5%,0.25W (80009 No. 315-0432-00)	2	
-117	CB4705	01121	. RESISTOR,FIXED,COMPOSITION,47 ohm,5%,0.25W.. (80009 No. 315-0470-00)	2	
-118	CB4715	01121	. RESISTOR,FIXED,COMPOSITION,470 ohm,5%,0.25W. (80009 No. 315-0471-00)	1	
-119	CB4725	01121	. RESISTOR,FIXED,COMPOSITION,4.7k ohm,5%,0.25W (80009 No. 315-0472-00)	1	
-120	CB4745	01121	. RESISTOR,FIXED,COMPOSITION,470k ohm,5%,0.25W (80009 No. 315-0474-00)	1	
-121	CB5115	01121	. RESISTOR,FIXED,COMPOSITION,510 ohm, 5%,..... 0.25W (80009 No. 315-0511-00)	3	
-122	CB5125	01121	. RESISTOR,FIXED,COMPOSITION,5.1k ohm,5%,0.25W (80009 No. 315-0512-00)	1	
-123	CB5135	01121	. RESISTOR,FIXED,COMPOSITION,51k ohm,5%,0.25W. (80009 No. 315-0513-00)	1	
-124	CB5625	01121	. RESISTOR,FIXED,COMPOSITION,5.6k ohm,5%,0.25W (80009 No. 315-0562-00)	1	
-125	CB5635	01121	. RESISTOR,FIXED,COMPOSITION,56k ohm,5%,0.25W. (80009 No. 315-0563-00)	1	
-126	CB6235	01121	. RESISTOR,FIXED,COMPOSITION,62k ohm,5%,0.25W. (80009 No. 315-0623-00)	2	
-127	CB6815	01121	. RESISTOR,FIXED,COMPOSITION,680 ohm,5%,0.25W. (80009 No. 315-0681-00)	1	
-128	CB8215	01121	. RESISTOR,FIXED,COMPOSITION,820 ohm,5%,0.25W. (80009 No. 315-0821-00)	1	
-129	CB8235	01121	. RESISTOR,FIXED,COMPOSITION,82k ohm,5%,0.25W. (80009 No. 315-0823-00)	1	
-130	CB9115	01121	. RESISTOR,FIXED,COMPOSITION,910 ohm,5%,0.25W. (80009 No. 315-0911-00)	1	
-131	CB9125	01121	. RESISTOR,FIXED,COMPOSITION,9.1k ohm,5%,0.25W (80009 No. 315-0912-00)	1	
-132	MFF1816G187R0F	91637	. RESISTOR,FIXED,FILM,187 ohm,1%,0.125W..... (80009 No. 321-0123-00)	1	
-133	MFF1816G619R0F	91637	. RESISTOR,FIXED,FILM,619 ohm,1%,0.125W..... (80009 No. 321-0173-00)	1	
-134	MFF1816G634R0F	91637	. RESISTOR,FIXED,FILM,634 ohm,1%,0.125W..... (80009 No. 321-0174-00)	1	

FIG. & INDEX NO.	PART NUMBER	FSCM	1 2 3 4 5 6 7 DESCRIPTION	UNITS PER ASSY	USABLE ON CODE
8-14-135	MFF1816G665R0F	91637	. RESISTOR,FIXED,FILM,665 ohm,1%,0.125W..... (80009 No. 321-0176-00)	1	
-136	MFF1816G909R0F	91637	. RESISTOR,FIXED,FILM,909 ohm,1%,0.125W..... (80009 No. 321-0189-00)	2	
-137	MFF1816G11300F	91637	. RESISTOR,FIXED,FILM,1.13k ohm,1%,0.125W..... (80009 No. 321-0198-00)	1	
-138	MFF1816G30100F	91637	. RESISTOR,FIXED,FILM,3.01k ohm,1%,0.125W..... (80009 No. 321-0239-00)	1	
-139	MFF1816G42200F	91637	. RESISTOR,FIXED,FILM,4.22k ohm,1%,0.125W..... (80009 No. 321-0253-00)	1	L
-139	MFF1816G39200F	91637	. RESISTOR,FIXED,FILM,3.92k ohm,1%,0.125W..... (80009 No. 321-0250-00)	1	M
-140	MFF1816G52300F	91637	. RESISTOR,FIXED,FILM,5.23k ohm,1%,0.125W..... (80009 No. 321-0262-00)	1	
-141	MFF1816G54900F	91637	. RESISTOR,FIXED,FILM,5.49k ohm,1%,0.125W..... (80009 No. 321-0264-00)	1	
-142	MFF1816G11801F	91637	. RESISTOR,FIXED,FILM,11.8k ohm,1%,0.125W..... (80009 No. 321-0296-00)	1	
-143	MFF1816G16901F	91637	. RESISTOR,FIXED,FILM,16.9k ohm,1%,0.125W..... (80009 No. 321-0311-00)	1	
-144	MFF1816G21001F	91637	. RESISTOR,FIXED,FILM,21k ohm,1%,0.125W..... (80009 No. 321-0320-00)	1	
-145	MFF1816G24901F	91637	. RESISTOR,FIXED,FILM,24.9k ohm,1%,0.125W..... (80009 No. 321-0327-00)	1	
-146	MFF1816G31601F	91637	. RESISTOR,FIXED,FILM,31.6k ohm,1%,0.125W..... (80009 No. 321-0337-00)	1	
-147	MFF1816G47501F	91637	. RESISTOR,FIXED,FILM,47.5k ohm,1%,0.125W..... (80009 No. 321-0354-00)	1	
-148	MFF1816D15001D	91637	. RESISTOR,FIXED,FILM,15k ohm,0.5%,0.125W..... (80009 No. 321-0684-00)	1	
-149	MFF1816D40201D	91637	. RESISTOR,FIXED,FILM,40.2k ohm,0.5%,0.125W... (80009 No. 321-0696-00)	1	
-150	MFF1816D50000C	91637	. RESISTOR,FIXED,FILM,5k ohm,0.25%,0.125W..... (80009 No. 321-0816-03)	2	
-151	MFF1816D32001C	91637	. RESISTOR,FIXED,FILM,32k ohm,0.25%,0.125W.... (80009 No. 321-1655-03)	1	
-152	MFF1816D27001C	91637	. RESISTOR,FIXED,FILM,27k ohm,0.25%,0.125W.... (80009 No. 321-1656-03)	1	
-153	MFF1226G48700F	91637	. RESISTOR,FIXED,FILM,4.87k ohm,1%,0.50W..... (80009 No. 323-0259-00)	1	
-154	CECTO-8871F	75042	. RESISTOR,FIXED,FILM,8.87k ohm,1%,0.50W..... (80009 No. 323-0284-00)	4	
-155	CECTO-2212F	75042	. RESISTOR,FIXED,FILM,22.1k ohm,1%,0.50W..... (80009 No. 323-0322-00)	1	L
-155	CECTO-1782F	75042	. RESISTOR,FIXED,FILM,17.8k ohm,1%,0.5W..... (80009 No. 323-0313-00)	1	M
-156	129-0178-00	80009	. INSULATOR,STANDOFF,0.312 OD X 1.365 inch.... long	1	
	211-0207-00	80009	. SCREW,ASSEMBLED WASHER,4-40 X 0.312 inch,... pnh,steel (AP)	1	
-157	129-0230-00	80009	. SPACER,POST,1.375 inch long,with 4-40..... threads each end	1	

FIG. & INDEX NO.	PART NUMBER	FSCM	1 2 3 4 5 6 7 DESCRIPTION	UNITS PER ASSY	USABLE ON CODE
	211-0207-00	80009	. SCREW,ASSEMBLED WASHER,4-40 X 0.312 inch,... pnh,steel (AP)	1	
8-14-158	200-0258-00	80009	. SHIELD,CAPACITOR,plastic.....	1	
-159	214-0579-00	80009	. TERMINAL,TEST POINT,0.40 inch long.....	17	
-160	131-0566-00	80009	. LINK,TERMINAL,CONNECTOR,0.086 OD X 2.375.... inch long	7	L
-160	131-0566-00	80009	. LINK,TERMINAL,CONNECTOR,0.086 OD X 2.375.... inch long	8	M
-161	47350	22526	. CONTACT,ELECTRICAL,0.46 inch long (80009.... No. 131-0589-00)	13	
-162	47357	22526	. CONTACT,ELECTRICAL,0.365 inch long (80009... No. 131-0608-00)	10	
-163	131-1003-00	80009	. CONNECTOR,BODY,circuit board mount,3 prong..	2	
-164	000-201-4986	05574	. CONNECTOR,RECEPTACLE,circuit board,15/30,... female (80009 No. 131-2063-00)	2	
-165	C930802	01295	. SOCKET,PLUG-IN,microcircuit,8 contact..... (80009 No. 136-0514-00)	2	
-166	337-2172-00	80009	. SHIELD,ELECTRICAL,high voltage.....	1	
-167	344-0154-00	80009	. CLIP,ELECTRICAL,for 0.25 inch diameter fuse.	8	
-168	361-0608-00	80009	. SPACER,PUSH SWITCH,plastic.....	2	
-169	361-0761-00	80009	. SPACER,VARAIBLE RESISTOR,plastic.....	1	
-170	75060-012	22526	. SOCKET,PIN TERMINAL,0.188 inch long..... (80009 No. 136-0252-07)	2	
-171	198-2974-00	80009	. WIRE SET,ELECTRICAL.....	2	
-172	337-2686-00	80009	. SHIELD,ELECTRICAL,multiplier.....	1	U
-173	11620000	85471	. TAPE,PRESSURE SENSITIVE,vinyl foam,0.5 X ... 0.062 double sided adhesive (80009 No. 253-0176-00)	1	U

For Service Manuals Contact
MAURITRON TECHNICAL SERVICES
8 Cherry Tree Rd, Chinnor
Oxon OX9 4QY
Tel:- 01844-351694 Fax:- 01844-352554
Email:- enquiries@mauritron.co.uk

1 Added when required.

SECTION IX
ILLUSTRATED PARTS BREAKDOWN
NUMERICAL INDEX

PART NUMBER	FIG. & INDEX NO.	QTY PER ART.	SMR CODE
AGC 1/2	8 -2-35	1	PAFZZN
AGC 1/4	-14-43	1	PAFZZN
AGC 1	-13-72	1	PAFZZN
AGC 2	-14-42	2	PAFZZN
AGC 3/10	-14-44	1	PAFZZN
BB1005	-5-87	2	PAFZZN
BB1015	-8-54.1	4	
BB1055	-6-11	2	PAFZZN
BB1055	-6-27		
BB1215	-5-88	2	PAFZZN
BB1225	-5-89	2	PAFZZN
BB2025	-5-90	2	PAFZZN
BB2215	-6-27.1	1	PAFZZN
BB3005	-6-28	1	PAFZZN
BB4705	-5-90.1	2	
BB4715	-5-91	1	PAFZZN
BB5625	-5-92	1	PAFZZN
BB8225	-5-92	1	
BWH-R5100J	-14-82	2	PAFZZN
BWH-1R800J	-14-83	1	PAFZZN
B6310-1	-14-1	1	PAFZZN
CB-83314-CE	-2-31	2	
CB1005	-5-52	10	PAFZZN
CB1005	-8-25		
CB1005	-10-24		
CB1005	-8-37		
CB1015	-5-53	13	PAFZZN
CB1015	-8-26		
CB1015	-11-32		
CB1015	-14-94		
CB1025	-5-54	13	PAFZZN
CB1025	-8-27		
CB1025	-11-33		

PART NUMBER	FIG. & INDEX NO.	QTY PER ART.	SMR CODE
CB1025	8-14-95		
CB1035	-5-55	9	PAFZZN
CB1035	-8-28		
CB1035	-11-34		
CB1045	-11-35	3	PAFZZN
CB1045	-14-96		
CB1055	-8-29	4	PAFZZN
CB1055	-10-21		
CB1125	-10-22	2	PAFZZN
CB1125	-11-36		
CB1135	-11-37	1	PAFZZN
CB1145	-14-97	2	PAFZZN
CB1205	-14-98	1	PAFZZN
CB1215	-5-56	4	PAFZZN
CB1215	-11-38		
CB1225	-11-39	3	PAFZZN
CB1225	-14-99		
CB1235	-11-40	3	PAFZZN
CB1235	-14-100		
CB1315	-5-57	3	PAFZZN
CB1315	-6-9		
CB1315	-14-101		
CB1325	-5-58	7	PAFZZN
CB1325	-8-30		
CB1325	-11-41		
CB1325	-14-102		
CB1335	-5-59	2	PAFZZN
CB1335	-9-4		
CB1515	-5-60	4	PAFZZN
CB1515	-14-103		
CB1525	-8-32	2	PAFZZN
CB1525	-11-42		

PART NUMBER	FIG. & INDEX NO.	QTY PER ART.	SMR CODE
CB1535	8 -8-33	5	PAFZZN
CB1535	-11-43		
CB1535	-14-104		
CB1545	-8-34	1	PAFZZN
CB1625	-5-61	2	
CB1825	-5-61	5	PAFZZN
CB1825	-11-44		
CB1825	-14-105		
CB1835	-10-23	4	PAFZZN
CB1835	-11-45		
CB1835	-14-106		
CB2005	-5-62	7	PAFZZN
CB2005	-11-46		
CB2015	-5-63	4	PAFZZN
CB2015	-5-66		
CB2015	-11-47		
CB2015	-14-107		
CB2025	-5-64	4	PAFZZN
CB2025	-8-35		
CB2035	-11-48	2	PAFZZN
CB2045	-8-36	2	PAFZZN
CB2045	-14-108		
CB2215	-11-49	2	PAFZZN
CB2225	-8-38	10	PAFZZN
CB2225	-11-50		
CB2225	-14-109		
CB2235	-5-67	8	PAFZZN
CB2235	-8-39		
CB2235	-9-5		
CB2235	-10-25		
CB2235	-11-51		
CB2245	-9-6	1	PAFZZN
CB2255	-9-9	1	PAFZZN
CB2405	-5-65	2	PAFZZN
CB2415	-5-66	2	PAFZZN
CB2705	-7-22	2	PAFZZN
CB2715	-6-25	3	PAFZZN
CB2715	-8-40		
CB2725	-11-52	8	PAFZZN
CB2725	-14-110		
CB2735	-14-111	2	PAFZZN
CB3015	-5-68	4	PAFZZN
CB3015	-11-53		
CB3025	-8-41	2	PAFZZN
CB3035	-11-54	4	PAFZZN
CB3035	-14-112		
CB3305	-5-69	4	PAFZZN
CB3305	-4-72		
CB3305	-11-55		
CB3315	-11-56	1	PAFZZN
CB3325	-5-70	10	PAFZZN
CB3325	-11-57		

PART NUMBER	FIG. & INDEX NO.	QTY PER ART.	SMR CODE
CB3335	8 -8-42	1	PAFZZN
CB3355	-8-43	2	PAFZZN
CB3355	-10-26		
CB3615	-5-71	1	PAFZZN
CB3625	-5-72	4	PAFZZN
CB3625	-8-44		
CB3625	-11-58		
CB3905	-8-45	1	PAFZZN
CB3905	-14-113		
CB3915	-9-7	5	PAFZZN
CB3915	-9-19		
CB3915	-11-59		
CB3915	-14-114		
CB3935	-9-8	1	PAFZZN
CB4305	-5-73	3	PAFZZN
CB4315	-5-74	6	PAFZZN
CB4315	-5-78		
CB4315	-14-115		
CB4325	-14-116	2	PAFZZN
CB47G5	-5-40	5	PAFZZN
CB47G5	-10-13		
CB47G5	-11-29		
CB4705	-5-75	14	PAFZZN
CB4705	-5-82		
CB4705	-8-46		
CB4705	-10-27		
CB4705	-11-60		
CB4705	-14-117		
CB4715	-5-76	5	PAFZZN
CB4715	-11-61		
CB4715	-14-118		
CB4725	-11-62	8	PAFZZN
CB4725	-14-119		
CB4735	-8-47	18	PAFZZN
CB4735	-11-63		
CB4745	-5-77	4	PAFZZN
CB4745	-11-64		
CB4745	-14-120		
CB4755	-11-65	1	PAFZZN
CB51G5	-8-22	2	PAFZZN
CB5105	-4-17	4	PAFZZN
CB5105	-6-10		
CB5105	-6-26		
CB5115	-5-78	4	PAFZZN
CB5115	-14-121		
CB5125	-5-79	2	PAFZZN
CB5125	-14-122		
CB5135	-14-123		
CB5145	-8-48	2	PAFZZN
CB5145	-10-29		
CB5605	-5-80	3	PAFZZN
CB5606	-11-66	1	
CB5615	-8-49	2	PAFZZN

PART NUMBER	FIG. & INDEX NO.	QTY PER ART.	SMR CODE
CB5625	8 -5-81	2	PAFZZN
CB5625	-14-124		
CB5635	-11-67	2	PAFZZN
CB5635	-14-125		
CB5645	-11-68	1	PAFZZN
CB6205	-8-50	2	PAFZZN
CB6215	-5-83	4	PAFZZN
CB6215	-8-51		
CB6225	-11-69	2	PAFZZN
CB6235	-5-84	3	PAFZZN
CB6235	-15-126		
CB6815	-4-71	10	PAFZZN
CB6815	-5-85		
CB6815	-8-52		
CB6815	-10-28		
CB6815	-11-70		
CB6815	-14-127		
CB6845	-11-71	1	PAFZZN
CB7505	-8-31	5	PAFZZN
CB7505	-8-53		
CB7525	-10-30	2	PAFZZN
CB7525	-11-72		
CB8205	-5-86	3	PAFZZN
CB8205	-10-31		
CB8215	-11-73	2	PAFZZN
CB8215	-14-128		
CB8225	-11-74	2	PAFZZN
CB8235	-14-129	1	PAFZZN
CB9105	-11-75	2	PAFZZN
CB9115	-10-32	2	PAFZZN
CB9115	-14-130		
CB9125	-14-131	1	PAFZZN
CB9135	-8-54	3	PAFZZN
CB9135	-9-10		
CB9135	-10-33		
CD12676	-8-6	2	
CECTO-1782F	-14-155	1	
CECTO-2212F	-14-155		PAFZZN
CECTO-8871F	-14-154	4	PAFZZN
C191	-13-7	2	
C191	-13-14		
C40A820J	-11-21	2	PAFZZN
C930802	-8-58	4	PAFZZN
C930802	-11-88		
C930802	-14-165		
C931602	-10-39	4	PAFZZN
C931602	-11-87		
C932002	-8-59	2	PAFZZN

PART NUMBER	FIG. & INDEX NO.	QTY PER ART.	SMR CODE
D151E11F0	8 -5-37	1	PAFZZN
D155F201F0	-10-12	1	PAFZZN
D388-CM40910	-14-92	1	PAFZZN
EB2235	-14-76	3	PAFZZN
F-11935-6	-13-44	1	PAFZZN
FLV160	-4-12	5	PAFZZN
FLV160	-7-17		
FTSM19L1	-5-133	2	PAFZZN
GB2425	-14-77	1	PAFZZN
GB3025	-14-78	1	PAFZZN
GB4725	-14-79	1	PAFZZN
G1710-050NP0471K	-5-28	10	PAFZZN
HMF188D22503B	-9-15	2	PAFZZN
HMF188D22503B	-9-24		
J-64281	-5-138	8	PAFZZN
J-64281	-11-91		
MDA960-1	-14-36	1	
MFF1226G48700F	-14-153	1	PAFZZN
MFF1816D15001D	-14-148	1	PAFZZN
MFF1816D27001C	-14-152	1	PAFZZN
MFF1816D32001C	-14-151	1	PAFZZN
MFF1816D37501B	-9-13	4	PAFZZN
MFF1816D37501B	-9-22		
MFF1816D37502B	-9-14	4	PAFZZN
MFF1816D37502B	-9-23		
MFF1816D400R0C	-5-120	2	PAFZZN
MFF1816D40201D	-14-149	1	PAFZZN
MFF1816D50000C	-14-150	2	PAFZZN
MFF1816D75001B	-9-11	2	PAFZZN
MFF1816D75001B	-9-20		
MFF1816D75002B	-9-12	2	PAFZZN
MFF1816D75002B	-9-21		
MFF1816G10R20F	-5-93	1	PAFZZN
MFF1816G1003F	-5-119	2	PAFZZN
MFF1816G110R0F	-5-105	2	PAFZZN
MFF1816G11000F	-5-117	1	PAFZZN
MFF1816G11300F	-14-137	1	PAFZZN
MFF1816G11501F	-10-36	2	PAFZZN
MFF1816G11801F	-14-142	1	PAFZZN
MFF1816G12R70F	-5-94	1	PAFZZN
MFF1816G130R0F	-10-34	1	PAFZZN
MFF1816G133R0F	-5-106	2	PAFZZN
MFF1816G133R3D	-6-14	2	PAFZZN
MFF1816G133R3D	-6-31		
MFF1816G150R0D	-6-12	4	PAFZZN
MFF1816G150R0D	-6-29		
MFF1816G150R0F	-5-107	1	PAFZZN
MFF1816G15000F	-8-56	10	PAFZZN
MFF1816G162R0F	-5-108	1	
MFF1816G16900F	-10-35	1	PAFZZN
MFF1816G16901F	-14-143	1	PAFZZN
MFF1816G174R0F	-5-109	1	PAFZZN
MFF1816G187R0F	-14-132	1	PAFZZN
MFF1816G200R0D	-6-13	4	PAFZZN

PART NUMBER	FIG. & INDEX NO.	QTY PER ART.	SMR CODE
MFF1816G200R0D	8 -6-30		
MFF1816G21001F	-14-144	1	PAFZZN
MFF1816G22100F	-11-76	1	PAFZZN
MFF1816G23700F	-11-77	1	PAFZZN
MFF1816G24901F	-14-145	1	PAFZZN
MFF1816G26101F	-10-37	1	PAFZZN
MFF1816G26700F	-8-55	12	PAFZZN
MFF1816G287R0F	-5-110	4	PAFZZN
MFF1816G294R0F	-5-111	2	PAFZZN
MFF1816G30R10F	-5-95	2	PAFZZN
MFF1816G30100F	-14-138	1	PAFZZN
MFF1816G31601F	-14-146	1	PAFZZN
MFF1816G324R0F	-5-112	2	PAFZZN
MFF1816G332R0F	-5-113	2	PAFZZN
MFF1816G33200F	-11-78	1	PAFZZN
MFF1816G35702F	-5-118	1	PAFZZN
MFF1816G38R30F	-5-96	1	PAFZZN
MFF1816G39R20F	-5-97	1	PAFZZN
MFF1816G392R0F	-5-114	3	PAFZZN
MFF1816G39200F	-14-139	1	
MFF1816G41R20F	-5-98	1	PAFZZN
MFF1816G412R0F	-5-115	2	PAFZZN
MFF1816G42200F	-14-139		PAFZZN
MFF1816G45300F	-11-79	1	PAFZZN
MFF1816G47501F	-14-147	1	PAFZZN
MFF1816G49R90F	-5-99	3	PAFZZN
MFF1816G511R0F	-5-116	1	PAFZZN
MFF1816G52300F	-14-140	1	PAFZZN
MFF1816G54900F	-14-141	1	PAFZZN
MFF1816G56200F	-11-80	1	PAFZZN
MFF1816G60R40F	-5-100	2	PAFZZN
MFF1816G619R0F	-14-133	1	PAFZZN
MFF1816G634R0F	-14-134	1	PAFZZN
MFF1816G66R50F	-5-101	2	PAFZZN
MFF1816G665R0F	-14-135	1	PAFZZN
MFF1816G75R00F	-5-102	2	PAFZZN
MFF1816G80R60F	-5-103	2	PAFZZN
MFF1816G800R0D	-6-15	2	PAFZZN
MFF1816G800R0D	-6-32		
MFF1816G84501F	-11-81	1	PAFZZN
MFF1816G909R0F	-14-136	2	PAFZZN
MFF1816G93R10F	-5-104	1	PAFZZN
NDB475M10S	-5-36	2	
NE2T-A1AT	-14-6	2	PAFZZN
NS2BB430R0F	-5-43	2	PAFZZN
OSL-16L-100	-7-18	1	PAFZZN
PP80C823K	-14-66	1	PAFZZN
PT605C473M	-11-22	4	PAFZZN
PT605C473	-14-63		
RS2B-B16000J	-14-81	1	PAFZZN

PART NUMBER	FIG. & INDEX NO.	QTY PER ART.	SMR CODE
S039650	8 -5-11	1	PAFZZN
TEK-175-0827-00	-7-69	AR	
TEK-175-0828-00	-7-56	AR	
TEK-175-0829-00	-4-102	AR	
TEK-175-0829-00	-7-70		
TEK-175-0832-00	-13-88	AR	
11C825M075AS	-14-73	1	PAFZZN
T4-34M	-4-37	3	
UG274BUDURAPLATE	-2-2	1	PAFZZN
000-201-4986	-14-164	2	PAFZZN
010-6101-00	-2-6	1	PAFZZN
010-6104-00	-2-10	2	PAFZZN
013-0107-03	-2-19	3	PAFZZN
020-0233-00	-2-6	1	
08-56-0105	-13-87	9	
09-50-4031	-13-90	3	
1-380949-6	-9-16	4	PAFZZN
1-380949-6	-9-25		
1-380949-6	-10-40		
1-380949-8	-9-17	3	PAFZZN
1-380949-8	-10-41		
1-380949-9	-10-42	2	PAFZZN
1-480435-0	-13-84	6	
1DE104-K-220EC	-5-42	1	PAFZZN
1N3034B	-14-27	1	PAFZZN
1N3828A	-14-31	2	PAFZZN
1N4152R	-5-15	90	PAFZZN
1N4152R	-8-5		
1N4152R	-11-6		
1N4152R	-14-24		
1N937	-14-34	1	PAFZZN
1N957B	-14-39	1	PAFZZN
1N965B	-14-25	2	
1N965B	-14-28		
1N968B	-14-37.1	1	PAFZZN
1N970B	-14-26	1	PAFZZN
1N983B	-14-32	1	PAFZZN
1N989B	-14-29	1	PAFZZN
1N991B	-14-30	1	PAFZZN
103-0051-00	-2-17	3	
103-0186-01	-7-28	3	
103-0186-02	-4-26	2	
103-0186-02	-7-24		
105-0420-00	-5-121	1	
105-0421-00	-5-120	1	PAFZZN
105-0422-00	-5-128	1	
105-0423-00	-5-123	1	PAFZZN

PART NUMBER	FIG. & INDEX NO.	QTY PER ART.	SMR CODE
105-0677-00	8 -3-16	6	PAFZZN
105-0737-00	-4-80	2	
105-0738-00	-4-85	2	
105-0739-00	-3-3	2	
108-0262-00	-5-1	2	PAFZZN
108-0328-00	-5-5	2	PAFZZN
108-0422-00	-14-2	1	PAFZZN
108-0570-00	-5-3	2	PAFZZN
108-0724-00	-11-1	1	PAFZZN
108-0818-00	-12-31	1	PAFZZN
108-0819-00	-12-34	1	PAFZZN
108-0820-00	-14-4	1	PAFZZN
108-753-17	-2-15	3	
1104-00-00-0541C	-12-41	2	
1104-00-00-0541C	-13-43		
11620000	-14-173	1	
119-0860-00	-4-33	1	PAFZZN
120-0384-00	-5-6	1	PAFZZN
120-0984-00	-14-5	1	PAFZZN
120-1094-00	-5-4	2	PAFZZN
120-1095-00	-13-75	1	PAFZZN
1204-00-00-0541C	-13-21	3	
1204-00-00-0541C	-13-70		
1214-05-00-0541C	-4-93	6	
1214-05-00-0541C	-4-98		
1214-05-00-0541C	-7-54		
1214-05-00-0541C	-13-57		
129-0077-00	-13-55	1	
129-0123-00	-13-41	1	
129-0178-00	-14-156	1	PAFZZN
129-0230-00	-14-157	1	PAFZZN
129-0308-00	-12-39	1	
129-0575-00	-4-38	2	
129-0575-00	-7-63		
129-0677-00	-4-30.4	2	
1296	-2-4	1	PAFZZN
131-0472-00	-12-45	4	
131-0566-00	-5-135	13	PAFZZN
131-0566-00	-10-38		
131-0566-00	-11-82		
131-0566-00	-14-160		
131-1003-00	-5-132	4	PAFZZN
131-1003-00	-11-85		
131-1003-00	-14-163		
131-1030-00	-5-130	6	PAFZZN
131-1031-00	-5-131	7	PAFZZN
131-1758-05	-4-89	2	
131-1758-06	-4-89	2	
131-1978-00	-6-1	4	
131-1978-00	-6-16		
131-1979-00	-6-2	10	
131-1979-00	-6-17		
131-2028-00	-4-63	4	

PART NUMBER	FIG. & INDEX NO.	QTY PER ART.	SMR CODE
136-0202-01	8-13-34	1	
136-0252-07	-5-142	30	
136-0624-00	-13-30		
136-0624-01	-13-30	1	
150D106X0015B2	-11-24	1	PAFZZN
150D475X0035B2	-14-70	1	PAFZZN
150D564X0100A2	-11-27	1	PAFZZN
151-0127-00	-5-7	1	PAFZZN
151-0136-00	-14-8	1	PAFZZN
151-0164-00	-14-9	1	PAFZZN
151-0190-00	-5-8	17	PAFZZN
151-0190-00	-8-2		
151-0190-00	-11-4		
151-0190-00	-14-11		
151-0192-00	-14-12	1	PAFZZN
151-0342-00	-14-15	2	PAFZZN
151-0347-00	-14-16	5	PAFZZN
151-0349-00	-13-58	3	PAFZZN
151-0350-00	-14-17	3	PAFZZN
151-0364-00	-14-18	1	PAFZZN
151-0405-00	-14-19	1	PAFZZN
151-0426-02	-14-20		PAFZZN
151-0434-00	-5-9	4	PAFZZN
151-0446-00	-4-40	2	PAFZZN
151-0447-00	-5-10	2	PAFZZN
151-0472-00	-5-13	7	PAFZZN
151-0472-00	-8-3		
151-0701-00	-14-20	1	
151-1042-00	-8-4	4	PAFZZN
151-1042-00	-11-5		
151-1090-02	-5-14	2	PAFZZN
152-0061-00	-11-6.1	8	PAFZZN
152-0061-00	-14-21		PAFZZN
152-0061-00	-14-33		
152-0066-00	-14-22	4	PAFZZN
152-0107-04	-14-23	3	PAFZZN
152-0195-00	-14-25	1	PAFZZN
152-0217-00	-9-1	1	PAFZZN
152-0246-00	-5-16	2	
152-0269-00	-5-17	2	PAFZZN
152-0488-00	-14-35	1	PAFZZN
152-0629-00	-14-37	1	PAFZZN
152-0635-00	-14-38	1	PAFZZN
154-0777-00	-12-15	1	PAFZZN
155-0122-00	-11-7	1	PAFZZN
155-0123-00	-11-8	2	PAFZZN
155-0124-00	-10-2	1	PAFZZN
155-0151-00	-8-7	2	PAFZZN
155-0155-00	-5-18	1	PAFZZN
156-0067-00	-8-8	2	PAFZZN
156-0067-00	-14-40		
156-0158-00	-11-9	2	PAFZZN
156-0158-00	-14-41		
161-0118-00	-13-38	1	PAFZZN

PART NUMBER	FIG. & INDEX NO.	QTY PER ART.	SMR CODE
162D105X0035CD2	8-11-25	1	PAFZZN
162D225X0020CD2	-11-23	6	PAFZZN
162D274X9035BC2	-11-26	1	PAFZZN
162D275X9015CD2	-5-39	2	PAFZZN
166-0226-00	-13-79	4	
175-0124-01	-2-20	3	PAFZZN
175-0825-00	-7-67	AR	
175-0825-00	-12-51		
175-0826-00	-7-68	AR	
175-0862-00	-13-89	AR	
175-1661-00	-2-9	2	
175-1661-00	-2-13		
179-2514-00	-13-82	1	
19C242B	-14-59	1	PAFZZN
19C611	-14-58	2	PAFZZN
192P2249R8	-14-61	1	PAFZZN
198-0902-00	-13-31		
198-0902-01	-13-31	1	
198-2581-00	-4-99	2	
198-2974-00	-14-171	2	
198-3068-00	-7-55	1	
198-3416-00	-4-103	2	
198-3417-00	-7-65.1	1	
198-3418-00	-13-84	1	
2DM301	-13-3	1	PAFZZN
2D1596	-5-41	1	PAFZZN
2N2222A	-14-14	1	PAFZZN
2N2484	-14-7	1	PAFZZN
2N2907A	-14-13	2	PAFZZN
2N3906	-8-1	16	PAFZZN
2N3906	-10-1		
2N3906	-11-3		
2N3906	-14-10		
2N3947	-5-12	1	PAFZZN
2X12161-402	-4-47	34	
2X12161-402	-4-56		
2X12161-402	-4-74		
2X12161-402	-4-79		
2X12161-402	-4-83		
2X12161-402	-4-88		
2X12161-402	-7-36		
2X12161-402	-7-44		
2X12161-402	-13-59		
2X12161-402	-13-69		
2X20224-402	-4-92	5	
2X20224-402	-4-97		
2X20224-402	-7-53		
20-36435	-14-72	1	PAFZZN
200-0103-00	-13-54	1	
200-0237-03	-13-71	1	

PART NUMBER	FIG. & INDEX NO.	QTY PER ART.	SMR CODE
200-0258-00	8-14-154	1	
200-0602-00	-3-6	2	
200-0616-00	-13-33	1	
200-1544-01	-13-80	1	
200-1802-05	-13-50	1	
200-2052-00	-4-20	2	
200-2055-00	-2-34	1	
200-2055-01	-2-20	1	
200-2056-00	-2-25	1	
206-0105-00	-2-16	3	
206-0191-01	-2-8	2	
206-0191-01	-2-12		
206-0223-00	-2-7	1	
206-0224-00	-2-11	1	
206-0244-00	-2-14	1	
20704-L67-322	-13-15	1	PAFZZN
21-13900	-3-1	AR	
210-0054-00	-7-43	4	
210-0056-00	-3-13	2	
210-0202-00	-4-102.1	2	
210-0255-00	-7-31	5	
210-0255-00	-13-53		
210-0261-00	-4-19.1	1	
210-0457-00	-4-39	14	
210-0457-00	-4-51		
210-0457-00	-7-64		
210-0457-00	-13-11		
210-0457-00	-13-13		
210-0457-00	-13-63		
210-0457-00	-13-65		
210-0457-00	-13-67		
210-0551-00	-8-62	2	
210-0586-00	-4-16	8	
210-0586-00	-7-33.1		
210-0586-00	-12-30		
210-0586-00	-13-6		
210-0586-00	-13-25		
210-0586-00	-13-46		
210-0586-00	-13-65		
210-0586-00	-13-67		
210-0599-00	-4-43	4	
210-0622-00	-2-27	2	
210-0627-00	-4-41	2	
210-0761-00	-3-4	2	
210-0774-00	-13-91	4	
210-0775-00	-13-92	4	
210-0805-00	-3-14	2	
210-0812-00	-13-78	4	
210-0994-00	-3-5	10	
210-0994-00	-4-30.3		
210-0994-00	-4-55.1		

PART NUMBER	FIG. & INDEX NO.	QTY PER ART.	SMR CODE
210-0994-00	8 -7-42		
210-0994-00	-12-26		
210-1105-00	-2-24	1	
210-3067-00	-2-32	4	
210-3068-00	-2-29	6	
210-3068-00	-2-32		
2104-04-00-2520N	-13-64		
2104-06-00-2520N	-13-17	4	
2104-06-00-2520N	-13-64		
2104-06-00-2520N	-13-66		
211-0001-00	-12-17	2	
211-0007-00	-4-16	7	
211-0007-00	-4-23		
211-0007-00	-12-29		
211-0007-00	-13-28		
211-0008-00	-3-22.1	15	
211-0008-00	-4-21		
211-0008-00	-4-30.2		
211-0008-00	-4-57		
211-0008-00	-4-73		
211-0012-00	-4-32	9	
211-0012-00	-4-46		
211-0012-00	-7-35		
211-0012-00	-13-20		
211-0016-00	-13-42	2	
211-0016-00	-13-45		
211-0019-00	-7-41	4	
211-0097-00	-4-22	4	
211-0097-00	-7-35		
211-0097-00	-13-5		
211-0114-00	-4-55	1	
211-0116-00	-4-61.2	15	
211-0116-00	-4-78		
211-0116-00	-4-82		
211-0116-00	-4-87		
211-0116-00	-12-40		
211-0121-00	-4-61	7	
211-0121-00	-4-62		
211-0121-00	-7-33	1	
211-0143-00	-1-10	1	
211-0207-00	-13-40	3	
211-0207-00	-14-156		
211-0207-00	-14-157		
211-0240-00	-8-61	2	
211-0503-00	-1-4	4	
211-0503-00	-1-6		
211-0504-00	-1-13	6	
211-0504-00	-13-18		
211-0507-00	-4-50	2	
211-0510-00	-4-35	1	

PART NUMBER	FIG. & INDEX NO.	QTY PER ART.	SMR CODE
211-0511-00	8-13-51	4	
211-0516-00	-1-8	4	
211-0534-00	-1-12	12	
211-0534-00	-12-25		
211-0534-00	-13-10		
211-0534-00	-13-24		
2112D	-12-18	2	PAFZZN
212-0517-00	-13-77	4	
212-0623-00	-3-12	2	
213-0004-00	-7-10	1	
213-0048-00	-5-125	1	
213-0075-00	-4-29	9	
213-0075-00	-4-95		
213-0075-00	-7-51		
213-0113-00	-4-10	4	
213-0113-00	-7-16		
213-0113-00	-13-48		
213-0124-00	-13-16	2	
213-0138-00	-4-19.2	5	
213-0138-00	-4-102.2		
213-0138-00	-7-62		
213-0146-00	-4-53	8	
213-0146-00	-7-58		
213-0146-00	-7-61		
213-0153-00	-4-2	4	
213-0153-00	-7-6		
213-0153-00	-13-36		
213-0183-00	-4-34	6	
213-0183-00	-12-21		
213-0227-00	-3-9	4	
213-0243-00	-7-8	2	
213-0313-00	-12-13	4	
214-0368-00	-4-44	2	
214-0515-02	-3-11	2	
214-0516-00	-3-10	2	
214-0579-00	-5-137	26	PAFZZN
214-0579-00	-10-43		
214-0579-00	-11-89		
214-0579-00	-14-159		
214-1126-01	-4-75	6	
214-1126-01	-5-126		
214-1126-02	-8-63	4	
214-1127-00	-5-127	6	
214-1127-00	-8-64		
214-1138-00	-4-48	2	PAFZZN
214-1139-02	-7-47	4	
214-1752-00	-4-76	4	
214-1779-00	-5-122	1	
214-1987-00	-3-15	2	
214-2270-00	-3-20	2	
214-2270-00	-12-28		
214-2292-04	-8-9	2	PAFZZN
214-2294-02	-8-10	2	PAFZZN
214-2329-00	-4-13	2	

PART NUMBER	FIG. & INDEX NO.	QTY PER ART.	SMR CODE
337-2387-00	8 -4-65	2	
337-2388-00	-13-39	1	
337-2392-00	-3-22	1	
337-2497-00	-4-30.1	1	
337-2686-00	-14-172	1	
3386F-T04-101	-10-14	1	PAFZZN
3386F-T04-102	-10-16	1	PAFZZN
3386F-T04-251	-14-84	1	PAFZZN
3386F-T04-501	-10-15	1	PAFZZN
342-0163-00	-13-61	3	
342-0297-00	-13-30	1	
342-0308-00	-3-19	1	
342-0366-00	-4-14	1	
342-0367-00	-7-21	1	
343-0088-00	-7-59	1	
343-0097-00	-4-42	2	PAFZZN
343-0519-00	-5-140	1	PAFZZN
343-0523-00	-12-12	1	
343-0528-00	-13-19	1	
343-0582-00	-4-34	2	
343-0681-00	-4-86	2	
344-0046-00	-2-18	3	PAFZZN
344-0154-00	-14-167	8	PAFZZN
345002	-13-73	1	PAFZZN
348-0070-01	-13-22.1	1	
348-0080-01	-3-24	4	PAFZZN
348-0141-00	-13-22	2	
348-0141-00	-13-29		
348-0171-00	-12-26	1	
348-0434-00	-13-49	4	PAFZZN
348-0524-00	-2-30	1	
351-0355-00	-5-129	1	
351-0359-00	-5-123	1	
351-0448-01	-8-60	4	
3515-14-11	-3-18	6	
352-0161-00	-7-71	1	
352-0162-00	-7-72	2	
352-0162-00	-13-31		
352-0164-00	-4-101	5	
352-0164-00	-7-73		
352-0167-00	-13-93	2	
352-0169-00	-4-105	8	PAFZZN
352-0169-00	-7-74		
352-0169-00	-12-36		
352-0169-00	-12-48		
352-0169-01	-12-33	1	PAFZZN
352-0198-00	-12-50	1	
352-0199-00	-13-94	3	
352-0262-00	-4-45	2	PAFZZN
352-0477-00	-4-11	6	PAFZZN
352-0477-00	-7-19		

PART NUMBER	FIG. & INDEX NO.	QTY PER ART.	SMR CODE
354-0195-00	8-12-11	2	
354-0442-01	-7-9	1	PAFZZN
3540S-561-103	-7-2	1	PAFZZN
358-0550-00	-4-8	11	
358-0550-00	-7-13		
358-0550-00	-12-6		
358-0569-00	-7-12	1	
36C600	-10-11	1	PAFZZN
361-0383-00	-5-139	2	PAFZZN
361-0384-00	-10-44	2	PAFZZN
361-0385-00	-11-90	4	PAFZZN
361-0608-00	-8-65	6	
361-0608-00	-10-45		
361-0608-00	-14-168		
361-0761-00	-14-169	1	
366-1031-02	-4-2	2	PAFZZN
366-1219-00	-7-7	1	PAFZZN
366-1346-02	-7-5	1	PAFZZN
366-1512-00	-4-6	1	PAFZZN
366-1559-00	-4-4	16	
366-1559-00	-7-4		
366-1559-00	-12-4		PAFZZN
366-1722-01	-4-3	2	PAFZZN
366-1723-00	-4-5	1	PAFZZN
367-0233-00	-3-8	1	
374-001C0H0479D	-5-24.1	1	
374-001C0J0229B	-6-21	1	
374-001C0J0229B	-6-18	1	
374-005C0G0130G	-6-23	1	
374011C0G100C	-6-22	1	
374005C0H0909B	-6-23	1	
374-005C0G909B	-6-23.1	1	PAFZZN
374005C0H0789B	-6-7	1	
376-0029-00	-4-28	3	
376-0029-00	-4-94		
376-0039-00	-7-50	1	
376-0127-00	-13-2	1	PAFZZN
376-0141-00	-7-50		
376-0146-00	-5-124	1	
376-0182-00	-4-84	2	
378-0614-00	-12-19	1	
380-0421-00	-5-141	1	
381-CM40943	-10-20	1	PAFZZN
381-CM40951	-10-19	1	PAFZZN
381CM40934	-4-96	2	PAFZZN
381CM40935	-7-52	1	PAFZZN
384-1056-00	-4-24	2	
384-1099-00	-4-25	2	
384-1099-00	-7-23		
384-1101-00	-7-27	3	
384-1129-00	-7-26	2	
384-1129-00	-12-5		
384-1136-00	-7-25	1	

PART NUMBER	FIG. & INDEX NO.	QTY PER ART.	SMR CODE
384-1311-01	8-13-1	1	PAFZZN
384-1322-00	-7-45	1	
384-1341-00	-7-29	4	
384-1348-00	-12-2	2	
384-1350-00	-12-3	1	PAFZZN
384-1350-02	-4-1	6	PAFZZN
384-1350-02	-7-11		
384-1350-02	-12-1		
384-1351-00	-13-35	1	
384-1366-00	-7-3	2	PAFZZN
384-1389-01	-4-24	1	PAFZZN
384-1390-00	-7-26	3	
384-1456-00	-4-27	2	
384-1457-00	-4-30	1	
3845Z-X52-505Z	-14-93	1	PAFZZN
3858Z-B78/203A	-14-91	1	PAFZZN
3858Z-X03-203E	-8-24	2	PAFZZN
3859Z-X04-202A	-14-90	1	PAFZZN
3859Z-X05-103F	-14-89	1	PAFZZN
386-2275-00	-2-33	2	
386-3156-00	-7-55	1	
386-3305-00	-12-37	1	
386-3336-00	-12-20	1	
386-3518-00	-12-27	1	
386-3519-00	-13-9	1	
386-3689-00	-2-28	1	
386-3691-00	-13-81	1	
388-CM40915	-4-91	2	PAFZZN
388-4703-00	-12-16	1	
390-0449-02	-3-2	1	
390-049X5P0220K	-4-67.1	4	PAFZZN
390-049X5P0220K	-5-25		
390049X5P0151K	-5-27.1	5	
390049X5P0151K	-8-16		PAFZZN
390049X5P0151K	-9-3		
390049X5P0151K	-11-18		
390049X5P0470K	-11-13	1	PAFZZN
390049X5P0680K	-5-27	4	PAFZZN
390049X5P0680K	-9-2		
390049X5P0680K	-11-17		
390049X5P0820K	-5-29	2	PAFZZN
390049X5P0820K	-8-19		
401-0322-00	-7-48	4	
401-0369-00	-4-81	2	
401-0370-00	-4-77	4	
407-1909-00	-4-15	2	
407-1922-00	-4-49	1	
410P103	-5-38	1	PAFZZN
426-1072-00	-4-7	18	PAFZZN
426-1072-00	-7-14		
426-1072-00	-12-7		
426-1240-00	-12-23	1	
42617-2	-13-83	6	

PART NUMBER	FIG. & INDEX NO.	QTY PER ART.	SMR CODE
430P522	8-14-60	1	PAFZZN
441-1259-03	-3-23	1	
441-1260-00	-13-23	1	
441-1261-03	-4-103	1	
441-1364-00	-4-60	2	
441-1365-00	-4-99	2	
441-1366-00	-7-65	1	
450-4352-01-0318	-12-9	2	PAFZZN
4522-5050-2C	-13-4	1	
461-S-70	-7-1	1	
46231	-12-46	18	
46231	-12-49		
46231	-13-85		
470-3NT34	-2-1	2	PAFZZN
4704-04-02	-13-60	3	
47350	-5-134	63	PAFZZN
47350	-11-83		
47350	-14-161		
47357	-5-134	85	PAFZZN
47357	-8-57		
47357	-11-84		
47357	-14-162		
47439	-4-100	70	PAFZZN
47439	-7-66		
47439	-12-32		
47439	-12-35		
47439	-12-47		
47439	-13-32		
47439	-13-86		
5-16-6BH	-13-8	2	
5-16-6BH	-13-12		
5R2-1	-2-26	1	PAFZZN
5S10-8	-2-22	1	PAFXXN
5S3-1	-2-23	1	
500D105F150BA7	-14-69	1	
502D226	-11-28	4	
502D226	-14-74		
502D227	-14-75	1	PAFZZN
5115-18-.010	-3-17	6	PAFZZN
513-001 5-30	-5-22	1	
513-001-A-2.0-10	-5-22	3	PAFZZN
513-001-A-2.0-10	-5-23		PAFZZN
518-000A2.5-9	-5-23.1	1	PAFZZN
518-000A5-15	-5-23	1	
530-002	-14-46	1	PAFZZN
530584	-4-104	16	
538-011B7-25	-11-12	2	PAFZZN
57-0180-7D-500B	-5-2	10	PAFZZN
57-0180-7D-500B	-11-2		
670-3551-02	-7-49	1	PAFFDT
670-4846-00	-7-60	1	PAFFDT
670-4847-00	-7-32	1	PAFFDT

PART NUMBER	FIG. & INDEX NO.	QTY PER ART.	SMR CODE
670-4848-00	8 -7-40	1	PAFFDT
670-4849-00	-4-52		PAFFDT
670-4850-00	-4-90	1	
670-4850-01	-4-90	1	
670-4852-00	-4-62	2	
670-4853-00	-13-37	1	PAFFDT
670-4855-00	-7-57	1	PAFFDT
672-0613-00	-1-5	1	PAFFDT
672-0614-00	-7-36.1	1	PAFFDT
672-0615-00	-1-3	1	PAFFDT
672-0616-00	-4-54	1	PAFFDT
672-0617-00	-4-54	1	PAFFDT
70F183A1	-14-3	1	PAFFDT
75060-012	-4-64	100	PAFZZN
75060-012	-5-136		
75060-012	-5-142		
75060-012	-11-86		
75060-012	-14-170		
763	-12-38		
8005-D-C0G-150K	-5-30	8	PAFZZN
8005-D-C0G-150K	-8-17		
8005-D-C0G-150K	-10-8.1		
8005-D-C0G-150K	-11-20		
8005-100-C0G201J	-5-31	2	PAFZZN
8005D9AABZ5U104M	-5-26	21	PAFZZN
8005D9AABZ5U104M	-8-18		
8005D9AABZ5U104M	-10-9		
8005D9AABZ5U104M	-11-16		
8005D9AABZ5U104M	-14-53		
8005H9AADW5R103K	-8-15	29	PAFZZN
8005H9AADW5R103K	-11-15		
8005H9AADW5R103K	-14-52		

PART NUMBER	FIG. & INDEX NO.	QTY PER ART.	SMR CODE
8005H9AADW5R471K	8 -5-27.1	15	
8005H9AADW5R471K	-5-28		PAFZZN
8005H9AADW5R471K	-11-19		
8005H9AADW5R472K	-8-14	12	PAFZZN
8015-D-C0G709M	-4-66	2	
8035D9AADC0G270M	-5-25.1	2	
8111A208E102Z	-5-35	1	PAFZZN
8111B061C0G220J	-6-20	1	PAFZZN
8131N039Z5U-104Z	-14-56	1	PAFZZN
8131N145 A 332J	-5-34	1	PAFZZN
8131N145 E 104Z	-5-36	6	PAFZZN
8131N300Z5U0103P	-5-32	2	PAFZZN
855-558Z5U-103Z	-14-54	2	PAFZZN
91A R2500	-5-49	1	
91A-100R0M	-4-68	3	PAFZZN
91A-100R0M	-5-51		
91A-10001M	-5-48	6	PAFZZN
91A-10001M	-10-17		
91A-10001M	-11-30		
91A-200R0M	-6-8	2	PAFZZN
91A-200R0M	-6-24		
91A-20000M	-14-88	1	PAFZZN
91A-20001M	-5-47	1	PAFZZN
91A-20002M	-14-85	1	PAFZZN
91A-250R0M	-5-50	1	PAFZZN
91A-25000M	-11-31	2	PAFZZN
91A-25000M	-14-87		
91A-25001M	-14-86	1	PAFZZN
91A-50000M	-5-49	5	PAFZZN
91A-50000M	-8-23		
91A-50000M	-10-18		
9663-1 NT-34	-4-19	2	PAFZZN

SECTION X
ILLUSTRATED PARTS BREAKDOWN
REFERENCE DESIGNATION INDEX

REFERENCE DESIGNATION	FIG. & INDEX NO.	MFR. PART NUMBER	TEKTRONIX PART NUMBER
A1	8 -4-90	670-4850-00	670-4850-00
A2	-4-62	670-4852-00	670-4852-00
A3	-4-90	670-4850-01	670-4850-01
A4	-4-62	670-4852-00	670-4852-00
A5	-4-52	670-4849-00	670-4849-00
A6	-7-57	670-4855-00	670-4855-00
A7	-7-32	670-4847-00	670-4847-00
A8	-7-60	670-4846-00	670-4846-00
A9	-7-40	670-4848-00	670-4848-00
A10	-7-49	670-3551-02	670-3551-02
A11	-13-37	670-4853-00	670-4853-00
A12	-12-16	388-4703-00	388-4703-00
CR235	-14-24	1N4152	152-0141-02
CR236	-14-24	1N4152	152-0141-02
CR351	-14-24	1N4152	152-0141-02
CR352	-14-24	1N4152	152-0141-02
CR353	-14-24	1N4152	152-0141-02
CR358	-14-24	1N4152	152-0141-02
CR372	-14-24	1N4152	152-0141-02
CR373	-14-24	1N4152	152-0141-02
CR504	-14-24	1N4152	152-0141-02
CR505	-14-24	1N4152	152-0141-02
CR506	-14-24	1N4152	152-0141-02
CR507	-14-21	152-0061-00	152-0061-00
CR513	-14-24	1N4152	152-0141-02
CR514	-14-24	1N4152	152-0141-02
CR518	-14-24	1N4152	152-0141-02
CR524	-14-21	152-0061-00	152-0061-00
CR525	-14-21	152-0061-00	152-0061-00
CR528	-14-24	1N4152	152-0141-02
CR541	-14-21	152-0061-00	152-0061-00
CR552	-14-23	152-0107-04	152-0107-04
CR553	-14-23	152-0107-04	152-0107-04
CR554	-14-33	152-0061-00	152-0061-00
CR555	-14-23	152-0107-04	152-0107-04

REFERENCE DESIGNATION	FIG. & INDEX NO.	MFR. PART NUMBER	TEKTRONIX PART NUMBER
CR556	8-14-24	1N4152	152-0141-02
CR557	-14-33	152-0061-00	152-0061-00
CR582	-14-37	152-0629-00	152-0629-00
CR584	-14-22	152-0066-00	152-0066-00
CR721	-14-35	152-0488-00	152-0488-00
CR734	-14-24	1N4152	152-0141-02
CR735	-14-24	1N4152	152-0141-02
CR738	-14-22	152-0066-00	152-0066-00
CR741	-14-36	MDA960-1	152-0556-00
CR744[1]	-14-24	1N4152	152-0141-02
CR748	-14-22	152-0066-00	152-0066-00
CR762	-14-24	1N4152	152-0141-02
CR763	-14-24	1N4152	152-0141-02
CR764	-14-24	1N4152	152-0141-02
CR765	-14-24	1N4152	152-0141-02
CR766	-14-24	1N4152	152-0141-02
CR768	-14-22	152-0066-00	152-0066-00
CR2112	-8-6	CD12676	152-0246-00
CR2114	-8-5	1N4152	152-0141-02
CR2126	-8-5	1N4152	152-0141-02
CR2146	-8-5	1N4152	152-0141-02
CR2213	-8-6	CD12676	152-0246-00
CR2214	-8-5	1N4152	152-0141-02
CR2261	-8-5	1N4152	152-0141-02
CR2262	-8-5	1N4152	152-0141-02
CR2284	-7-18	OSL-16L-100	150-1017-00
CR2297	-8-5	1N4152	152-0141-02
CR2298	-8-5	1N4152	152-0141-02
CR2299	-8-5	1N4152	152-0141-02
CR2605	-11-6	1N4152	152-0141-02
CR2607	-11-6	1N4152	152-0141-02
CR2608	-11-6	1N4152	152-0141-02
CR2609	-11-6	1N4152	152-0141-02
CR2612	-11-6	1N4152	152-0141-02
CR2617	-11-6	1N4152	152-0141-02
CR2618	-11-6	1N4152	152-0141-02
CR2621	-11-6	1N4152	152-0141-02
CR2622	-11-6	1N4152	152-0141-02
CR2623	-11-6	1N4152	152-0141-02
CR2630	-11-6	1N4152	152-0141-02
CR2655	-11-6	1N4152	152-0141-02
CR2656	-11-6	1N4152	152-0141-02
CR2658	-11-6	1N4152	152-0141-02
CR2675	-11-6	1N4152	152-0141-02
CR2686	-11-6	1N4152	152-0141-02
CR2690	-11-6	1N4152	152-0141-02
CR2692	-11-6	1N4152	152-0141-02
CR2694	-11-6	1N4152	152-0141-02
CR2695	-11-6	1N4152	152-0141-02
CR2696	-11-6	1N4152	152-0141-02
CR2698	-11-6.1	152-0061-00	152-0061-00
CR2705	-11-6	1N4152	152-0141-02
CR2706	-11-6	1N4152	152-0141-02

See end of Section for footnotes.

REFERENCE DESIGNATION	FIG. & INDEX NO.	MFR. PART NUMBER	TEKTRONIX PART NUMBER
CR2707	8-11-6	1N4152	152-0141-02
CR2708	-11-6	1N4152	152-0141-02
CR2709	-11-6	1N4152	152-0141-02
CR2710	-11-6	1N4152	152-0141-02
CR2711	-11-6	1N4152	152-0141-02
CR2716	-11-6	1N4152	152-0141-02
CR2717	-11-6	1N4152	152-0141-02
CR2718	-11-6	1N4152	152-0141-02
CR2741	-11-6	1N4152	152-0141-02
CR2742	-11-6	1N4152	152-0141-02
CR2743	-11-6	1N4152	152-0141-02
CR2755	-7-17	150-1001-02	150-1001-02
CR2756	-11-6	1N4152	152-0141-02
CR2757	-11-6	1N4152	152-0141-02
CR2759	-11-6	1N4152	152-0141-02
CR2763	-11-6	1N4152	152-0141-02
CR2764	-11-6	1N4152	152-0141-02
CR2765	-11-6	1N4152	152-0141-02
CR2766	-11-6	1N4152	152-0141-02
CR2767	-11-6	1N4152	152-0141-02
CR2773	-11-6	1N4152	152-0141-02
CR2774	-11-6	1N4152	152-0141-02
CR2778	-11-6	1N4152	152-0141-02
CR2786	-11-6	1N4152	152-0141-02
CR2788	-11-6	1N4152	152-0141-02
CR2795	-11-6	1N4152	152-0141-02
CR2798	-11-6.1	152-0061-00	152-0061-00
CR2920	-7-17	150-1001-02	150-1001-02
CR3129	-7-17	150-1001-02	150-1001-02
CR4124	-5-16	CD12676	152-0246-00
CR4129	-5-15	1N4152	152-0141-02
CR4142	-4-12	150-1001-02	150-1001-02
CR4224	-5-16	CD12676	152-0246-00
CR4229	-5-15	1N4152	152-0141-02
CR4242	-4-12	150-1001-02	150-1001-02
CR4284	-5-15	1N4152	152-0141-02
CR4312	-5-15	1N4152	152-0141-02
CR4318	-5-15	1N4152	152-0141-02
CR4322	-5-15	1N4152	152-0141-02
CR4328	-5-15	1N4152	152-0141-02
CR4382	-5-15	1N4152	152-0141-02
CR4416	-5-17	152-0269-00	152-0269-00
CR4417	-5-17	152-0269-00	152-0269-00
CR4418	-5-15	1N4152	152-0141-02
CR4419	-5-15	1N4152	152-0141-02
C232	-14-47	2222-801-96138	281-0214-00
C233	-14-49	314-009C0K229D	281-0756-00
C236	-14-61	192P2249R8	285-1098-00
C244	-14-65	223K02PT485	285-1101-00
C246	-14-51	314-022Z5U0222M	281-0771-00
C272	-14-47	2222-801-96138	281-0214-00
C273	-14-49	314-009C0K229D	281-0756-00
C284	-14-65	223K02PT485	285-1101-00

REFERENCE DESIGNATION	FIG. & INDEX NO.	MFR. PART NUMBER	TEKTRONIX PART NUMBER
C286	8-14-51	314-022Z5U0222M	281-0771-00
C288	-14-53	8005H9AABZ5U104M	281-0775-00
C354	-14-58	19C611	283-0080-00
C376	-14-64	223J02PT485	285-1100-00
C383	-14-50	314-022X5P101M	281-0766-00
C386	-14-70	150D475X0035B2	290-0187-00
C503	-14-58	19C611	283-0080-00
C515	-14-46	530-002	281-0064-00
C516	-14-48	2222-801-96139	281-0220-00
C518	-14-55	273C20	283-0010-00
C522	-14-62	332K06PP481	285-1095-00
C523	-14-57	274C10	283-0057-00
C524	-14-57	274C10	283-0057-00
C528	-14-56	8131N039Z5U-104Z	283-0024-00
C533	-14-63	PT605C473M	285-1099-00
C543	-14-69	30D105F150BA2	290-0164-00
C546	-14-53	8005H9AABZ5U104M	281-0775-00
C548	-14-66	PP680C823K	285-1119-00
C558	-14-73	T11C825M075AS	290-0716-00
C564	-14-60	430P522	285-1040-00
C566	-14-62	332K06PP481	285-1095-00
C572	-14-52	8005H9AADW5R103K	281-0773-00
C575	-14-52	8005H9AADW5R103K	281-0773-00
C576	-14-53	8005H9AABZ5U104M	281-0775-00
C577	-14-53	8005H9AABZ5U104M	281-0775-00
C582	-14-75	502D227	290-0758-00
C584	-14-68	30D205F150BB9	290-0159-00
C707	-14-59	19C242B	283-0110-00
C708	-14-54	855-558Z5U-103Z	283-0003-00
C709	-14-54	855-558Z5U-103Z	283-0003-00
C721	-14-72	20-36435	290-0586-01
C722	-14-50	314-022X5P101M	281-0766-00
C723	-14-63	PT605C473M	285-1099-00
C725	-14-65	223K02PT485	285-1101-00
C735	-14-63	PT605C473M	285-1099-00
C738	-14-67	30D506G050DD9	290-0117-00
C741	-14-71	290-0508-01	290-0508-01
C743	-14-50	314-022X5P101M	281-0766-00
C748	-14-74	502D226	290-0746-00
C761	-14-71	290-0508-01	290-0508-01
C763	-14-50	314-022X5P101M	281-0766-00
C768	-14-74	502D226	290-0746-00
C773	-14-53	8005H9AABZ5U104M	281-0775-00
C2103	-8-12	314-011C0K189B	281-0755-00
C2104	-8-19	390049X5P0820K	281-0792-00
C2105	-8-17	8005-D-C0G-150K	281-0797-00
C2106	-8-13	314-011C0G220K	281-0760-00
C2109	-8-15	8005H9AADW5R103K	281-0773-00
C2118	-8-15	8005H9AADW5R103K	281-0773-00
C2119	-8-15	8005H9AADW5R103K	281-0773-00
C2130	-8-14	8005H9AADW5R472K	281-0772-00
C2131	-8-14	8005H9AADW5R472K	281-0772-00
C2132	-8-14	8005H9AADW5R472K	281-0772-00

REFERENCE DESIGNATION	FIG. & INDEX NO.	MFR. PART NUMBER	TEKTRONIX PART NUMBER
C2133	8 -8-14	8005H9AADW5R472K	281-0772-00
C2144	-8-15	8005H9AADW5R103K	281-0773-00
C2161	-8-21	290-0776-00	290-0776-00
C2162	-8-21	290-0776-00	290-0776-00
C2170	-8-16	3900R4X5P0151K	281-0786-00
C2172	-8-14	8005H9AADW5R472K	281-0772-00
C2175	-8-17	8005-D-C0G-150K	281-0797-00
C2182	-8-15	8005H9AADW5R103K	281-0773-00
C2186	-8-15	8005H9AADW5R103K	281-0773-00
C2190	-8-15	8005H9AADW5R103K	281-0773-00
C2198	-8-15	8005H9AADW5R103K	281-0773-00
C2199	-8-15	8005H9AADW5R103K	281-0773-00
C2203	-10-5	314-011C0K189B	281-0755-00
C2204	-10-7	314022X5P0101J	281-0765-00
C2205	-10-10	314-011C0G150J	281-0787-00
C2206	-10-6	314-011C0G220K	281-0760-00
C2212	-8-15	8005H9AADW5R103K	281-0773-00
C2216[1]	-8-17	8005-D-C0G-150K	281-0797-00
C2218	-8-15	8005H9AADW5R103K	281-0773-00
C2226	-8-21	290-0776-00	290-0776-00
C2227	-8-21	290-0776-00	290-0776-00
C2229	-8-15	8005H9AADW5R103K	281-0773-00
C2230	-8-14	8005H9AADW5R472K	281-0772-00
C2331	-8-14	8005H9AADW5R472K	281-0772-00
C2232	-8-14	8005H9AADW5R472K	281-0772-00
C2233	-8-14	8005H9AADW5R472K	281-0772-00
C2243	-8-15	8005H9AADW5R103K	281-0773-00
C2246	-8-15	8005H9AADW5R103K	281-0773-00
C2248	-8-15	8005H9AADW5R103K	281-0773-00
C2256	-8-16	390049X5P0151K	281-0786-00
C2258	-8-14	8005H9AADW5R472K	281-0772-00
C2265	-8-15	8005H9AADW5R103K	281-0773-00
C2275[1]	-8-17	8005-D-C0G-150K	281-0797-00
C2278	-8-15	8005H9AADW5R103K	281-0773-00
C2279	-8-15	8005H9AADW5R103K	281-0773-00
C2280	-8-20	223K02PT485	285-1101-00
C2284	-8-14	8005H9AADW5R472K	281-0772-00
C2287	-8-18	8005H9AABZ5U104M	281-0775-00
C2297	-8-15	8005H9AADW5R103K	281-0773-00
C2351	-10-8.1	8005-D-C0G-150K	281-0797-00
C2625	-11-15	8005H9AADW5R103K	281-0773-00
C2634	-11-19	8005H9AADW5R471K	281-0788-00
C2638	-11-15	8005H9AADW5R103K	281-0773-00
C2641	-11-16	8005H9AABZ5U104M	281-0775-00
C2652	-11-15	8005H9AADW5R103K	281-0773-00
C2683	-11-21	C40A820J	281-0816-00
C2684	-11-12	538-011B7-25	281-0160-00
C2685	-11-23	162D225X0020CD2	290-0136-00
C2686	-11-20	8005-D-C0G-150K	281-0797-00
C2691	-11-15	8005H9AADW5R103K	291-0773-00
C2703	-11-15	8005H9AADW5R103K	291-0773-00
C2712	-11-23	162D225X0020CD2	290-0136-00
C2719	-11-16	8005H9AABZ5U104M	281-0775-00

See end of Section for footnotes.

REFERENCE DESIGNATION	FIG. & INDEX NO.	MFR. PART NUMBER	TEKTRONIX PART NUMBER
C2744	8-11-23	162D225X0020CD2	290-0136-00
C2752	-11-16	8005H9AABZ5U104M	281-0775-00
C2757	-11-26	162D274X9035BC2	290-0288-00
C2758	-11-17	390049X5P0680K	281-0785-00
C2759	-11-17	390049X5P0680K	281-0785-00
C2762	-11-19	8005H9AADW5R471K	281-0788-00
C2763	-11-15	8005H9AADW5R103K	281-0773-00
C2764	-11-22	PT605C473M	285-1099-00
C2765	-11-27	150D564X0100A2	290-0327-00
C2766	-11-23	162D225X0020CD2	290-0136-00
C2767	-11-24	150D106X0015B2	290-0167-00
C2773	-11-14	314-022X5P0102M	281-0770-00
C2781	-11-25	162D105X0035CD2	290-0267-00
C2783	-11-21	C40A820J	281-0816-00
C2784	-11-12	538-011B7-25	281-0160-00
C2785	-11-23	162D225X0020CD2	290-0136-00
C2786	-11-20	8005-D-C0G-150K	281-0797-00
C2788	-11-15	8005H9AADW5R103K	281-0773-00
C2789	-11-23	162D225X0020CD2	290-0136-00
C2791	-11-15	8005H9AADW5R103K	281-0773-00
C2794	-11-13	390049X5P0470K	281-0763-00
C2798	-11-18	390049X5P0151K	281-0786-00
C2812	-11-28	502D226	290-0746-00
C2814	-11-28	502D226	290-0746-00
C2911	-10-9	8005H9AABZ5U104M	281-0775-00
C2913	-10-11	36C600	283-0081-00
C2917	-10-8	314022X5P0102M	281-0770-00
C2919	-10-9	8005H9AABZ5U104M	281-0775-00
C2941	-10-12	D155F201F0	283-0672-00
C3122	-9-2	390049X5P0680K	281-0785-00
C3125A	-7-37	285-0753-00	285-0753-00
C3125B	-7-38	285-0782-00	285-0782-00
C3125C	-7-39	285-1060-01	285-1060-01
C3125D	-7-38	285-0782-00	285-0782-00
C3125E	-7-37	285-0753-00	285-0753-00
C3137	-9-3	390049X5P0151K	281-0786-00
C3242	-9-18	301-000U2J0680K	281-0549-00
C4101	-4-59	2222-801-96138	281-0214-00
C4102	-4-18	285-1132-00	285-1132-00
C4104	-4-70	307-1014-04	307-1014-04
C4105	-4-70	307-1014-04	307-1014-04
C4106	-4-67.1	390-049X5P0220K	281-0759-00
C4107	-4-69	307-1013-04	307-1013-04
C4108	-4-69	307-1013-04	307-1013-04
C4109	-4-67	301-000C0J0339C	281-0534-00
C4110	-4-66	8015-D-C0G709M	281-0808-00
C4123	-5-32	8131N300Z5U0103P	283-0005-00
C4125 [1]	-5-36	NDB475M105	290-0524-00
C4158 [2]	5-22.1	301-000C0J0279C	281-0547-00
C4159	-5-35	8111A208E102Z	283-0156-00
C4160	-6-4	301-000C0G0210F	281-0620-00
C4162	-6-5	301-000C0J0399C	281-0593-00
C4165	-6-3	301-050C0G0180J	281-0578-00

See end of Section for footnotes.

REFERENCE DESIGNATION	FIG. & INDEX NO.	MFR. PART NUMBER	TEKTRONIX PART NUMBER
C4167	8 -6-7	374005C0H0789B	281-0717-00
C4168	-6-6	301-000C0J0229C	281-0604-00
C4173[1]	-5-22	513-001 5-30	281-0219-00
C4174[1]	-5-22	513-001 5-30	281-0219-00
C4175	-5-31	8005-100-C0G201J	281-0809-00
C4176	5-25.1	8035D9AADC0G270M	281-0762-00
C4191[1]	-5-36	8131N145 E 104Z	283-0178-00
C4192[1]	-5-36	8131N145 E 104Z	283-0178-00
C4201	-4-59	2222-801-96138	281-0214-00
C4202	-4-18	285-1132-00	285-1132-00
C4204	-4-70	307-1014-04	307-1014-04
C4205	-4-70	307-1014-04	307-1014-04
C4206	4-67.1	390-049X5P0220K	281-0759-00
C4207	-4-69	307-1013-04	307-1013-04
C4208	-4-69	307-1013-04	307-1013-04
C4209	-4-67	301-000C0J0339C	281-0534-00
C4210	-4-66	8015-D-C0G709M	281-0808-00
C4223	-5-32	8131N300Z5U0103P	283-0005-00
C4225[1]	-5-36	NDB475M10S	290-0524-00
C4258[2]	-5-22.1	301-000C0J0279C	281-0547-00
C4259	-6-23.1	374-005C0G909B	281-0789-00
C4260	-6-22	374-011C0G0100C	281-0634-00
C4262	-6-18	374-001C0J0229B	281-0610-00
C4265	-6-19	301-000C0G0240J	281-0564-00
C4266	-6-20	8111B061C0G220J	283-0154-00
C4267[1]	-6-23	374-005C0G0130G	281-0657-00
C4268[1]	-6-21	374-001C0J0229B	281-0610-00
C4271	-5-23.1	518-000A2.5-9	281-0122-00
C4272	-5-30	8005-D-C0G-150K	281-0797-00
C4273[1]	-5-36	8131N145 E 104Z	283-0178-00
C4275	-5-31	8005-100-C0G201J	281-0809-00
C4276	-5-25.1	8035D9AADC0G270M	281-0762-00
C4286[1]	-5-27.1	8005H9AADW5R471K	281-0788-00
C4287	-5-26	8005H9AABZ5U104M	281-0775-00
C4288	-5-26	8005H9AABZ5U104M	281-0775-00
C4289[1]	-5-28	G1710-050NP0471K	281-0823-00
C4292[1]	-5-36	8131N145 E 104Z	283-0178-00
C4316	-5-38	410P103	285-0643-00
C4327	-5-26	8005H9AABZ5U104M	281-0775-00
C4333	-5-39	162D275X9015CD2	290-0263-00
C4335	-5-27	390049X5P0680K	281-0785-00
C4336	-5-39	162D275X9015CD2	290-0263-00
C4340[1]	-5-24.1	374-001C0H0479D	281-0618-00
C4342[1]	-5-23	518-000A5-15	281-0161-00
C4349[1]	-5-28	G1710-050NP0471K	281-0823-00
C4359[1]	-5-28	G1710-050NP0471K	281-0823-00
C4363[1]	-5-28	G1710-050NP0471K	281-0823-00
C4365	-5-25	390-049X5P0220K	281-0759-00
C4373[1]	-5-28	G1710-050NP0471K	281-0823-00
C4375	-5-25	390-049X5P0220K	281-0759-00
C4376	-5-26	8005H9AABZ5U104M	281-0775-00
C4377	-5-26	8005H9AABZ5U104M	281-0775-00
C4388	-5-30	8005-D-C0G-150K	281-0797-00

See end of Section for footnotes.

REFERENCE DESIGNATION	FIG. & INDEX NO.	MFR. PART NUMBER	TEKTRONIX PART NUMBER
C4389	8 -5-37	D151E111F0	283-0630-00
C4404 [1]	-5-24	308-000C0G0350J	281-0625-00
C4405 [1]	-5-21	281-0205-00	281-0205-00
C4406	-5-34	8131N145 A 332J	283-0051-00
C4408	-5-33	273C20	283-0010-00
C4409	-5-29	390049X5P0820K	281-0792-00
C4410	-5-21	281-0205-00	281-0205-00
C4411 [1]	-5-28	G1710-050NP0471K	281-0823-00
C4412 [1]	-5-22	513-001 5-30	281-0219-00
C4423	-5-28	G1710-050NP0471K	281-0823-00
C4424	-5-26	8005H9AABZ5U104M	281-0775-00
C4425	-5-26	8005H9AABZ5U104M	281-0775-00
C4432	-5-26	8005H9AABZ5U104M	281-0775-00
C4433 [1]	-5-28	G1710-050NP0471K	281-0823-00
C4447 [1]	-5-22	513-001-5-30	281-0219-00
C4457 [1]	-5-36	8131N145 E 104Z	283-0178-00
C4461 [1]	-5-28	G1710-050NP0471K	281-0823-00
C4466	-5-26	8005H9AABZ5U104M	281-0775-00
C4471 [1]	-5-28	G1710-050NP0471K	281-0823-00
C4474	-5-26	8005H9AABZ5U104M	281-0775-00
C4475 [1]	-5-36	8131N145 E 104Z	283-0178-00
DL400	-4-33	119-0860-00	119-0860-00
DS563	-14-6	NE2T-A1AT	150-0002-00
DS564	-14-6	NE2T-A1AT	150-0002-00
DS784	-12-18	2112D	150-0129-00
DS786	-12-18	2112D	150-0129-00
F558	-14-43	AGC 1/4	159-0028-00
F700 [3]	-13-72	AGC 1	159-0022-00
F736	-14-44	AGC 3/10	159-0030-00
F746	-14-42	AGC 2	159-0021-00
F768	-14-42	AGC 2	159-0021-00
J2	-14-164	000-201-4986	131-2063-00
J4	-14-164	000-201-4986	131-2063-00
J358	-14-163	131-1003-00	131-1003-00
J359	-13-52	28JR166-1	131-0352-02
J387	-12-9	450-4352-01-0318	136-0387-00
J388	-12-9	450-4352-01-0318	136-0387-00
J503	-14-163	131-1003-00	131-1003-00
J513	-13-52	28JR166-1	131-0352-02
J2105	-7-30	28JR166-1	131-0352-02
J2205	-7-30	28JR166-1	131-0352-02
J2716	-11-85	131-1003-00	131-1003-00
J2717	-13-52	28JR166-1	131-0352-02
J4100	-4-19	9663-1 NT-34	131-0126-00
J4200	-4-19	9663-1 NT-34	131-0126-00
J4287	-5-132	131-1003-00	131-1003-00
J4289	-13-52	28JR166-1	131-0352-02
LR4466	-5-5	108-0328-00	108-0328-00
LR4476	-5-5	108-0328-00	108-0328-00
L386	-14-1	108-0245-00	108-0245-00
L554	-14-4	108-0820-00	108-0820-00
L558	-14-2	108-0422-00	108-0422-00
L571	-12-31	108-0818-00	108-0818-00

See end of Section for footnotes.

REFERENCE DESIGNATION	FIG. & INDEX NO.	MFR. PART NUMBER	TEKTRONIX PART NUMBER
L573	8-12-34	108-0819-00	108-0919-00
L582	-14-3	70F183A1	108-0691-00
L2635	-11-1	108-0724-00	108-0724-00
L2688	-11-2	57-0180-7D 500B	276-0507-00
L2698	-11-2	57-0180-7D 500B	276-0507-00
L2788	-11-2	57-0180-7D 500B	276-0507-00
L2798	-11-2	57-0180-7D 500B	276-0507-00
L4128	-5-2	57-0180-7D 500B	276-0507-00
L4135	-5-2	57-0180-7D 500B	276-0507-00
L4228	-5-2	57-0180-7D 500B	276-0507-00
L4237	-5-2	57-0180-7D 500B	276-0507-00
L4262	-5-2	57-0180-7D 500B	276-0507-00
L4264	-5-2	57-0180-7D 500B	276-0507-00
L4378	-5-1	108-0262-00	108-0262-00
L4388	-5-1	108-0262-00	108-0262-00
L4401	-5-3	108-0570-00	108-0570-00
L4403	-5-3	108-0570-00	108-0570-00
L4445	-5-4	120-1094-00	120-1094-00
L4455	-5-4	120-1094-00	120-1094-00
P700	-13-44	F-11935-6	119-0420-00
Q232	-14-10	2N3906	151-0188-00
Q234	-14-11	151-0190-00	151-0190-00
Q244	-14-16	151-0347-00	151-0347-00
Q246	-14-17	151-0350-00	151-0350-00
Q274	-14-11	151-0190-00	151-0190-00
Q284	-14-16	151-0347-00	151-0347-00
Q286	-14-17	151-0350-00	151-0350-00
Q356	-14-11	151-0190-00	151-0190-00
Q358	-14-11	151-0190-00	151-0190-00
Q376	-14-15	151-0342-00	151-0342-00
Q382	-14-15	151-0342-00	151-0342-00
Q386	-14-9	151-0164-00	151-0164-00
Q514	-14-12	151-0192-00	151-0192-00
Q518	-14-10	2N3906	151-0188-00
Q524	-14-17	151-0350-00	151-0350-00
Q526	-14-16	151-0347-00	151-0347-00
Q544	-14-7	2N2484	151-0126-00
Q548	-14-10	2N3906	151-0188-00
Q552[1]	-14-20	151-0701-00	151-0701-00
Q556	-14-18	151-0364-00	151-0364-00
Q732	-14-16	151-0347-00	151-0347-00
Q734	-14-16	151-0347-00	151-0347-00
Q736	-13-58	151-0349-00	151-0349-00
Q742	-14-14	2N2222A	151-0302-00
Q744	-14-8	35495	151-0136-00
Q746	-13-58	151-0349-00	151-0349-00
Q764	-14-13	2N2907A	151-0301-00
Q766	-14-13	2N2907A	151-0301-00
Q768	-13-58	151-0349-00	151-0349-00
Q784	-14-19	151-0405-00	151-0405-00
Q2112	-8-4	151-1042-00	151-1042-00
Q2114	-8-4	151-1042-00	151-1042-00
Q2116	-8-2	151-0190-00	151-0190-00

See end of Section for footnotes.

REFERENCE DESIGNATION	FIG. & INDEX NO.	MFR. PART NUMBER	TEKTRONIX PART NUMBER
Q2122	8 -8-3	151-0472-00	151-0472-00
Q2142	-8-3	151-0472-00	151-0472-00
Q2212	-8-4	151-1042-00	151-1042-00
Q2214	-8-4	151-1042-00	151-1042-00
Q2216	-8-2	151-0190-00	151-0190-00
Q2284	-8-1	2N3906	151-0188-00
Q2350	-10-1	2N3906	151-0188-00
Q2356	-10-1	2N3906	151-0188-00
Q2602	-11-3	2N3906	151-0188-00
Q2604	-11-3	2N3906	151-0188-00
Q2618	-11-4	151-0190-00	151-0190-00
Q2620	-11-4	151-0190-00	151-0190-00
Q2622	-11-3	2N3906	151-0188-00
Q2624	-11-4	151-0190-00	151-0190-00
Q2629	-11-4	151-0190-00	151-0190-00
Q2632	-11-3	2N3906	151-0188-00
Q2636	-11-3	2N3906	151-0188-00
Q2672	-11-4	151-0190-00	151-0190-00
Q2674	-11-4	151-0190-00	151-0190-00
Q2682	-11-5	151-1042-00	151-1042-00
Q2684	-11-5	151-1042-00	151-1042-00
Q2686	-11-3	2N3906	151-0188-00
Q2696	-11-3	2N3906	151-0188-00
Q2702	-11-3	2N3906	151-0188-00
Q2704	-11-3	2N3906	151-0188-00
Q2712	-11-4	151-0190-00	151-0190-00
Q2782	-11-5	151-1042-00	151-1042-00
Q2784	-11-5	151-1042-00	151-1042-00
Q2786	-11-3	2N3906	151-0188-00
Q2788	-11-4	151-0190-00	151-0190-00
Q4124	-5-14	151-1090-02	151-1090-02
Q4224	-5-14	151-1090-02	151-1090-02
Q4282	-5-13	151-0472-00	151-0472-00
Q4288	-5-11	S039650	151-0458-00
Q4316	-5-8	151-0190-00	151-0190-00
Q4326	-5-8	151-0190-00	151-0190-00
Q4334	-5-8	2N3947	151-0460-00
Q4338	-5-8	151-0190-00	151-0190-00
Q4342	-5-9	151-0434-00	151-0434-00
Q4352	-5-9	151-0434-00	151-0434-00
Q4362	-5-13	151-0472-00	151-0472-00
Q4372	-5-13	151-0472-00	151-0472-00
Q4384	-5-7	S6075	151-0127-00
Q4421	-5-13	151-0472-00	151-0472-00
Q4429	-5-9	151-0434-00	151-0434-00
Q4431	-5-13	151-0472-00	151-0472-00
Q4439	-5-9	151-0434-00	151-0434-00
Q4447	-5-10	151-0447-00	151-0447-00
Q4457	-5-10	151-0447-00	151-0447-00
Q4463	-4-40	151-0446-00	151-0446-00
Q4473	-4-40	151-0446-00	151-0446-00
RT4416	-5-41	2D1596	307-0127-00
RT4419	-5-42	1DE104-K-220EC	307-0181-00

REFERENCE DESIGNATION	FIG. & INDEX NO.	MFR. PART NUMBER	TEKTRONIX PART NUMBER
R232	8-14-154	CECT0-8871F	323-0284-00
R233	-14-154	CECT0-8871F	323-0284-00
R235	-14-147	MFF1816G47501F	321-0354-00
R236	-14-141	MFF1816G54900F	321-0264-00
R241	-14-115	CB4315	315-0431-00
R243	-14-76	EB2235	301-0223-00
R244	-14-136	MFF1816G909R0F	321-0189-00
R245	-14-124	CB5625	315-0562-00
R246	-14-117	CB4705	315-0470-00
R247	-14-94	CB1015	315-0101-00
R272	-14-154	CECT0-8871F	323-0284-00
R273	-14-154	CECT0-8871F	323-0284-00
R275	-14-105	CB1825	315-0182-00
R276	-14-115	CB4315	315-0431-00
R283	-14-76	EB2235	301-0223-00
R284	-14-136	MFF1816G909R0F	321-0189-00
R285	-14-127	CB6815	315-0681-00
R286	-14-117	CB4705	315-0470-00
R287	-14-94	CB1015	315-0101-00
R288	-14-125	CB5635	315-0563-00
R352	-14-104	CB1535	315-0153-00
R353	-14-119	CB4725	315-0472-00
R354	-14-109	CB2225	315-0222-00
R356	-14-110	CB2725	315-0272-00
R358	-14-121	CB5115	315-0511-00
R372	-14-111	CB2735	315-0273-00
R373	-14-131	CB9125	315-0912-00
R374	-14-104	CB1535	315-0153-00
R375	-14-143	MFF1816G16901F	321-0311-00
R376	-14-96	CB1145	315-0104-00
R377	-14-126	CB6235	315-0623-00
R382	-14-97	CB1145	315-0114-00
R383	-14-106	CB1835	315-0183-00
R386	-14-84	3386F-T04-251	311-1223-00
R387	-14-133	MFF1816G619R0F	321-0173-00
R388	-14-132	MFF1816G187R0F	321-0123-00
R502	-14-95	CB1025	315-0102-00
R503	-14-135	MFF1816G665R0F	321-0176-00
R504	-14-99	CB1225	315-0122-00
R505	-14-81	RS2B-B16000J	308-0393-00
R506	-14-113	CB3905	315-0390-00
R512	-14-145	MFF1816G24901F	321-0327-00
R513	-14-153	CECT0-4871F	323-0259-00
R514[1]	-14-139	MFF1816G39200F	321-0250-00
R515	-14-110	CB2725	315-0272-00
R516[1]	-14-155	CECT0-1782F	323-0313-00
R517	-14-107	CB2015	315-0201-00
R521	-14-122	CB5125	315-0512-00
R522	-14-129	CB8235	315-0823-00
R523	-14-130	CB9115	315-0911-00
R524	-14-76	EB2235	301-0223-00
R525	-14-128	CB8215	315-0821-00
R526	-14-103	CB1515	315-0151-00

See end of Section for footnotes.

REFERENCE DESIGNATION	FIG. & INDEX NO.	MFR. PART NUMBER	TEKTRONIX PART NUMBER
R532	8-14-86	91A-25001M	311-1557-00
R533	-14-95	CB1025	315-0102-00
R541	-14-96	CB1045	315-0104-00
R542	-14-96	CB1045	315-0104-00
R543	-14-120	CB4745	315-0474-00
R544	-14-95	CB1025	315-0102-00
R546	-14-100	CB1235	315-0123-00
R547	-14-101	CB1315	315-0131-00
R548	-14-94	CB1015	315-0101-00
R553	-14-94	CB1015	315-0101-00
R554	-14-98	CB1205	315-0120-00
R556	-14-121	CB5115	315-0511-00
R563A,B,C,D	-14-80	307-0471-00	307-0471-00
R564	-14-93	3859Z-X52-505Z	311-1790-00
R566A/B	-14-92	D388-CM40910	311-1769-00
R571	-14-90	3859Z-X04-202A	311-1726-00
R572	-14-85	91A-2002M	311-1554-00
R573	-14-88	91A-20000M	311-1562-00
R574	-14-126	CB6235	315-0623-00
R575	-14-123	CB5135	315-0513-00
R576	-14-91	3858Z-B78-203A	311-1727-00
R577	-14-118	CB4715	315-0471-00
R721	-14-112	CB3035	315-0303-00
R722	-14-78	GB3025	303-0302-00
R723	-14-142	MFF1816G11801F	321-0296-00
R725	-14-121	CB5115	315-0511-00
R728	-14-79	GB4725	303-0472-00
R731	-14-108	CB2045	315-0204-00
R732	-14-134	MFF1816G634R0F	321-0174-00
R733	-14-146	MFF1816G31601F	321-0337-00
R734	-14-83	BWH-1R800J	308-0703-00
R735	-14-149	MFF1816D40201D	321-0696-00
R736	-14-87	91A-25000M	311-1561-00
R737	-14-148	MFF1816D15001D	321-0684-00
R738	-14-77	GB2425	303-0242-00
R740	-14-110	CB2725	315-0272-00
R741	-14-152	MFF1816D27001C	321-1656-03
R742	-14-150	MFF1816D50000C	321-0816-03
R743	-14-116	CB4325	315-0432-00
R745	-14-104	CB1535	315-0153-00
R746	-14-137	MFF1816G11300F	321-0198-00
R747	-14-140	MFF1816G52300F	321-0262-00
R748	-14-82	BWH-R5100J	308-0679-00
R761	-14-110	CB2725	315-0272-00
R762	-14-150	MFF1816D50000C	321-0816-03
R763	-14-151	MFF1816D32001C	321-1655-03
R764	-14-116	CB4325	315-0432-00
R765	-14-144	MFF1816G21001F	321-0320-00
R766	-14-138	MFF1816G30100F	321-0239-00
R767	-14-94	CB1015	315-0101-00
R768	-14-82	BWH-R5100J	308-0679-00
R769	-14-114	CB3915	315-0391-00
R772	-14-111	CB2735	315-0273-00

REFERENCE DESIGNATION	FIG. & INDEX NO.	MFR. PART NUMBER	TEKTRONIX PART NUMBER
R773	8-14-95	CB1025	315-0102-00
R776	-14-102	CB1325	315-0132-00
R777	-14-95	CB1025	315-0102-00
R782	-14-110	CB2725	315-0272-00
R785	-14-89	3859Z-X05-103F	311-1725-00
R2101	-7-22	CB2705	315-0270-00
R2103	-8-43	CB3355	315-0335-00
R2104	-8-54	CB9135	315-0913-00
R2105	-8-29	CB1055	315-0105-00
R2106	-8-48	CB5145	315-0514-00
R2112	-8-29	CB1055	315-0105-00
R2113	-8-31	CB7505	315-0750-00
R2115	-8-27	CB1025	315-0102-00
R2116	-8-56	MFF1816G15000F	321-0210-00
R2118	-8-46	CB4705	315-0470-00
R2119	-8-46	CB4705	315-0470-00
R2121	-8-53	CB7505	315-0750-00
R2124	-8-46	CB4705	315-0470-00
R2125	-8-40	CB2715	315-0271-00
R2126	-8-51	CB6215	315-0621-00
R2127	-8-37	CB1005	315-0100-00
R2128	-8-56	MFF1816G15000F	321-0210-00
R2130	-8-55	MFF1816G26700F	321-0234-00
R2131	-8-55	MFF1816G26700F	321-0234-00
R2132	-8-55	MFF1816G26700F	321-0234-00
R2133	-8-55	MFF1816G26700F	321-0234-00
R2135	-8-47	CB4735	315-0473-00
R2136	-8-47	CB4735	315-0473-00
R2137	-8-47	CB4735	315-0473-00
R2138	-8-47	CB4735	315-0473-00
R2141	-8-53	CB7505	315-0750-00
R2144	-8-46	CB4705	315-0470-00
R2145	-8-40	CB2715	315-0271-00
R2146	-8-51	CB6215	315-0621-00
R2147	-8-37	CB1005	315-0100-00
R2148	-8-56	MFF1816G15000F	321-0210-00
R2151	-8-53	CB7505	315-0750-00
R2153	-8-24	3858Z-X03-203E	311-1724-00
R2158	-8-56	MFF1816G15000F	321-0210-00
R2164	-8-30	CB1325	315-0132-00
R2165	-8-49	CB5615	315-0561-00
R2167	-8-41	CB3025	315-0302-00
R2168	-8-28	CB1035	315-0103-00
R2170	-8-56	MFF1816G15000F	321-0210-00
R2171	-8-44	CB3625	315-0362-00
R2172	-8-55	MFF1816G26700F	321-0234-00
R2173	-8-50	CB6205	315-0620-00
R2174	-8-38	CB2225	315-0222-00
R2175	-8-54.1	BB1015	317-0101-00
R2179	-8-38	CB2225	315-0222-00
R2183	-8-23	91A-50000M	311-1560-00
R2185	-8-23	91A-50000M	311-1560-00
R2186	-8-30	CB1325	315-0132-00

REFERENCE DESIGNATION	FIG. & INDEX NO.	MFR. PART NUMBER	TEKTRONIX PART NUMBER
R2189	8 -8-38	CB2225	315-0222-00
R2190	-8-55	MFF1816G26700F	321-0234-00
R2191	-8-47	CB4735	315-0473-00
R2198	-8-22	CB51G5	307-0113-00
R2199	-8-25	CB1005	315-0100-00
R2201	-7-22	CB2705	315-0270-00
R2203	-10-26	CB3355	315-0335-00
R2204	-10-33	CB9135	315-0913-00
R2205	-10-21	CB1055	315-0105-00
R2206	-10-29	CB5145	315-0514-00
R2212	-8-29	CB1055	315-0105-00
R2213	-8-31	CB7505	315-0750-00
R2215	-8-27	CB1025	315-0102-00
R2216 [1]	-8-45	CB3905	315-0390-00
R2218	-8-46	CB4705	315-0470-00
R2221	-8-56	MFF1816G15000F	321-0210-00
R2222	-8-56	MFF1816G15000F	321-0210-00
R2223	-8-56	MFF1816G15000F	321-0210-00
R2224	-8-56	MFF1816G15000F	321-0210-00
R2225	-8-33	CB1535	315-0153-00
R2228	-8-28	CB1035	315-0103-00
R2229	-8-46	CB4705	315-0470-00
R2230	-8-55	MFF1816G26700F	321-0234-00
R2231	-8-55	MFF1816G26700F	321-0234-00
R2232	-8-55	MFF1816G26700F	321-0234-00
R2233	-8-55	MFF1816G26700F	321-0234-00
R2235	-8-47	CB4735	315-0473-00
R2236	-8-47	CB4735	315-0473-00
R2237	-8-47	CB4735	315-0473-00
R2238	-8-47	CB4735	315-0473-00
R2242	-8-47	CB4735	315-0473-00
R2243	-8-55	MFF1816G26700F	321-0234-00
R2245	-8-23	91A-50000M	311-1560-00
R2246	-8-30	CB1325	315-0132-00
R2249	-8-23	91A-50000M	311-1560-00
R2252	-8-30	CB1325	315-0132-00
R2253	-8-24	3858Z-X03-203E	311-1724-00
R2254	-8-49	CB5615	315-0561-00
R2255	-8-41	CB3025	315-0302-00
R2256	-8-56	MFF1816G15000F	321-0210-00
R2257	-8-44	CB3625	315-0362-00
R2258	-8-55	MFF1816G26700F	321-0234-00
R2259	-8-54.1	BB1015	317-0101-00
R2261	-8-35	CB2025	315-0202-00
R2262	-8-35	CB2025	315-0202-00
R2263	-8-54.1	BB1015	317-0101-00
R2264	-8-42	CB3335	315-0333-00
R2265	-8-39	CB2235	315-0223-00
R2266	-8-54.1	BB1015	317-0101-00
R2271	-8-38	CB2225	315-0222-00
R2272	-8-38	CB2225	315-0222-00
R2273	-8-50	CB6205	315-0620-00
R2275	-8-32	CB1525	315-0152-00

See end of Section for footnotes.

REFERENCE DESIGNATION	FIG. & INDEX NO.	MFR. PART NUMBER	TEKTRONIX PART NUMBER
R2278	8 -8-22	CB51G5	307-0113-00
R2279	-8-25	CB1005	315-0100-00
R2280	-8-52	CB6815	315-0681-00
R2281	-8-47	CB4735	315-0473-00
R2283	-8-47	CB4735	315-0473-00
R2284	-8-34	CB1545	315-0154-00
R2286	-8-36	CB2045	315-0204-00
R2287	-8-38	CB2225	315-0222-00
R2288	-8-38	CB2225	315-0222-00
R2289	-8-26	CB1015	315-0101-00
R2299	-8-27	CB1025	315-0102-00
R2352	-10-24	CB1005	315-0100-00
R2354	-10-28	CB6815	315-0681-00
R2356	-10-24	CB1005	315-0100-00
R2358	-10-28	CB6815	315-0681-00
R2603	-11-75	CB9105	315-0910-00
R2605	-11-39	CB1225	315-0122-00
R2610	-11-33	CB1025	315-0102-00
R2612	-11-44	CB1825	315-0182-00
R2613	-10-25	CB2235	315-0223-00
R2614	-10-25	CB2235	315-0223-00
R2615	-10-17	91A-10001M	311-1559-00
R2616	-11-63	CB4735	315-0473-00
R2617	-11-63	CB4735	315-0473-00
R2618	-11-34	CB1035	315-0103-00
R2620	-11-61	CB4715	315-0471-00
R2622	-11-51	CB2235	315-0223-00
R2623	-11-62	CB4725	315-0472-00
R2625	-11-73	CB8215	315-0821-00
R2626	-11-36	CB1125	315-0112-00
R2627	-11-47	CB2015	315-0201-00
R2630	-11-38	CB1215	315-0121-00
R2632	-11-69	CB6225	315-0622-00
R2633	-11-55	CB3305	315-0330-00
R2634	-11-59	CB3915	315-0391-00
R2635	-11-46	CB2005	315-0200-00
R2636	-11-69	CB6225	315-0622-00
R2637	-11-55	CB3305	315-0330-00
R2638	-11-53	CB3015	315-0301-00
R2640	-11-78	MFF1816G33200F	321-0243-00
R2641	-11-76	MFF1816G22100F	321-0226-00
R2652	-11-77	MFF1816G23700F	321-0229-00
R2653	-11-34	CB1035	315-0103-00
R2654	-11-62	CB4725	315-0472-00
R2655	-11-50	CB2225	315-0222-00
R2656	-11-49	CB2215	315-0221-00
R2657	-11-74	CB8225	315-0822-00
R2661	-11-41	CB1325	315-0132-00
R2662	-11-58	CB3625	315-0362-00
R2671	-11-52	CB2725	315-0272-00
R2673	-11-44	CB1825	315-0182-00
R2675	-11-62	CB4725	315-0472-00
R2678	-11-70	CB6815	315-0681-00

REFERENCE DESIGNATION	FIG. & INDEX NO.	MFR. PART NUMBER	TEKTRONIX PART NUMBER
R2682	8-11-30	91A-10001M	311-1559-00
R2683	-11-63	CB4735	315-0473-00
R2684	-11-54	CB3035	315-0303-00
R2685	-11-48	CB2035	315-0203-00
R2686	-11-52	CB2725	315-0272-00
R2687	-11-40	CB1235	315-0123-00
R2691	-11-63	CB4735	315-0473-00
R2692	-11-57	CB3325	315-0332-00
R2693	-11-34	CB1035	315-0103-00
R2694	-11-62	CB4725	315-0472-00
R2695	-11-34	CB1035	315-0103-00
R2696	-11-57	CB3325	315-0332-00
R2697	-11-32	CB1015	315-0101-00
R2699	-11-49	CB2215	315-0221-00
R2701	-11-54	CB3035	315-0303-00
R2703	-11-75	CB9105	315-0910-00
R2705	-11-33	CB1025	315-0102-00
R2708	-11-50	CB2225	315-0222-00
R2710	-11-62	CB4725	315-0472-00
R2711	-11-33	CB1025	315-0102-00
R2712	-11-29	CB47G5	307-0106-00
R2713	-10-25	CB2235	315-0223-00
R2714	-10-25	CB2235	315-0223-00
R2715	-10-17	91A-10001M	311-1559-00
R2716	-11-61	CB4715	315-0471-00
R2718	-11-59	CB3915	315-0391-00
R2719	-11-29	CB47G5	307-0106-00
R2741	-11-71	CB6845	315-0684-00
R2742	-11-45	CB1835	315-0183-00
R2743	-11-42	CB1525	315-0152-00
R2744	-11-81	MFF1816G84501F	321-0378-00
R2745	-11-80	MFF1816G56200F	321-0265-00
R2746	-11-62	CB4725	315-0472-00
R2747	-11-79	MFF1816G45300F	321-0256-00
R2748	-11-31	91A-25000M	311-1561-00
R2749	-7-2	3540S-561-103	311-1729-00
R2751	-11-62	CB4725	315-0472-00
R2752	-11-64	CB4745	315-0474-00
R2753	-11-35	CB1045	315-0104-00
R2755	-11-70	CB6815	315-0681-00
R2757	-11-68	CB5645	315-0564-00
R2759	-11-39	CB1225	315-0122-00
R2762	-11-72	CB7525	315-0752-00
R2763	-11-57	CB3325	315-0332-00
R2764	-11-57	CB3325	315-0332-00
R2765	-11-57	CB3325	315-0332-00
R2766	-11-57	CB3325	315-0332-00
R2767	-11-57	CB3325	315-0332-00
R2774	-11-57	CB3325	315-0332-00
R2776	-11-67	CB5635	315-0563-00
R2777	-10-20	381-CM40943	311-1728-00
R2780	-11-60	CB4705	315-0470-00
R2781	-11-32	CB1015	315-0101-00

REFERENCE DESIGNATION	FIG. & INDEX NO.	MFR. PART NUMBER	TEKTRONIX PART NUMBER
R2782	8-11-30	91A-10001M	311-1559-00
R2783	-11-63	CB4735	315-0473-00
R2784	-11-54	CB3035	315-0303-00
R2785	-11-48	CB2035	315-0203-00
R2786	-11-52	CB2725	315-0272-00
R2787	-11-40	CB1235	315-0123-00
R2788	-11-33	CB1025	315-0102-00
R2789	-11-37	CB1135	315-0113-00
R2790	-11-74	CB8225	315-0822-00
R2791	-11-61	CB4715	315-0471-00
R2792	-11-57	CB3325	315-0332-00
R2793	-11-34	CB1035	315-0103-00
R2794	-11-65	CB4755	315-0475-00
R2795	-11-43	CB1535	315-0153-00
R2796	-11-63	CB4735	315-0473-00
R2797	-11-32	CB1015	315-0101-00
R2798	-11-66	CB5605	315-0560-00
R2910	-10-30	CB7525	315-0752-00
R2911	-10-13	CB47G5	307-0106-00
R2912	-10-22	CB1125	315-0112-00
R2913A/B	-10-19	381-CM40951	311-1722-00
R2914	-10-32	CB9115	315-0911-00
R2916	-10-15	3386F-T04-50L	311-1224-00
R2917	-10-31	CB8205	315-0820-00
R2919	-10-13	CB47G5	307-0106-00
R2920	-11-70	CB6815	315-0681-00
R2922	-10-35	MFF1816G16900F	321-0215-00
R2923	-10-16	3386F-T04-102	311-1225-00
R2925	-10-14	3386F-T04-101	311-1222-00
R2927	-10-34	MFF1816G130R0F	321-0108-00
R2932	-10-18	91A-50000M	311-1560-00
R2933	-10-36	MFF1816G11501F	321-0295-00
R2934	-10-36	MFF1816G11501F	321-0295-00
R2936	-10-23	CB1835	315-0183-00
R2937	-10-23	CB1835	315-0183-00
R2942	-10-37	MFF1816G26101F	321-0329-00
R2943	-10-27	CB4705	315-0470-00
R2944	-10-27	CB4705	315-0470-00
R3113	-9-11	MFF1816D75001B	321-0373-04
R3114	-9-13	MFF1816D37501B	321-1651-04
R3115	-9-13	MFF1816D37501B	321-1651-04
R3122	-9-7	CB3915	315-0391-00
R3123	-9-15	HMF188D22503B	321-1653-04
R3124	-9-12	MFF1816D75002B	321-0469-04
R3125	-9-14	MFF1816D37502B	321-1652-04
R3127	-9-14	MFF1816D37502B	321-1652-04
R3128/S3128	-7-52	381CM40935	311-1793-00
R3129	-11-56	CB3315	315-0331-00
R3132	-9-4	CB1335	315-0133-00
R3133	-9-10	CB9135	315-0913-00
R3134	-9-5	CB2235	315-0223-00
R3135	-9-6	CB2245	315-0224-00
R3136	-9-8	CB3935	315-0393-00

REFERENCE DESIGNATION	FIG. & INDEX NO.	MFR. PART NUMBER	TEKTRONIX PART NUMBER
R3137	8 -9-9	CB2255	315-0225-00
R3222	-9-23	MFF1816D37502B	321-1652-04
R3223	-9-23	MFF1816D37502B	321-1652-04
R3224	-9-21	MFF1816D75002B	321-0469-04
R3225	-9-24	HMF188D22503B	321-1653-04
R3238	-9-20	MFF1816D75001B	321-0373-04
R3236	-9-22	MFF1816D37501B	321-1651-04
R3237	-9-22	MFF1816D37501B	321-1651-04
R3242	-9-19	CB3915	315-0391-00
R4101	-4-17	CB5105	315-0510-00
R4102	-6-11	BB1055	317-0105-00
R4103	-6-10	CB5105	315-0510-00
R4105	-4-72	CB3305	315-0330-00
R4106	-4-68	91A-100R0M	311-1567-00
R4108	-4-72.1	3329P-L58-101	311-1259-00
R4109	-4-71	CB6815	315-0681-00
R4122	-5-119	MFF1816G10003F	321-0481-00
R4123	-5-77	CB4745	315-0474-00
R4125	-5-52	CB1005	315-0100-00
R4126	-5-62	CB2005	315-0200-00
R4127	-5-62	CB2005	315-0200-00
R4129	-5-90.1	BB4705	317-0470-00
R4134	-5-48	91A-10001M	311-1559-00
R4135	-5-55	CB1035	315-0103-00
R4136	-5-60	CB1515	315-0151-00
R4142	-5-68	CB3015	315-0301-00
R4143/S4143	-4-96	381CM40934	311-1791-00
R4144	-5-70	CB3325	315-0332-00
R4145	-5-64	CB2025	315-0202-00
R4153	-4-91	388-CM40915	311-1783-00
R4154	-5-61	CB1625	315-0162-00
R4156	-5-53	CB1015	315-0101-00
R4159	-5-87	BB1005	317-0100-00
R4160	-6-13	MFF1816G200R0D	321-0126-01
R4161	-6-12	MFF1816G150R0D	321-0114-01
R4162	-6-9	CB1315	315-0131-00
R4163	-5-120	MFF1816D400R0C	321-0773-03
R4164	-6-15	MFF1816G800R0D	321-1709-01
R4165	-6-13	MFF1816G200R0D	321-0126-01
R4166	-6-12	MFF1816G150R0D	321-0114-01
R4167	-6-8	91A-200R0M	311-1566-00
R4168	-6-14	MFF1816G133R3D	321-1708-01
R4171	-5-91	BB4715	317-0471-00
R4173	-5-50	91A-250R0M	311-1565-00
R4174	-5-51	91A-100R0M	311-1567-00
R4175	-5-92	BB8225	317-0822-00
R4176	-5-82	CB4705	315-0470-00
R4177	-5-65	CB2405	315-0240-00
R4192	-5-52	CB1005	315-0100-00
R4201	-4-17	CB5105	315-0510-00
R4202	-6-27	BB1055	317-0105-00
R4203	-6-26	CB5105	315-0510-00
R4205	-4-72	CB3305	315-0330-00

REFERENCE DESIGNATION	FIG. & INDEX NO.	MFR. PART NUMBER	TEKTRONIX PART NUMBER
R4206	8 -4-68	91A-100R0M	311-1567-00
R4208	-4-72.1	3329P-L58-101	311-1259-00
R4209	-4-71	CB6815	315-0681-00
R4222	-5-119	MFF1816G10003F	321-0481-00
R4223	-5-77	CB4745	315-0474-00
R4225	-5-52	CB1005	315-0100-00
R4226	-5-62	CB2005	315-0200-00
R4227	-5-62	CB2005	315-0200-00
R4229	-5-90.1	BB4705	317-0470-00
R4234	-5-48	91A-10001M	311-1559-00
R4235	-5-55	CB1035	315-0103-00
R4236	-5-60	CB1515	315-0151-00
R4242	-5-68	CB3015	315-0301-00
R4243/S4243	-4-96	381CM40934	311-1791-00
R4244	-5-89	BB1225	317-0122-00
R4245	-5-89	BB1225	317-0122-00
R4246	-5-90	BB2025	317-0202-00
R4247	-5-90	BB2025	317-0202-00
R4253	-4-91	388-CM40915	311-1783-00
R4254[1]	-5-61	CB1625	315-0162-00
R4256	-5-53	CB1015	315-0101-00
R4259[1]	-6-27.1	BB2215	317-0221-00
R4260	-6-30	MFF1816G200R0D	321-0126-01
R4261	-6-29	MFF186G150R0D	321-0114-01
R4262	-6-25	CB2715	315-0271-00
R4263	-5-120	MFF1816D400R0C	321-0773-00
R4264	-6-32	MFF1816G800R0D	321-1709-01
R4265	-6-30	MFF1816G200R0D	321-0126-01
R4266	-6-29	MFF1816G150R0D	321-0114-01
R4267	-6-24	91A-200R0M	311-1566-00
R4268	-6-31	MFF1816G133R3D	321-1708-01
R4269	-6-28	BB3005	317-0300-00
R4271	-5-53	CB1015	315-0101-00
R4272	-5-49	91A-R2500	311-1561-00
R4275	-5-81	CB5625	315-0562-00
R4276	-5-82	CB4705	315-0470-00
R4280	-5-66	CB2015	315-0201-00
R4281	-5-65	CB2405	315-0240-00
R4282	-5-56	CB1215	315-0121-00
R4283	-5-74	CB4315	315-0431-00
R4284	-5-73	CB4305	315-0430-00
R4285	-5-74	CB4315	315-0431-00
R4286	-5-56	CB1215	315-0121-00
R4287	-5-56	CB1215	315-0121-00
R4288	-5-85	CB6215	315-0621-00
R4289	-5-71	CB3615	315-0361-00
R4290	-5-80	CB5605	315-0560-00
R4291	-5-76	CB4715	315-0471-00
R4292	-5-52	CB1005	315-0100-00
R4312	-5-113	MFF1816G332R0F	321-0147-00
R4313	-5-114	MFF1816G392R0F	321-0154-00
R4314	-5-110	MFF1816G287R0F	321-0141-00
R4317	-5-115	MFF1816G412R0F	321-0156-00

See end of Section for footnotes.

REFERENCE DESIGNATION	FIG. & INDEX NO.	MFR. PART NUMBER	TEKTRONIX PART NUMBER
R4318	8 -5-111	MFF1816G294R0F	321-0142-00
R4322	-5-113	MFF1816G332R0F	321-0147-00
R4323	-5-114	MFF1816G392R0F	321-0154-00
R4324	-5-110	MFF1816G287R0F	321-0141-00
R4327	-5-115	MFF1816G412R0F	321-0156-00
R4328	-5-111	MFF1816G294R0F	321-0142-00
R4332	-5-63	CB2015	315-0201-00
R4333	-5-40	CB47G5	307-0106-00
R4334	-5-67	CB2235	315-0223-00
R4335	-5-84	CB6235	315-0623-00
R4336	-5-57	CB1315	315-0131-00
R4337	-5-54	CB1025	315-0102-00
R4338	-5-85	CB6815	315-0681-00
R4340	-5-96	MFF1816G38R30F	321-0057-00
R4341	-5-103	MFF1816G80RG0F	321-0088-00
R4343	-5-87	BB1005	317-0100-00
R4345	-5-99	MFF1816G49R90F	321-0068-00
R4349 [1]	-5-66	CB2415	315-0241-00
R4351	-5-103	MFF1816G80R60F	321-0088-00
R4355	-5-99	MFF1816G49R90F	321-0068-00
R4356	-5-99	MFF1816G49R90F	321-0068-00
R4359 [1]	-5-66	CB2415	315-0241-00
R4361	-5-106	MFF1816G133R0F	321-0109-00
R4362	-5-112	MFF1816G324R0F	321-0146-00
R4363	-5-73	CB4305	315-0430-00
R4364	-5-109	MFF1816G174R0F	321-0120-00
R4365	-5-100	MFF1816G60R40F	321-0076-00
R4366	-5-117	MFF1816G11000F	321-0197-00
R4371	-5-106	MFF1816G133R0F	321-0109-00
R4372	-5-112	MFF1816G324R0F	321-0146-00
R4373	-5-73	CB4305	315-0430-00
R4375	-5-100	MFF1816G60R40F	321-0076-00
R4376	-5-98	MFF1816G41R20F	321-0060-00
R4382	-5-107	MFF1816G150R0F	321-0114-00
R4383	-5-53	CB1015	315-0101-00
R4384	-5-75	CB4705	315-0470-00
R4385	-5-83	CB6215	315-0621-00
R4386	-5-60	CB1515	315-0151-00
R4400	-5-75	CB4705	315-0470-00
R4401	-5-102	MFF1816G75R00F	321-0085-00
R4403	-5-102	MFF1816G75R00F	321-0085-00
R4404	-5-58	CB1325	315-0132-00
R4405 [1]	-5-78	CB5115	315-0511-00
R4406	-5-47	91A-20001M	311-1558-00
R4408	-5-59	CB1335	315-0133-00
R4409	-5-64	CB2025	315-0202-00
R4410	-5-45	3329P-L58-101	311-1259-00
R4411	-5-79	CB5152	315-0512-00
R4413	-5-104	MFF1816G93R10F	321-0094-00
R4414	-5-93	MFF1816G10R20F	321-0002-00
R4416	-5-108	MFF1816G162R0F	321-0117-00
R4418	-5-72	CB3625	315-0362-00
R4419	-5-118	MFF1816G35702F	321-0438-00

See end of Section for footnotes.

REFERENCE DESIGNATION	FIG. & INDEX NO.	MFR. PART NUMBER	TEKTRONIX PART NUMBER
R4421	8 -5-110	MFF1816G287R0F	321-0141-00
R4423	-5-86	CB8205	315-0820-00
R4425	-5-69	CB3305	315-0330-00
R4427	-5-101	MFF1816G66R50F	321-0080-00
R4428	-5-116	MFF1816G511R0F	321-0165-00
R4429	-5-114	MFF1816G392R0F	321-0154-00
R4431	-5-110	MFF1816G287R0F	321-0141-00
R4433	-5-86	CB8205	315-0820-00
R4437	-5-101	MFF1816G66R50F	321-0080-00
R4441	-5-88	BB1215	317-0121-00
R4443	-5-46	3329P-L58-252	311-1266-00
R4446	-5-105	MFF1816G110R0F	321-0101-00
R4447	-5-44	3329P-L58-500	311-1258-00
R4448	-5-95	MFF1816G30R10F	321-0047-00
R4451	-5-88	BB1215	317-0121-00
R4453	-5-74	CB4315	315-0431-00
R4456	-5-105	MFF1816G110R0F	321-0101-00
R4457	-5-97	MFF1816G39R20F	321-0058-00
R4458	-5-95	MFF1816G30R10F	321-0047-00
R4459	-5-94	MFF1816G12R70F	321-0011-00
R4461	-5-80	CB5605	315-0560-00
R4463	-5-62	CB2005	315-0200-00
R4466	-5-43	NS2BB430R0F	308-0796-00
R4471	-5-80	CB5605	315-0560-00
R4473	-5-62	CB2005	315-0200-00
R4474	-6-63	CB2015	315-0201-00
R4475	-5-68	CB3015	315-0301-00
R4476	-5-43	NS2BB430R0F	308-0796-00
S500	-14-45	7101-J61-CB22	260-1686-00
S700	-13-3	2DM301	260-1222-00
S701	-13-68	260-1780-00	260-1780-00
S702	-13-15	20704-L67-322	260-0724-01
S2100	-8-9	214-2292-00	214-2292-00
S2120	-8-10	214-2294-02	214-2294-02
S2170	-8-11	260-1211-00	260-1211-00
S2200	-8-9	214-2292-04	214-2292-04
S2220	-8-10	214-2294-02	214-2294-02
S2650	-11-10	260-1802-00	260-1802-00
S2700	-10-4	2KA13010000	260-1771-00
S2750	-11-11	260-1720-00	260-1720-00
S2920	-10-3	260-1453-00	260-1453-00
S3100	-7-46	263-1110-00	263-1110-00
S3200	-7-46	263-1110-00	263-1110-00
S4100A	-4-80	105-0737-00	105-0737-00
S4100B	-4-85	105-0738-00	105-0738-00
S4200A	-4-80	105-0737-00	105-0737-00
S4200B	-4-85	105-0738-00	105-0738-00
S4240	-5-20	260-1445-01	260-1445-01
S4330	-5-19	260-1424-01	260-1424-01
S4378	-5-123	105-0423-00	105-0423-00
S4380	-5-120	105-0421-00	105-0421-00
T550	-14-5	120-0984-00	120-0984-00
T700	-13-75	120-1095-00	120-1095-00

REFERENCE DESIGNATION	FIG. & INDEX NO.	MFR. PART NUMBER	TEKTRONIX PART NUMBER
T4335	8 -5-6	120-0384-00	120-0384-00
U550	-14-38	152-0635-00	152-0635-00
U722	-14-41	156-0158-00	156-0158-00
U762	-14-40	156-0067-00	156-0067-00
U2160	-8-7	155-0151-00	155-0151-00
U2260	-8-7	155-0151-00	155-0151-00
U2280	-8-8	156-0067-00	156-0067-00
U2690	-11-8	155-0123-00	155-0123-00
U2740	-11-9	156-0158-00	156-0158-00
U2750	-11-7	155-0122-00	155-0122-00
U2790	-11-8	155-0123-00	155-0123-00
U2900	-10-2	155-0124-00	155-0124-00
U4160	-5-18	155-0155-00	155-0155-00
VR288	-14-28	1N965B	152-0243-00
VR353	-14-25	152-0195-00	152-0195-00
VR524	-14-25	IN965B	152-0243-00
VR533	-14-32	1N983B	152-0357-00
VR552	-14-30	1N991B	152-0289-00
VR553	-14-37.1	1N968B	152-0304-00
VR560	-12-15	154-0777-00	154-0777-00
VR566	-14-29	1N989B	152-0247-00
VR722	-14-34	1N937	152-0411-00
VR725	-14-26	1N970B	152-0265-00
VR736	-14-27	1N3034B	152-0229-00
VR738	-14-28	1N965B	152-0243-00
VR749	-14-31	1N3828A	152-0309-00
VR769	-14-31	1N3828A	152-0309-00
VR782	-14-39	1N957B	152-0647-00
VR3128	-9-1	152-0217-00	152-0217-00
W744	-14-160	131-0566-00	131-0566-00

[1] See Section VIII for history information.
[2] Added when required.
[3] See Section VIII for value for 232V operation.

SECTION XI
DIFFERENCE DATA SHEETS

11-1 INTRODUCTION. This section of the manual is provided as an area for inserting information about different instrument models, custom modifications, or other accessory information not provided in manuals (such as rack mounting kit instructions, or data sheets on other probes, etc.). Use Table 11-1 to record the items inserted in this section.

Table 11-1. Index of Difference Data Sheets

Title	Identifying number or nomenclature, if applicable

For Service Manuals Contact
MAURITRON TECHNICAL SERVICES
8 Cherry Tree Rd, Chinnor
Oxon OX9 4QY
Tel:- 01844-351694 Fax:- 01844-352554
Email:- enquiries@mauritron.co.uk

MANUAL CHANGE INFORMATION

At Tektronix, we continually strive to keep up with latest electronic developments by adding circuit and component improvements to our instruments as soon as they are developed and tested.

Sometimes, due to printing and shipping requirements, we can't get these changes immediately into printed manuals. Hence, your manual may contain new change information on following pages.

A single change may affect several sections. Since the change information sheets are carried in the manual until all changes are permanently entered, some duplication may occur. If no such change pages appear following this page, your manual is correct as printed.

SERVICE NOTE

Because of the universal parts procurement problem, some electrical parts in your instrument may be different from those described in the Replaceable Electrical Parts List. The parts used will in no way alter or compromise the performance or reliability of this instrument. They are installed when necessary to ensure prompt delivery to the customer. Order replacement parts from the Replaceable Electrical Parts List.

CALIBRATION TEST EQUIPMENT REPLACEMENT

Calibration Test Equipment Chart

This chart compares TM 500 product performance to that of older Tektronix equipment. Only those characteristics where significant specification differences occur, are listed. In some cases the new instrument may not be a total functional replacement. Additional support instrumentation may be needed or a change in calibration procedure may be necessary.

Comparison of Main Characteristics

DM 501 replaces 7D13		
PG 501 replaces 107	PG 501 - Risetime less than 3.5 ns into 50 Ω.	107 - Risetime less than 3.0 ns into 50 Ω.
108	PG 501 - 5 V output pulse; 3.5 ns Risetime	108 - 10 V output pulse 1 ns Risetime
PG 502 replaces 107		
108	PG 502 - 5 V output	108 - 10 V output
111	PG 502 - Risetime less than 1 ns; 10 ns Pretrigger pulse delay	111 - Risetime 0.5 ns; 30 to 250 ns Pretrigger pulse delay
PG 508 replaces 114	Performance of replacement equipment is the same or better than equipment being replaced.	
115		
2101		
PG 506 replaces 106	PG 506 - Positive-going trigger output signal at least 1 V; High Amplitude output, 60 V.	106 - Positive and Negative-going trigger output signal, 50 ns and 1 V; High Amplitude output, 100 V.
067-0502-01	PG 506 - Does not have chopped feature.	0502-01 - Comparator output can be alternately chopped to a reference voltage.
SG 503 replaces 190, 190A, 190B	SG 503 - Amplitude range 5 mV to 5.5 V p-p.	190B - Amplitude range 40 mV to 10 V p-p.
191		
067-0532-01	SG 503 - Frequency range 250 kHz to 250 MHz.	0532-01 - Frequency range 65 MHz to 500 MHz.
SG 504 replaces 067-0532-01	SG 504 - Frequency range 245 MHz to 1050 MHz.	0532-01 - Frequency range 65 MHz to 500 MHz.
067-0650-00		
TG 501 replaces 180, 180A	TG 501 - Trigger output-slaved to marker output from 5 sec through 100 ns. One time-mark can be generated at a time.	180A - Trigger pulses 1, 10, 100 Hz; 1, 10, and 100 kHz. Multiple time-marks can be generated simultaneously.
181		181 - Multiple time-marks
184	TG 501 - Trigger output-slaved to market output from 5 sec through 100 ns. One time-mark can be generated at a time.	184 - Separate trigger pulses of 1 and 0.1 sec; 10, 1, and 0.1 ms; 10 and 1 μs.
2901	TG 501 - Trigger output-slaved to marker output from 5 sec through 100 ns. One time-mark can be generated at a time.	2901 - Separate trigger pulses, from 5 sec to 0.1 μs. Multiple time-marks can be generated simultaneously.

NOTE: All TM 500 generator outputs are short-proof. All TM 500 plug-in instruments require TM 500-Series Power Module.