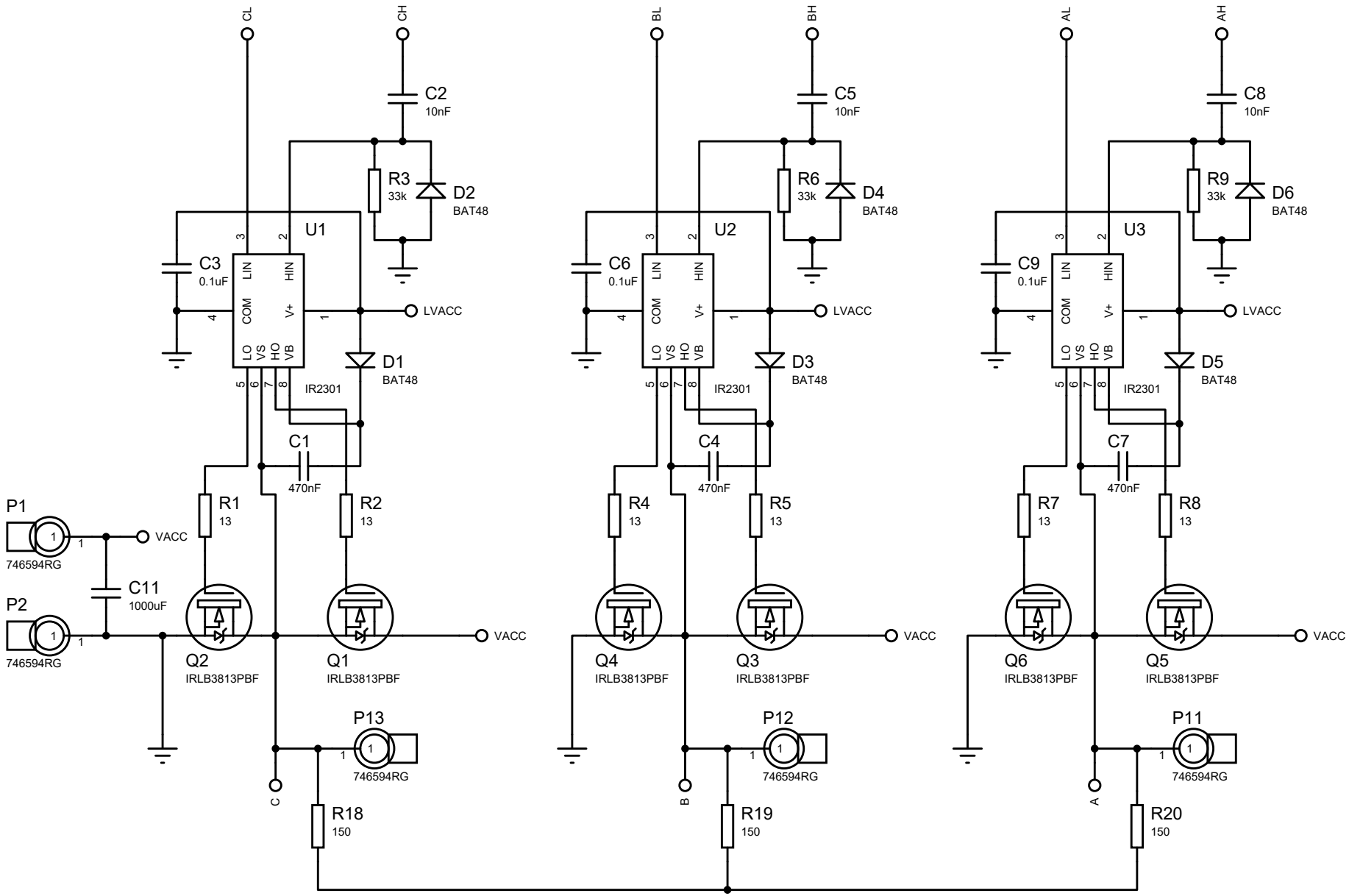
CL
CH
BL
BH
AL
AH
C2
10nF
C5
10nF
C8
10nF
R3
33k
D2
BAT48
R6
33k
D4
BAT48
R9
33k
D6
BAT48
U1
U2
U3
C3
0.1uF
C6
0.1uF
C9
0.1uF
LIN
HIN
COM
V+
LO
VS
HO
VB
LVACC
D1
BAT48
D3
BAT48
D5
BAT48
IR2301
C1
470nF
C4
470nF
C7
470nF
R1
13
R2
13
R4
13
R5
13
R7
13
R8
13
P1
746594RG
VACC
C11
1000uF
P2
746594RG
Q2
IRLB3813PBF
Q1
IRLB3813PBF
Q4
IRLB3813PBF
Q3
IRLB3813PBF
Q6
IRLB3813PBF
Q5
IRLB3813PBF
P13
P12
P11
C
B
A
R18
150
R19
150
R20
150

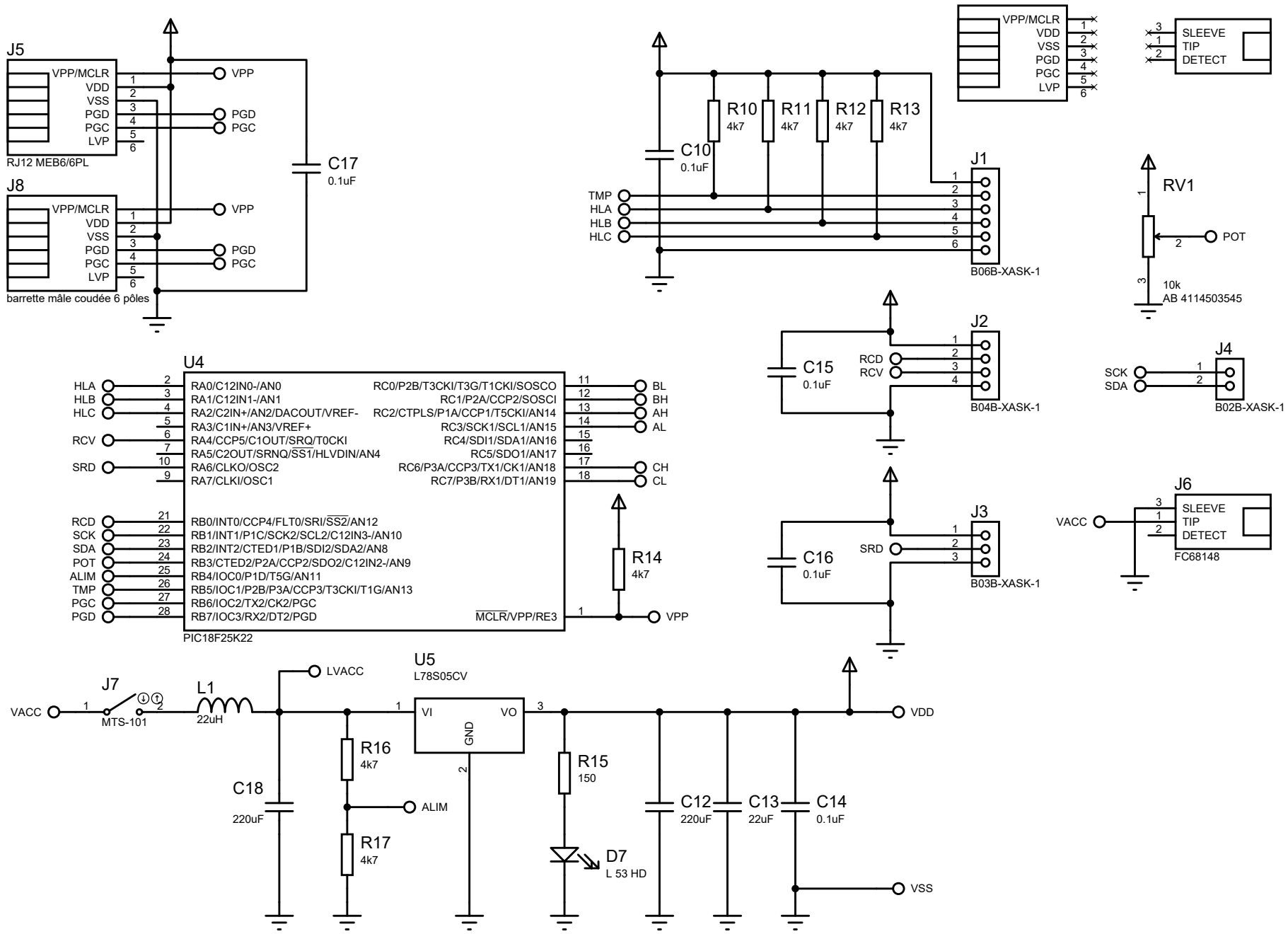
J5
VPP/MCLR
VDD
VSS
PGD
PGC
LVP
RJ12 MEB6/6PL
J8
barrette mâle coudée 6 pôles
VPP
PGD
PGC
C17
0.1uF
C10
0.1uF
R10
4k7
R11
4k7
R12
4k7
R13
4k7
TMP
HLA
HLB
HLC
J1
B06B-XASK-1
SLEEVE
TIP
DETECT
RV1
POT
10k
AB 4114503545
J2
B04B-XASK-1
C15
0.1uF
RCD
RCV
J4
SCK
SDA
B02B-XASK-1
U4
PIC18F25K22
RA0/C12IN0-/AN0
RA1/C12IN1-/AN1
RA2/C2IN+/AN2/DACOUT/VREF-
RA3/C1IN+/AN3/VREF+
RA4/CCP5/C1OUT/SRQ/T0CKI
RA5/C2OUT/SRNQ/SS1/HLVDIN/AN4
RA6/CLKO/OSC2
RA7/CLKI/OSC1
RB0/INT0/CCP4/FLT0/SRI/SS2/AN12
RB1/INT1/P1C/SCK2/SCL2/C12IN3-/AN10
RB2/INT2/CTED1/P1B/SDI2/SDA2/AN8
RB3/CTED2/P2A/CCP2/SDO2/C12IN2-/AN9
RB4/IOC0/P1D/T5G/AN11
RB5/IOC1/P2B/P3A/CCP3/T3CKI/T1G/AN13
RB6/IOC2/TX2/CK2/PGC
RB7/IOC3/RX2/DT2/PGD
RC0/P2B/T3CKI/T3G/T1CKI/SOSCO
RC1/P2A/CCP2/SOSCI
RC2/CTPLS/P1A/CCP1/T5CKI/AN14
RC3/SCK1/SCL1/AN15
RC4/SDI1/SDA1/AN16
RC5/SDO1/AN17
RC6/P3A/CCP3/TX1/CK1/AN18
RC7/P3B/RX1/DT1/AN19
MCLR/VPP/RE3
BL
BH
AH
AL
CH
CL
R14
4k7
J3
B03B-XASK-1
C16
0.1uF
SRD
J6
FC68148
VACC
J7
MTS-101
L1
22uH
LVACC
U5
L78S05CV
VI
VO
GND
R16
4k7
R17
4k7
ALIM
C18
220uF
R15
150
D7
L 53 HD
C12
220uF
C13
22uF
C14
0.1uF
VDD
VSS