Problem 1 - Hammer mechanism

Given: $I_A, I_B, r, l, e, \omega_1$

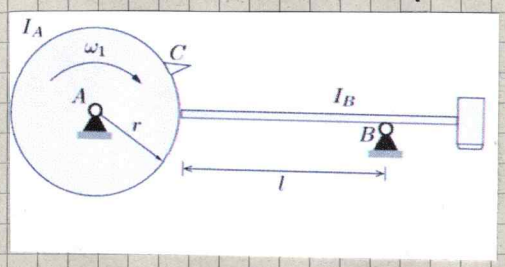

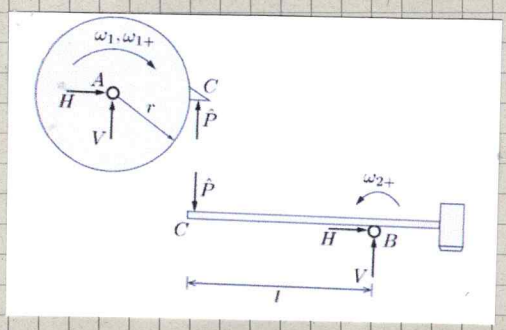

Part 1

Let us first use the integrated AMB for a collision of rigid bodies:

i) $-r\hat{P} = I_A(\omega_{1+} - \omega_{1-})$ (Disk)

same $\hat{P}$!

ii) $l\hat{P} = I_B(\omega_{2+} - 0)$ (Hammer)

(we use $\omega_{i\pm}$ as $\omega_i(t_\pm)$)

To get one more equation we can use the coefficient of restitution:

$$e = -\frac{v_{C1+} - v_{C2+}}{v_{C1-} - v_{C2-}}$$

with: $v_{C1-} = \omega_1 \cdot r$, $v_{C1+} = \omega_{1+} \cdot r$

$v_{C2-} = 0$, $v_{C2+} = \omega_{2+} \cdot l$

iii) $\Rightarrow e = -\dfrac{r\omega_{1+} - l\omega_{2+}}{r\omega_1}$

iv) $\Rightarrow \omega_{1+} = \dfrac{l}{r}\omega_{2+} - e\omega_1$

We can now combine i) and ii) and solve for ω_{2+}

$$\Rightarrow \quad \omega_{2+} = \frac{l I_A}{r I_B} (\omega_1 - \omega_{1+})$$

Then we can use iv) in the equation above to replace the ω_{1+}

$$\Rightarrow \quad \omega_{2+} = \frac{l I_A}{r I_B} \left(\omega_1 - \frac{l}{r} \omega_{2+} + e \omega_1 \right)$$

$$\Rightarrow \quad \omega_{2+} + \frac{l^2 I_A}{r^2 I_B} = \frac{l I_A}{r I_B} \omega_1 (1 + e)$$

$$\Rightarrow \quad \omega_{2+} \left(\frac{r^2 I_B}{l^2 I_A} + 1 \right) = \frac{l I_A}{r I_B} \frac{r^2 I_B}{l^2 I_A} \omega_1 (1 + e)$$

$$\Rightarrow \quad \omega_{2+} = \omega_1 \frac{(1+e) \frac{r}{l}}{1 + \frac{r^2 I_B}{l^2 I_A}}$$

And using iv) we find ω_{1+}:

$$\omega_{1+} = \omega_1 \frac{1 - e \frac{r^2 I_B}{l^2 I_A}}{1 + \frac{r^2 I_B}{l^2 I_A}}$$

Part 2

The energy loss is: $T_- - T_+ = E_{loss}$ as we only have kinetic energy.

$$T_- = \frac{1}{2} \omega_1^2 I_A \qquad T_+ = \frac{1}{2} \omega_{1+}^2 I_A + \frac{1}{2} \omega_{2+}^2 I_B$$

using $r^2 I_B = l^2 I_A$ on the expressions we found before:

$$E_{loss} = \frac{1}{8} I_A \omega_1^2 \left[4 - (1-e)^2 - (1+e)^2 \right]$$

$$= \frac{1}{4} I_A \omega_1^2 (1 - e^2)$$

Problem 2 - The decisive shot

Given: $I_A, m, r, \alpha, e, v_0, g$

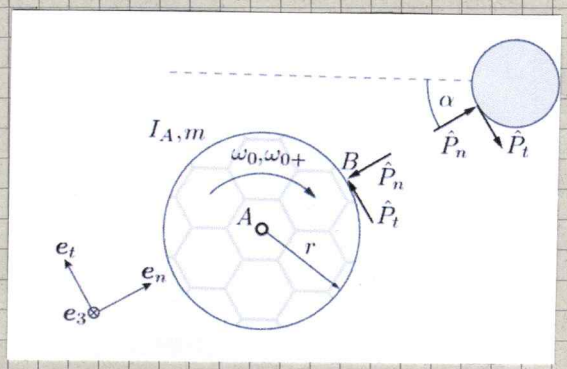

We can first use AMB and LMB for the ball. For the post this is irrelevant since it does not move.

$$\text{i)} \quad m(v_{0+,n} - v_{0-,n}) = -\hat{P}_n \, \underline{e}_n$$

$$\text{ii)} \quad m \, v_{0+,t} = \hat{P}_t \, \underline{e}_t$$

$$\text{iii)} \quad I_A(\omega_{0+} - \omega_{0-}) = -r \, \hat{P}_t \, \underline{e}_3$$

We can also write for the coefficient of restitution:

$$e = -\frac{v_{0+,n}}{v_{0-,n}} \Rightarrow v_{0+,n} = -e \, v_{0-,n}$$

The ball sticks to the pole so its velocity at the contact point must vanish!

$$\underbrace{v_{B+,t} = v_{0+,t} - r\omega_{0+}}_{\text{velocity transfer formula in 2D!}} \overset{!}{=} 0$$

Using this and iii) and ii) we find:

$$v_{0+,t} = r\omega_{0,+} = \frac{r\omega_0}{1 + \frac{r^2 m}{I_A}}$$

If the ball is to cross the goal line it has to have a velocity pointing in that direction, so:

$$v_{0t,n} \sin(\alpha) + v_{0t,t} \cos(\alpha) \overset{!}{>} 0$$

$$\Rightarrow \quad \underline{\underline{\omega_0 > \frac{e v_0}{r} \left(1 + \frac{r^2 m}{I_A}\right) \tan(\alpha)}}$$

Problem 5 - Passive and active rotations

Part 1

To find the components of $[\underline{v}]_M$ we need to project $[\underline{v}]_C$ onto the basis of M.

$$\Rightarrow [\underline{v}]_M = [\underline{e}_i^M]_C \cdot [\underline{v}]_C \cdot \underline{e}_i^M \quad , \quad i \in [1, 3]$$

$$\Rightarrow \underline{\underline{[\underline{v}]_M = \begin{pmatrix} -\sqrt{2} \\ 0 \\ -1 \end{pmatrix}}}$$

Part 2

Now we have active rotation and our Rotation matrix looks like this:

$$[\underline{R}]_M = \begin{pmatrix} 1 & 0 & 0 \\ 0 & \cos\pi/2 & -\sin\pi/2 \\ 0 & \sin\pi/2 & \cos\pi/2 \end{pmatrix} \cdot \begin{pmatrix} \cos\pi/4 & 0 & \sin\pi/4 \\ 0 & 1 & 0 \\ -\sin\pi/4 & 0 & \cos\pi/4 \end{pmatrix} \begin{pmatrix} 1 & 0 & 0 \\ 0 & \cos\pi/2 & -\sin\pi/2 \\ 0 & \sin\pi/2 & \cos\pi/2 \end{pmatrix}$$

$$\underline{\underline{[\underline{u}]_M = [\underline{R}]_M [\underline{v}]_M = \begin{pmatrix} 1 \\ 1 \\ 1 \end{pmatrix}}}$$

Note: $[\underline{u}]_M$ and $[\underline{v}]_C$ have the same <u>components</u> but they are not the same <u>vector</u> as they are expressed in different frames!