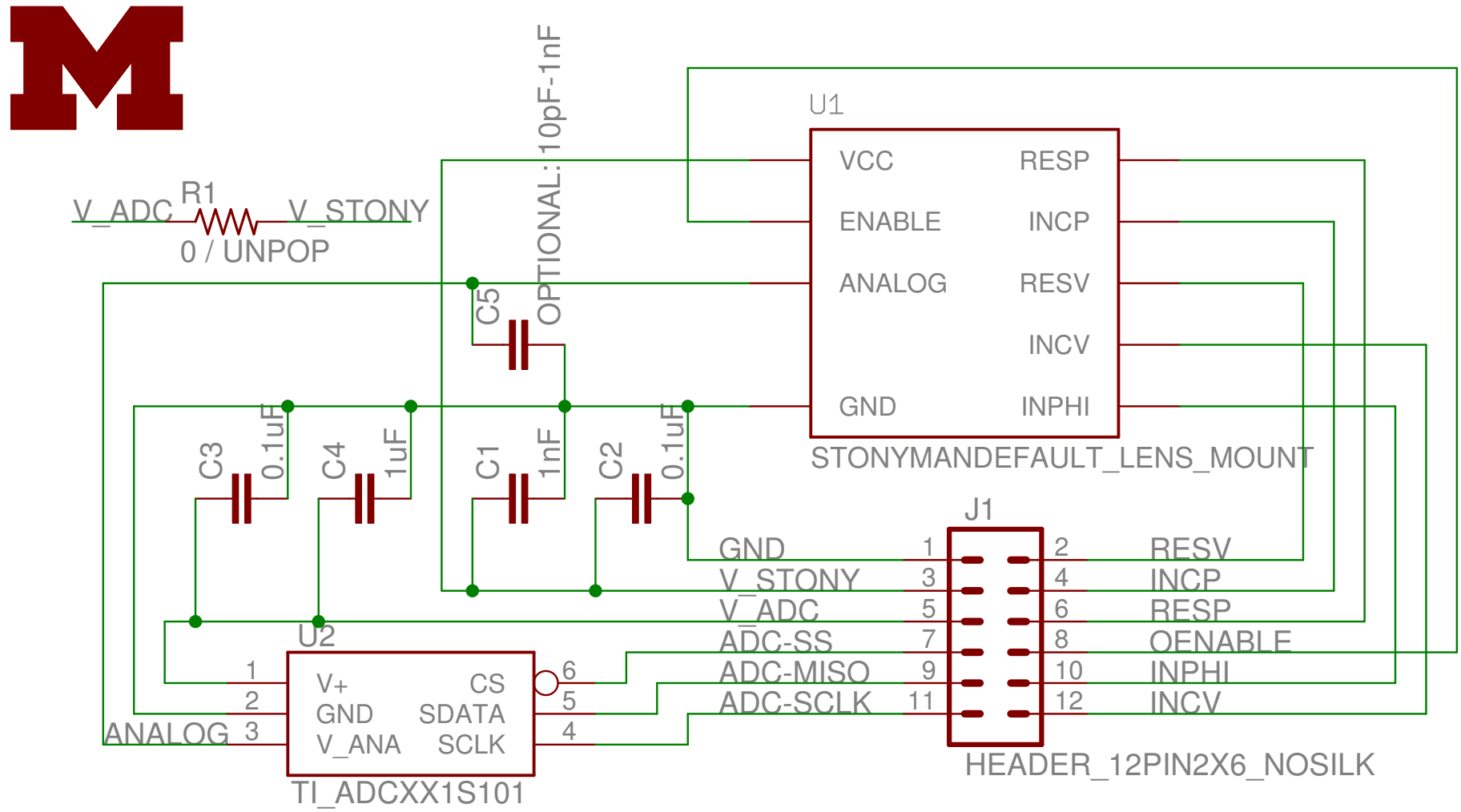
U1
VCC
ENABLE
ANALOG
GND
RESP
INCP
RESV
INCV
INPHI
STONYMANDEFAULT_LENS_MOUNT
V_ADC
R1
V_STONY
0 / UNPOP
C5
OPTIONAL: 10pF-1nF
C3
0.1uF
C4
1uF
C1
1nF
C2
0.1uF
J1
GND
V_STONY
V_ADC
ADC-SS
ADC-MISO
ADC-SCLK
RESV
INCP
RESP
OENABLE
INPHI
INCV
HEADER_12PIN2X6_NOSILK
U2
V+
GND
V_ANA
CS
SDATA
SCLK
ANALOG
TI_ADCXX1S101

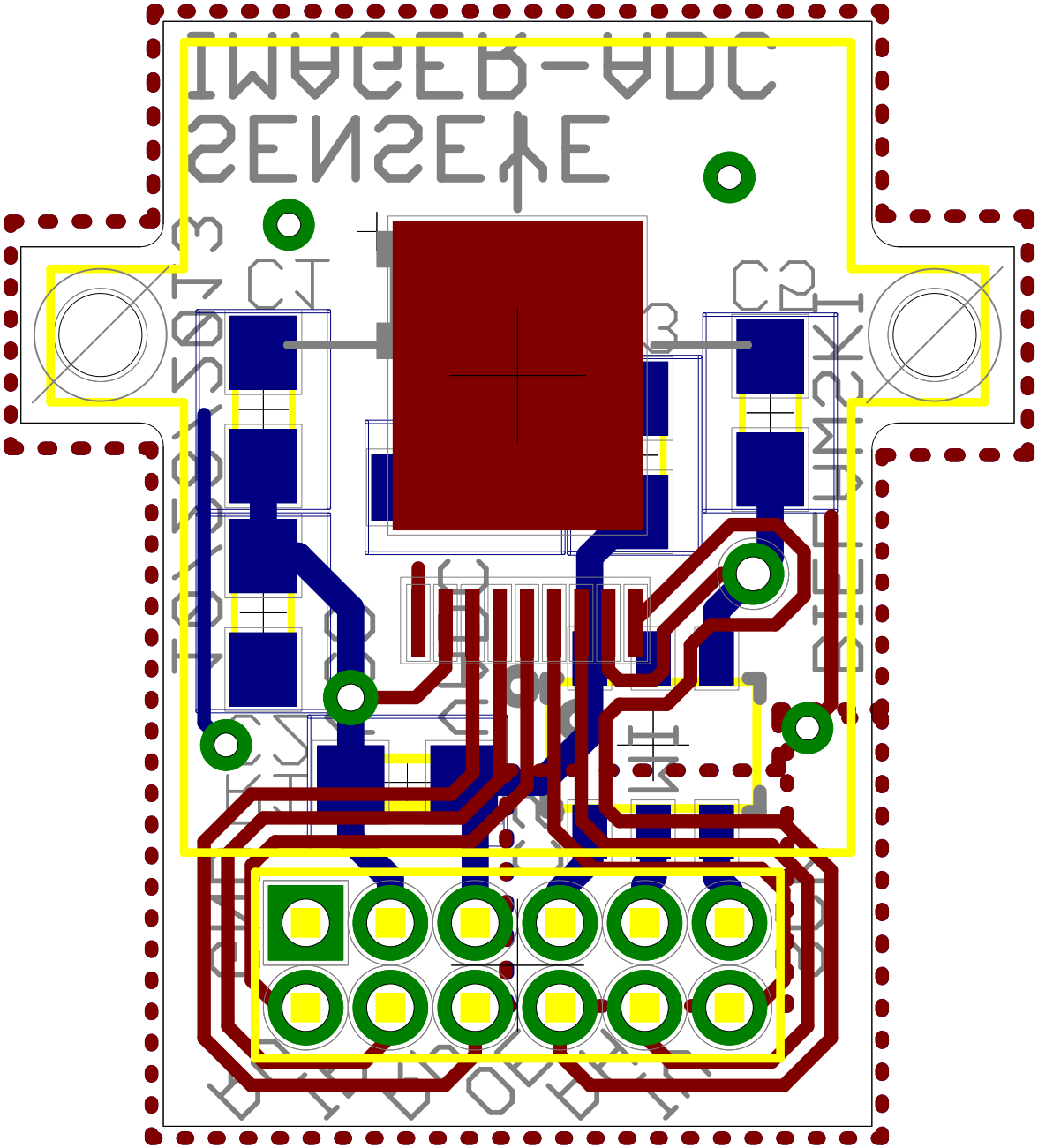

10/28/13 6:55 PM f=10.00 /home/russ/eagle/senseye-insight/stonyman-imager-board.brd

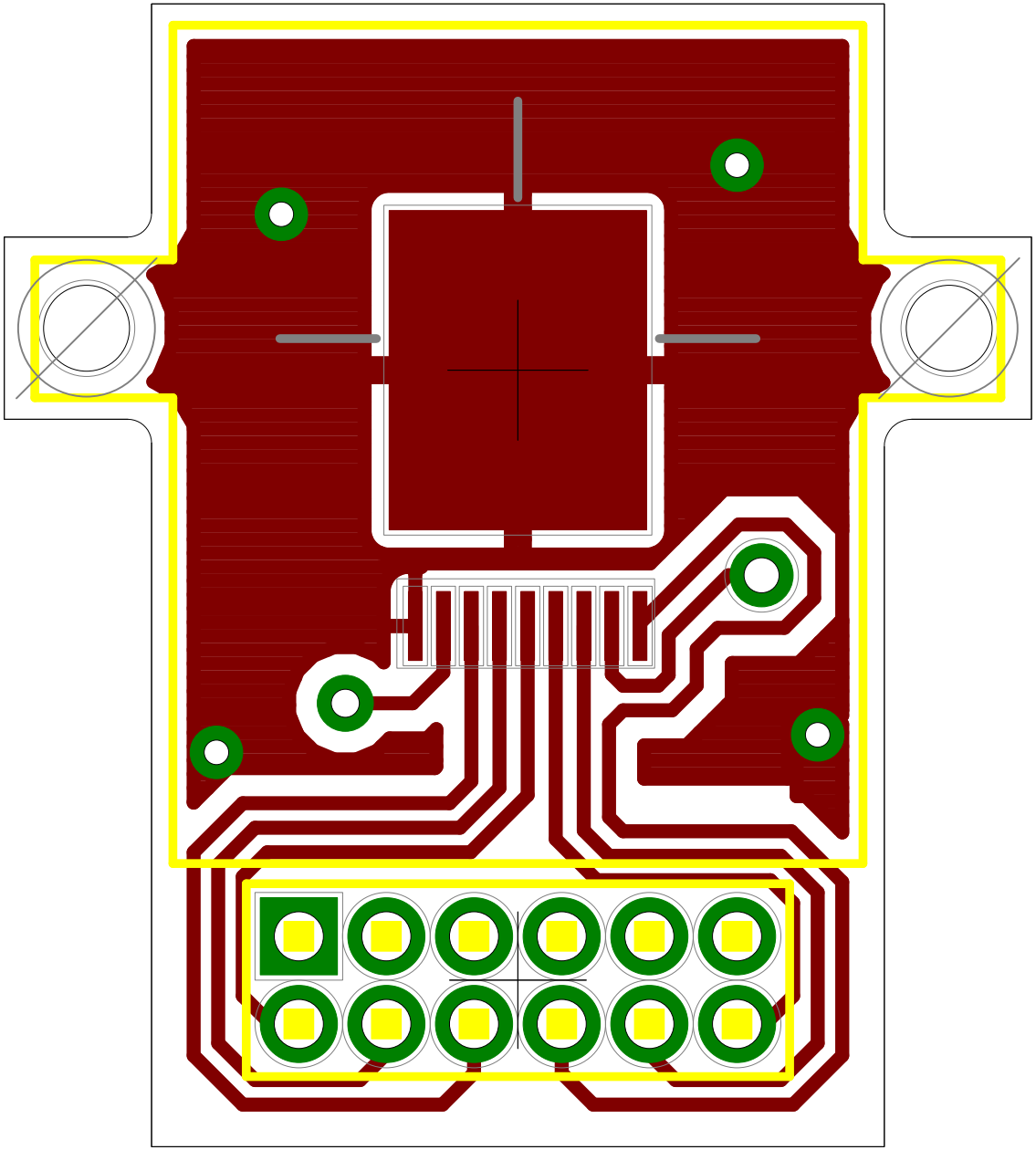

10/28/13 6:56 PM f=10.00 /home/russ/eagle/senseye-insight/stonyman-imager-board.brd

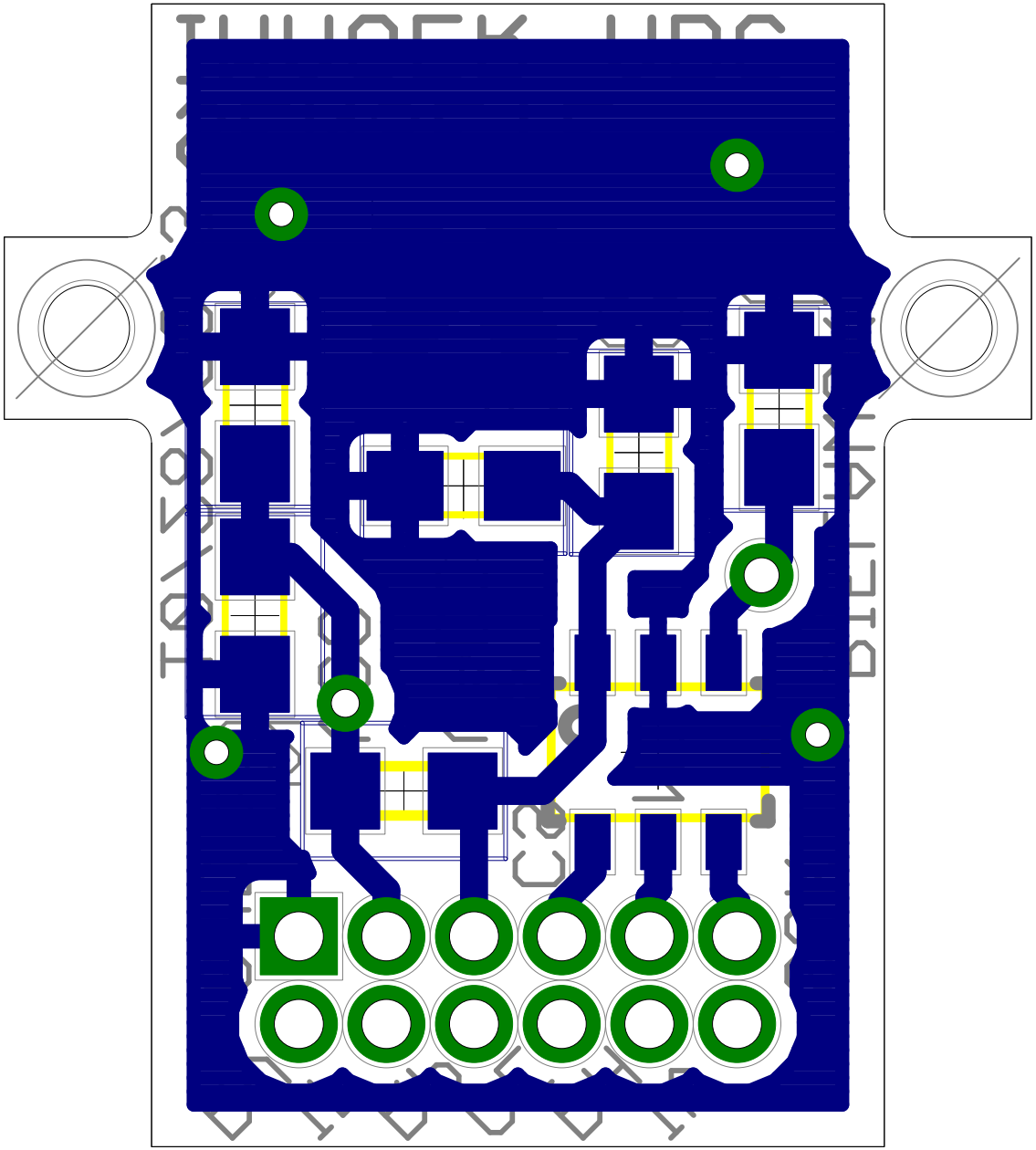

10/28/13 6:56 PM f=10.00 /home/russ/eagle/senseye-insight/stonyman-imager-board.brd

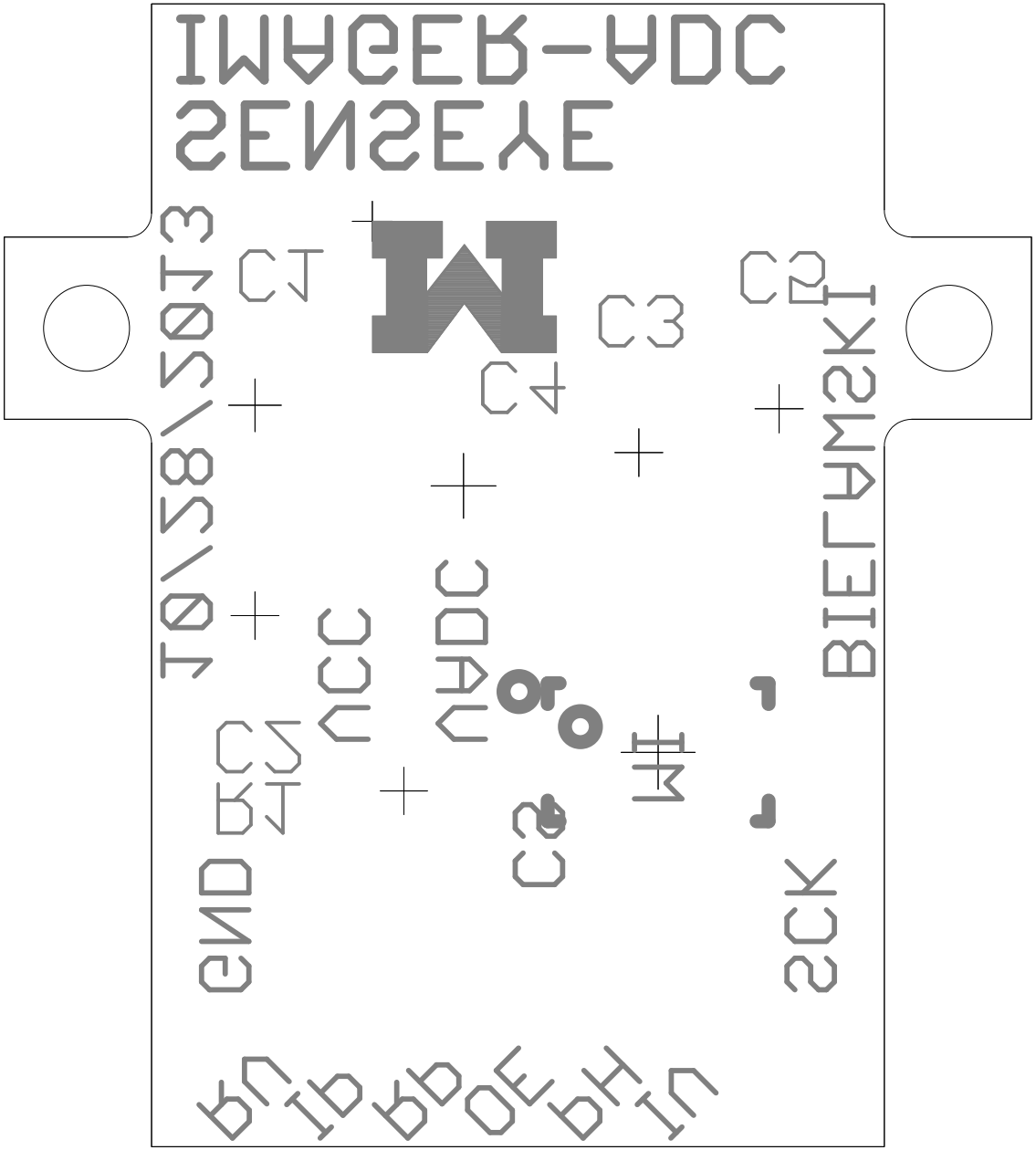
SENSEYE
IMAGER-ADC
BIELAMSKI
C2
C3
C4
C1
VADC
VCC
GND
C5
C6
SCK
PWDN
PDOE
PH
LN
J0/J8/J0T3