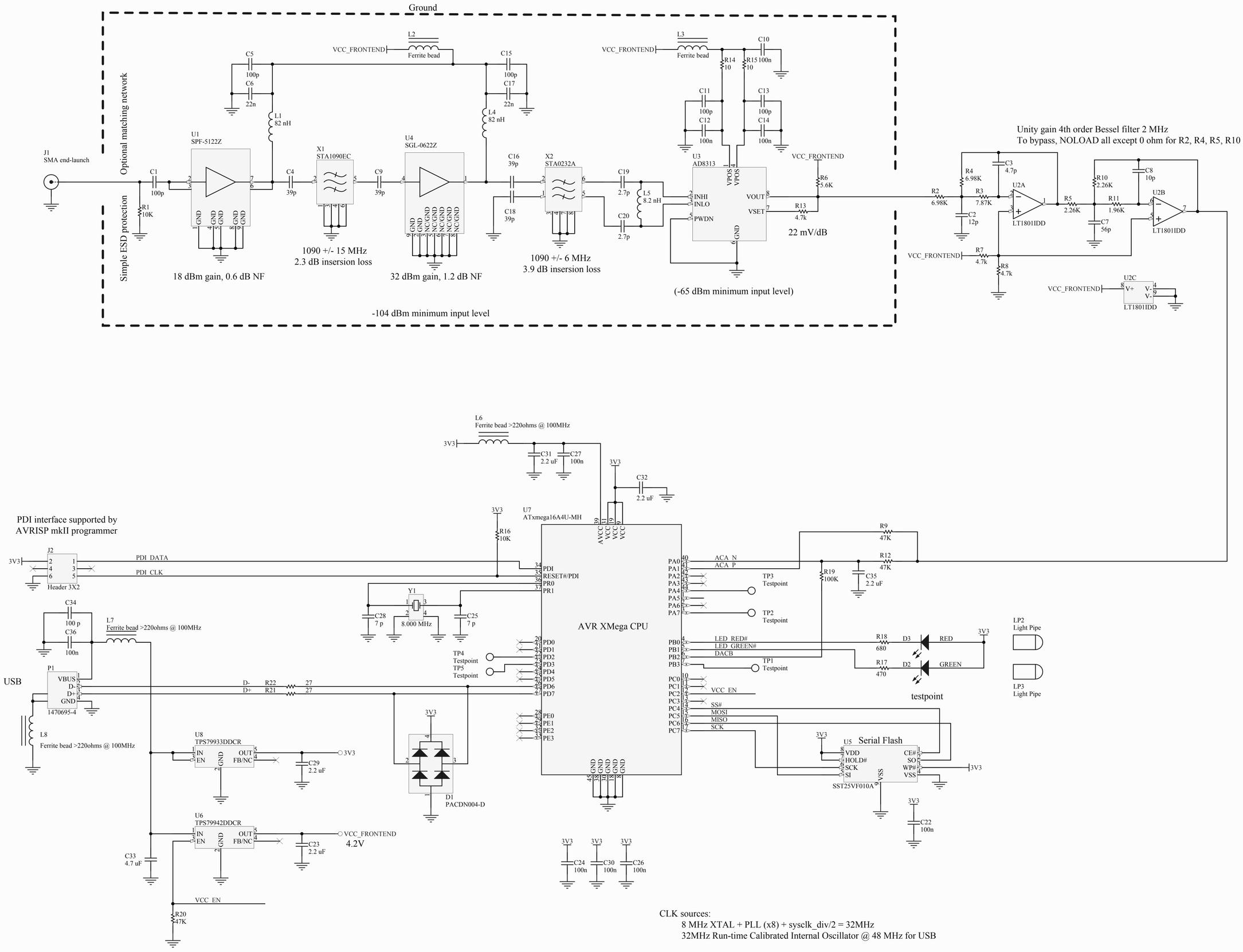

CLK sources:

8 MHz XTAL + PLL (x8) + sysclk_div/2 = 32MHz

32MHz Run-time Calibrated Internal Oscillator @ 48 MHz for USB

Title: OpenADSB Receiver and Decoder		
Size: C	Number	Revision: A
Date: 1/19/2013	Sheet 1 of 1	
File: C:\svn\..\openadsb_rev_a.SchDoc	Drawn By: B. Kuschak	