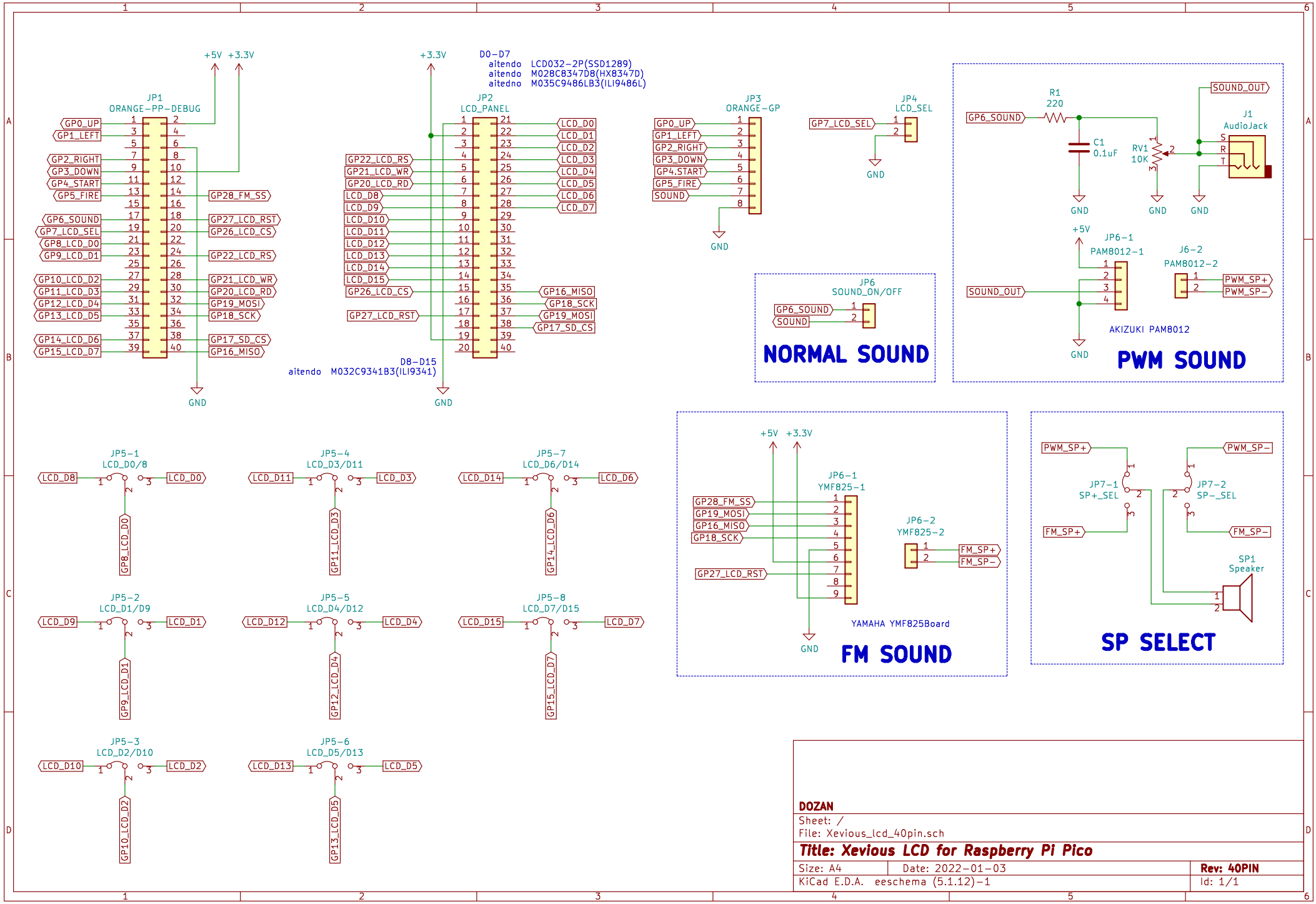

DOZAN

Sheet: /

File: Xevious_lcd_40pin.sch

Title: Xevious LCD for Raspberry Pi Pico

Size: A4	Date: 2022-01-03	**Rev: 40PIN**
KiCad E.D.A. eeschema (5.1.12)-1		Id: 1/1