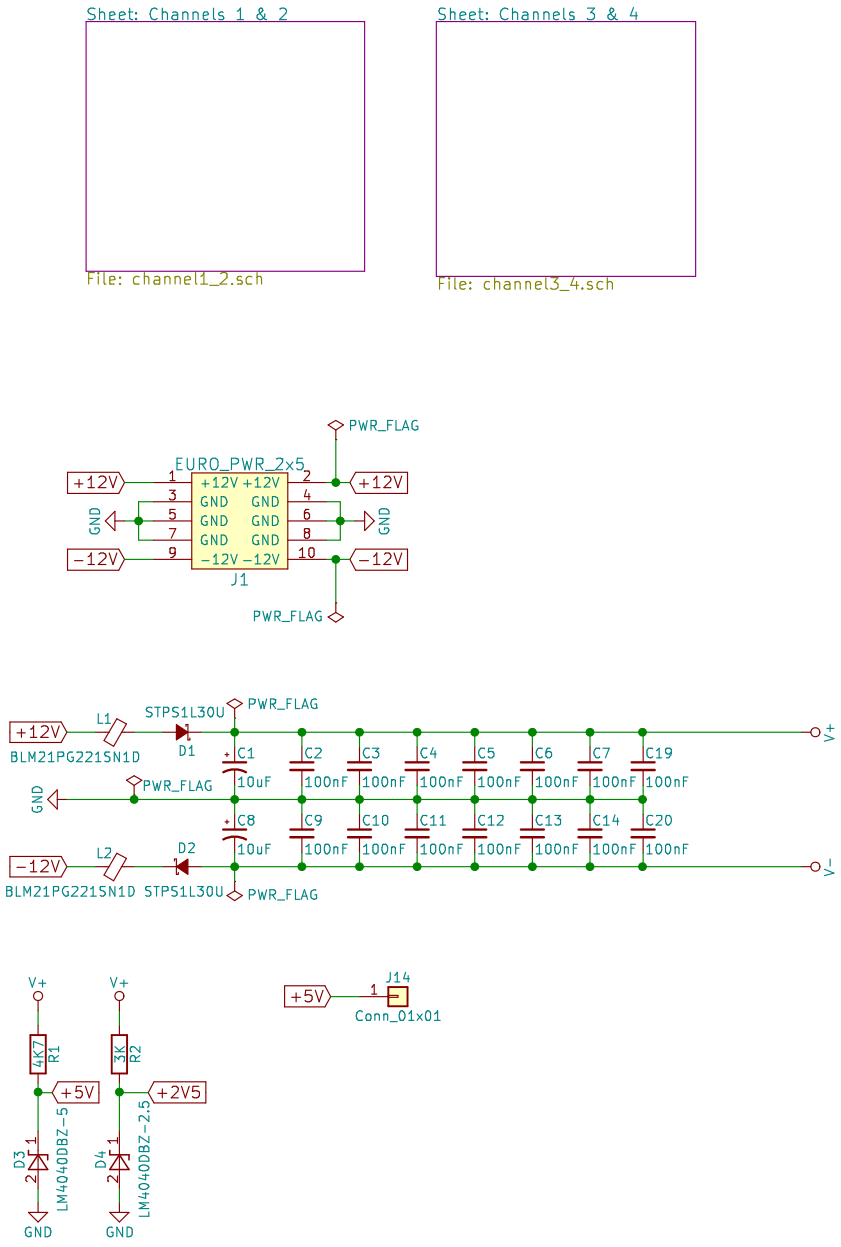

(c) 2020 Nicholas M. Tuckett

Sheet: /
File: muter_ota.sch

Title: OTA Muter

Size: A4	Date: 2020-06-21	Rev: 1
KiCad E.D.A. kicad 4.0.7-e2-637658ubuntu14.04.1		Id: 1/3

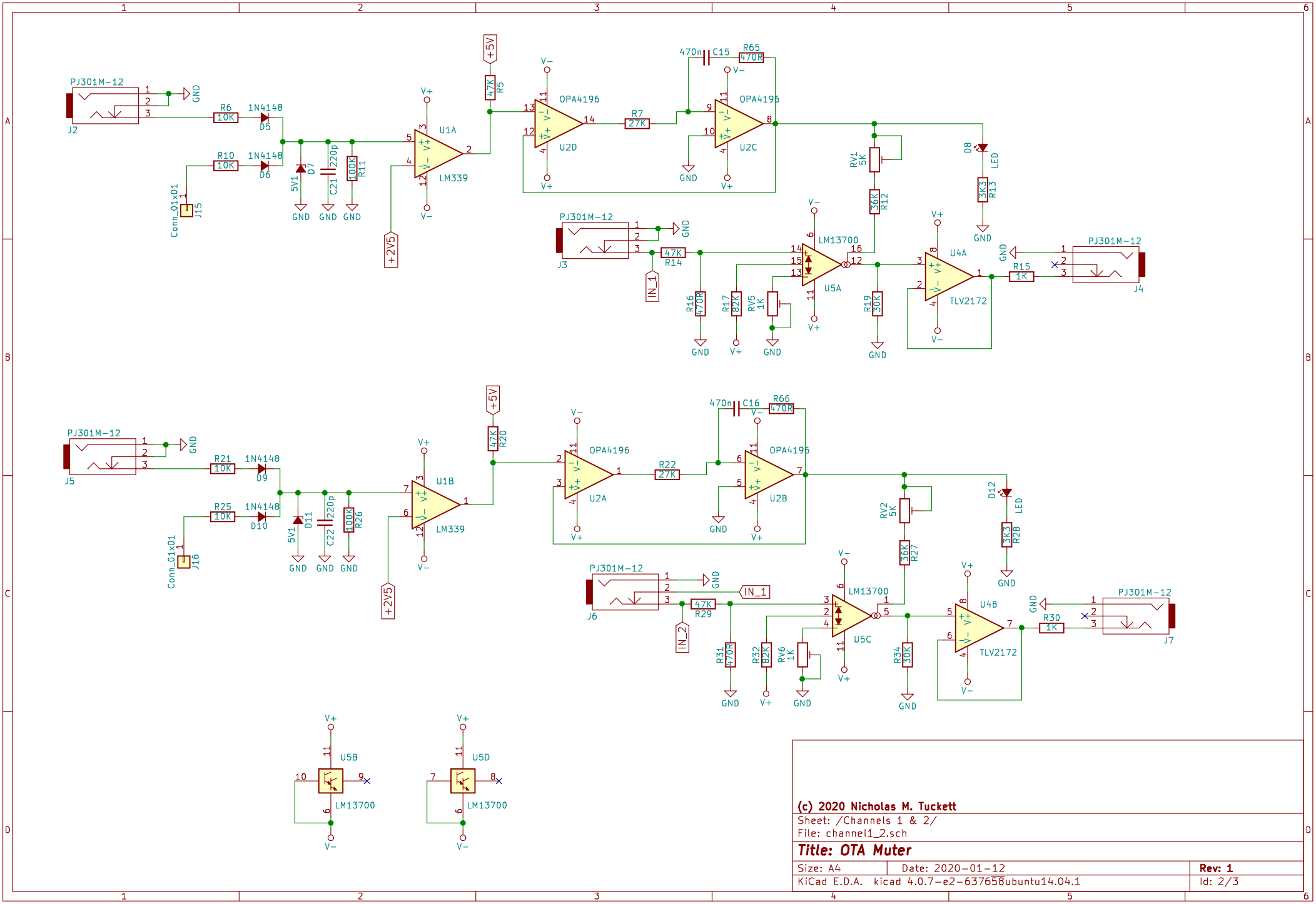

(c) 2020 Nicholas M. Tuckett

Sheet: /Channels 1 & 2/
File: channel1_2.sch

Title: OTA Muter

Size: A4	Date: 2020-01-12	Rev: 1
KiCad E.D.A. kicad 4.0.7-e2-637658ubuntu14.04.1		Id: 2/3

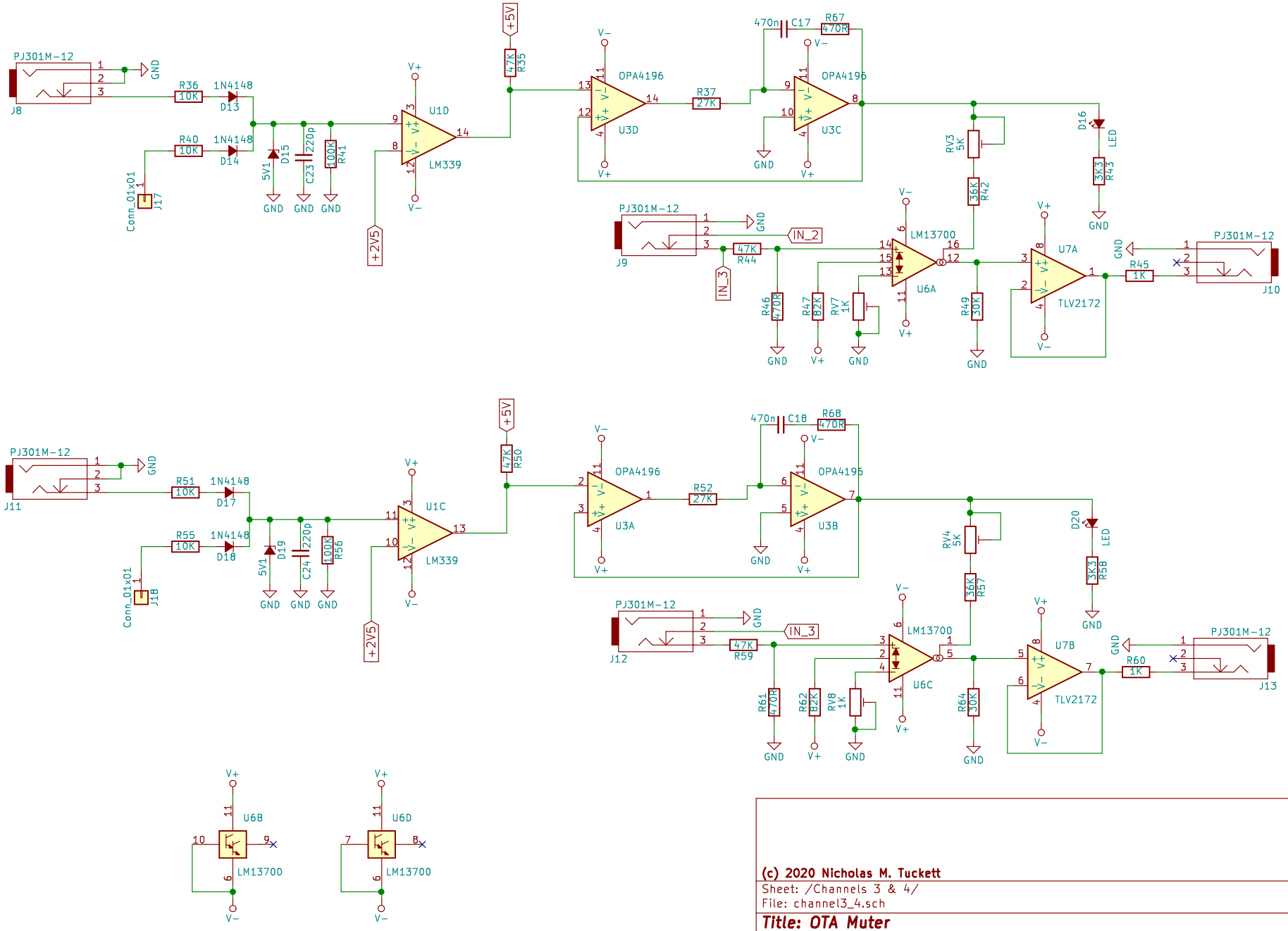

(c) 2020 Nicholas M. Tuckett

Sheet: /Channels 3 & 4/
File: channel3_4.sch

Title: OTA Muter

Size: A4	Date: 2020-01-12	Rev: 1
KiCad E.D.A. kicad 4.0.7-e2-637658ubuntu14.04.1		Id: 3/3