Security Concept

Mr.Gopal Sakarkar

Engineering | Management | Law | Schools | Other Courses
▪ NAGPUR ▪ AMRAVATI ▪ AHMEDNAGAR ▪ PUNE ▪ JALGAON ▪ RAIPUR ▪
RAISONI GROUP OF INSTITUTIONS

Public Key Cryptography

- It is used two keys for encryption and for decryption.
  - a public-key, which may be known by anybody, and can be used to encrypt messages
  - a private-key, known only to the recipient, used to decrypt messages

- It has six ingredient

1 Plain text
2 Encryption algorithm
3 Public and private keys
4 Ciphertext
5 Decryption algorithm

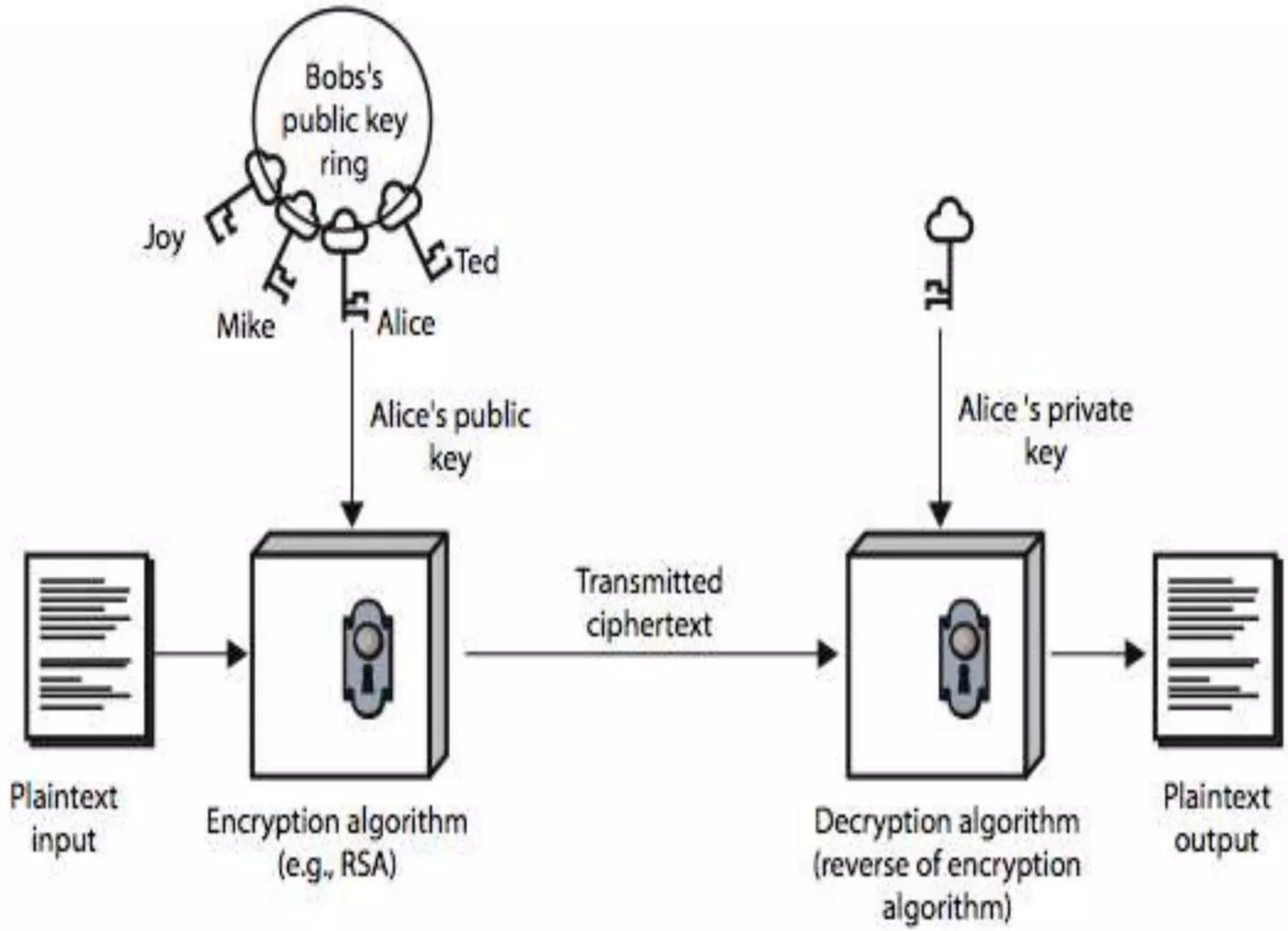

(a) Encryption

Public-Key Characteristics

- Public-Key algorithms rely on two keys where:
  - it is computationally infeasible to find decryption key knowing only algorithm & encryption key
  - it is computationally easy to en/decrypt messages when the relevant (en/decrypt) key is known
  - either of the two related keys can be used for encryption, with the other used for decryption (for some algorithms)

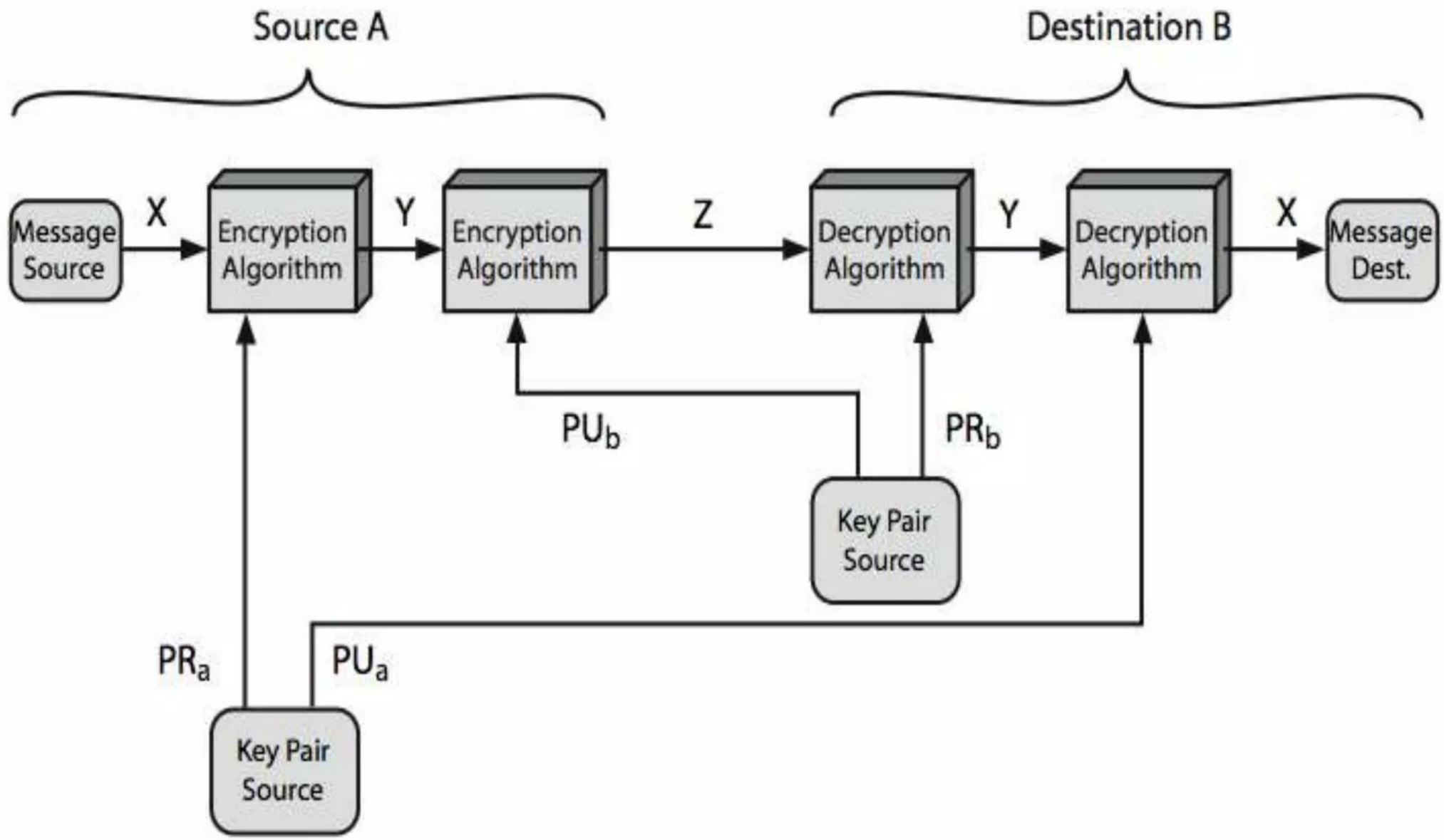

Public key Cryptosystem : Authentication and secrecy

Requirement of Public key Cryptography

1. It is easy for party **B** to generate a pair of keys (public key **PU_b** , Private key **PR_b**).
2. It is easy for a sender **A** , knowing the public key and message to be encrypt. **$C=E(PU_b, M)$**
3. It is easy for receiver **B** to decrypt the resulting ciphertext using the private key . **$M=D(PR_b,C)=D[PR_b,E(PU_b,M)]$**
4. It is infeasible for an any person , to know the public key **PU_b** to determine the private key **PR_b**.
5. It is infeasible for any person to know the public key **PUb** and a ciphertext **C** to recover the original message **M.**
6. Two keys can be applied in either order

$$M=DP[PU_b, E(PR_b,M)] = D[PR_b,E(PU_b, M)]$$

Exercise

- Explain the difference between conventional and public key encryption.
- What are the different requirements for public key cryptography .

Related Links

- http://docs.sun.com/source/816-6154-10/contents.htm

RSA

- Invented by **R**ivest, **S**hamir & **A**dleman of MIT in 1977
- It is a best known & widely used public-key scheme.
- It is a **block cipher algorithm** in which palintext and ciphertext integers between 0 to n-1 for some ***n.***
- A typical size for ***n*** is 1024 bits or 309 decimal digits.

RSA Algorithm

Key Generation

Select p, q	p, q both prime, $p \neq q$
Calculate $n = p \times q$	
Calculate $\phi(n) = (p-1) \times (q-1)$	
Select integer e	$\gcd(\phi(n), e) = 1;\ 1 < e < \phi(n)$
Calculate d	
Public key	$KU = \{e, n\}$
Private key	$KR = \{d, n\}$

Encryption

Plaintext:	$M < n$
Ciphertext:	$C = M^e \pmod n$

Decryption

Ciphertext:	C
Plaintext:	$M = C^d \pmod n$