Technical Report: Distributed Asynchronous Pose Graph Optimization over Planar Unit Dual Quaternions

***Abstract*— Distributed pose graph optimization helps enable multi-agent localization. However, many existing approaches assume that uncertainties in robots' positions and orientations are decoupled, which does not hold in some applications. Therefore, in this work we develop a distributed algorithm for solving pose graph optimization problems with anisotropic uncertainties. We model planar robot poses on the manifold of planar unit dual quaternions. Then we develop a new distributed Riemannian Levenberg-Marquardt method on this manifold in which robots' computations and communications are asynchronous, subject only to bounded communication delays. We prove that this algorithm converges to first-order critical points of the robots' objective from all initializations. Experiments on standard benchmarks demonstrate that, under anisotropic uncertainties, our algorithm reduces pose graph estimation error by 4.25% to 19.31% when compared to state-of-the-art centralized solvers.**

I. Introduction

Multi-robot systems are increasingly applied in complex environments for tasks ranging from search and rescue [1] [2] to cooperative exploration [3], [4]. To work autonomously in unknown environments, robots often use collaborative simultaneous localization and mapping (CSLAM) [5]–[9] to build a shared map via pose graph optimization (PGO). While centralized PGO solvers, such as SE-Sync [10], Cartan-Sync [11], and CPL-Sync [12] are well established, they suffer from single points of failure and communication bottlenecks, which are undesirable for multi-robot systems. Consequently, there is a need for decentralized architectures that do not rely on a single coordinator.

To address these challenges, decentralized PGO algorithms have been developed. Early synchronous methods [13] force robots to wait for the slowest among them, which can delay convergence. Asynchronous solvers like ASAPP [14] and the framework in [15] resolve this bottleneck but assume isotropic uncertainty, which limits accuracy in applications in which sensor uncertainty is anisotropic [16]. Although methods like MESA [17] and DVM-SLAM [18] improve accuracy by handling anisotropic noise, they lack proofs of convergence. Majorization-minimization (MM) frameworks have been proposed to provide rigorous convergence guarantees for distributed PGO [19], but only for simplified PGO approximations rather than the exact PGO problem.

In this paper, we formulate the distributed PGO problem on the manifold of planar unit dual quaternions (PUDQs) using an anisotropic noise model, and we solve the exact PGO problem without approximating it. We develop a distributed Riemannian Levenberg-Marquardt (RLM) algorithm that employs a damping parameter adapted to the manifold's local curvature, which helps to ensure global convergence to first-order critical points under asynchronous computations and communications. To the best of our knowledge, this is the first asynchronous distributed PGO algorithm that provably converges with anisotropic uncertainty. Our approach achieves this global convergence from any initialization, which removes the need for specialized initialization rules required by some existing frameworks [10], [11], [13].

A. Summary of Contributions

To summarize, the main contributions of this paper are:

1) We develop the first asynchronous distributed pose graph optimization algorithm formulated on the manifold of planar unit dual quaternions that explicitly accounts for anisotropic uncertainties (Algorithm 1).
2) We prove that, under bounded communication delays, the proposed algorithm achieves global convergence to first-order critical points from any initialization, and we derive a convergence rate (Theorems 1, 2, and 3).
3) We demonstrate the effectiveness of our approach through simulations on standard benchmarks, and we show up to a 19.31% reduction in pose graph estimation error relative to state-of-art centralized solvers, despite the fact that our algorithm is distributed and asynchronous (Section VI).

The rest of this paper is organized as follows. Section II gives background, and Section III formulates the multi-robot PGO problem on the manifold of unit dual quaternions. Section IV develops the distributed RLM algorithm, and Section V proves that it converges to first-order critical points under bounded communication delays. Then Section VI presents simulation results on standard PGO benchmarks, and Section VII concludes.

Notation We use $\mathbb{N}$ to denote the positive integers and $\mathbb{R}$ to denote the reals. Given real numbers $a_1, a_2, \ldots, a_n$, we use $\operatorname{diag}(a_1, a_2, \ldots, a_n)$ to denote the diagonal matrix with $a_1, a_2, \ldots, a_n$ on its main diagonal. Given a collection of vectors $v_1, v_2, \ldots, v_N$, we write $(v_i)_{i=1}^N$ to denote the tuple $(v_1, v_2, \ldots, v_N)$. For a tuple of vectors $(v_i)_{i=1}^N$, we define $\operatorname{vec}\big((v_i)_{i=1}^N\big) = \big[v_1^\top, v_2^\top, \ldots, v_N^\top\big]^\top$. For $n \in \mathbb{N}$ we define $[n] = \{1, \ldots, n\}$. We define the function $\operatorname{sinc}(x) = \frac{\sin x}{x}$, where $\operatorname{sinc}(0) = 1$. We write $\arctan$ for the four-quadrant arctangent function, and we use $\|\cdot\|$ to denote the Euclidean norm.

II. Preliminaries

This section outlines the key mathematical concepts needed for our approach.

A. PUDQ Representation of Rigid Motion

We use planar unit dual quaternions (PUDQs) to parameterize the group of planar rigid motions $\mathrm{SE}(2)$ [20]. Let $\{\mathbf{i}, \mathbf{j}, \mathbf{k}\}$ be an orthonormal basis. Then a planar rigid motion can be associated with a translation $\mathbf{t} = t_x\mathbf{i} + t_y\mathbf{j}$ for some $t_x, t_y \in \mathbb{R}$ and a rotation by $\theta \in (-\pi, \pi]$ about the $\mathbf{k}$-axis. This planar rigid motion can be encoded as a unit dual quaternion $\mathbf{x} = \mathbf{x}_r + \varepsilon\mathbf{x}_d$, where ε is the dual unit satisfying $\varepsilon \neq 0$ and $\varepsilon^2 = 0$. The real component $\mathbf{x}_r \in \mathbb{S}^1$ can be computed with $\mathbf{x}_r \triangleq \cos(\theta/2) + \sin(\theta/2)\mathbf{k}$, and the dual component $\mathbf{x}_d \in \mathbb{R}^2$ is given by $\mathbf{x}_d \triangleq \frac{1}{2}\mathbf{t} \otimes \mathbf{x}_r$, where $\otimes$ denotes the standard Hamilton product of quaternions under the convention $\mathbf{i}^2 = \mathbf{j}^2 = \mathbf{k}^2 = \mathbf{ijk} = -1$. We sometimes refer to dual quaternions as "poses".

The composition of two dual quaternions $\mathbf{x}$ and $\mathbf{y}$, denoted by $\mathbf{x} \boxplus \mathbf{y}$, can be derived from the Hamilton and dual algebras, and it takes the form

$$\mathbf{x} \boxplus \mathbf{y} = \underbrace{\begin{bmatrix} x_0 & -x_1 & 0 & 0 \\ x_1 & x_0 & 0 & 0 \\ x_2 & x_3 & x_0 & -x_1 \\ x_3 & -x_2 & x_1 & x_0 \end{bmatrix}}_{Q_L(\mathbf{x})} \underbrace{\begin{bmatrix} y_0 \\ y_1 \\ y_2 \\ y_3 \end{bmatrix}}_{\mathbf{y}} = \underbrace{\begin{bmatrix} y_0 & -y_1 & 0 & 0 \\ y_1 & y_0 & 0 & 0 \\ y_2 & -y_3 & y_0 & y_1 \\ y_3 & y_2 & -y_1 & y_0 \end{bmatrix}}_{Q_R(\mathbf{y})} \underbrace{\begin{bmatrix} x_0 \\ x_1 \\ x_2 \\ x_3 \end{bmatrix}}_{\mathbf{x}},$$

where $Q_L(\cdot)$ and $Q_R(\cdot)$ denote the left and right composition maps, respectively. The identity planar unit dual quaternion is given by $\mathbf{1} = [1, 0, 0, 0]^\top$, and the inverse of a planar unit dual quaternion $\mathbf{x}$ is given by $\mathbf{x}^{-1} = [x_0, -x_1, -x_2, -x_3]^\top$. For a dual quaternion $\mathbf{x}$, we use the standard real-vector embedding $\mathbf{x} \mapsto [x_0, x_1, x_2, x_3]^\top \in \mathbb{R}^4$ so that the set of all PUDQs forms the smooth embedded manifold

$$\mathcal{M} \triangleq \left\{\mathbf{x} \in \mathbb{R}^4 \mid h(\mathbf{x}) = \mathbf{x}^\top \tilde{P}\mathbf{x} - 1 = 0\right\} \subset \mathbb{R}^4, \quad (1)$$

where $\tilde{P} \triangleq \mathrm{diag}(1,\ 1,\ 0,\ 0)$, and h is the "defining function" of the PUDQ manifold. Following concepts in [21], to optimize over N poses, we define the product manifold $\mathcal{M}^N$, and the trajectory $X = \mathrm{vec}((\mathbf{x}_i)_{i=1}^N)$, where $\mathbf{x}_i \in \mathcal{M}$ for all $i \in [N]$. with the corresponding tangent space $\mathcal{T}_X\mathcal{M}^N$ defined as the direct sum of individual tangent spaces:

$$\mathcal{T}_{\mathcal{X}}\mathcal{M}^N = \mathcal{T}\mathbf{x}_1\mathcal{M} \oplus \mathcal{T}\mathbf{x}_2\mathcal{M} \oplus \cdots \oplus \mathcal{T}\mathbf{x}_N\mathcal{M} \subset \mathbb{R}^{4N}. \quad (2)$$

B. Lie Exponential and Logarithm

The manifold $\mathcal{M}$ with the aforementioned group structure forms a Lie group with associated Lie algebra $\mathcal{T}_{\mathbf{1}}\mathcal{M}$, which is the tangent space to $\mathcal{M}$ at the identity $\mathbf{1}$. The Lie exponential maps from $\mathcal{T}_{\mathbf{1}}\mathcal{M}$ to $\mathcal{M}$, and its inverse is the Lie logarithm map[1] For a tangent vector $\tau = [\tau_1, \tau_2, \tau_3]^\top \in \mathcal{T}_{\mathbf{1}}\mathcal{M}$, the Lie exponential map $\exp : \mathcal{T}_{\mathbf{1}}\mathcal{M} \to \mathcal{M}$ takes the form

$$\exp(\tau) = \left[\cos(\tau_1), \mathrm{sinc}\,(\tau_1)\,\tau^\top\right]^\top. \quad (3)$$

For a pose $\mathbf{x} \in \mathcal{M}$, the Lie logarithm map is $\log : \mathcal{M} \to \mathcal{T}_{\mathbf{1}}\mathcal{M}$, and it outputs the tangent vector

$$\log(\mathbf{x}) = \frac{1}{\mathrm{sinc}\,(\phi(\mathbf{x}))}[x_1, x_2, x_3]^\top, \quad (4)$$

[1]These are distinct from the Riemannian exponential and logarithm, which are included in Section IV-A and Appendix A, respectively. We use the Lie-theoretic maps for defining probability distributions on the manifold's group structure, and the Riemannian maps to compute geodesic-following iterates for our optimization algorithm.

where $\phi(\mathbf{x}) \triangleq \mathrm{wrap}(\arctan(x_1, x_0))$ and

$$\mathrm{wrap}(\alpha) \triangleq \begin{cases} \alpha + \pi & \text{if } \alpha \leq -\pi/2 \\ \alpha - \pi & \text{if } \alpha > \pi/2 \\ \alpha & \text{otherwise.} \end{cases}$$

These Lie-theoretic maps allow an anisotropic noise model by associating uncertainty with a zero-mean Gaussian distribution in the tangent space $\mathcal{T}_{\mathbf{1}}\mathcal{M}$, which is then mapped to the manifold via the Lie exponential in (3).

C. Distributed Pose Graph Construction

We consider pose graphs distributed among $R \in \mathbb{N}$ robots. We define $\mathcal{R} \triangleq [R]$, and we suppose that robot p has a trajectory of $N_p \in \mathbb{N}$ poses for each $p \in \mathcal{R}$. We model multi-robot pose graphs as directed graphs $\mathcal{G} = (\mathcal{V}, \mathcal{E})$. The vertex set $\mathcal{V}$ is

$$\mathcal{V} = \bigcup_{p=1}^{R} \left\{(p, i) \mid 1 \leq i \leq N_p\right\},$$

where vertex (p, i) corresponds to the ith pose of robot p. The edge set $\mathcal{E}$ represents relative measurements between poses, which are categorized by their connectivity across the robot team. An edge is an *intra-robot edge* if it connects two poses of the same robot p, denoted $\mathbf{x}_i^p, \mathbf{x}_j^p \in \mathcal{M}$. We use E_p^{un} to denote the set of intra-robot edges connecting *unshared* poses of robot p. Conversely, for distinct $p, q \in \mathcal{R}$, an edge is an *inter-robot edge* if it connects poses $\mathbf{x}_i^p$ and $\mathbf{x}_j^q$, and we denote the set of these shared edges as E_{pq}^{sh}. With an abuse of notation, we write the edge $((p, i), (p, j))$ as (i, j) when p is clear from context. A pose $\mathbf{x}_i^p$ is classified as *shared* if it is an endpoint of at least one inter-robot edge; otherwise, it is *unshared*. We define the neighborhood set of robot p as

$$S(p) \triangleq \{q \in \mathcal{R} \setminus \{p\} \mid E_{pq}^{\mathrm{sh}} \neq \emptyset\}, \quad (5)$$

which is the set of all other robots with which robot p shares at least one inter-robot edge in the pose graph. We define

$$\Delta \triangleq \max_{q \in \mathcal{R}} |S(q)|, \quad (6)$$

which is equal to the greatest number of other robots that any single robot shares an edge with in the pose graph. Figure 1 shows an example of a multi-robot pose graph.

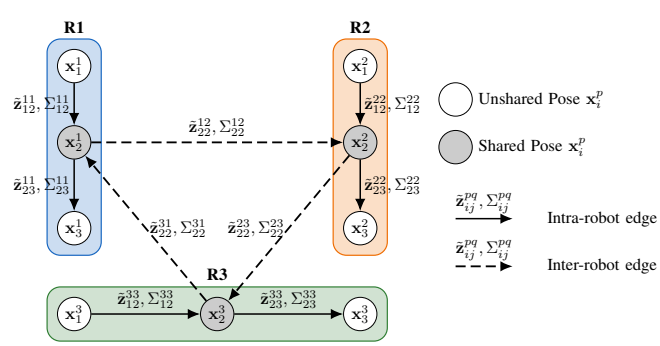

Fig. 1. Example of a three-robot pose graph $\mathcal{G}$.

III. Problem formulation

We now formulate the multi-robot PGO problem in the space of PUDQs.

A. Measurement Model and Residuals

We adopt the Lie-theoretic measurement model from [22]. The value of a relative measurement $\tilde{\mathbf{z}}_{ij}^{pq}$ from pose $\mathbf{x}_i^p \in \mathcal{M}$ to pose $\mathbf{x}_j^q \in \mathcal{M}$ is modeled as the true relative pose corrupted by Gassian noise η_{ij}^{pq} in the tangent space. Formally,

$$\tilde{\mathbf{z}}_{ij}^{pq} = \left(\mathbf{x}_i^p\right)^{-1} \boxplus \mathbf{x}_j^q \boxplus \exp(\eta_{ij}^{pq}), \quad \eta_{ij}^{pq} \sim \mathcal{N}\left(0, \Sigma_{ij}^{pq}\right), \quad (7)$$

where $\exp$ is from (3), and the matrix $\Sigma_{ij}^{pq} \in \mathbb{R}^{3\times 3}$ is symmetric and positive definite. Σ_{ij}^{pq} can be non-diagonal, allowing the model to capture anisotropic translational–rotational correlations in pose uncertainty. This formulation accurately represents the "banana-shaped" uncertainty characteristic of pose estimation as a Gaussian in exponential coordinates [23], [24]. Given a measurement $\tilde{\mathbf{z}}_{ij}^{pq}$ between poses $\mathbf{x}_i^p$ and $\mathbf{x}_j^q$,the residual vector is computed as

$$e_{ij}\left(\mathbf{x}_i^p, \mathbf{x}_j^q\right) \triangleq \log\left(\left(\tilde{\mathbf{z}}_{ij}^{pq}\right)^{-1} \boxplus \left(\mathbf{x}_i^p\right)^{-1} \boxplus \mathbf{x}_j^q\right), \quad (8)$$

with $\log(\cdot)$ from (4), and where the measurement $\tilde{\mathbf{z}}_{ij}$ is treated as a parameter of the function e_{ij} rather than an input.

For each $p \in \mathcal{R}$, robot p stores the vector of pose estimates

$$X_p \triangleq \left(\mathbf{x}_1^p, \mathbf{x}_2^p, \ldots, \mathbf{x}_{N_p}^p\right) \in \mathcal{M}^{N_p}$$

onboard, and robot p seeks to compute optimal values for these estimates by minimizing residuals of the form of (8) along edges in a given pose graph. We also define the weighted norm of these residuals as

$$\|e_{ij}\left(\mathbf{x}_i^p, \mathbf{x}_j^q\right)\|_{\Omega_{ij}^{pq}}^2 \triangleq e_{ij}\left(\mathbf{x}_i^p, \mathbf{x}_j^q\right)^\top \Omega_{ij}^{pq} e_{ij}\left(\mathbf{x}_i^p, \mathbf{x}_j^q\right), \quad (9)$$

where $\Omega_{ij}^{pq} \triangleq \left(\Sigma_{ij}^{pq}\right)^{-1}$.

B. Local Cost Functions

We use a local cost for robot p to measure error in its estimates of its own trajectory. Robot p's local cost is denoted f_p, and it contains an unshared cost h_p over its own intra-robot edges, as well as a shared cost $s_{p\leftrightarrow q}$ for each $q \in S(p)$ over its inter-robot edges with a neighboring robot q. The cost f_p takes the form

$$f_p\left(X_p, X_{S(p)}\right) = h_p\left(X_p\right) + \frac{1}{2}\sum_{q\in S(p)} s_{p\leftrightarrow q}\left(X_p, X_q\right), \quad (10)$$

where the set $S(p)$ is from (5). We define $X_{S(p)} \triangleq \{X_q\}_{q\in S(p)}$ to be the set of trajectory estimates of all neighbors of robot p in the pose graph, and

$$h_p\left(X_p\right) = \frac{1}{2}\sum_{(i,j)\in E_p^{\text{un}}} \|e_{ij}\left(\mathbf{x}_i^p, \mathbf{x}_j^p\right)\|_{\Omega_{ij}}^2 \quad (11)$$

$$s_{p\leftrightarrow q}\left(X_p, X_q\right) = \frac{1}{2}\sum_{((a,i),(b,j))\in E_{pq}^{\text{sh}}} \left\|e_{ij}\left(\mathbf{x}_i^a, \mathbf{x}_j^b\right)\right\|_{\Omega_{ij}^{ab}}^2 \quad (12)$$

where $\|e_{ij}(\cdot,\cdot)\|_{\Omega_{ij}}$ is from (9). The factor of $\frac{1}{2}$ in (10) ensures that shared edges are not counted twice when all robots' local costs are summed to form the global cost.

C. Global Optimization Problem Statement

The objective is to find trajectory estimates that minimize the sum of the local costs across all robots. Let $\mathcal{N} \triangleq \sum_{p=1}^{R} N_p$ denote the total number of vertices in the multi-robot pose graph $\mathcal{G}$. We define $\mathcal{X} \triangleq (X_1, \ldots, X_R) \in \mathcal{M}^{\mathcal{N}}$ as the full state of the multi-robot system. We define the robots' global cost function as the sum of all robots' costs, i.e.,

$$\mathcal{F}\left(\mathcal{X}\right) \triangleq \sum_{p=1}^{R} f_p\left(X_p, X_{S(p)}\right). \quad (13)$$

The value of the objective in (13) is invariant to an identical rigid transformation of all poses, which makes the minimization of $\mathcal{F}$ ill-posed. To remedy this, one must "anchor" at least one vertex by setting $\mathbf{x}_a^r \triangleq \mathbf{1}$ for some $(r, a) \in \mathcal{V}$, and we assume that this has been done for some node. The rest of the paper solves the following problem.

Problem 1. *Using $R \in \mathbb{N}$ robots that asynchronously compute and communicate, find $\mathcal{X}^* \in \operatorname{argmin}_{\mathcal{X}\in\mathcal{M}^{\mathcal{N}}} \mathcal{F}\left(\mathcal{X}\right)$, where $\mathcal{F}$ is from* (13).

Problem 1 is a non-convex least-squares problem on a product of Riemannian manifolds. We will solve it in a distributed manner, where, for all $p \in \mathcal{R}$, robot p iteratively computes new values of its trajectory estimate X_p using only communications neighbors whose indices are in $S(p)$.

IV. Proposed Algorithm

In this section, we present the distributed asynchronous Riemannian Levenberg-Marquardt (RLM) algorithm that we use to solve Problem 1. These developments draw in part from [25], which developed a centralized RLM algorithm. To the best of our knowledge, the algorithm we present is the first distributed asynchronous RLM algorithm in the literature, and it may be of independent interest.

Assumption 1 (Weak connectivity)**.** *The multi-robot pose graph $\mathcal{G}$ is weakly connected, i.e., the disoriented version of $\mathcal{G}$ is connected.*

This assumption is mild because if there exists a disconnected subgraph of $\mathcal{G} = (\mathcal{V}, \mathcal{E})$, denoted $\mathcal{G}_d = (\mathcal{V}_d, \mathcal{E}_d)$, then without loss of generality, we can define $\mathcal{G}_1 \triangleq (\mathcal{V}_d, \mathcal{E}_d)$ and $\mathcal{G}_2 \triangleq (\mathcal{V} \setminus \mathcal{V}_d, \mathcal{E} \setminus \mathcal{E}_d)$ as two independent multi-robot pose graphs to be optimized. This logic extends to any number of disconnected subgraphs.

A. Riemannian Exponential and Logarithm

The Riemannian exponential maps tangent vectors along geodesics to points on $\mathcal{M}$. Let $\psi\left(\mathbf{x}_r\right) \triangleq \arctan\left(x_1, x_0\right)$ be the map that computes the angle associated with a point on the unit circle, and $\psi^{-1}\left(\alpha\right) \triangleq \left[\cos\left(\alpha\right), \sin\left(\alpha\right)\right]^\top$ be its inverse. Then, given a pose $\mathbf{x} = \left[\mathbf{x}_r^\top, \mathbf{x}_d^\top\right]^\top \in \mathcal{M}$ and a tangent vector $\mathbf{s} = \left[\mathbf{s}_r^\top, \mathbf{s}_d^\top\right]^\top \in \mathcal{T}_{\mathbf{x}}\mathcal{M}$, the Riemannian exponential map is $\operatorname{Exp}_{\mathbf{x}} : \mathcal{T}_{\mathbf{x}}\mathcal{M} \to \mathcal{M}$, where

$$\operatorname{Exp}_{\mathbf{x}}(\mathbf{s}) \triangleq \begin{bmatrix} \mathbf{x}_r \otimes \psi^{-1}\left(\left(\mathbf{x}_r^{-1} \otimes \mathbf{s}_r\right)_2\right) \\ \mathbf{x}_d + \mathbf{s}_d \end{bmatrix}, \quad (14)$$

where $\otimes$ denotes the Hamilton product and $(\cdot)_2$ outputs the second element of a vector. It will be used in Section IV to generate iterates of an optimization algorithm that always stay on $\mathcal{M}$. And (14) extends to the product manifold $\mathcal{M}^N$. For any $\mathbf{s} = \mathrm{vec}\left((s_i)_{i=1}^N\right) \in \mathcal{T}_X\mathcal{M}^N$, we define

$$\mathrm{Exp}_X(\mathcal{S}) = \mathrm{vec}\Big(\big(\mathrm{Exp}_{\mathbf{x}_i}(\mathbf{s}_i)\big)_{i=1}^N\Big), \tag{15}$$

with $X = \mathrm{vec}\left((\mathbf{x}_i)_{i=1}^N\right) \in \mathcal{M}^N$, and $\mathrm{Exp}_{\mathbf{x}_i}(\cdot)$ from (14).

B. Timing of Computations and Communications

We model the timing of robots' computations using a randomized gossip type algorithm [14], [26], where each robot's onboard Poisson clock ticks at rate $\lambda > 0$. The inter-arrival times between clock ticks $\{\nu_1, \nu_2, \dots\}$ are i.i.d. exponential: $\mathbb{P}[\nu_{i+1} - \nu_i \le a] = 1 - e^{-\lambda a}$ for $a \ge 0$. We define a global iteration counter k, incremented at every tick across the multi-robot system, as an analysis-only variable unknown to the robots.

Each robot $p \in \mathcal{R}$ maintains a local trajectory estimate $X_p(k)$ and a set of neighbor estimates $\hat{X}_{S(p)}(k) \triangleq \{\hat{X}_q^p(k)\}_{q\in S(p)}$ at iteration k. Due to asynchronous communications, $\hat{X}_q^p(k)$ represents a potentially stale copy of robot q's shared poses stored by robot p. For brevity, we denote the robot p's local data as $D_{p_k} \triangleq \big(X_p(k), \hat{X}_{S(p)}(k)\big)$.

Remark 1. *For ease of notation and counting dimensions, we will write that robot q sends all elements of X_q to robot p when communicating, though in practice robot q only needs to send robot p any shared poses that robot q has along any inter-robot edges with robot p.*

At each local iteration, each robot $p \in \mathcal{R}$ computes new estimates of its own trajectory X_p over time, and each new estimate overwrites the old estimate it had onboard. After updating, robot p broadcasts its shared poses to all neighbors q where $q \in S(p)$. Reciprocally, when robot p receives an update from a neighbor $q \in S(p)$, it overwrites its local estimate $\hat{X}_q^p$ with the new value. When robot p's clock ticks at iteration k, it computes $X_p(k+1)$ using its current trajectory $X_p(k)$ and its local (possibly outdated) copies of estimates of shared poses of its neighbors $\hat{X}_{S(p)}(k)$. This local computation does not affect $\hat{X}_{S(p)}(k)$, which remains constant until new shared poses are received from neighbors.

For the forthcoming analysis, we define $\ell_q^p(k)$ to be the iteration at which robot q first computed the estimates of its shared poses that robot p has onboard at time k in $\hat{X}_q^p(k)$. We have $\ell_q^p(k) \le k$ by definition, and we have the following assumption about how out-of-date the value $\hat{X}_q^p(k)$ can be.

Assumption 2 (Bounded Communication Delays)**.** *For all robots $p, q \in \mathcal{R}$ and all iterations k, there exists $B \in \mathbb{N}$ such that $k - \ell_q^p(k) \le B$.*

Assumption 2 implies that any trajectory estimate stored onboard any robot is never more than B timesteps out of date. In other words, the length of all communication delays are bounded by B, though B may be large.

C. The RLM Subproblem for Computations

We describe each robot's computations next, and Algorithm 1 below gives an overview of all robots' behaviors.

By the Poisson clock definition in Section IV-B, let p_k denote the robot whose clock ticks at iteration k. This robot then updates its local trajectory estimate, $X_{p_k}(k)$. To find an improved estimate $X_{p_k}(k+1)$, it seeks to find a direction $s_{p_k}(k) \in \mathcal{T}_{X_{p_k}(k)}\mathcal{M}^{N_{p_k}}$ to move its estimate in. This direction is found by solving a subproblem based on a regularized quadratic model of its local cost of the form

$$\theta_{p_k}(s) \triangleq 2f_{p_k} + 2s^\top g_{p_k} + s^\top H_{p_k} s + \lambda_k \|s\|^2, \tag{16}$$

where $f_{p_k} \triangleq f_{p_k}(D_{p_k})$ is the local cost from (10), $g_{p_k} \triangleq \mathrm{grad} f_{p_k}(D_{p_k})$ is the Riemannian gradient, and $H_{p_k} \triangleq H_{p_k}(D_{p_k})$ is the Riemannian Gauss-Newton (RGN) Hessian approximation. Definitions of g_{p_k} and H_{p_k} are included in Appendix B. Furthermore, λ_k in (16) is the damping parameter, which we set with

$$\lambda_k = 2\mu_{p_k} f_{p_k}, \tag{17}$$

for some robot-specified constant $\mu_{p_k} > 0$. Using (16), robot p_k computes the search direction s_{p_k}, defined as

$$s_{p_k} \triangleq \mathrm{argmin}_{s\in T_{X_{p_k}}(k)\mathcal{M}^{N_{p_k}}} \theta_{p_k}(s). \tag{18}$$

Using [25, Prop. 1], the optimum s_{p_k} is found by solving

$$(H_{p_k} + \lambda_k I)s_{p_k} = g_{p_k}. \tag{19}$$

Because H_{p_k} is positive semi-definite by construction, the operator $(H_{p_k} + \lambda_k I)$ is positive definite for any $\lambda_k > 0$, which implies the existence of a unique solution s_{p_k} to (19).

To help guarantee global convergence under bounded communication delays, we introduce a stepsize that scales all steps taken. We use γ_k to denote the stepsize used by robot p_k at iteration k, and then robot p_k's tentative update, denoted $X_{p_k}^{\mathrm{ten}}(s_{p_k})$, is computed as

$$X_{p_k}^{\mathrm{ten}}(s_{p_k}) = \mathrm{Retr}_{X_{p_k}(k)}(-\gamma_k s_{p_k}), \tag{20}$$

where s_{p_k} is from (19) and the retraction $\mathrm{Retr}_{X_{p_k}(k)} : \mathcal{T}_{X_{p_k}(k)}\mathcal{M}^{N_p} \to \mathcal{M}^{N_p}$ is defined to be the Riemannian exponential map in (15). This choice of retraction ensures that the update in (20) moves the updated trajectory estimate along a geodesic on the manifold $\mathcal{M}^{N_p}$. Specifically, for a trajectory $X_p \in \mathcal{M}^{N_p}$ and a tangent vector $s \in \mathcal{T}_{X_p}\mathcal{M}^{N_p}$, the retraction is given by

$$\mathrm{Retr}_{X_p}(s) \triangleq \mathrm{Exp}_{X_p}(s). \tag{21}$$

The goal of the step in (20) is for robot p_k's updated trajectory estimate $X_{p_k}(k+1)$ to produce a lower value of f_{p_k} than the prior trajectory estimate $X_{p_k}(k)$. Since s_{p_k} is computed in (18) by minimizing θ_{p_k}, robot p_k evaluates the extent to which the minimization of θ_{p_k} also provides a reduction in f_{p_k}. This evaluation is done by computing the gain ratio ρ_k via

$$\rho_k \triangleq \frac{f_{p_k}(D_{p_k}) - f_{p_k}(X_{p_k}^{\mathrm{ten}}(s_{p_k}), \hat{X}_{S(p_k)}(k))}{\frac{1}{2}(\theta_{p_k}(0) - \theta_{p_k}(-\gamma_k s_{p_k}))}, \tag{22}$$

with $X_{p_k}^{\text{ten}}(s_{p_k})$ from (20), which is equal to the reduction in f_{p_k} provided by executing (20) divided by the reduction in θ_{p_k} provided by taking that step. For a choice of threshold $\eta \in (0,1)$, if $\rho_k \geq \eta$, then the step taken in (20) is successful, so robot p_k accepts $X_{p_k}(k+1) = X_{p_k}^{\text{ten}}(s_{p_k})$. If $\rho_k < \eta$, then the step is unsuccessful, and the value of $X_{p_k}^{\text{ten}}(s_{p_k})$ from (20) is discarded. Then the value of λ_k is increased, which changes θ_{p_k}, and a new direction s_{p_k} is computed by solving (18) with the new θ_{p_k} that depends on the new value of λ_k. A new value of $X_{p_k}^{\text{ten}}(s_{p_k})$ is computed via (20) and used to compute a new value of ρ_k. This process of increasing λ_k is repeated as many times as necessary until a step is successful. Later in Theorem 1 we bound the maximum number of increases in λ_k that are needed until a step is successful.

D. Global View of Algorithm 1

For convergence analysis, we give a global view of the distributed asynchronous RLM algorithm. With identical onboard Poisson clock rates, each robot $p_k \in \mathcal{R}$ is selected via uniform random sampling at iteration k.

Algorithm 1 Distributed RLM (Global View for Analysis)

Require:
Initial iterate $\mathcal{X}(0) = \big(X_p(0)\big)_{p=1}^{R}$ given to all robots
RLM acceptance threshold $\eta \in (0,1)$
Damping parameters $\mu_{\min} > 0, \beta > 1$, set $\mu_0 = \mu_{\min}$
for $k = 0, 1, 2, \ldots$ **do**
  Select robot $p_k \in \mathcal{R}$ uniformly at random
  Compute f_{p_k}, g_{p_k}, H_{p_k} using (10), (28), and (30).
  $\mu_k \leftarrow \mu_0$
  while true **do** ▷ Inner loop: find acceptable step
    Compute λ_k via (17)
    Compute the search direction s_{p_k} using (19)
    Compute gain ratio ρ_k using (22)
    if $\rho_k \geq \eta$ **then** ▷ Accept
      $X_{p_k}(k+1) \leftarrow \mathrm{Retr}_{X_{p_k}(k)}(-\gamma_k s_{p_k})$
      break
    else ▷ Reject: increase damping
      $\mu_k \leftarrow \beta \mu_k$
    end if
  end while
  Carry over others: $\hat{X}_{S(p_k)}(k+1) \leftarrow \hat{X}_{S(p_k)}(k)$
end for

We emphasize that communications happen asynchronously. They are not written as part of the algorithm because they can happen at any time.

V. Convergence Analysis

This section analyze the convergence of Algorithm 1 by proving finite termination of the inner loop, monotonic decrease of the objective $\mathcal{F}$ from Problem 1, and a specific rate of convergence toward a stationary point of $\mathcal{F}$.

A. Technical Lemmas

Although $\mathcal{M}$ is not compact, its sublevel sets are.

Lemma 1 (Compact Sublevel Sets)**.** *Suppose Assumption 1 holds. The sublevel sets of $\mathcal{F}$ from Problem 1, defined as*

$$\mathcal{L}\left(\bar{\mathcal{X}}\right) \triangleq \left\{\mathcal{X} \in \mathcal{M}^{\mathcal{N}} \mid \mathcal{F}\left(\mathcal{X}\right) \leq \mathcal{F}\left(\bar{\mathcal{X}}\right)\right\} \tag{23}$$

for some fixed $\bar{\mathcal{X}} \in \mathcal{M}^{\mathcal{N}}$, are compact.

Proof. See Appendix D. ■

We use Lemma 1 to show that the RGN Hessian approximation is bounded over any sublevel set.

Lemma 2 (Bounded RGN Hessian Approximation)**.** *Suppose Assumption 1 holds. Fix $\bar{\mathcal{X}} \in \mathcal{M}^{\mathcal{N}}$, and let $\mathcal{L}(\bar{\mathcal{X}})$ be the associated sublevel set of $\mathcal{F}$ from* (23)*. Consider a point in $\mathcal{L}(\bar{\mathcal{X}})$ of the form $\tilde{\mathcal{X}} = \big(\tilde{X}_1, \tilde{X}_2, \ldots, \tilde{X}_R\big)$. For each p, define $\big(\tilde{X}_p, \tilde{X}_{S(p)}\big) \triangleq \big(\tilde{X}_p, \{\tilde{X}_q\}_{q \in S(p)}\big)$. Then the matrix H_p defined in* (30) *is bounded over $\mathcal{L}(\bar{\mathcal{X}})$ in the sense that there exists a constant $M > 0$ such that $\|H_p(\tilde{X}_p, \tilde{X}_{S(p)})\| \leq M$ for all $p \in \mathcal{R}$ and all points $\big(\tilde{X}_p, \tilde{X}_{S(p)}\big)$ defined above.*

Proof. Follows from Appendix J-C in [22]. ■

Next we show the Euclidean gradient of f_p is Lipschitz.

Lemma 3 (Euclidean Gradient is Lipschitz Continuous)**.** *Fix any $\bar{\mathcal{X}} \in \mathcal{M}^{\mathcal{N}}$. Consider a point in $\mathcal{L}(\bar{\mathcal{X}})$ from* (23) *of the form $\tilde{\mathcal{X}} = \big(\tilde{X}_1, \tilde{X}_2, \ldots, \tilde{X}_R\big)$. For each p, define $\big(\tilde{X}_p, \tilde{X}_{S(p)}\big) \triangleq \big(\tilde{X}_p, \{\tilde{X}_q\}_{q \in S(p)}\big)$. Define the set*

$$\chi_p \triangleq \big\{\tilde{X}_p \in \mathcal{M}^{N_p} : \text{ there exist points } \tilde{X}_i \text{ for } i \in \mathcal{R}\backslash\{p\} \text{ such that } \big(\tilde{X}_1, \ldots, \tilde{X}_p, \ldots, \tilde{X}_R\big) \in \mathcal{L}(\bar{\mathcal{X}})\big\}.$$

Then there exists some $L_E > 0$ such that the Euclidean gradient of the local cost f_p with respect to its first argument, denoted $\nabla_{X_p} f_p(\cdot, \tilde{X}_{S(p)})$, is L_E-Lipschitz continuous on χ_p.

Proof. See Appendix D. ■

Similar to Lemma 3, we next establish that the Riemannian gradients of interest are Lipschitz.

Lemma 4 (Local Riemannian Gradient is Lipschitz Continuous)**.** *Suppose Assumption 1 holds. Let $\varphi_p(X_p) \triangleq f_p(X_p, X_{S(p)})$ be the local cost function of robot p with all neighbor poses in $X_{S(p)}$ held constant. On any compact subset $\mathcal{K} \subset \mathcal{M}^{N_p}$, the Riemannian gradient $\operatorname{grad} \varphi_p$ defined in* (28) *is L_g-Lipschitz continuous. That is, there exists a constant $L_g > 0$ such that for all $X_p, Y_p \in \mathcal{K}$*

$$\left\|\mathcal{P}_{X_p \to Y_p} \operatorname{grad} \varphi_p(X_p) - \operatorname{grad} \varphi_p(Y_p)\right\| \leq L_g \, d_{\mathcal{M}^{N_p}}(X_p, Y_p),$$

where $\mathcal{P}_{X_p \to Y_p}$ denotes the parallel transport operator and $d_{\mathcal{M}^{N_p}}(\cdot,\cdot)$ is the product manifold distance from (27)*.*

Proof. See Appendix D. ■

The final technical lemma establishes a Lipschitz-like condition for the retraction we use in Algorithm 1.

Lemma 5. *For* Retr_X *in* (21) *there exists* $\delta > 0$ *such that*

$$\|\mathrm{Retr}_X(\mathbf{s}) - X\| \leq \delta\|\mathbf{s}\|$$

for any $X \in \mathcal{M}^N$ *and* $\mathbf{s} \in \mathcal{T}_X\mathcal{M}^N$.

Proof. See Appendix D. ■

B. Global Convergence Theorem

The proof consists of three steps: (1) Establishing well-definedness of the RLM damping loop (lines 5-15of Algorithm 1), (2) Proving that costs decrease at each iteration, and (3) Deriving a global finite-time convergence rate.

1) Step 1: Well-Definedness of the RLM Damping Loop: We prove that the inner damping loop in Algorithm 1 always terminates in finitely many iterations under our assumptions.

Lemma 6 (Sufficient condition for acceptance)**.** *Suppose robot* $p_k \in \mathcal{R}$ *is selected to compute an update at iteration* k *of Algorithm 1. If* λ_k *satisfies*

$$(1-\eta)\lambda_k^2\gamma_k - \frac{L_g}{2}\lambda_k - \frac{L_g}{2}M \;\geq\; 0, \tag{24}$$

where M *is the Jacobian bound from Lemma 2, then the RLM acceptance ratio* ρ_k *from* (22) *satisfies* $\rho_k \geq \eta$. *In particular, it suffices to have* $\lambda_k \geq \kappa$, *where*

$$\kappa \triangleq \frac{1}{2(1-\eta)\gamma_k}\left(\frac{L_g}{2} + \sqrt{\frac{L_g^2}{4} + 2(1-\eta)\gamma_k L_g M}\right).$$

Proof. See Appendix D. ■

Now we show that the inner loop in Algorithm 1 converges in finitely many iterations.

Theorem 1 (Well-definedness of the damping loop)**.** *At iteration* k *of the outer loop of Algorithm 1, the inner damping loop in lines* 5-15*terminates in at most*

$$J_{\max} = \left\lceil \frac{1}{\log(\beta)} \log\left(\frac{\kappa}{2\mu_0 f_{p_k}(D_{p_k})}\right)\right\rceil$$

steps, where $\lceil\cdot\rceil$ *denotes the ceiling function,* μ_0 *is from line* 4 *of Algorithm 1, and* κ *is from Lemma 6.*

Proof. See Appendix E. ■

2) Step 2: Descent Property with Communication Delays: The inner loop of Algorithm 1 (Lines 5-15) ensures a decrease in the local cost $f_{p_k}(\cdot, \hat{X}_{S(p_k)})$ with outdated information by enforcing the condition $\rho_k \geq \eta$. The next theorem shows that, under a certain step size bound, this decrease using outdated information also guarantees a decrease in the *true* global cost function $\mathcal{F}$.

Theorem 2 (Cumulative Descent Property with Delays)**.** *Suppose Assumptions 1 and 2 hold. If the step size* γ_k *is chosen such that* $0 < \gamma_k < \min\left\{\frac{2\lambda_k}{(L_g+\Delta L_E\delta B)}, 1\right\}$, *then the total cost reduction over* K *iterations satisfies*

$$\mathcal{F}(\mathcal{X}(0)) - \mathcal{F}(\mathcal{X}(k)) \geq \sum_{k=0}^{K-1} \sigma_k \|s_{p_k}\|^2, \tag{25}$$

where $\sigma_k = \gamma_k\lambda_k - \gamma_k^2(\frac{L_g}{2} + \frac{\Delta L_E\delta B}{2}) > 0$.

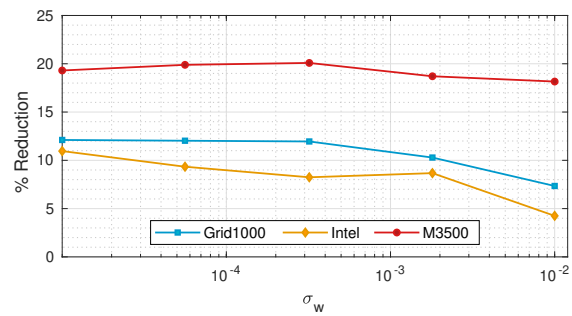

Fig. 2. Percent reduction in Lie-theoretic RPE for solutions computed by Algorithm 1 relative to Cartan-Sync and SE-Sync.

We define $\mathcal{X}(k) \triangleq \big(X_1(k), X_2(k), \ldots, X_R(k)\big) \in \mathcal{M}^{\mathcal{N}}$ as the collection of all robots' true trajectory estimates at iteration k. While robot p only has access to its local estimate $X_p(k)$ and outdated neighbor estimates $\hat{X}_{S(p)}(k)$, the global cost $\mathcal{F}$ is evaluated using $\mathcal{X}(k)$.

Proof. See Appendix F. ■

3) Step 3: Global Convergence Rate:

Theorem 3 (Finite-Time Global Convergence Rate)**.** *Suppose Assumptions 1 and 2 hold. If the step size* γ_k *is chosen as in Theorem 2, then Algorithm 1 converges to a first-order critical point of* $\mathcal{F}$ *with a global sublinear rate. Formally,*

$$\min_{k\in\{0,\ldots,K-1\}} \mathbb{E}\left[\|\operatorname{grad}\mathcal{F}(\mathcal{X}(k))\|^2\right] \leq \frac{\Upsilon R\mathcal{F}(\mathcal{X}(0))}{K\sigma_{\min}},$$

where $\operatorname{grad}\mathcal{F}(\mathcal{X}(k)) = \sum_{p=1}^{R}\operatorname{grad}f_p\left(X_p(k), X_{S(p)}(k)\right)$ *is the Riemannian gradient as in* (28), $\Upsilon \triangleq 2\zeta^2 + \frac{1}{2}(\Delta L_E\delta B)^2$, $\sigma_{\min} = \min_{k\in\{0,1,\ldots,K-1\}}\sigma_k > 0$, $\sigma_k \triangleq \gamma_k\lambda_k - \gamma_k^2(\frac{L_g}{2} + \frac{\Delta L_E\delta B}{2})$, R *is the number of robots, and the expectation is taken over the randomness in which robot updates at each iteration.*

Proof. See Appendix G. ■

VI. Simulation Results

In this section, we compare Algorithm 1 to state-of-the-art centralized solvers.

A. Simulation Setup and Noise Modeling

To evaluate the performance of Algorithm 1, we generated 15 pose graph optimization datasets by corrupting ground-truth edge measurements with the Lie-theoretic noise model defined in (7), thereby introducing anisotropic uncertainty. For each shared or unshared edge (i, j), the measurement noise covariance Σ_{ij} was sampled from a Wishart distribution [27] $W_d(V, n)$ with $d = 3$ and $n = 10$. The scale matrix was set to $V = \sigma_w\Sigma_w$, where $\Sigma_w \triangleq J_{3\times3} + \mathrm{diag}([u_1, u_2, u_3])$, $J_{3\times3}$ is a 3×3 matrix of ones, and each u_i is uniformly sampled from $(0, 1]$. By varying the noise scaling parameter σ_w between 10^{-5} and 10^{-2}, we produced random, positive-definite, and anisotropic covariance matrices with an expected value of $\mathbb{E}[\Sigma_{ij}] = 10\sigma_w\Sigma_w$.

TABLE I

VALUES OF RPE ACROSS STANDARD BENCHMARK PGO DATASETS

Dataset	Noise (σ_w)	Cartan-Sync		SE-Sync		**Algorithm 1**	
		RPE-L	RPE-E	RPE-L	RPE-E	**RPE-L**	**RPE-E**
Grid1000	$1.0 \cdot 10^{-5}$	0.0061	0.0123	0.0061	0.0123	**0.0054**	**0.0108**
	$5.6 \cdot 10^{-5}$	0.0147	0.0294	0.0147	0.0294	**0.0129**	**0.0259**
	$3.2 \cdot 10^{-4}$	0.0353	0.0707	0.0353	0.0707	**0.0311**	**0.0622**
	$1.8 \cdot 10^{-3}$	0.0792	0.1584	0.0792	0.1584	**0.0711**	**0.1421**
	$1.0 \cdot 10^{-2}$	0.1947	0.3885	0.1947	0.3885	**0.1804**	**0.3600**
Intel	$1.0 \cdot 10^{-5}$	0.0056	0.0112	0.0056	0.0112	**0.0049**	**0.0099**
	$5.6 \cdot 10^{-5}$	0.0131	0.0263	0.0131	0.0263	**0.0119**	**0.0238**
	$3.2 \cdot 10^{-4}$	0.0316	0.0632	0.0316	0.0632	**0.0290**	**0.0580**
	$1.8 \cdot 10^{-3}$	0.0740	0.1479	0.0740	0.1479	**0.0676**	**0.1351**
	$1.0 \cdot 10^{-2}$	0.1773	0.3537	0.1773	0.3537	**0.1697**	**0.3386**
M3500	$1.0 \cdot 10^{-5}$	0.0054	0.0108	0.0054	0.0108	**0.0043**	**0.0087**
	$5.6 \cdot 10^{-5}$	0.0131	0.0263	0.0131	0.0263	**0.0105**	**0.0211**
	$3.2 \cdot 10^{-4}$	0.0310	0.0621	0.0310	0.0621	**0.0248**	**0.0496**
	$1.8 \cdot 10^{-3}$	0.0729	0.1458	0.0729	0.1458	**0.0592**	**0.1185**
	$1.0 \cdot 10^{-2}$	0.1745	0.3484	0.1745	0.3484	**0.1428**	**0.2857**

This setup effectively simulates the complex relative pose uncertainties encountered in real-world robotics applications, resulting in an expected value of the Euclidean standard deviations between 7.26 mm to 22.9 cm for translation and 0.41° to 12.81° for rotation.

For consistency across all solvers, the first pose was anchored at the identity ($\mathbf{x}_1 \triangleq \mathbf{1}$), and although Algorithm 1 does not require a specific initialization rule, all methods were initialized using chordal initialization to ensure a fair comparison with SE-Sync and Cartan-Sync. All simulations were implemented in C++/ROS for three benchmark datasets: a synthesized Grid1000 dataset (1000 vertices, 1250 edges), the Intel dataset [28] (1729 vertices, 2512 edges), and the M3500 dataset [28] (3500 vertices, 5598 edges).

B. Evaluation Metrics

Solutions computed by each algorithm were evaluated using the root-mean-square relative pose error (RPE) metric, which quantifies the total geometric deformation of the final estimated pose $(\hat{\mathbf{x}}_i)_{i=1}^N$ relative to the ground truth $(\mathbf{x}_i^\diamond)_{i=1}^N$. The Lie-theoretic RPE (RPE-L) is defined as

$$\text{RPE-L} \triangleq \sqrt{\frac{1}{|\mathcal{E}|} \sum_{(i,j)\in\mathcal{E}} \left\| \log(\hat{\mathbf{z}}_{ij}^{-1} \boxplus \mathbf{z}_{ij}^\diamond) \right\|^2},$$

where $\hat{\mathbf{z}}_{ij} \triangleq \hat{\mathbf{x}}_i^{-1} \boxplus \hat{\mathbf{x}}_j$ and $\mathbf{z}_{ij}^\diamond \triangleq (\mathbf{x}_i^\diamond)^{-1} \boxplus \mathbf{x}_j^\diamond$. Furthermore, we define the Euclidean RPE (RPE-E) using the translational vectors $\hat{\mathbf{t}}_{ij}$ and rotational components $\hat{\theta}_{ij}$ of estimates as

$$\text{RPE-E} \triangleq \sqrt{\frac{1}{|\mathcal{E}|} \sum_{(i,j)\in\mathcal{E}} \left(\left\| \hat{\mathbf{t}}_{ij} - \mathbf{t}_{ij}^\diamond \right\|^2 + d(\hat{\theta}_{ij}, \theta_{ij}^\diamond)^2 \right)},$$

where $d(\theta_1, \theta_2)$ is the minimal angle between θ_1 and θ_2.

C. Benchmarking and Discussion

Algorithm 1 successfully converged to approximate stationary points across all 15 experimental. Resulting RPEs are given in Table I, with percent reductions relative to the baselines illustrated in Fig. 2. While SE-Sync and Cartan-Sync yielded nearly identical solutions, they displayed persistent estimation bias across the noise spectrum, likely due to their isotropic noise assumptions. Algorithm 1 produced lower RPE values across all datasets and noise levels.

On the Grid1000 dataset, Algorithm 1 showed a 7.34% to 12.11% reduction in RPE-L compared to Cartan-Sync and SE-Sync. On the Intel dataset, reductions ranged from 4.25% to 10.96%. Performance was most pronounced on the M3500 dataset, the study's largest graph, with an 18.16% to 19.31% reduction in RPE-L. We reiterate that although Algorithm 1 is both decentralized and asynchronous, it outperforms centralized solvers on PGO problems with anisotropic noise.

VII. CONCLUSION

We presented a distributed asynchronous Riemannian Levenberg-Marquardt algorithm for pose graph optimization on the planar unit dual quaternion manifold. We incorporated anisotropic measurement noise into this framework, and then proved that it converges to first-order critical points under bounded communication delays. Simulations showed that, on problems with anisotropic noise, our method achieves lower estimation error than state-of-the-art synchronous solvers. Future work will extend this framework to 3D pose graphs.

REFERENCES

[1] D. S. Drew, "Multi-agent systems for search and rescue applications," *Current Robotics Reports*, vol. 2, no. 2, pp. 189–200, 2021.

[2] F. Maresca, F. Devoti, G. Encinas-Lago, V. Sciancalepore, J. Paradells, and X. Costa-Perez, "Localization-driven multi-robot exploration for indoor search and rescue," *IEEE Open J. Commun. Soc.*, vol. 7, pp. 421–441, 2026.

[3] J.-P. de la Croix, F. Rossi, R. Brockers, D. Aguilar, K. Albee, E. Boroson, A. Cauligi, J. Delaune, R. Hewitt, D. Kogan *et al.*, "Multi-agent autonomy for space exploration on the cadre lunar technology demonstration," in *2024 IEEE Aerosp. Conf.* IEEE, 2024, pp. 1–14.

[4] C. Zheng, Y. Bao, and C. Wei, "Multi-robot autonomous cooperative exploration in unknown environment based on region assignment," in *Int. Symp. Rob. Intell. Manuf. Technol. (ISRIMT)*, 2024, pp. 119–123.

[5] C. Cadena, L. Carlone, H. Carrillo, Y. Latif, D. Scaramuzza, J. Neira, I. Reid, and J. J. Leonard, "Past, present, and future of simultaneous localization and mapping: Toward the robust-perception age," *IEEE Trans. Rob.*, vol. 32, no. 6, pp. 1309–1332, 2017.

[6] D. Zou, P. Tan, and W. Yu, "Collaborative visual slam for multiple agents: A brief survey," *Virtual Reality & Intelligent Hardware*, vol. 1, no. 5, pp. 461–482, 2019.

[7] K. He, R. Jia, H. Hong, N. Wang, and Y. Hu, "Ldg-cslam: Multi-robot collaborative slam based on curve analysis, normal distribution, and factor graph optimization," *J. Field Rob.*, vol. 42, no. 5, pp. 2173–2191, 2025.

[8] P. Schmuck and M. Chli, "Ccm-slam: Robust and efficient centralized collaborative monocular simultaneous localization and mapping for robotic teams," *J. Field Rob.*, vol. 36, no. 4, pp. 763–781, 2019.

[9] X. Zhao, S. Shao, T. Wang, C. Fang, J. Zhang, and H. Zhao, "A review of multi-robot collaborative simultaneous localization and mapping," in *Int. Conf. Unmann. Syst. (ICUS)*. IEEE, 2023, pp. 900–905.

[10] D. M. Rosen, L. Carlone, A. S. Bandeira, and J. J. Leonard, "Se-sync: A certifiably correct algorithm for synchronization over the special euclidean group," *Int. J. Rob. Res.*, vol. 38, no. 2-3, pp. 95–125, 2019.

[11] J. Briales and J. Gonzalez-Jimenez, "Cartan-sync: Fast and global se (d)-synchronization," *IEEE Rob. Autom. Lett.*, vol. 2, no. 4, pp. 2127–2134, 2017.

[12] T. Fan, H. Wang, M. Rubenstein, and T. Murphey, "Efficient and guaranteed planar pose graph optimization using the complex number representation," in *Int. Conf. Intell. Rob. Syst. (IROS)*. IEEE, 2019, pp. 1904–1911.

[13] S. Choudhary, L. Carlone, C. Nieto, J. Rogers, H. I. Christensen, and F. Dellaert, "Distributed trajectory estimation with privacy and communication constraints: a two-stage distributed gauss-seidel approach," in *Int. Conf. Rob. Autom. (ICRA)*. IEEE, May 2016, pp. 5261–5268.

[14] Y. Tian, A. Koppel, A. S. Bedi, and J. P. How, "Asynchronous and parallel distributed pose graph optimization," *IEEE Rob. Autom. Lett.*, vol. 5, no. 4, pp. 5819–5826, 2020.

[15] G. Guo and P. Yi, "An asynchronous parallel algorithm framework for decentralized pose graph optimization," in *2023 3rd Int. Conf. on Comput., Control and Rob. (ICCCR)*. IEEE, 2023, pp. 158–163.

[16] D. O. Wheeler, D. P. Koch, J. S. Jackson, T. W. McLain, and R. W. Beard, "Relative navigation: A keyframe-based approach for observable GPS-degraded navigation," *IEEE Control Syst. Mag.*, vol. 38, no. 4, pp. 30–48, 2018.

[17] D. McGann, K. Lassak, and M. Kaess, "Asynchronous distributed smoothing and mapping via on-manifold consensus admm," in *Int. Conf. Rob. Autom. (ICRA)*. IEEE, 2024, pp. 4577–4583.

[18] J. Bird, J. Blumenkamp, and A. Prorok, "Dvm-slam: Decentralized visual monocular simultaneous localization and mapping for multi-agent systems," in *Int. Conf. Rob. Autom. (ICRA)*. IEEE, 2025, pp. 1–7.

[19] T. Fan and T. Murphey, "Majorization minimization methods for distributed pose graph optimization with convergence guarantees," in *Int. Conf. Intell. Robots Syst. (IROS)*. IEEE, 2020, pp. 5058–5065.

[20] K. Li, J. Cox, B. Noack, and U. D. Hanebeck, "Improved pose graph optimization for planar motions using riemannian geometry on the manifold of dual quaternions," *IFAC-PapersOnLine*, vol. 53, no. 2, pp. 9541–9547, 2020.

[21] N. Boumal, *Introduction to Optimization on Smooth Manifolds*. Cambridge University Press, 2023.

[22] W. D. Warke, J. H. Ramos, P. Ganesh, K. M. Brink, and M. T. Hale, "Technical report: Pose graph optimization over planar unit dual quaternions: Improved accuracy with provably convergent riemannian optimization," *arXiv preprint arXiv:2404.00010*, 2024.

[23] A. W. Long, K. C. Wolfe, M. J. Mashner, G. S. Chirikjian *et al.*, "The banana distribution is gaussian: A localization study with exponential coordinates," *Rob.: Sci. Syst. VIII*, vol. 265, no. 1, 2013.

[24] T. Barfoot and P. Furgale, "Associating uncertainty with three-dimensional poses for use in estimation problems," *IEEE Trans. Rob.*, vol. 30, pp. 679–693, 06 2014.

[25] S. Adachi, T. Okuno, and A. Takeda, "Riemannian levenberg-marquardt method with global and local convergence properties," *arXiv preprint arXiv:2210.00253*, 2022.

[26] S. Boyd, A. Ghosh, B. Prabhakar, and D. Shah, "Randomized gossip algorithms," *IEEE Trans. Inf. Theory*, vol. 52, no. 6, pp. 2508–2530, 2006.

[27] C. Chatfield, *Introduction to Multivariate Analysis*. Routledge, 2018, cited in PUDQ PGO technical report for Wishart distribution property.

[28] L. Carlone and A. Censi, "From angular manifolds to the integer lattice: Guaranteed orientation estimation with application to pose graph optimization," *IEEE Trans. Rob.*, vol. 30, no. 2, pp. 475–492, 2014.

[29] C. Udriste, *Convex functions and optimization methods on Riemannian manifolds*. Springer Science & Business Media, 2013, vol. 297.

[30] E. Celledoni, S. Eidnes, B. Owren, and T. Ringholm, "Dissipative numerical schemes on riemannian manifolds with applications to gradient flows," *SIAM J. Sci. Comput.*, vol. 40, no. 6, pp. A3789–A3806, 2018.

[31] O. P. Ferreira, M. S. Louzeiro, and L. Prudente, "Gradient method for optimization on riemannian manifolds with lower bounded curvature," *SIAM Journal on Optimization*, vol. 29, no. 4, pp. 2517–2541, 2019.

[32] N. Boumal, P.-A. Absil, and C. Cartis, "Global rates of convergence for nonconvex optimization on manifolds," *IMA J. Numer. Anal.*, vol. 39, no. 1, pp. 1–33, 2019.

[33] R. A. Horn and C. R. Johnson, *Matrix Analysis*. Cambridge university press, 2012.

APPENDIX

A. Riemannian geometry of $\mathcal{M}$ and $\mathcal{M}^N$

Here, we briefly overview the Riemannian geometry involved with our formulation. Firstly, we embed $\mathcal{M}$ in the ambient Euclidean space $\mathbb{R}^4$ with the Euclidean norm; thus, $\mathcal{M}$ inherits the metric $\langle u, w\rangle_{\mathbf{x}} \triangleq u^\top w$ and norm $\|u\|_{\mathbf{x}} \triangleq \|u\|_2$ for all $\mathbf{x} \in \mathcal{M}$ and $u, w \in \mathcal{T}_{\mathbf{x}}\mathcal{M}$. The manifold $\mathcal{M}^N$ admits the metric $\langle \mathcal{U}, \mathcal{W}\rangle_X = \mathcal{U}^\top \mathcal{W}$, and norm $\|\mathcal{U}\|_X \triangleq \|\mathcal{U}\|_2$ for all $X \in \mathcal{M}^N$ and $\mathcal{U}, \mathcal{W} \in \mathcal{T}_X\mathcal{M}^N$.

Given two points $\mathbf{x}, \mathbf{y} \in \mathcal{M}$, the inverse of $\mathrm{Exp}_{\mathbf{x}}(\cdot)$ in (14) is the Riemannian logarithm map, given by

$$\mathrm{Log}_{\mathbf{x}}(\mathbf{y}) = \begin{bmatrix} \mathbf{x}_r \otimes \left[0, \psi\left(\mathbf{x}_r^{-1} \otimes \mathbf{y}_r\right)\right]^\top \\ \mathbf{y}_d - \mathbf{x}_d \end{bmatrix}. \tag{26}$$

Similarly, for any $X, Y \in \mathcal{M}^N$, we have $\mathrm{Log}_X(Y) = \mathrm{vec}\left((\mathrm{Log}_{\mathbf{x}_i}(\mathbf{y}_i))_{i=1}^N\right)$. Using (26), one can derive the geodesic distance, which measures the lengths of the shortest curves on $\mathcal{M}$ between points on $\mathcal{M}$. For $\mathbf{x}, \mathbf{y} \in \mathcal{M}$, it is given by $d_{\mathcal{M}}(\mathbf{x}, \mathbf{y}) = \|\mathrm{Log}_{\mathbf{x}}(\mathbf{y})\|$, with $\mathrm{Log}_{\mathbf{x}}(\cdot)$ from (26). The geodesic distance between $X \in \mathcal{M}^N$ and $Y \in \mathcal{M}^N$ is

$$d_{\mathcal{M}^N}(X, Y) = \sqrt{\sum_{i=1}^N d_{\mathcal{M}}(\mathbf{x}_i, \mathbf{y}_i)^2} = \sqrt{\sum_{i=1}^N \left\|\mathrm{Log}_{\mathbf{x}_i}(\mathbf{y}_i)\right\|^2}, \tag{27}$$

with $X = \mathrm{vec}((\mathbf{x}_i)_{i=1}^N)$, and $Y = \mathrm{vec}((\mathbf{y}_i)_{i=1}^N)$.

B. Riemannian gradient and Hessian approximation

In (16), $g_{p_k} \triangleq \mathrm{grad} f_{p_k}\left(X_{p_k}, X_{S(p_k)}\right)$ is the Riemannian gradient of f_{p_k} at X_{p_k}. Dropping the k subscript, it is computed as is the orthogonal projection of the Euclidean gradient, denoted $\bar{\partial} f_p$, onto $T_{X_p}\mathcal{M}^{N_p}$, i.e.,

$$\mathrm{grad} f_p\left(X_p, X_{S(p)}\right) = \mathcal{P}_{X_p} \bar{\partial} f_p\left(X_p, X_{S(p)}\right), \tag{28}$$

where $\mathcal{P}_{X_p} = \mathrm{diag}((\mathcal{P}_{\mathbf{x}_i^p})_{i=1}^{N_p})$, $\mathcal{P}_{\mathbf{x}_i^p} = I_4 - \tilde{P}\mathbf{x}_i^p(\mathbf{x}_i^p)^\top \tilde{P}$, $I_4 \in \mathbb{R}^{4\times 4}$ is an identity matrix, and $\tilde{P} \triangleq \mathrm{diag}(1, 1, 0, 0)$. The Euclidean gradient $\bar{\partial} f_p \triangleq \bar{\partial} f_p\left(X_p, X_{S(p)}\right)$ is given by

$$\bar{\partial} f_p = \sum_{(i,j)\in E_p^{\mathrm{un}}} \mathbf{g}_{ij}^p + \frac{1}{2} \sum_{q\in S(p)} \sum_{((a,i),(b,j))\in E_{pq}^{\mathrm{sh}}} \mathbf{g}_{ij}^{ab}, \tag{29}$$

where $\mathbf{g}_{ij}^p \triangleq \mathbf{g}_{ij}^p\left(\mathbf{x}_i^p, \mathbf{x}_j^p\right) = \mathrm{vec}((g_{ij,k}^p)_{k=1}^{N_p})$, with

$$g_{ij,k}^p = \begin{cases} \left(\mathcal{A}_{ij}^p\right)^\top \Omega_{ij} e_{ij}^p & i = k, \\ \left(\mathcal{B}_{ij}^p\right)^\top \Omega_{ij} e_{ij}^p & j = k, \\ \mathbf{0}_{4\times 1} & \text{otherwise}, \end{cases}$$

and $e_{ij}^p \triangleq e_{ij}\left(\mathbf{x}_i^p, \mathbf{x}_j^p\right)$, $\mathcal{A}_{ij}^p \triangleq \partial e_{ij}^p / \partial \mathbf{x}_i^p$, $\mathcal{B}_{ij}^p \triangleq \partial e_{ij}^p / \partial \mathbf{x}_j^p$. In (29), $\mathbf{g}_{ij}^{ab} \triangleq \mathbf{g}_{ij}^{ab}\left(\mathbf{x}_i^a, \mathbf{x}_j^b\right) = \mathrm{vec}((g_{ij,k}^{ab})_{k=1}^{N_p})$, where

$$g_{ij,k}^{ab} = \begin{cases} \left(\mathcal{A}_{ij}^{ab}\right)^\top \Omega_{ij}^{ab} e_{ij}^{ab} & a = p \text{ and } i = k, \\ \left(\mathcal{B}_{ij}^{ab}\right)^\top \Omega_{ij}^{ab} e_{ij}^{ab} & b = p \text{ and } j = k, \\ \mathbf{0}_{4\times 1} & \text{otherwise}, \end{cases}$$

where $e_{ij}^{ab} \triangleq e_{ij}\left(\mathbf{x}_i^a, \mathbf{x}_j^b\right)$, $\mathcal{A}_{ij}^{ab} \triangleq \partial e_{ij}^{ab} / \partial \mathbf{x}_i^a$, $\mathcal{B}_{ij}^{ab} \triangleq \partial e_{ij}^{ab} / \partial \mathbf{x}_j^b$. General forms for $\mathcal{A}_{ij}, \mathcal{B}_{ij}$ are derived in [22, Appendix H]. In (16), H_{p_k} approximates the Riemannian Hessian via

$$H_p\left(X_p, X_{S(p)}\right) = \mathcal{P}_{X_p} R_p\left(X_p, X_{S(p)}\right) \mathcal{P}_{X_p}, \tag{30}$$

with $\mathcal{P}_{X_p}$ as above, and $R_p \triangleq R_p\left(X_p, X_{S(p)}\right)$ defined as

$$R_p = \sum_{(i,j)\in E_p^{\mathrm{un}}} R_{ij}^p + \frac{1}{2} \sum_{q\in S(p)} \sum_{((a,i),(b,j))\in E_{pq}^{\mathrm{sh}}} R_{ij}^{ab},$$

where $R_{ij}^p \triangleq R_{ij}^p\left(\mathbf{x}_i^p, \mathbf{x}_j^p\right)$ and $R_{ij}^{ab} \triangleq R_{ij}^{ab}\left(\mathbf{x}_i^a, \mathbf{x}_j^b\right)$, with $R_{ij}^p, R_{ij}^{ab} \in \mathbb{R}^{4N_p \times 4N_p}$. Denoting block indices $\mathtt{i} \triangleq 4i+1 : 4i+4$ and $\mathtt{j} \triangleq 4j+1 : 4j+4$, R_{ij}^p has four nonzero blocks, which are given by $[R_{ij}^p]_{(\mathtt{i},\mathtt{i})} = (\mathcal{A}_{ij}^p)^\top \Omega_{ij} \mathcal{A}_{ij}^p$, $[R_{ij}^p]_{(\mathtt{i},\mathtt{j})} = [R_{ij}^p]_{(\mathtt{j},\mathtt{i})}^\top = (\mathcal{A}_{ij}^p)^\top \Omega_{ij} \mathcal{B}_{ij}^p$, and $[R_{ij}^p]_{(\mathtt{j},\mathtt{j})} = (\mathcal{B}_{ij}^p)^\top \Omega_{ij} \mathcal{B}_{ij}^p$, with $\mathcal{A}_{ij}^p, \mathcal{B}_{ij}^p$ defined as above. Furthermore, R_{ij}^{ab} has one nonzero block, which is either $[R_{ij}^{ab}]_{(\mathtt{i},\mathtt{i})} = (\mathcal{A}_{ij}^{ab})^\top \Omega_{ij}^{ab} \mathcal{A}_{ij}^{ab}$ if $a = p$, or $[R_{ij}^{ab}]_{(\mathtt{j},\mathtt{j})} = (\mathcal{B}_{ij}^{ab})^\top \Omega_{ij}^{ab} \mathcal{B}_{ij}^{ab}$ if $b = p$, with $\mathcal{A}_{ij}^{ab}, \mathcal{B}_{ij}^{ab}$ defined as above.

C. RLM Jacobians

For the definition of the distributed RLM algorithm we first require the computation of certain Jacobians associated with Problem 1. First we define weighted residuals. Let L_{ij} be the Cholesky factor of the information matrix Ω_{ij} in (9) such that $\Omega_{ij} = L_{ij}^\top L_{ij}$. We define the weighted residual blocks for robot p for unshared and shared edges, respectively, as

$$\tilde{r}_{ij}^{\mathrm{un}}(X_p) \triangleq L_{ij} e_{ij}(\mathbf{x}_i^p, \mathbf{x}_j^p), \text{ for all } (i,j) \in E_p^{\mathrm{un}}$$
$$\tilde{r}_{ij}^{\mathrm{sh}}(X_p, X_q) \triangleq L_{ij} e_{ij}(\mathbf{x}_i^a, \mathbf{x}_j^b), \text{ for all } ((a,i),(b,j)) \in E_{pq}^{\mathrm{sh}}$$

For a given pose graph $\mathcal{G}$, let $m_p = |E_p^{\mathrm{un}}|$ be the number of intra-robot edges belonging to robot p, and suppose they are numbered $(i_1, j_1), \ldots, (i_{m_p}, j_{m_p})$. Let $n_p = \sum_{q \in S(p)} |E_{pq}^{\mathrm{sh}}|$ be the number of inter-robot edges that connect robot p to another robot, and suppose they are numbered $(k_1, l_1), \ldots, (k_{n_p}, l_{n_p})$. Then the total number of edges incident to a pose of robot p is $e_p^{\mathrm{tot}} = m_p + n_p$. We define the map $F_p : \mathcal{M}^{N_p} \times \prod_{q \in S(p)} \mathcal{M}^{N_q} \to \mathbb{R}^{3e_p^{\mathrm{tot}}}$ as

$$F_p(X_p, X_{S(p)}) = \left[\begin{array}{c} \tilde{r}_{i_1 j_1}^{\mathrm{un}}(X_p) \\ \vdots \\ \tilde{r}_{i_{m_p} j_{m_p}}^{\mathrm{un}}(X_p) \\ \hline \frac{1}{\sqrt{2}} \tilde{r}_{k_1 l_1}^{\mathrm{sh}}(X_p, X_{S(p)}) \\ \vdots \\ \frac{1}{\sqrt{2}} \tilde{r}_{k_{n_p} l_{n_p}}^{\mathrm{sh}}(X_p, X_{S(p)}) \end{array}\right] \in \mathbb{R}^{3e_p^{\mathrm{tot}}}. \tag{31}$$

The local cost function for robot p may be written as

$$f_p(X_p, X_{S(p)}) = \frac{1}{2} \left\| F_p(X_p, X_{S(p)}) \right\|^2.$$

The Jacobian matrix

$$J_p = \frac{\partial F_p}{\partial X_p} \tag{32}$$

is a linear map from the tangent space $T_{X_p} \mathcal{M}^{N_p}$ to the residual space $\mathbb{R}^{3e_p^{\mathrm{tot}}}$. Formally, it is the matrix of partial derivatives of the residual vector F_p with respect to robot p's trajectory estimate $X_p \in \mathcal{M}^{N_p}$.

D. Technical Lemmas

Lemma 7 (Smoothness of Cost Function)**.** *The function $\mathcal{F}$ from Problem 1 and the local cost functions f_p for $p \in \mathcal{R}$ are continuously differentiable.*

Proof. The functions $\mathcal{F}$ and f_p for $p \in \mathcal{R}$ are sums of the terms h_p from (11) and $s_{p \leftrightarrow q}$ from (12). These functions are sums of squared weighted norms of the tangent residual function e_{ij} from (9). The function e_{ij} was shown to be continuously differentiable in Appendix H of [22], and hence the result follows. ■

Proof of Lemma 1. First, observe from (15) that for every $\mathcal{X} \in \mathcal{M}^{\mathcal{N}}$, $\mathrm{Exp}_{\mathcal{X}}$ is globally defined on $\mathcal{T}_{\mathcal{X}} \mathcal{M}^N$, which implies that $\mathcal{M}^{\mathcal{N}}$ is geodesically complete. Therefore, the Hopf-Rinow Theorem [29] implies that closed and bounded subsets of $\mathcal{M}^{\mathcal{N}}$ are compact, and it suffices to show that sublevel sets of the form of $\mathcal{L}\left(\bar{\mathcal{X}}\right)$ are closed and bounded.

From (10)-(13), $\mathcal{F}(\mathcal{X}) \geq 0$ for all $\mathcal{X} \in \mathcal{M}^{\mathcal{N}}$, which, given continuity of $\mathcal{F}$ from Lemma 7, implies that the sublevel sets of $\mathcal{F}$ are closed. Turning to boundedness of sublevel sets, (1) implies that $\mathcal{M}$ is unbounded, and therefore $\mathcal{M}^{\mathcal{N}}$ is unbounded. Then, by [30, Theorem 1], the sublevel set $\mathcal{L}\left(\bar{\mathcal{X}}\right)$ is bounded if and only if $\mathcal{F}$ is coercive, i.e., for all $\mathcal{Y} \in \mathcal{M}^{\mathcal{N}}$, every sequence $\{\mathcal{X}_l\}_{l \in \mathbb{N}} \subset \mathcal{M}^{\mathcal{N}}$ such that $\lim_{l \to \infty} d_{\mathcal{M}^{\mathcal{N}}}(\mathcal{X}_l, \mathcal{Y}) = \infty$ also satisfies $\lim_{l \to \infty} F(\mathcal{X}_l) = \infty$. Therefore, to complete the proof, it suffices to show that $\mathcal{F}$ is coercive, which we do next.

First, let $\mathcal{X}_l \triangleq \mathrm{vec}\left((\mathbf{x}_{lm}^p)_{(m,p) \in \mathcal{V}}\right)$ and $\mathcal{Y} \triangleq \mathrm{vec}\left((\mathbf{y}_m^p)_{(m,p) \in \mathcal{V}}\right)$, and observe from the definition of $d_{\mathcal{M}^{\mathcal{N}}}(\mathcal{X}_l, \mathcal{Y})$ in (27) that

$$\lim_{d_{\mathcal{M}^{\mathcal{N}}}(\mathcal{X}_l, \mathcal{Y}) \to \infty} \max_{(m,p) \in \mathcal{V}} \|\mathrm{Log}_{\mathbf{x}_{lm}^p}(\mathbf{y}_m^p)\|^2 = \infty.$$

Letting $\mathbf{x}_{lm}^p \triangleq [\mathbf{x}_{lm,r}^{p\top}, \mathbf{x}_{lm,d}^{p\top}]^\top$ and $\mathbf{y}_m^p \triangleq [\mathbf{y}_{m,r}^{p\top}, \mathbf{y}_{m,d}^{p\top}]^\top$, it holds from (26) that

$$\|\mathrm{Log}_{\mathbf{x}_{lm}^p}(\mathbf{y}_m^p)\|^2 = \psi\left((\mathbf{x}_{lm,r}^p)^{-1} \otimes \mathbf{y}_{m,r}^p\right)^2 + \|\mathbf{x}_{lm,d}^p - \mathbf{y}_{m,d}^p\|^2, \tag{33}$$

where ψ is from Section IV-A. Applying the fact that $\psi(\cdot) \leq \pi$ and using the triangle inequality in (33) yields

$$\|\mathrm{Log}_{\mathbf{x}_{lm}^p}(\mathbf{y}_m^p)\|^2 \leq \pi^2 + \|\mathbf{x}_{lm,d}^p\|^2 + \|\mathbf{y}_{m,d}^p\|^2,$$

which implies that

$$\lim_{\left\|\mathrm{Log}_{\mathbf{x}_{lm}^p}(\mathbf{y}_m^p)\right\|^2 \to \infty} \max_{(m,p) \in \mathcal{V}} \|\mathbf{x}_{lm,d}\|^2 = \infty.$$

Furthermore, applying the definition of $\log(\cdot)$ in (4) gives

$$\|\log(\mathbf{x}_{lm}^p)\|^2 = \phi^2(\mathbf{x}_{lm}^p) + \frac{1}{\mathrm{sinc}^2(\phi(\mathbf{x}_{lm}^p))} \|\mathbf{x}_{lm,d}^p\|^2, \tag{34}$$

with ϕ from Section II-B. Applying $\mathrm{sinc}^2(\cdot) \leq 1$ to (34) yields $\|\mathbf{x}_{lm,d}^p\|^2 \leq \|\log(\mathbf{x}_{lm}^p)\|^2$, and, therefore, $\lim_{\|\mathbf{x}_{lm,d}^p\|^2 \to \infty} \|\log(\mathbf{x}_{lm}^p)\|^2 = \infty$. For any $\mathbf{x}, \mathbf{y} \in \mathcal{M}$, we have

$$\begin{aligned} \|\log(\mathbf{x} \boxplus \mathbf{y})\|^2 &= \mathrm{sinc}(\mathbf{x} \boxplus \mathbf{y})^{-1} \mathbf{y}^\top M_L(\mathbf{x}) \mathbf{y} \\ &= \mathrm{sinc}(\mathbf{x} \boxplus \mathbf{y})^{-1} \mathbf{x}^\top M_R(\mathbf{y}) \mathbf{x}, \end{aligned}$$

where $M_L(\mathbf{x}) \triangleq Q_L(\mathbf{x})^\top \operatorname{diag}(0,1,1,1) Q_L(\mathbf{x})$ and $M_R(\mathbf{y}) \triangleq Q_R(\mathbf{y})^\top \operatorname{diag}(0,1,1,1) Q_R(\mathbf{y})$. Because $M_L(\cdot), M_R(\cdot) \succeq 0$, it holds that, for any $\mathbf{x}, \mathbf{y} \in \mathcal{M}$,

$$\lim_{\|\log(\mathbf{x} \boxplus \mathbf{y})\|^2 \to \infty} \max\left\{\|\log(\mathbf{x})\|^2, \|\log(\mathbf{y})\|^2\right\} = \infty. \quad (35)$$

We now observe that weak connectivity of $\mathcal{G}$ from Assumption 1 implies that, for any two poses $\mathbf{x}_i^p, \mathbf{x}_j^q \in \mathcal{M}$ such that $(p,i),(q,j) \in \mathcal{V}$, there exists a sequence of $L \geq 2$ weakly-connected vertices one can traverse from (p,i) to (q,j). Renumbering this sequence yields vertices $(v_1, \ldots, v_L) = ((p,i), \ldots, (q,j))$ and associated edges $\mathcal{E}_L \subset \mathcal{E}$, poses $(\mathbf{x}_1, \ldots, \mathbf{x}_L) = (\mathbf{x}_m^p, \ldots, \mathbf{x}_j^q)$, and measurements $\{\tilde{\mathbf{z}}_{lm}\}_{(v_l, v_m) \in \mathcal{E}_L}$. Then, any two neighboring poses $\mathbf{x}_l, \mathbf{x}_{l+1}$ (such that $l, l+1 \in [L]$) have the property that $\mathbf{x}_{l+1} = \mathbf{x}_l \boxplus \mathbf{c}_{l(l+1)}$, where

$$\mathbf{c}_{l(l+1)} \triangleq \begin{cases} \tilde{\mathbf{z}}_{l(l+1)} \boxplus \mathbf{r}_{l(l+1)} & \text{if } (v_l, v_{l+1}) \in \mathcal{E}_L \\ \mathbf{r}_{l(l+1)}^{-1} \boxplus \tilde{\mathbf{z}}_{l(l+1)}^{-1} & \text{otherwise,} \end{cases} \quad (36)$$

with $\mathbf{r}_{l(l+1)} \triangleq \tilde{\mathbf{z}}_{l(l+1)}^{-1} \boxplus \mathbf{x}_l^{-1} \boxplus \mathbf{x}_{l+1}$. Therefore, we can inductively write $\mathbf{x}_L = \mathbf{x}_1 \boxplus \mathbf{C}_{1L}$, where $\mathbf{C}_{1L} \triangleq \mathbf{c}_{12} \boxplus \ldots \boxplus \mathbf{c}_{(L-1)L}$. Per Section III-C, we have fixed $\mathbf{x}_a^r = \mathbf{1}$ for some $(r,a) \in \mathcal{V}$, so applying this process to the sequence $(1, \ldots, L) = ((r,a), \ldots, (p,m))$ yields $\mathbf{x}_{l,m}^p = \mathbf{x}_a^r \boxplus \mathbf{C}_{1L}$, with $\mathbf{C}_{1L}$ defined as above. Since $\log(\mathbf{x}^{-1}) = -\log(\mathbf{x})$, it holds that $\|\log(\mathbf{x}_{l,m}^p)\|^2 = \|\log(\mathbf{C}_{1L})\|^2$ for any $(p,m) \in \mathcal{V}$. Furthermore, because the $\tilde{\mathbf{z}}_{ij}$ terms in (36) are constant, applying (35) inductively yields, for any $(p,m) \in \mathcal{V}$,

$$\lim_{\|\log(\mathbf{x}_{l,m}^p)\|^2 \to \infty} \max_{((b,i),(c,j)) \in \mathcal{E}} \|\log(\mathbf{r}_{ij})\|^2 = \infty,$$

with $\mathbf{r}_{ij} \triangleq \tilde{\mathbf{z}}_{ij} \boxplus \mathbf{x}_i^b \boxplus \mathbf{x}_j^c$. From (10)-(12) and (13), $\lambda_{\min}(\Omega_{ij}) \|\log(\mathbf{r}_{ij})\|^2 \leq \mathcal{F}(\mathcal{X}_l)$, where $\lambda_{\min}(\cdot)$ is the minimum eigenvalue, and $\lambda_{\min}(\Omega_{ij}) > 0$ because $\Omega_{ij} = \Sigma_{ij}^{-1} \succ 0$. Therefore, $\lim_{\|\log(\mathbf{r}_{ij})\|^2 \to \infty} \mathcal{F}(\mathcal{X}_l) = \infty$, $\mathcal{F}$ is coercive, and the proof is complete.

Proof of Lemma 3. A function's Euclidean gradient is Lipschitz continuous if its Euclidean Hessian is bounded. Results in [22, Appendix I] derive analytical formulas for all Hessian tensors of the cost $\mathcal{F}$ from Problem 1, and results in [22, Appendix K] show that their Frobenius norms are bounded on any compact set. Then the Euclidean gradient of $\mathcal{F}$ is Lipschitz continuous, and the result follows because the gradient of f_p with respect to its first argument is Lipschitz with a constant no larger than that of the gradient of $\mathcal{F}$.

Proof of Lemma 4. By [31, Lemma 2], $\operatorname{grad} \varphi_p$ is L_g-Lipschitz if its Riemannian Hessian is bounded. The Riemannian Hessian of φ_p is bounded because $\operatorname{Hess} \varphi_p$ is a principal sub-matrix of the global Riemannian Hessian $\operatorname{Hess} \mathcal{F}$, which is proven to be bounded on compact sets in [22, Appendix G].

Proof of Lemma 5. Expanding the definition of Exp_X in (14) yields

$$\|\operatorname{Exp}_X(\mathbf{s}) - X\|^2 = \sum_{i=1}^N \|\operatorname{Exp}_{\mathbf{x}_i}(\mathbf{s}_i) - \mathbf{x}_i\|^2,$$

where $\mathbf{x}_i = [\mathbf{x}_{i,r}^\top, \mathbf{x}_{i,d}^\top]^\top \in \mathcal{M}$ and $\mathbf{s}_i = [\mathbf{s}_{i,r}^\top, \mathbf{s}_{i,d}^\top]^\top \in \mathcal{T}_{\mathbf{x}_i}\mathcal{M}$. Substituting the definition of $\operatorname{Exp}_{\mathbf{x}_i}$ from (14) gives

$$\begin{aligned} &\|\operatorname{Exp}_X(s) - X\|^2 \\ &= \sum_{i=1}^N \left(\|\mathbf{x}_{i,r} \otimes \psi^{-1}\left(\left(\mathbf{x}_{i,r}^{-1} \otimes s_{i,r}\right)_2\right) - \mathbf{x}_{i,r}\|^2 + \|\mathbf{s}_{d_i}\|^2 \right). \end{aligned} \quad (37)$$

Next, we observe that $\mathbf{x}_{i,r} \in S^1$ and $\mathbf{s}_{i,r} \in \mathcal{T}_{\mathbf{x}_{i,r}} S^1$, so that $\operatorname{Exp}_{\mathbf{x}_{r,i}}(\mathbf{s}_{i,r}) \triangleq \mathbf{x}_{i,r} \otimes \psi^{-1}\left(\left(\mathbf{x}_{i,r}^{-1} \otimes \mathbf{s}_{i,r}\right)_2\right)$ defines the exponential retraction on S^1 at the point $\mathbf{x}_{i,r}$. The manifold S^1 is compact and smooth; therefore, by [32, Equation (31)], there exists a constant $\delta_r > 0$ such that

$$\|\mathbf{x}_{i,r} \otimes \psi^{-1}\left(\left(\mathbf{x}_{i,r}^{-1} \otimes \mathbf{s}_{i,r}\right)_2\right) - \mathbf{x}_{i,r}\|^2 \leq \delta_r \|\mathbf{s}_{i,r}\|^2. \quad (38)$$

Substituting (38) into (37) yields

$$\begin{aligned} \|\operatorname{Exp}_X(\mathbf{s}) - X\|^2 &\leq \sum_{i=1}^N \left(\delta_r \|\mathbf{s}_{i,r}\|^2 + \|\mathbf{s}_{d_i}\|^2\right) \\ &\leq \sum_{i=1}^N \left(\max\{\delta_r, 1\}\left(\|\mathbf{s}_{i,r}\|^2 + \|\mathbf{s}_{d_i}\|^2\right)\right) \\ &= \sum_{i=1}^N (\max\{\delta_r, 1\} \|\mathbf{s}_i\|^2) \\ &= \max\{\delta_r, 1\} \sum_{i=1}^N \|\mathbf{s}_i\|^2 \\ &= \max\{\delta_r, 1\} \|\mathbf{s}\|^2 \end{aligned}$$

where the last equality holds because the squared norm of a tangent vector on the product manifold is the sum of the squared norms of its components. Taking the square root of both sides completes the proof.

Lemma 8 (Basic LM step bounds)**.** *Fix $p \in \mathcal{R}$, and suppose robot p has $(X_p, X_{S(p)})$ onboard. Define*

$$\begin{aligned} &J_p := J_p(X_p, X_{S(p)}), \\ &g_p := \operatorname{grad} f_p(X_p, X_{S(p)}), \quad H_p := J_p^\top J_p, \text{ and } \lambda > 0. \end{aligned}$$

Suppose s solves the Levenberg–Marquardt system

$$(H_p + \lambda I)s = g_p. \quad (39)$$

Then

$$\|g_p\|^2 \geq \lambda^2 \|s\|^2 \quad (40)$$

and

$$\langle g_p, s \rangle \geq \frac{\|g_p\|^2}{\|J_p\|^2 + \lambda}. \quad (41)$$

Proof. First, we prove (40). By (39),

$$\|g_p\|^2 = \big\langle (H_p + \lambda I)s,\ (H_p + \lambda I)s \big\rangle \qquad (42)$$
$$= \|H_p s\|^2 + 2\lambda \langle H_p s, s\rangle + \lambda^2 \|s\|^2.$$

We have $H_p = J_p^\top J_p \succeq 0$, and therefore

$$\langle H_p s,\ s\rangle = \langle J_p^* J_p s,\ s\rangle = \langle J_p s,\ J_p s\rangle = \|J_p s\|^2 \geq 0.$$

Therefore all three terms on the right-hand side of (42) are nonnegative, and we may write $\|g_p\|^2 \geq \lambda^2 \|s\|^2$, which proves (40). Next, we prove (41). Since $H_p := J_p^\top J_p \geq 0$ and $\lambda I > 0$, we know that $(H_p + \lambda I)$ is positive definite, hence it is invertible. Then $s = (H_p + \lambda I)^{-1} g_p$ solves (39), which implies that

$$\langle g_p, s\rangle = \big\langle g_p,\ (H_p + \lambda I)^{-1} g_p \big\rangle \geq \frac{\|g_p\|^2}{\|H_p + \lambda I\|} = \frac{\|g_p\|^2}{\|J_p\|^2 + \lambda},$$

where we have used the eigenvalue bound for positive definite matrices from [33, Thereom 4.2.2] that shows $\langle u, A^{-1} u\rangle \geq \|u\|^2 / \|A\|$ for $A \succ 0$, and the facts that $\|H_p + \lambda I\| = \|H_p\| + \lambda$ and $\|H_p\| = \|J_p^\top J_p\| = \|J_p\|^2$. ■

Lemma 9 (Lipschitz-type Bound for the Pullback)**.** *Suppose Assumption 1 holds. Fix $p \in \mathcal{R}$. Fix $\bar{\mathcal{X}} \in \mathcal{M}^{\mathcal{N}}$, and let $\mathcal{L}(\bar{\mathcal{X}})$ be the associated sublevel set of $\mathcal{F}$ from* (23)*. Consider a point in $\mathcal{L}(\bar{\mathcal{X}})$ of the form $\tilde{\mathcal{X}} = \big(\tilde{X}_1, \tilde{X}_2, \ldots, \tilde{X}_R\big)$. For each p, define $\big(\tilde{X}_p, \tilde{X}_{S(p)}\big) := \big(\tilde{X}_p, \{\tilde{X}_q\}_{q \in S(p)}\big)$. Let $\varphi_p(\tilde{X}_p) \triangleq f_p(\tilde{X}_p, \tilde{X}_{S(p)})$ be robot p's local cost with its neighbors' poses in $\tilde{X}_{S(p)}$ held constant. Suppose s solves* (19) *for a point of the form $(\tilde{X}_p, \tilde{X}_{S(p)})$, and define the pullback of φ_p at $\tilde{X}_p$ as*

$$\hat{\varphi}_p(s) \triangleq \varphi_p\big(\mathrm{Retr}_{\tilde{X}_p}(-s)\big) \quad \textit{for } s \in T_{\tilde{X}_p}\mathcal{M}^{N_p},$$

where $\mathrm{Retr}_{\tilde{X}_p}$ is from (21) *and $T_{\tilde{X}_p}\mathcal{M}^{N_p}$ is from* (2)*. Then there exists $L_g > 0$ such that*

$$\big|\, \hat{\varphi}_p(-s) - \big[\varphi_p(\tilde{X}_p) + \langle \mathrm{grad}\ \varphi_p(\tilde{X}_p), -s\rangle\big] \,\big| \ \leq\ \frac{L_g}{2}\, \|s\|^2. \qquad (43)$$

Proof. The sublevel set $\mathcal{L}(\bar{\mathcal{X}})$ is compact by Lemma 1. For the choice of λ in line 8 of Algorithm 1, at any $(\tilde{X}_p, \tilde{X}_{S(p)})$, Lemma 8 gives

$$\|s\|^2 \leq \frac{\|\mathrm{grad}\, \varphi_p(\tilde{X}_p)\|^2}{\mu_0^2 \|F_p(\tilde{X}_p, \tilde{X}_{S(p)})\|^2},$$

where the right-hand side is continuous in $\tilde{X}_p$ and non-negative because both F_p and $\mathrm{grad}\, \varphi_p$ are continuous in $\tilde{X}_p$ and $\|\cdot\|$ is continuous and non-negative. The function φ_p is twice continuously differentiable by [22, Appendix I]. Then the result follows from Lemma 10.57 in [21]. ■

Lemma 10 (Predicted reduction upper bound)**.** *Here, we use the equivalent definition of the local Riemannian gradient*

$$g_{p_k}\big(X_{p_k}(k), \hat{X}_{S(p_k)}\big) = J_p(D_{p_k})^\top F_{p_k}(D_{p_k}) \qquad (44)$$

and the definition of Riemannian Gauss-Newton (RGN) Hessian approximation H_{p_k}

$$H_{p_k}(X_{p_k}, \hat{X}_{S(p_k)}) \triangleq J_{p_k}(D_{p_k})^\top J_{p_k}(D_{p_k}).$$

Suppose robot p_k has $(X_{p_k}, \hat{X}_{S(p_k)})$ onboard at iteration k of Algorithm 1, and consider the quadratic model θ_{p_k} defined in (16)*. Then, for all $s \in T_{X_{p_k}}\mathcal{M}^{N_{p_k}}$,*

$$\frac{1}{2}(\theta_{p_k}(0) - \theta_{p_k}(-s)) = \langle g_{p_k}, s\rangle - \frac{1}{2}\|J_{p_k} s\|^2 - \frac{\lambda}{2}\|s\|^2 \leq \langle g_{p_k}, s\rangle,$$

where $F_{p_k} := F_{p_k}(X_{p_k}, \hat{X}_{S(p_k)})$ is from (31)*, $J_{p_k} := J_{p_k}(X_{p_k}, \hat{X}_{S(p_k)})$ is from* (32)*, and $g_{p_k} := g_{p_k}(X_{p_k}, \hat{X}_{S(p_k)})$ is from* (44)*.*

Proof. By definition,

$$\theta_{p_k}(0) = \|F_{p_k}\|^2 \quad \text{and} \quad \theta_{p_k}(-s) = \|F_{p_k} - J_{p_k} s\|^2 + \lambda \|s\|^2.$$

Hence

$$\frac{1}{2}\big(\theta_{p_k}(0) - \theta_{p_k}(-s)\big) = \frac{1}{2}\Big(\|F_{p_k}\|^2 - \|F_{p_k} - J_{p_k} s\|^2 - \lambda \|s\|^2\Big). \qquad (45)$$

Expand the square using the Euclidean inner product in $\mathbb{R}^m$ gives

$$\|F_{p_k} - J_{p_k} s\|^2 = \|F_{p_k}\|^2 - 2\langle F_{p_k}, J_{p_k} s\rangle + \|J_{p_k} s\|^2.$$

Substituting this expansion into (45) gives

$$\frac{1}{2}\big(\theta_{p_k}(0) - \theta_{p_k}(-s)\big) = \frac{1}{2}\Big(\|F_{p_k}\|^2 - \|F_{p_k}\|^2 + 2\langle F_{p_k}, J_{p_k} s\rangle - \|J_{p_k} s\|^2 - \lambda_k \|s\|^2\Big) = \langle F_{p_k}, J_{p_k} s\rangle - \frac{1}{2}\|J_{p_k} s\|^2 - \frac{\lambda}{2}\|s\|^2.$$

We then apply the definition of the adjoint operator $J_{p_k}^*$ to find

$$\langle F_{p_k}, J_{p_k} s\rangle = \langle J_{p_k}^* F_{p_k}, s\rangle = \langle g_{p_k}, s\rangle.$$

Therefore

$$\frac{1}{2}\big(\theta_{p_k}(0) - \theta_{p_k}(-s)\big) = \langle g_{p_k}, s\rangle - \frac{1}{2}\|J_{p_k} s\|^2 - \frac{\lambda}{2}\|s\|^2.$$

Finally, since $\|J_{p_k} s\|^2 \geq 0$ and $\lambda \|s\|^2 \geq 0$, we obtain the upper bound

$$\frac{1}{2}\big(\theta_{p_k}(0) - \theta_{p_k}(-s)\big) \leq \langle g_{p_k}, s\rangle.$$

■

Lemma 11 (Actual reduction lower bound via pullback)**.** *Suppose Assumption 1 holds. Let φ_{p_k} and $\hat{\varphi}_{p_k}$ be the local cost function and its pullback to the tangent space defined as in Lemma 9, respectively. The actual reduction in the local cost f_{p_k} achieved at Line 12 of Algorithm 1 is defined as $\mathrm{Actual}(-s) := \varphi_{p_k}(X_{p_k}) - \hat{\varphi}_{p_k}(-s)$. Suppose X_{p_k} and $\mathrm{Retr}_{X_{p_k}}(-s)$ are both in the sublevel set $\mathcal{L}(\bar{\mathcal{X}})$ for some $\bar{\mathcal{X}}$. Then, for any tangent vector $s \in T_{X_{p_k}}\mathcal{M}^{N_{p_k}}$, the actual reduction satisfies*

$$\mathrm{Actual}(-s) \ \geq\ \langle g_{p_k}, s\rangle - \frac{L_g}{2}\|s\|^2,$$

where $g_{p_k} := g_{p_k}(X_{p_k}, \hat{X}_{S(p_k)})$ is the local Riemannian gradient from (44) *and L_g is the Lipschitz constant of the Riemannian gradient on the compact sublevel set $\mathcal{L}(\bar{\mathcal{X}})$ defined in Lemma 4.*

Proof. We apply (43) to the tangent vector $-s$ to find

$$\left|\hat{\varphi}_{p_k}(-s) - \left[\varphi_{p_k}(X_{p_k}) + \langle g_{p_k}, -s\rangle\right]\right| \;\le\; \frac{L_g}{2}\|s\|^2.$$

Using $\langle g_{p_k}, -s\rangle = -\langle g_{p_k}, s\rangle$, this bound becomes

$$\left|\hat{\varphi}_{p_k}(-s) - \varphi_{p_k}(X_{p_k}) + \langle g_{p_k}, s\rangle\right| \;\le\; \frac{L_g}{2}\|s\|^2.$$

This absolute-value inequality yields two inequalities, namely

$$-\frac{L_g}{2}\|s\|^2 \;\le\; \hat{\varphi}_{p_k}(-s) - \varphi_{p_k}(X_{p_k}) + \langle g_{p_k}, s\rangle \;\le\; \frac{L_g}{2}\|s\|^2. \tag{46}$$

Now we upper bound $\hat{\varphi}_{p_k}(-s)$. Using the right-hand inequality in (46) and rearranging gives

$$\hat{\varphi}_{p_k}(-s) \;\le\; \varphi_{p_k}(X_{p_k}) - \langle g_{p_k}, s\rangle + \frac{L_g}{2}\|s\|^2.$$

Rearranging again to match the form of the actual reduction yields the lower bound

$$\varphi_{p_k}(X_{p_k}) - \hat{\varphi}_{p_k}(-s) \;\ge\; \langle g_{p_k}, s\rangle - \frac{L_g}{2}\|s\|^2.$$

■

Proof of Lemma 6. The acceptance ratio is defined in (22) as

$$\rho_k = \frac{\mathrm{Actual}(-\gamma_k s_{p_k})}{\mathrm{Predicted}(-\gamma_k s_{p_k})} = \frac{\varphi_{p_k}(X_{p_k}) - \varphi_{p_k}(\mathrm{Retr}_{X_{p_k}}(-\gamma_k s_{p_k}))}{\frac{1}{2}(\theta_{p_k}(0) - \theta_{p_k}(-\gamma_k s_{p_k}))}.$$

The condition $\rho_k \ge \eta$ is equivalent to having

$$\mathrm{Actual}(-\gamma_k s_{p_k}) - \eta \cdot \mathrm{Predicted}(-\gamma_k s_{p_k}) \ge 0.$$

From Lemma 11, we have a lower bound on the actual reduction, namely

$$\mathrm{Actual}(-\gamma_k s_{p_k}) \;\ge\; \langle g_{p_k}, \gamma_k s_{p_k}\rangle - \frac{L_g}{2}\|\gamma_k s_{p_k}\|^2, \tag{47}$$

where $g_{p_k} := g_{p_k}(X_{p_k}, \hat{X}_{S(p_k)})$.

From Lemma 10, we have an upper bound on the predicted reduction in the form of

$$\mathrm{Predicted}(-\gamma_k s_{p_k}) \le \langle g_{p_k}, \gamma_k s_{p_k}\rangle,$$

and multiplying by $-\eta$ gives

$$-\eta \cdot \mathrm{Predicted}(-\gamma_k s_{p_k}) \ge -\eta\langle g_{p_k}, \gamma_k s_{p_k}\rangle. \tag{48}$$

Adding (47) and (48), we find a lower bound for the acceptance condition as

$$\begin{aligned}\mathrm{Actual}(-\gamma_k s_{p_k}) &- \eta \cdot \mathrm{Predicted}(-\gamma_k s_{p_k}) \\ &\ge \left(\langle g_{p_k}, \gamma_k s_{p_k}\rangle - \frac{L_g}{2}\|\gamma_k s_{p_k}\|^2\right) - \eta\langle g_{p_k}, \gamma_k s_{p_k}\rangle \\ &= (1-\eta)\langle g_{p_k}, \gamma_k s_{p_k}\rangle - \frac{L_g}{2}\|\gamma_k s_{p_k}\|^2. \end{aligned}\tag{49}$$

Next, we use the properties of the LM step s_{p_k} from Lemma 8, namely that

$$\langle g_{p_k}, \gamma_k s_{p_k}\rangle \ge \gamma_k \frac{\|g_{p_k}\|^2}{\|J_{p_k}\|^2 + \lambda_k}, \tag{50}$$

where $J_{p_k} \triangleq J_{p_k}(X_{p_k}(k), \hat{X}_{S(p_k)}(k))$ is the local Riemannian Jacobian defined in (32), and that

$$\gamma_k^2\|s_{p_k}\|^2 \le \frac{\|g_{p_k}\|^2}{\lambda_k^2}, \tag{51}$$

which follows from (40).

We substitute (50) and (51) into (49) to find

$$\begin{aligned}(1-\eta)&\langle g_{p_k}, \gamma_k s_{p_k}\rangle - \frac{L_g}{2}\|\gamma_k s_{p_k}\|^2 \\ &\ge (1-\eta)\gamma_k\left(\frac{\|g_{p_k}\|^2}{\|J_{p_k}\|^2 + \lambda_k}\right) - \frac{L_g}{2}\left(\frac{\|g_{p_k}\|^2}{\lambda_k^2}\right). \end{aligned}\tag{52}$$

Using Lemma 2, we know $\|J_{p_k}\|^2 \le M$. Then

$$\frac{1}{\|J_{p_k}\|^2 + \lambda_k} \ge \frac{1}{M + \lambda_k}. \tag{53}$$

Substituting (53)) into (52) gives

$$\begin{aligned}(1-\eta)\gamma_k&\left(\frac{\|g_{p_k}\|^2}{\|J_{p_k}\|^2 + \lambda_k}\right) - \frac{L_g}{2}\left(\frac{\|g_{p_k}\|^2}{\lambda_k^2}\right) \\ &\ge (1-\eta)\gamma_k\left(\frac{\|g_{p_k}\|^2}{M + \lambda_k}\right) - \frac{L_g}{2}\left(\frac{\|g_{p_k}\|^2}{\lambda_k^2}\right) \\ &= \|g_{p_k}\|^2\left[\frac{\gamma_k(1-\eta)}{M+\lambda_k} - \frac{L_g}{2\lambda_k^2}\right].\end{aligned}$$

The step is successful, i.e., $\rho_k \ge \eta$, if the entire expression is non-negative. Since $\|g_{p_k}\|^2 \ge 0$, we only need to ensure that

$$\frac{\gamma_k(1-\eta)}{M+\lambda_k} - \frac{L_g}{2\lambda_k^2} \ge 0,$$

which holds if and only if

$$\frac{\gamma_k(1-\eta)}{M+\lambda_k} \ge \frac{L_g}{2\lambda_k^2}.$$

Solving for λ_k we recovers the condition in (24).

Now we need to show that if $\lambda_k \ge \kappa$, then the inequality (24) holds. Let $P(\lambda_k) = (1-\eta)\lambda_k^2\gamma_k - \frac{L_g}{2}\lambda_k - \frac{L_g}{2}M$. Since $\eta \in (0,1)$, the coefficient of λ_k^2 is positive, and $P(\lambda_k)$ is an upward-opening parabola. This means $P(\lambda_k) \ge 0$ for all λ_k greater than or equal to the largest root of $P(\lambda_k)$. The roots of $P(\lambda_k) = 0$ are

$$\lambda_k = \frac{\frac{L_g}{2} \pm \sqrt{\frac{L_g^2}{4} + 2(1-\eta)\gamma_k L_g M}}{2(1-\eta)\gamma_k}.$$

Since all terms in the square root are positive, the discriminant is real and positive. The largest root is

$$\kappa = \frac{\frac{L_g}{2} + \sqrt{\frac{L_g^2}{4} + 2(1-\eta)\gamma_k L_g M}}{2(1-\eta)\gamma_k}.$$

Therefore, if $\lambda_k \ge \kappa$, the condition (24) is satisfied.

Lemma 12 (Damped Hessian Operator Bounds)**.** *Suppose Assumption 1 holds. Fix $\bar{\mathcal{X}} \in \mathcal{M}^{\mathcal{N}}$, and let $\mathcal{L}(\bar{\mathcal{X}}) := \{\mathcal{X} \in \mathcal{M}^{\mathcal{N}} \mid \mathcal{F}(\mathcal{X}) \leq \mathcal{F}(\bar{\mathcal{X}})\}$ be the associated sublevel set of the cost $\mathcal{F}$ from Problem 1. Let H_{p_k} denote the RGN Hessian approximation at the kth iteration of Algorithm 1, which is calculated in line 5 as $H_{p_k} = J_p(X_{p_k}, \hat{X}_{S(p_k)})^\top J_p(X_{p_k}, \hat{X}_{S(p_k)})$. Consider a point in $\mathcal{L}(\bar{\mathcal{X}})$ of the form $\tilde{\mathcal{X}} = \big(\tilde{X}_1, \tilde{X}_2, \ldots, \tilde{X}_R\big)$. For each p, define $\big(\tilde{X}_p, \tilde{X}_{S(p)}\big) \triangleq \big(\tilde{X}_p, \{\tilde{X}_q\}_{q\in S(p)}\big)$. Let $\lambda_k \geq 0$ be computed as in (17). Then for any tangent vector $s \in T_{X_{p_k}}\mathcal{M}^{N_p}$ we have $\|H_{p_k} + \lambda_k I\| \leq \zeta$ and $\langle s, (H_{p_k} + \lambda_k I)s\rangle \leq \zeta^2\|s\|^2$, where $\zeta := M + \beta\kappa$, M is from (**??**), β is from Algorithm 1, and κ is from Lemma 6.*

Proof. The operator norm of the damped Hessian $H_{p_k} + \lambda_k I$ can be bounded with the triangle inequality via

$$\|H_p(X_p, \hat{X}_{S(p)}) + \lambda_k I\| \leq \|H_p(X_p, \hat{X}_{S(p)})\| + \|\lambda_k I\|.$$

Lemma 2 shows that the Jacobian J_p is bounded on the compact sublevel set $\mathcal{L}(\bar{\mathcal{X}})$ by a constant M. Therefore, the RGN Hessian is bounded on $\mathcal{L}(\bar{\mathcal{X}})$ via

$$\|H_{p_k}\| \leq \|J_p(X_{p_k}, \hat{X}_{S(p_k)})^\top\|\|J_p(X_{p_k}, \hat{X}_{S(p_k)})\| \leq M.$$

At every iteration k, Algorithm 1 uses a damping parameter λ_k that satisfies $\lambda_k \leq \beta\kappa$. Then $\|H_{p_k} + \lambda_k I\| \leq M + \beta\kappa$. ■

Lemma 13 (Delayed Gradient difference bound)**.** *Suppose Assumption 2 holds. Let $\hat{g}_k \triangleq \mathrm{grad}_{X_{p_k}} f_{p_k}(X_{p_k}(k), \hat{X}_{S(p_k)}(k))$ be the local gradient that is computed by robot p_k in line 4 of iteration k of Algorithm 1. Let $g_k = \mathrm{grad}_{X_{p_k}} f_{p_k}(X_{p_k}(k), X_{S(p_k)}(k))$ be what robot p_k would compute in line 4 of iteration k of Algorithm 1 if it had the most up-to-date shared pose estimates from each of its neighbors. Then*

$$\|g_k - \hat{g}_k\| \leq \frac{\Delta}{2} L_E \delta_{max}\ \gamma_k \sum_{k'=k-B}^{k-1} \|s(k')\|,$$

where $\delta_{\max} > 0$ is a constant, $s(k') = (0, \ldots, s_{p_{k'}}, \ldots, 0)$ and $p_{k'}$ is the index of the robot that performs an update at iteration k', is the search direction used in line 12 of Algorithm 1 at iteration k'.

Proof. We know from (10) that the local cost with up-to-date neighbor info $X_{S(p_k)}(k)$ is

$$\begin{aligned} &f_{p_k}(X_{p_k}(k), X_{S(p_k)}(k)) \\ &\quad = h_{p_k}(X_{p_k}(k)) + \frac{1}{2}\sum_{q\in S(p_k)} s_{p_k\leftrightarrow q}\big(X_{p_k}(k), X_q(k)\big), \end{aligned}$$

and the local cost using outdated neighbor info $\hat{X}_{S(p_k)}(k)$ is

$$\begin{aligned} &f_{p_k}(X_{p_k}(k), \hat{X}_{S(p_k)}(k)) \\ &\quad = h_{p_k}(X_{p_k}(k)) + \frac{1}{2}\sum_{q\in S(p_k)} s_{p_k\leftrightarrow q}\big(X_{p_k}(k), \hat{X}_q^p(k)\big). \end{aligned}$$

Here $\hat{X}_q^p(k) = X_q(\ell_q^p(k))$ is the outdated trajectory that robot p has for neighbor $q \in S(p_k)$ at iteration k. The Riemannian gradient with respect to X_{p_k} evaluated with up-to-date information is

$$\begin{aligned} g_k &= \mathrm{grad}_{X_{p_k}} f_{p_k}(X_{p_k}(k), X_{S(p_k)}(k)) \\ &= \mathrm{grad}_{X_{p_k}} h_{p_k}(X_{p_k}(k)) \\ &\quad + \frac{1}{2}\sum_{q\in S(p_k)} \mathrm{grad}_{X_{p_k}} s_{p_k\leftrightarrow q}\big(X_{p_k}(k), X_q(k)\big), \end{aligned} \tag{54}$$

and the Riemannian gradient computed by robot p_k with outdated information is

$$\begin{aligned} \hat{g}_k &= \mathrm{grad}_{X_{p_k}} f_{p_k}(X_{p_k}(k), \hat{X}_{S(p_k)}(k)) \\ &= \mathrm{grad}_{X_{p_k}} h_{p_k}(X_{p_k}(k)) \\ &\quad + \frac{1}{2}\sum_{q\in S(p_k)} \mathrm{grad}_{X_{p_k}} s_{p_k\leftrightarrow q}\big(X_{p_k}(k), \hat{X}_q^p(k)\big). \end{aligned} \tag{55}$$

Using (54) and (55) to compute $\|g_k - \hat{g}_k\|$ gives

$$\begin{aligned} \|g_k - \hat{g}_k\| &= \Bigg\|\frac{1}{2}\sum_{q\in S(p_k)}\Big[\mathrm{grad}_{X_{p_k}} s_{p_k\leftrightarrow q}(X_{p_k}(k), X_q(k)) \\ &\qquad - \mathrm{grad}_{X_{p_k}} s_{p_k\leftrightarrow q}(X_{p_k}(k), \hat{X}_q^p(k))\Big]\Bigg\| \\ &\leq \frac{1}{2}\sum_{q\in S(p_k)} \big\|\mathrm{grad}_{X_{p_k}} s_{p_k\leftrightarrow q}(X_{p_k}(k), X_q(k)) \\ &\qquad - \mathrm{grad}_{X_{p_k}} s_{p_k\leftrightarrow q}(X_{p_k}(k), \hat{X}_q^p(k))\big\|. \end{aligned} \tag{56}$$

To bound each term, we use the fact that the Riemannian gradient with respect to X_{p_k} is the orthogonal projection of the Euclidean gradient onto the tangent space $T_{X_{p_k}(k)}\mathcal{M}^{N_p}$, namely

$$\begin{aligned} &\mathrm{grad}_{X_{p_k}} s_{p_k\leftrightarrow q}\big(X_{p_k}(k), X_q(k)\big) \\ &\qquad = \mathcal{P}_{X_{p_k}(k)}\nabla_{X_{p_k}} s_{p_k\leftrightarrow q}\big(X_{p_k}(k), X_q(k)\big) \end{aligned} \tag{57}$$

and

$$\begin{aligned} &\mathrm{grad}_{X_{p_k}} s_{p_k\leftrightarrow q}\big(X_{p_k}(k), \hat{X}_q^p(k)\big) \\ &\qquad = \mathcal{P}_{X_{p_k}(k)}\nabla_{X_{p_k}} s_{p_k\leftrightarrow q}\big(X_{p_k}(k), \hat{X}_q^p(k)\big), \end{aligned} \tag{58}$$

where $\mathcal{P}_{X_{p_k}(k)}$ is from (**??**).

We apply (57) and (58) on the right hand side of (56) to reach

$$\begin{aligned} &\Big\|\mathrm{grad}_{X_{p_k}} s_{p_k\leftrightarrow q}(X_{p_k}(k), X_q(k)) \\ &\qquad - \mathrm{grad}_{X_{p_k}} s_{p_k\leftrightarrow q}(X_{p_k}(k), \hat{X}_q^p(k))\Big\| \\ &\qquad = \Big\|\mathcal{P}_{X_{p_k}(k)}\nabla_{X_{p_k}} s_{p_k\leftrightarrow q}(X_{p_k}(k), X_q(k)) \\ &\qquad\quad - \mathcal{P}_{X_{p_k}(k)}\nabla_{X_{p_k}} s_{p_k\leftrightarrow q}(X_{p_k}(k), \hat{X}_q^p(k))\Big\|. \end{aligned}$$

Furthermore, since the orthogonal projection operation is a non-expansive mapping, we have

$$\begin{aligned}&\Big\|\mathcal{P}_{X_{p_k}(k)}\nabla_{X_{p_k}} s_{p_k\leftrightarrow q}(X_{p_k}(k), X_q(k))\\&\quad - \mathcal{P}_{X_{p_k}(k)}\nabla_{X_{p_k}} s_{p_k\leftrightarrow q}(X_{p_k}(k), \hat{X}_q^p(k))\Big\|\\&\leq \Big\|\nabla_{X_{p_k}} s_{p_k\leftrightarrow q}(X_{p_k}(k), X_q(k))\\&\quad - \nabla_{X_{p_k}} s_{p_k\leftrightarrow q}(X_{p_k}(k), \hat{X}_q^p(k))\Big\|.\end{aligned}$$

From Lemma 3 the Euclidean gradient of the local cost f_{p_k} is L_E-Lipschitz. Since f_{p_k} is the sum of h_{p_k} and $s_{p_k\leftrightarrow q}$, each term of the form $\nabla_{X_{p_k}} s_{p_k\leftrightarrow q}$ must also be Lipschitz continuous with a constant no greater than L_E. We thus have

$$\begin{aligned}&\Big\|\mathrm{grad}_{X_{p_k}}\, s_{p_k\leftrightarrow q}(X_{p_k}(k), X_q(k))\\&\quad - \mathrm{grad}_{X_{p_k}}\, s_{p_k\leftrightarrow q}(X_{p_k}(k), \hat{X}_q^p(k))\Big\|\\&\leq \Big\|\nabla_{X_{p_k}} s_{p_k\leftrightarrow q}(X_{p_k}(k), X_q(k))\\&\quad - \nabla_{X_{p_k}} s_{p_k\leftrightarrow q}(X_{p_k}(k), \hat{X}_q^p(k))\Big\|\\&\leq L_E\|X_q(k) - \hat{X}_q^p(k)\|. \qquad (59)\end{aligned}$$

Now we want to bound $\|X_q(k) - \hat{X}_q^p(k)\| = \|X_q(k) - X_q(\ell_q^p(k))\|$. We have

$$X_q(k) - X_q(\ell_q^p(k)) = \sum_{k'=\ell_q^p(k)}^{k-1} X_q(k'+1) - X_q(k').$$

Taking the norm of both sides and using the triangle inequality gives

$$\|X_q(k) - X_q(\ell_q^p(k))\| \leq \sum_{k'=\ell_q^p(k)}^{k-1} \|X_q(k'+1) - X_q(k')\|. \qquad (60)$$

Recall that for all q and iterations k', the next iterate $X_q(k'+1)$ is obtained from $X_q(k')$ via the update rule in line 12 of Algorithm 1. The state X_q only changes if robot q was selected to perform an update at iteration k', i.e., if $p_{k'} = q$, in which case

$$X_q(k'+1) = \mathrm{Retr}_{X_q(k')}(-\gamma_k(s(k'))_q),$$

where $(s(k'))_q$ denotes the sub-vector of the search direction $s(k')$ corresponding to robot q's decision variables. If $p_{k'} \neq q$, then $X_q(k'+1) = X_q(k')$ and $(s(k'))_q = 0$.

From Lemma 5, we know that for each manifold $\mathcal{M}^{N_q}$ the Euclidean distance between a pose trajectory and its retraction is bounded via

$$\big\|\mathrm{Retr}_{X_q}(s_q) - X_q\big\| \;\leq\; \delta\,\|s_q\|$$

for all $X_q \in \mathcal{M}^{N_q}$, all $s_q \in T_{X_q}\mathcal{M}^{N_q}$, and some $\delta_q > 0$.

Then we bound the right-hand side of (60) as

$$\begin{aligned}&\big\|X_q(k) - X_q(\ell_q^p(k))\big\|\\&\leq \sum_{k'=\ell_q^p(k)}^{k-1} \Big\|\mathrm{Retr}_{X_q(k')}\big(-\gamma_k(s(k'))_q\big) - X_q(k')\Big\|\\&\leq \sum_{k'=\ell_q^p(k)}^{k-1} \delta\,\big\|-\gamma_k(s(k'))_q\big\|.\end{aligned}$$

We use Assumption 2 to replace $\ell_q^p(k)$ with $k-B$, obtaining

$$\big\|X_q(k) - X_q(\ell_q^p(k))\big\| \;\leq\; \delta \sum_{k'=k-B}^{k-1} \big\|\gamma_k(s(k'))_q\big\|. \qquad (61)$$

Then we substitute (61) into (59), and summing over $q \in S(p_k)$ from (56) gives

$$\begin{aligned}\|g_k - \hat{g}_k\| &\leq \frac{1}{2}L_E\delta\;\gamma_k \sum_{q\in S(p_k)} \sum_{k'=k-B}^{k-1} \big\|(s(k'))_q\big\|\\&= \frac{1}{2}L_E\delta\;\gamma_k \sum_{k'=k-B}^{k-1} \sum_{q\in S(p_k)} \big\|(s(k'))_q\big\|\\&= \frac{1}{2}L_E\delta\;\gamma_k \sum_{k'=k-B}^{k-1} \deg(q)\big\|(s(k'))_q\big\|\\&\leq \frac{1}{2}L_E\delta\;\gamma_k \sum_{k'=k-B}^{k-1} \Delta\big\|(s(k'))_q\big\|, \qquad (62)\end{aligned}$$

where $\deg(q)$ is the degree of robot q in the given pose graph and where we have used $\deg(q) \leq \Delta$, where Δ is from (6).

Since $(s(k'))_q = 0$ unless $q = p_{k'}$, we simplify (62) to

$$\begin{aligned}\|g_k - \hat{g}_k\| &\leq \frac{1}{2}L_E\delta\;\gamma_k \sum_{k'=k-B}^{k-1} \Delta\big\|(s(k'))_q\big\|\\&= \frac{\Delta}{2}L_E\delta\;\gamma_k \sum_{k'=k-B}^{k-1} \|s(k')\|.\end{aligned}$$

■

E. Proof of Theorem 1.

Line 8 of Algorithm 1 computes the initial value of λ_k as $\lambda_k = 2\mu_0 f_{p_k}(D_{p_k})$. Whenever a step is rejected, the algorithm updates $\mu_k \leftarrow \beta\mu_k$ with $\beta > 1$. After $j > 0$ unsuccessful updates, the damping parameter becomes $\lambda_k = 2(\mu_0\beta^j)f_{p_k}(D_{p_k})$. From Lemma 6, we know that a step is guaranteed to succeed once $\lambda_k \geq \kappa$. The result follows by solving for the smallest integer j that satisfies $2\mu_0\beta^j f_{p_k}(D_{p_k}) \geq \kappa$.

F. Proof of Theorem 2

Suppose that at iteration k robot p_k is selected to compute an update. Recall that $\mathcal{X}(k) = (X_1(k), \ldots, X_R(k)) \in \mathcal{M}^{\mathcal{N}}$. For all $k \in \mathbb{N}$, define the aggregate tangent vector $s(k) \in$

$T_{\mathcal{X}(k)}\mathcal{M}^{\mathcal{N}}$ that represents the combined update directions for all robots as

$$s(k) = (0, 0, \ldots, \underbrace{s_{p_k}}_{\text{position } p_k}, \ldots, 0, 0),$$

where s_{p_k} is the local search direction computed via (19). That is, the pth component of $s(k)$ is

$$(s(k))_p = \begin{cases} s_{p_k}, & \text{if } p = p_k \\ 0, & \text{if } p \neq p_k \end{cases}$$

We take $s(k) = 0$ for $k < 0$. By definition of s_{p_k}, the update step is equivalent to,

$$\mathcal{X}(k+1) = \mathrm{Retr}_{\mathcal{X}(k)}(-\gamma_k s(k)).$$

By Lemma 9, $\mathcal{F}$ has a Lipschitz-type property for pullbacks. Therefore,

$$|\mathcal{F}(\mathcal{X}(k+1)) - [\mathcal{F}(\mathcal{X}(k)) + \langle \mathrm{grad}\,\mathcal{F}(\mathcal{X}(k)), -\gamma_k s(k)\rangle]| \leq \frac{L_g}{2}\|s(k)\|^2\gamma_k^2,$$

which implies that

$$\begin{aligned} -\frac{L_g}{2}\|s(k)\|^2\gamma_k^2 &\leq \mathcal{F}(\mathcal{X}(k+1)) \\ &\quad - [\mathcal{F}(\mathcal{X}(k)) + \langle \mathrm{grad}\,\mathcal{F}(\mathcal{X}(k)), -\gamma_k s(k)\rangle] \\ &\leq \frac{L_g}{2}\|s(k)\|^2\gamma_k^2. \end{aligned} \tag{63}$$

Using the right-hand inequality of (63) we find

$$\begin{aligned} &\mathcal{F}(\mathcal{X}(k+1)) - \mathcal{F}(\mathcal{X}(k)) \\ &\quad \leq -\langle \mathrm{grad}\,\mathcal{F}(\mathcal{X}(k)), \gamma_k s(k)\rangle + \frac{L_g}{2}\|s(k)\|^2\gamma_k^2. \end{aligned}$$

Since at each iteration k, only robot p_k is selected to perform an update, $s(k)$ is zero in all components $p \neq p_k$. Thus,

$$\begin{aligned} &\mathcal{F}(\mathcal{X}(k+1)) - \mathcal{F}(\mathcal{X}(k)) \\ &\leq -\langle \mathrm{grad}\,\mathcal{F}(\mathcal{X}(k)), \gamma_k s(k)\rangle + \frac{L_g}{2}\|s(k)\|^2\gamma_k^2 \\ &= -\langle \mathrm{grad}_{X_{p_k}}\mathcal{F}(\mathcal{X}(k)), \gamma_k (s(k))_{p_k}\rangle + \frac{L_g}{2}\|s_{p_k}\|^2\gamma_k^2 \\ &= -\langle g_k, \gamma_k s_{p_k}\rangle + \frac{L_g}{2}\|s_{p_k}\|^2\gamma_k^2, \end{aligned} \tag{64}$$

where $g_k \triangleq \mathrm{grad}_{X_{p_k}}\mathcal{F}(\mathcal{X}(k)) = \mathrm{grad}_{X_{p_k}} f_{p_k}(X_{p_k}(k), X_{S(p_k)}(k))$ is the true local gradient at iteration k. We let $\hat{g}_k \triangleq \mathrm{grad}_{X_{p_k}} f_{p_k}(X_{p_k}(k), \hat{X}_{S(p_k)}(k))$ be the outdated local gradient that robot p_k computes at iteration k.

The first term on the right hand side of (64) can be expressed as

$$\begin{aligned} \langle g_k, \gamma_k s_{p_k}\rangle &= \langle \hat{g}_k + (g_k - \hat{g}_k), \gamma_k s_{p_k}\rangle \\ &= \langle \hat{g}_k, \gamma_k s_{p_k}\rangle + \langle (g_k - \hat{g}_k), \gamma_k s_{p_k}\rangle. \end{aligned} \tag{65}$$

For the first inner product in (65) we use (19) to find

$$\begin{aligned} \langle \hat{g}_k, \gamma_k s_{p_k}\rangle &= \langle (J_k^\top J_k + \lambda_k I) s_{p_k}, \gamma_k s_{p_k}\rangle \\ &= \|J_k s_{p_k}\|^2\gamma_k + \lambda_k\|s_{p_k}\|^2\gamma_k \geq \lambda_k\|s_{p_k}\|^2\gamma_k, \end{aligned} \tag{66}$$

where $J_k \triangleq J_p(X_p(k), \hat{X}_{S(p)}(k))$.
For the second inner product in (65), we have

$$\begin{aligned} -\gamma_k\|g_k - \hat{g}_k\|\|s_{p_k}\| &\leq \langle (g_k - \hat{g}_k), \gamma_k s_{p_k}\rangle \\ &\leq \gamma_k\|g_k - \hat{g}_k\|\|s_{p_k}\|. \end{aligned} \tag{67}$$

We take the left inequality in (67) and combine it with the result of Lemma 13 to reach

$$\begin{aligned} &\langle (g_k - \hat{g}_k), \gamma_k s_{p_k}\rangle \geq -\gamma_k\|g_k - \hat{g}_k\|\|s_{p_k}\| \\ &\geq -\frac{\Delta}{2}L_E\delta_{max}\,\gamma_k\left(\sum_{k'=k-B}^{k-1}\|s(k')\|\right)\|s_{p_k}\|\gamma_k \geq -A_k\gamma_k^2, \end{aligned} \tag{68}$$

where $A_k = \frac{\Delta L_E \delta_{max}}{2}\|s_{p_k}\|\left(\sum_{k'=k-B}^{k-1}\|s(k')\|\right) > 0$.

Now we substitute (66) and (68) into (65) to find

$$\langle g_k, \gamma_k s_{p_k}\rangle \geq \lambda_k\|s_{p_k}\|^2\gamma_k - A_k\gamma_k^2. \tag{69}$$

If $s_{p_k} = 0$, then (69) holds trivially, which implies that a stationary point has been reached by Algorithm 1. If Algorithm 1 has not reached a stationary point, then $s_{p_k} \neq 0$, and we plug (69) into (64) to obtain

$$\begin{aligned} \mathcal{F}(\mathcal{X}(k+1)) - \mathcal{F}(\mathcal{X}(k)) &\leq -\langle g_k, \gamma_k s_{p_k}\rangle + \frac{L_g}{2}\|s_{p_k}\|^2\gamma_k^2 \\ &\leq -\left(\lambda_k\|s_{p_k}\|^2\gamma_k - A_k\gamma_k^2\right) + \frac{L_g}{2}\|s_{p_k}\|^2\gamma_k^2 \\ &= -\lambda_k\|s_{p_k}\|^2\gamma_k + A_k\gamma_k^2 + \frac{L_g}{2}\|s_{p_k}\|^2\gamma_k^2. \end{aligned} \tag{70}$$

To prove convergence, we analyze the total reduction in the cost function over K iterations. Summing (70) from $k = 0$ to $K - 1$, the left-hand side forms a telescoping sum of the form

$$\begin{aligned} &\mathcal{F}(\mathcal{X}(K)) - \mathcal{F}(\mathcal{X}(0)) \\ &= \sum_{k=0}^{K-1}\left(\mathcal{F}(\mathcal{X}(k+1)) - \mathcal{F}(\mathcal{X}(k))\right) \\ &\leq \sum_{k=0}^{K-1}\Bigg[\left(\frac{L_g\gamma_k^2}{2} - \lambda_k\gamma_k\right)\|s_{p_k}\|^2 \\ &\qquad + \frac{\Delta L_E\delta\gamma_k^2}{2}\|s_{p_k}\|\sum_{k'=k-B}^{k-1}\|s(k')\|\Bigg]. \end{aligned}$$

Rearranging to isolate the total cost reduction gives

$$\begin{aligned} &\mathcal{F}(\mathcal{X}(0)) - \mathcal{F}(\mathcal{X}(K)) \\ &\geq \sum_{k=0}^{K-1}\Bigg(\left(\gamma_k\lambda_k - \gamma_k^2\frac{L_g}{2}\right)\|s_{p_k}\|^2 \\ &\qquad - \frac{\Delta L_E\delta}{2}\gamma_k^2\sum_{k'=k-B}^{k-1}\|s_{p_k}\|\cdot\|s(k')\|\Bigg). \end{aligned} \tag{71}$$

We next use $\|s_{p_k}\|\|s(k')\| \leq \frac{1}{2}\left(\|s_{p_k}\|^2 + \|s(k')\|^2\right)$ to find

$$\begin{aligned}
&\sum_{k=0}^{K-1}\sum_{k'=k-B}^{k-1} \|s_{p_k}\|\|s(k')\| \\
&\leq \sum_{k=0}^{K-1}\sum_{k'=k-B}^{k-1} \frac{1}{2}\left(\|s_{p_k}\|^2 + \|s(k')\|^2\right) \\
&= \frac{1}{2}\sum_{k=0}^{K-1}\sum_{k'=k-B}^{k-1} \|s_{p_k}\|^2 + \frac{1}{2}\sum_{k=0}^{K-1}\sum_{k'=k-B}^{k-1} \|s(k')\|^2. \quad (72)
\end{aligned}$$

We bound these sums explicitly using the maximum delay B. For the first term on the right-hand side of (72), since the summand $\|s_{p_k}\|^2$ is independent of the inner index k', and the inner sum has at most B non-zero terms, we have

$$\frac{1}{2}\sum_{k=0}^{K-1}\sum_{k'=k-B}^{k-1} \|s_{p_k}\|^2 \;\leq\; \frac{1}{2}\sum_{k=0}^{K-1} B\|s_{p_k}\|^2 \;=\; \frac{B}{2}\sum_{k=0}^{K-1} \|s_{p_k}\|^2. \quad (73)$$

For the second term on the right-hand side of (72), we observe that any specific step index j appears in the inner sum only when $k - B \leq j \leq k-1$. Thus, each term of the form $\|s_j\|^2$ is counted at most B times in the double summation, which lets us write

$$\frac{1}{2}\sum_{k=0}^{K-1}\sum_{k'=k-B}^{k-1} \|s_{k'}\|^2 \;\leq\; \frac{B}{2}\sum_{k=0}^{K-1} \|s_{p_k}\|^2. \quad (74)$$

Substituting (73) and (74) into (71) gives

$$\mathcal{F}(\mathcal{X}(0)) - \mathcal{F}(\mathcal{X}(k)) = \sum_{k=0}^{K-1} \sigma_k \|s_{p_k}\|^2,$$

where $\sigma_k = \gamma_k\lambda_k - \gamma_k^2(\frac{L_g}{2} + \frac{\Delta L_E \delta B}{2})$. For descent to be guaranteed, we require $\sigma_k > 0$, which holds if

$$\gamma_k\lambda_k > \gamma_k^2(\frac{L_g}{2} + \frac{\Delta L_E \delta B}{2}).$$

That inequality is satisfied if

$$0 < \gamma_k < \frac{2\lambda_k}{L_g + \Delta L_E \delta B},$$

which combined with the constraint $\gamma_k < 1$ yields (**??**). Here we require $\gamma_k \leq 1$ because taking a larger step would exceed the displacement optimized by our local quadratic model, potentially moving into regions where the approximation is invalid and causing numerical instability.

G. Proof of Theorem 3

Since $\mathcal{F}$ is non-negative, we can take the expectation of the cumulative descent inequality (25) from Theorem 2 to find

$$\mathcal{F}(\mathcal{X}(0)) \geq \mathbb{E}\left[\mathcal{F}(\mathcal{X}(0)) - \mathcal{F}(\mathcal{X}(k))\right] \geq \sum_{k=0}^{K-1} \sigma_k \mathbb{E}[\|s_{p_k}\|^2],$$

and in particular

$$\mathcal{F}(\mathcal{X}^{(0)}) \geq \sigma_{\min} \sum_{k=0}^{K-1} \mathbb{E}[\|s_{p_k}\|^2]. \quad (75)$$

We now bound the sum of expected squared gradients $\sum \mathbb{E}[\|g_k\|^2]$ in terms of this sum of squared steps $\sum \mathbb{E}[\|s_{p_k}\|^2]$. From Theorem 2, the sequence of iterates $\{\mathcal{X}(k)\}_{k\in\{0,\ldots,K-1\}}$ is strictly non-increasing in cost, which implies that all iterates remain within the sublevel set $\mathcal{L}(\mathcal{X}(0))$. By Lemma 1, this set is compact. Using the triangle inequality and Lemma 13, for any $k \in \{0,\ldots,K-1\}$

$$\|g_k\| \leq \|\hat{g}_k\| + \|g_k - \hat{g}_k\| \leq \|\hat{g}_k\| + \gamma_k \frac{\Delta L_E \delta}{2} \sum_{k'=k-B}^{k-1} \|s(k')\|.$$

Squaring both sides and using $(a+b)^2 \leq 2a^2 + 2b^2$ gives

$$\|g_k\|^2 \leq 2\|\hat{g}_k\|^2 + 2\gamma_k^2 \left(\frac{\Delta L_E \delta}{2} \sum_{k'=k-B}^{k-1} \|s(k')\|\right)^2. \quad (76)$$

We analyze the two terms on the right-hand side separately.

From the relation $(H_{p_k} + \lambda_k I)s_{p_k} = \hat{g}_k$ and Lemma 12, we have $\|\hat{g}_k\| \leq \zeta\|s_{p_k}\|$ and thus

$$2\|\hat{g}_k\|^2 \leq 2\zeta^2\|s_{p_k}\|^2. \quad (77)$$

Using the Cauchy-Schwarz inequality on the summation in (76), namely $(\sum_{j=1}^B a_j)^2 \leq B\sum_{j=1}^B a_j^2$, we find

$$\begin{aligned}
&2\gamma_k^2 \left(\frac{\Delta L_E \delta}{2} \sum_{k'=k-B}^{k-1} \|s(k')\|\right)^2 \\
&\qquad \leq 2\gamma_k^2 (\frac{\Delta L_E \delta}{2})^2 B \sum_{k'=k-B}^{k-1} \|s(k')\|^2. \quad (78)
\end{aligned}$$

Now we sum (76) from $k=0$ to $K-1$, take expectations, and apply (77) and (78) to find

$$\begin{aligned}
&\sum_{k=0}^{K-1} \mathbb{E}[\|g_k\|^2] \\
&\quad \leq \sum_{k=0}^{K-1} \Bigg(2\zeta^2 \mathbb{E}[\|s_{p_k}\|^2] \\
&\qquad + \frac{(\Delta L_E \delta \gamma_k)^2 B}{2} \sum_{k'=k-B}^{k-1} \mathbb{E}[\|s(k')\|^2] \Bigg). \quad (79)
\end{aligned}$$

For each k, the value of $\|s(k')\|^2$ appears in at most B of the inner summations. Therefore,

$$\sum_{k=0}^{K-1}\sum_{k'=k-B}^{k-1} \mathbb{E}[\|s(k')\|^2] \leq B\sum_{k=0}^{K-1} \mathbb{E}[\|s(k)\|^2].$$

Substituting this bound into (79) gives

$$\begin{aligned}
&\sum_{k=0}^{K-1} \mathbb{E}[\|g_k\|^2] \\
&\leq \sum_{k=0}^{K-1} 2\zeta^2 \mathbb{E}[\|s_{p_k}\|^2] + 2\gamma_k^2 \big(\frac{\Delta L_E \delta}{2}\big)^2 B^2 \sum_{k=0}^{K-1} \mathbb{E}[\|s(k)\|^2] \\
&\quad = \left(2\zeta^2 + 2\gamma_k^2 \left(\frac{\Delta L_E \delta}{2}\right)^2 B^2\right) \sum_{k=0}^{K-1} \mathbb{E}[\|s_{p_k}\|^2] \\
&\quad = \left(2\zeta^2 + \frac{1}{2}\gamma_k^2 (\Delta L_E \delta B)^2\right) \sum_{k=0}^{K-1} \mathbb{E}[\|s_{p_k}\|^2] \\
&\quad \leq \left(2\zeta^2 + \frac{1}{2}(\Delta L_E \delta B)^2\right) \sum_{k=0}^{K-1} \mathbb{E}[\|s_{p_k}\|^2],
\end{aligned}$$

where the last line follows because $\gamma_k < 1$.

Let $\Upsilon \triangleq 2\zeta^2 + \frac{1}{2}(\Delta L_E \delta B)^2$. Then

$$\sum_{k=0}^{K-1} \mathbb{E}[\|g_k\|^2] \leq \Upsilon \sum_{k=0}^{K-1} \mathbb{E}[\|s_{p_k}\|^2]. \tag{80}$$

Rearranging (75) gives $\sum_{k=0}^{K-1} \mathbb{E}[\|s_{p_k}\|^2] \leq \frac{\mathcal{F}(\mathcal{X}^{(0)})}{\sigma_{\min}}$. Substituting this bound into (80) gives

$$\sum_{k=0}^{K-1} \mathbb{E}[\|g_k\|^2] \leq \frac{\Upsilon \mathcal{F}(\mathcal{X}^{(0)})}{\sigma_{\min}}.$$

Since p_k is chosen uniformly at random in Algorithm 1 we have $\mathbb{E}_{p_k}[\|g_k\|^2] = \frac{1}{R}\|\operatorname{grad} \mathcal{F}(\mathcal{X}(k))\|^2$. Then

$$\frac{1}{R} \sum_{k=0}^{K-1} \mathbb{E}[\|\operatorname{grad} \mathcal{F}(\mathcal{X}(k))\|^2] \leq \frac{\Upsilon \mathcal{F}(\mathcal{X}^{(0)})}{\sigma_{\min}}.$$

Replacing the sum with K times the minimum gives

$$\frac{K}{R} \min_{k \in \{0,\ldots,K-1\}} \mathbb{E}[\|\operatorname{grad} \mathcal{F}(\mathcal{X}(k))\|^2] \leq \frac{\Upsilon \mathcal{F}(\mathcal{X}(0))}{\sigma_{\min}}.$$

Rearranging gives the final bound of

$$\min_{k \in \{0,\ldots,K-1\}} \mathbb{E}[\|\operatorname{grad} \mathcal{F}(\mathcal{X}(k))\|^2] \leq \frac{\Upsilon R \mathcal{F}(\mathcal{X}^{(0)})}{K \sigma_{\min}}.$$