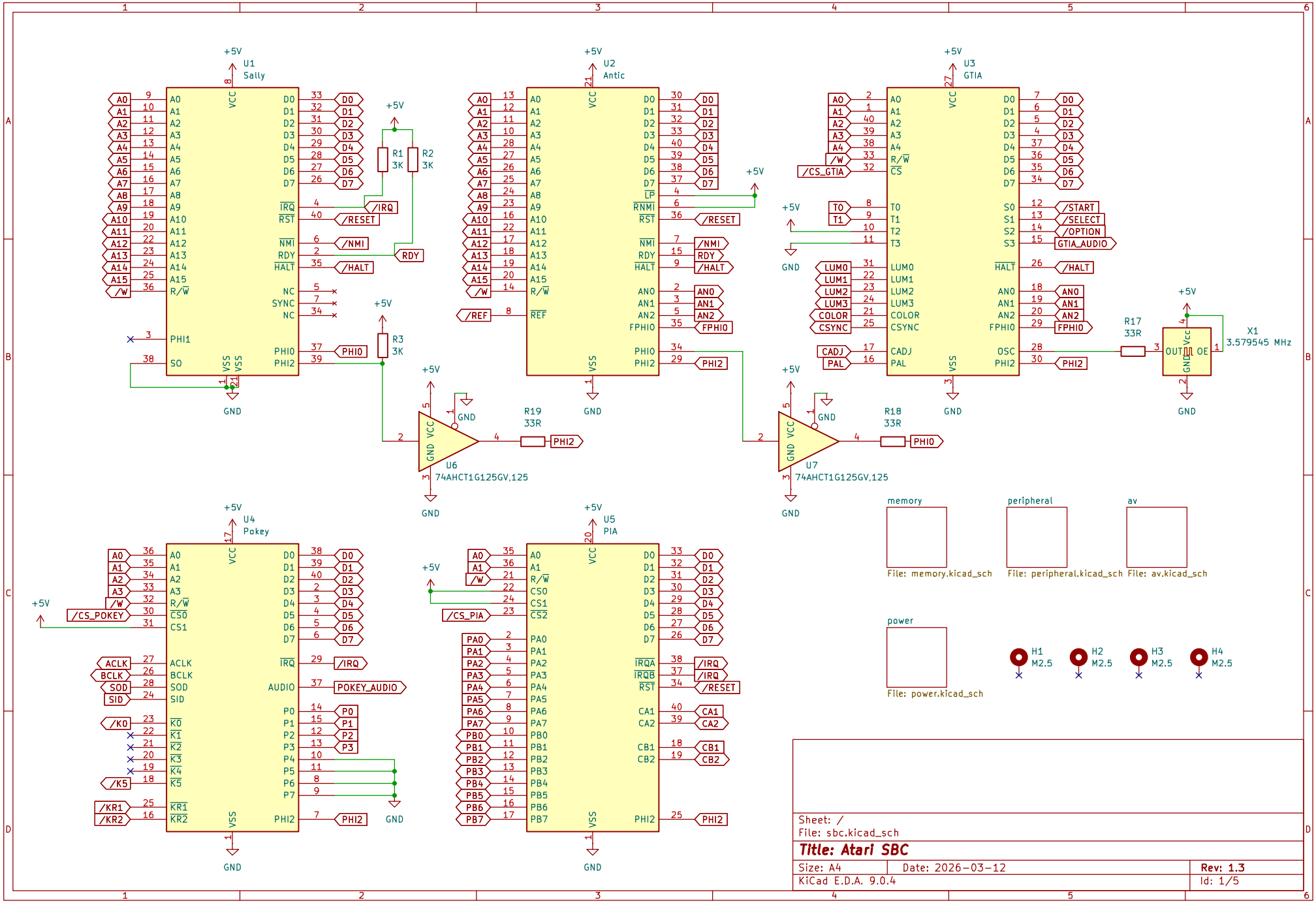
U1
Sally
U2
Antic
U3
GTIA
U4
Pokey
U5
PIA
U6
74AHCT1G125GV,125
U7
74AHCT1G125GV,125
X1
3.579545 MHz
R1
3K
R2
3K
R3
3K
R17
33R
R18
33R
R19
33R
memory
File: memory.kicad_sch
peripheral
File: peripheral.kicad_sch
av
File: av.kicad_sch
power
File: power.kicad_sch
H1
M2.5
H2
M2.5
H3
M2.5
H4
M2.5
Sheet: /
File: sbc.kicad_sch
Title: Atari SBC
Size: A4
Date: 2026-03-12
Rev: 1.3
KiCad E.D.A. 9.0.4
Id: 1/5

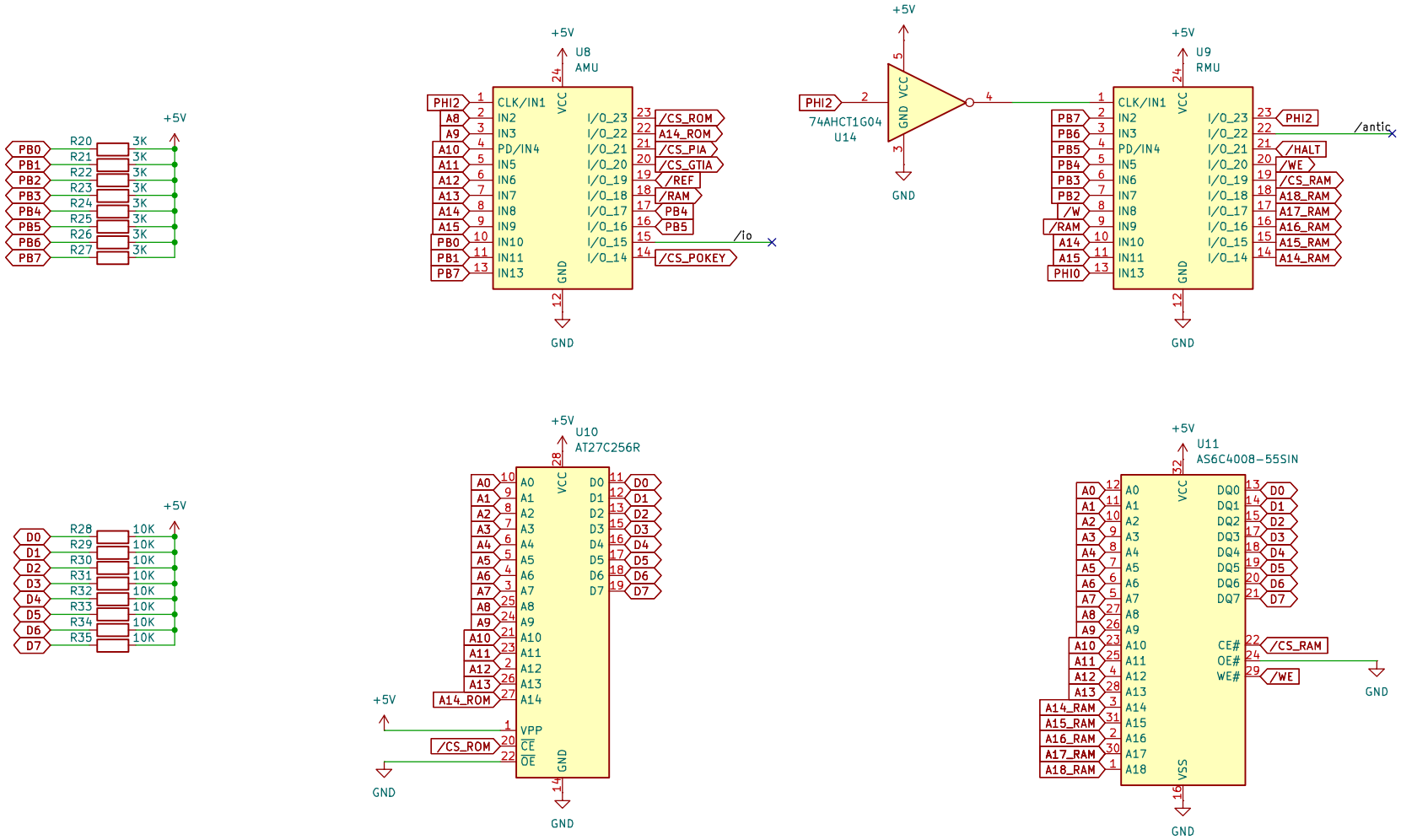

Sheet: /memory/
File: memory.kicad_sch

Title: Atari SBC

Size: A4	Date: 2026-03-12	Rev: 1.3
KiCad E.D.A. 9.0.4		Id: 2/5

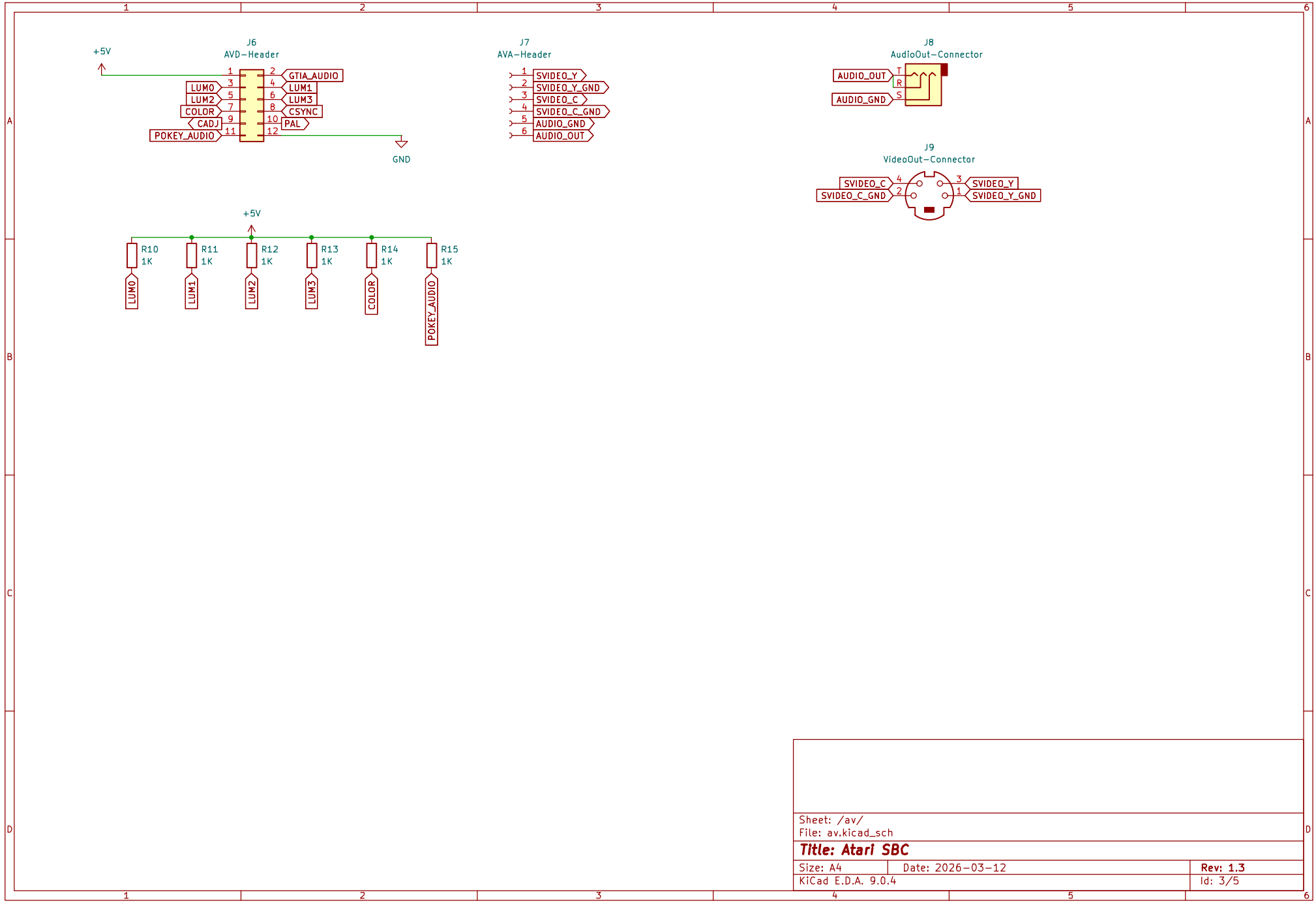
J6
AVD-Header
+5V
GTIA_AUDIO
LUM0
LUM1
LUM2
LUM3
COLOR
CSYNC
CADJ
PAL
POKEY_AUDIO
GND
J7
AVA-Header
SVIDEO_Y
SVIDEO_Y_GND
SVIDEO_C
SVIDEO_C_GND
AUDIO_GND
AUDIO_OUT
J8
AudioOut-Connector
AUDIO_OUT
AUDIO_GND
T
R
S
J9
VideoOut-Connector
SVIDEO_C
SVIDEO_C_GND
SVIDEO_Y
SVIDEO_Y_GND
+5V
R10 1K
R11 1K
R12 1K
R13 1K
R14 1K
R15 1K
LUM0
LUM1
LUM2
LUM3
COLOR
POKEY_AUDIO
Sheet: /av/
File: av.kicad_sch
Title: Atari SBC
Size: A4
Date: 2026-03-12
Rev: 1.3
KiCad E.D.A. 9.0.4
Id: 3/5

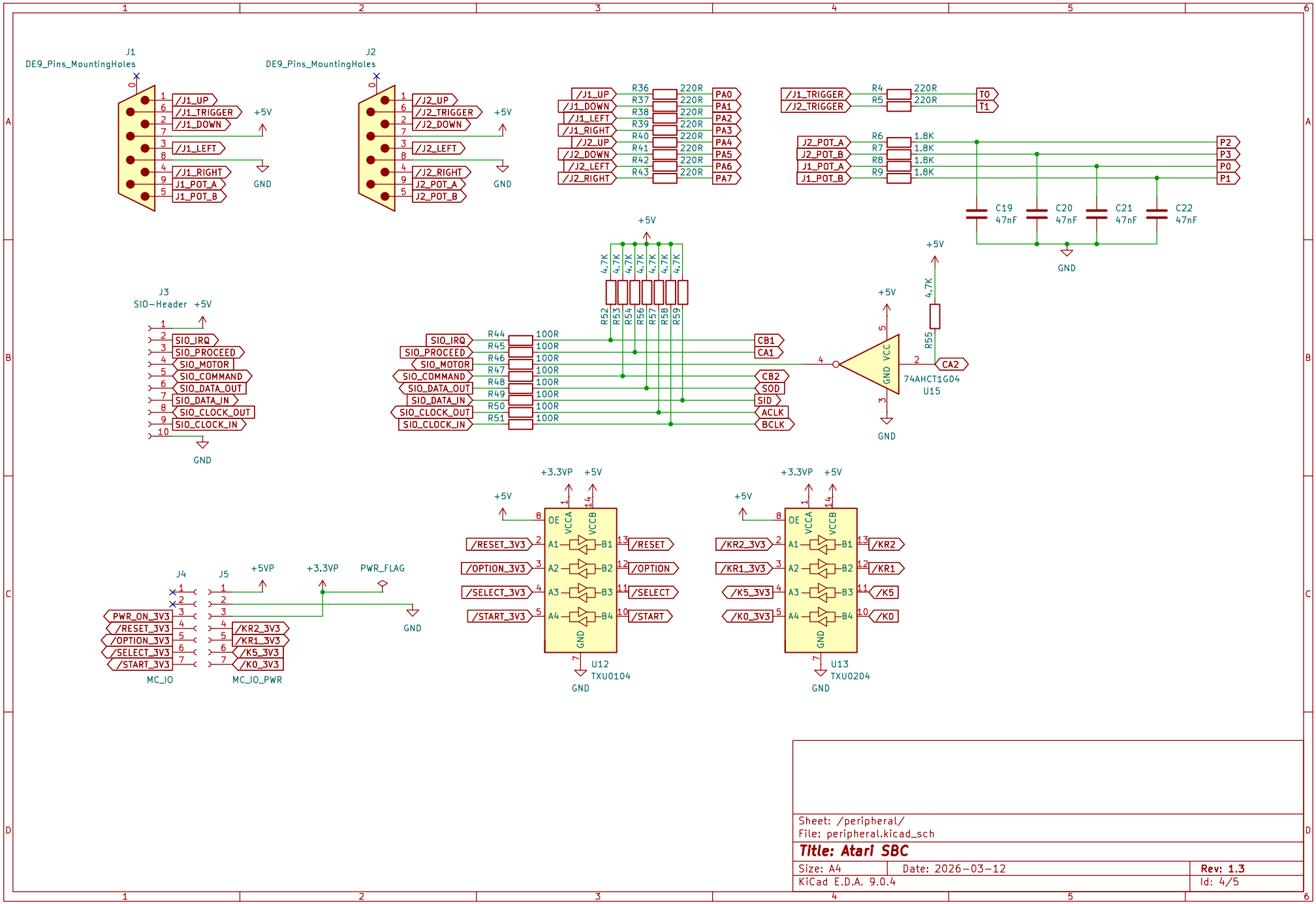

Sheet: /peripheral/
File: peripheral.kicad_sch

Title: Atari SBC

Size: A4	Date: 2026-03-12	Rev: 1.3
KiCad E.D.A. 9.0.4		Id: 4/5

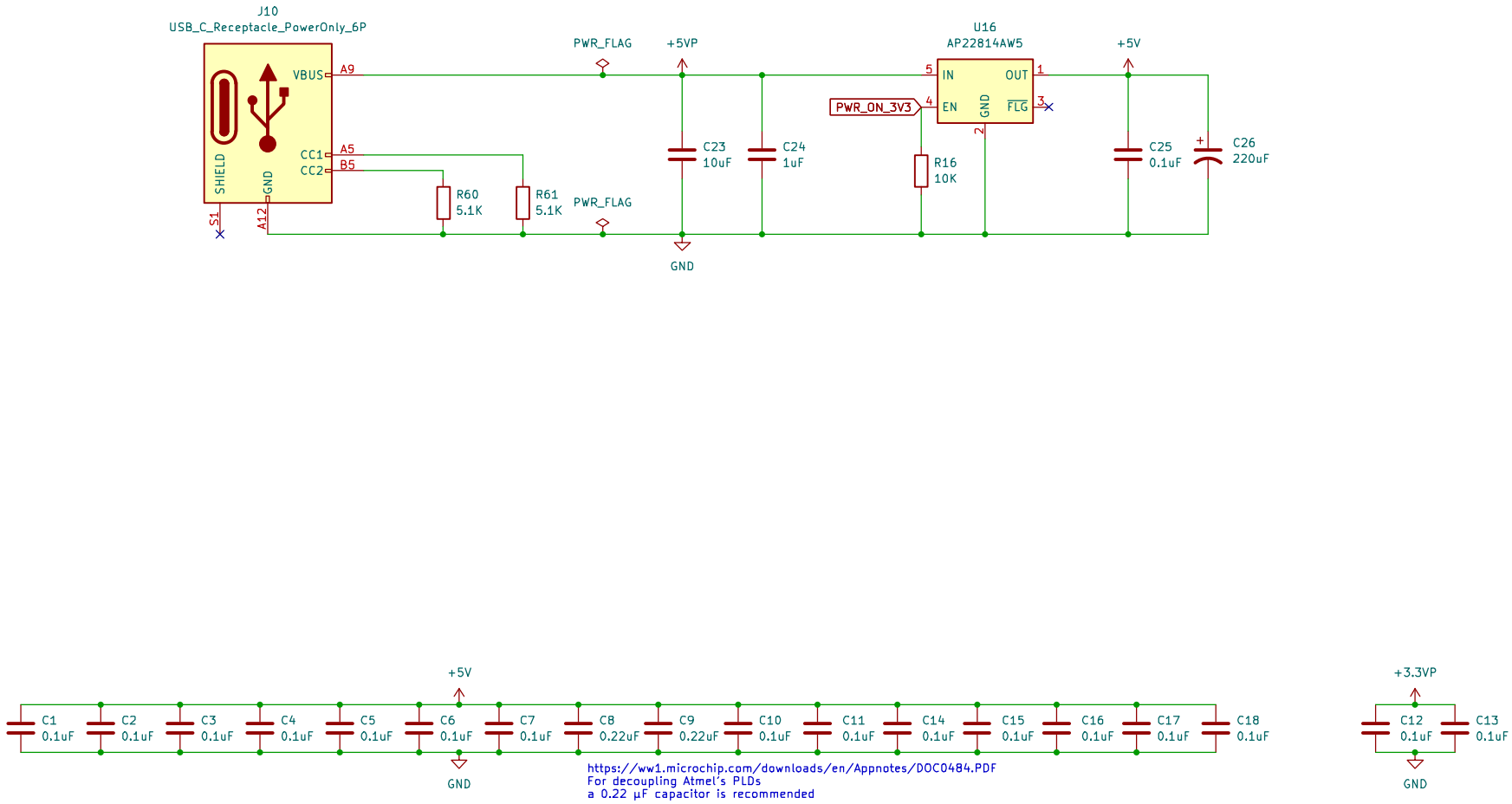

Sheet: /power/
File: power.kicad_sch

Title: Atari SBC

Size: A4	Date: 2026-03-12	**Rev: 1.3**
KiCad E.D.A. 9.0.4		Id: 5/5