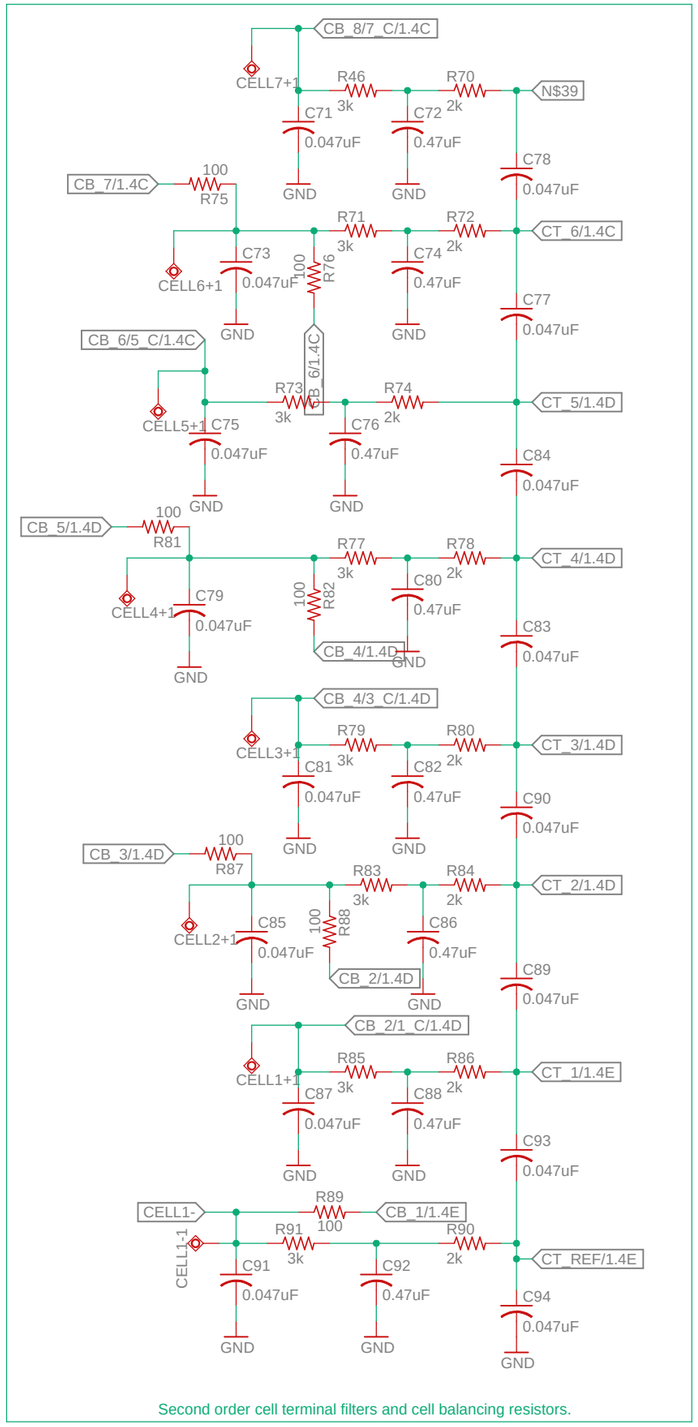

Second order cell terminal filters and cell balancing resistors.

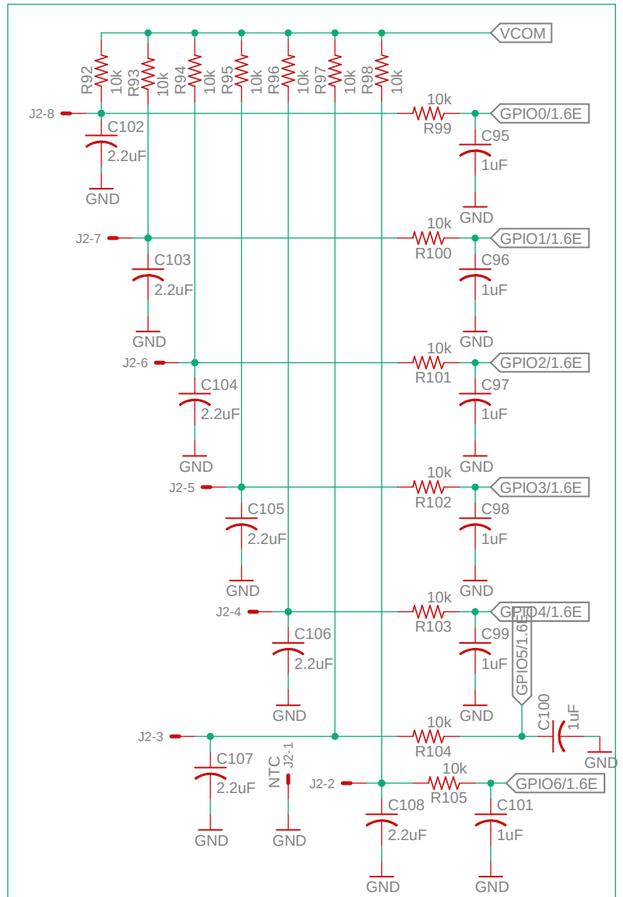

Temperature Channels

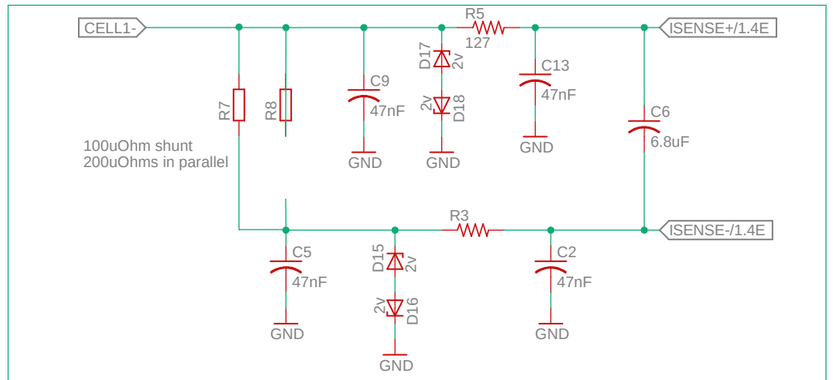

cell balancing components and current channel filter

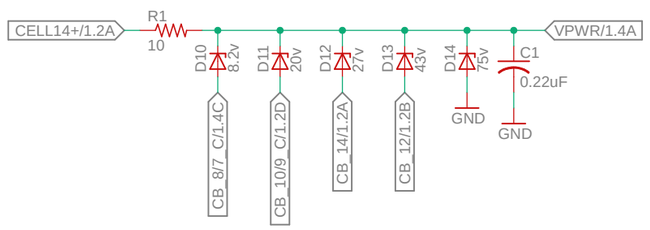

Hot Plug Protection : VPWR1, 2 components to withstand hot plug

BMSV1.0

not saved!

Sheet: 2/2