Table of Contents

1	TITLE
2	NOTES
3	SCHEMATIC

Revisions

Rev	Description	Date	Approved
01	Prototype Release	24 - APR -15	Rousseille Philippe

KIT33771A-SPI_EVB

freescale

Analog Sensor Product Group
6501 William Cannon Drive West
Austin, TX 78735-8598

This document contains information proprietary to Freescale and shall not be used for engineering design, procurement or manufacture in whole or in part without the express written permission of Freescale.

ICAP Classification: FCP: FIUO: X PUBI:

Designer: <Designer>	Drawing Title: MC33771_EVB_SPI		
Drawn by: <DrawnBy>	Page Title: Table of Contents/Revisions		
Approved: <Approver>	Size C	Document Number SCH-XXXXX PDF: SPF-XXXXX	Rev 01
	Date: Friday, April 24, 2015	Sheet 1 of 2	

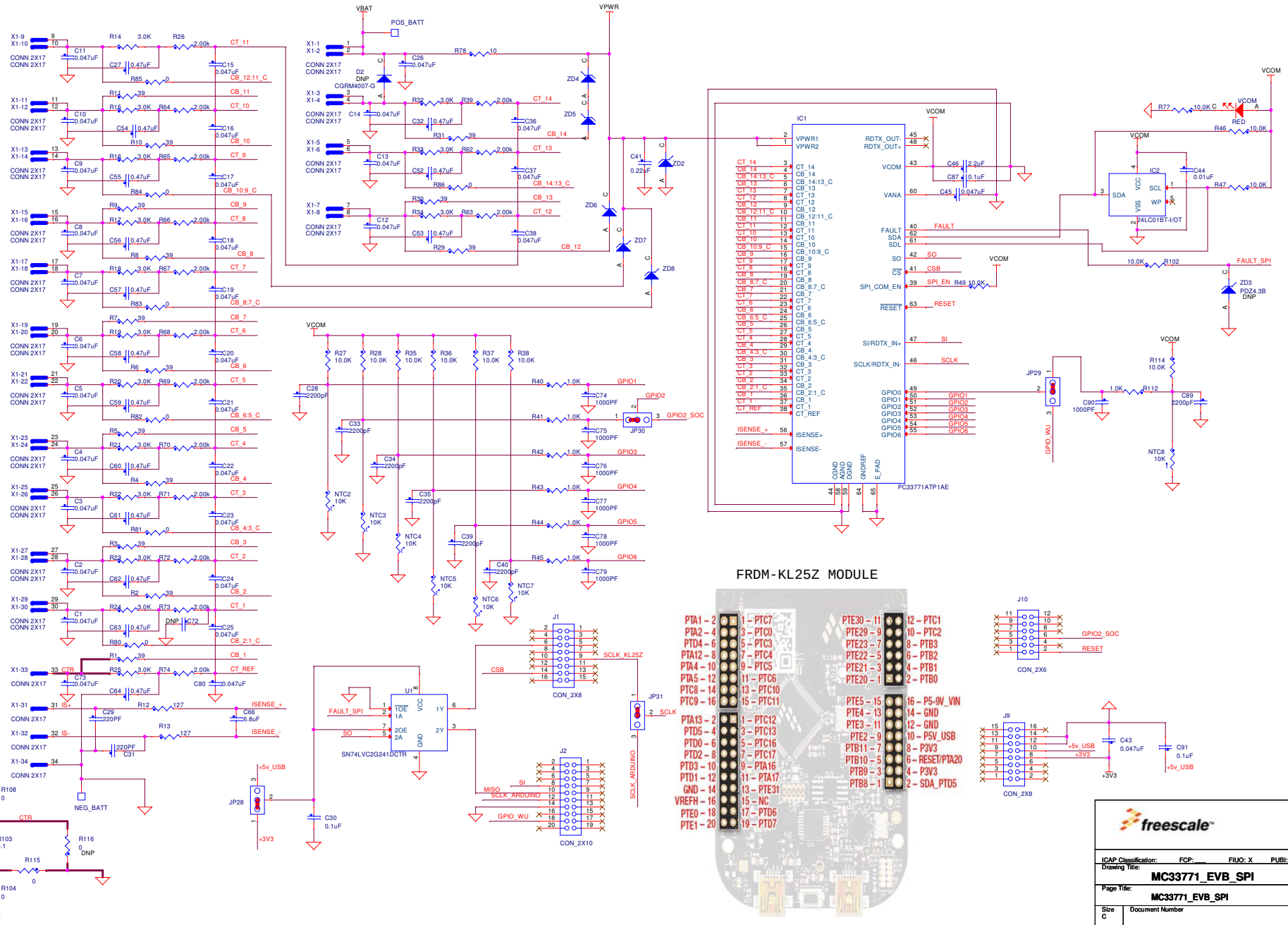
FRDM-KL25Z MODULE
IC1
PC33771ATP1AE
VBAT
VPWR
VCOM
POS_BATT
NEG_BATT
SN74LVC2G241DCTR
24LC01BT-I/OT
CON_2X8
CON_2X10
CON_2X6
freescale
ICAP Classification: FCP: FIUO: X PUBI:
Drawing Title: MC33771_EVB_SPI
Page Title: MC33771_EVB_SPI
Size C
Document Number
Rev 01
Date: Friday, April 24, 2015
Sheet 2 of 2