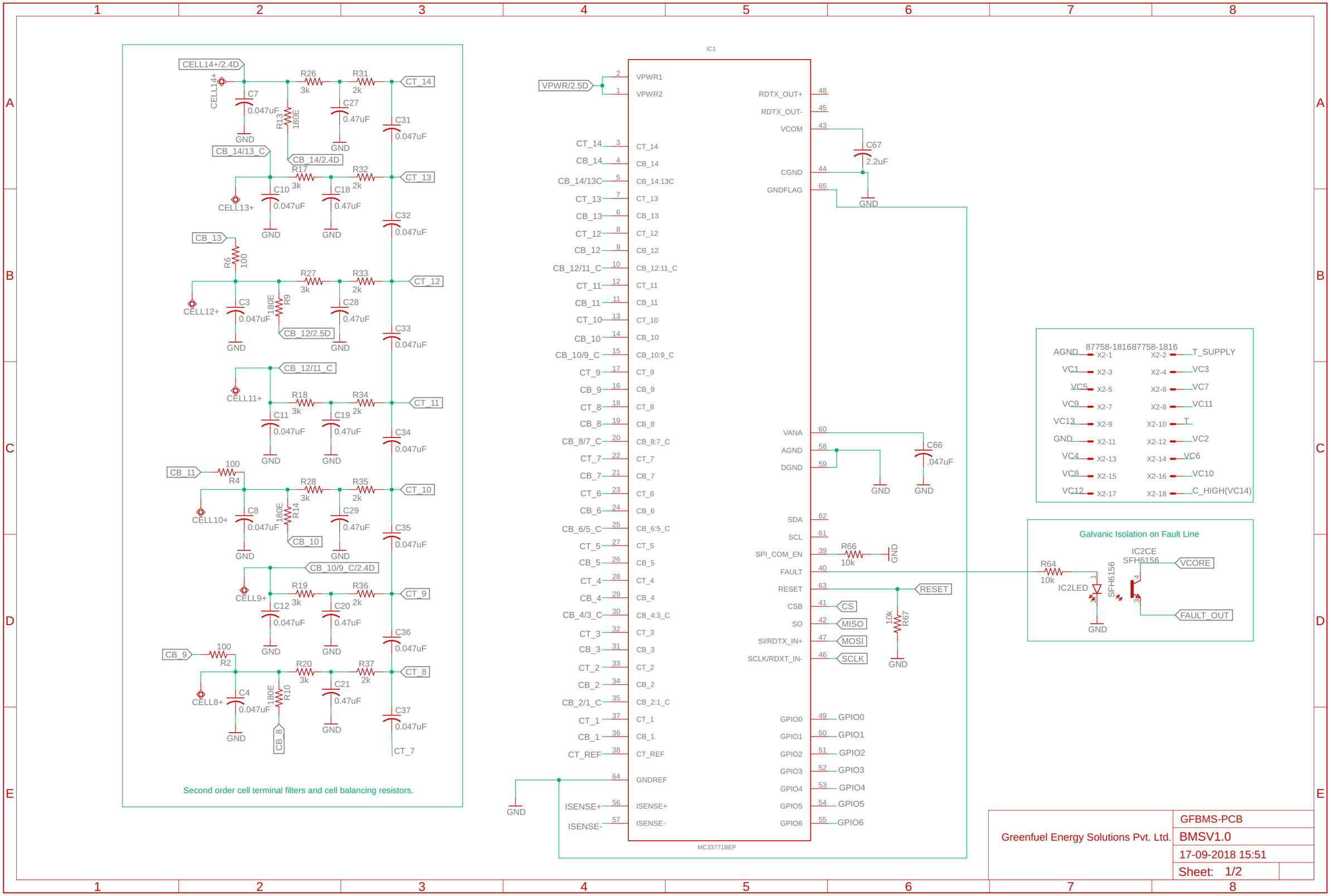
CELL14+/2.4D
CELL14+
C7
0.047uF
GND
R26
3k
R31
2k
CT_14
R13
180E
C27
0.47uF
C31
0.047uF
CB_14/13_C
CB_14/2.4D
R17
3k
R32
2k
CT_13
CELL13+
C10
0.047uF
C18
0.47uF
C32
0.047uF
CB_13
R6
100
R27
3k
R33
2k
CT_12
CELL12+
C3
0.047uF
R9
180E
C28
0.47uF
CB_12/2.5D
C33
0.047uF
CB_12/11_C
CELL11+
R18
3k
R34
2k
CT_11
C11
0.047uF
C19
0.47uF
C34
0.047uF
CB_11
100
R4
R28
3k
R35
2k
CT_10
CELL10+
C8
0.047uF
R14
180E
C29
0.47uF
CB_10
C35
0.047uF
CB_10/9_C/2.4D
CELL9+
R19
3k
R36
2k
CT_9
C12
0.047uF
C20
0.47uF
C36
0.047uF
CB_9
100
R2
R20
3k
R37
2k
CT_8
CELL8+
C4
0.047uF
R10
180E
C21
0.47uF
C37
0.047uF
CB_8
CT_7
Second order cell terminal filters and cell balancing resistors.
IC1
VPWR/2.5D
VPWR1
VPWR2
CT_14
CB_14
CB_14/13C
CT_13
CB_13
CT_12
CB_12
CB_12/11_C
CT_11
CB_11
CT_10
CB_10
CB_10/9_C
CT_9
CB_9
CT_8
CB_8
CB_8/7_C
CT_7
CB_7
CT_6
CB_6
CB_6/5_C
CT_5
CB_5
CT_4
CB_4
CB_4/3_C
CT_3
CB_3
CT_2
CB_2
CB_2/1_C
CT_1
CB_1
CT_REF
GNDREF
ISENSE+
ISENSE-
CB_14:13C
CB_12:11_C
CB_10:9_C
CB_8:7_C
CB_6:5_C
CB_4:3_C
CB_2:1_C
RDTX_OUT+
RDTX_OUT-
VCOM
C67
2.2uF
CGND
GNDFLAG
VANA
AGND
DGND
C66
.047uF
SDA
SCL
SPI_COM_EN
R66
10k
FAULT
RESET
CSB
CS
SO
MISO
SI/RDTX_IN+
MOSI
SCLK/RDXT_IN-
SCLK
R67
10k
GPIO0
GPIO1
GPIO2
GPIO3
GPIO4
GPIO5
GPIO6
MC33771BEP
87758-181687758-1816
AGND X2-1
X2-2 T_SUPPLY
VC1 X2-3
X2-4 VC3
VC5 X2-5
X2-6 VC7
VC9 X2-7
X2-8 VC11
VC13 X2-9
X2-10 T
GND X2-11
X2-12 VC2
VC4 X2-13
X2-14 VC6
VC8 X2-15
X2-16 VC10
VC12 X2-17
X2-18 C_HIGH(VC14)
Galvanic Isolation on Fault Line
R64
10k
IC2LED
SFH6156
IC2CE
SFH6156
VCORE
FAULT_OUT
Greenfuel Energy Solutions Pvt. Ltd.
GFBMS-PCB
BMSV1.0
17-09-2018 15:51
Sheet: 1/2

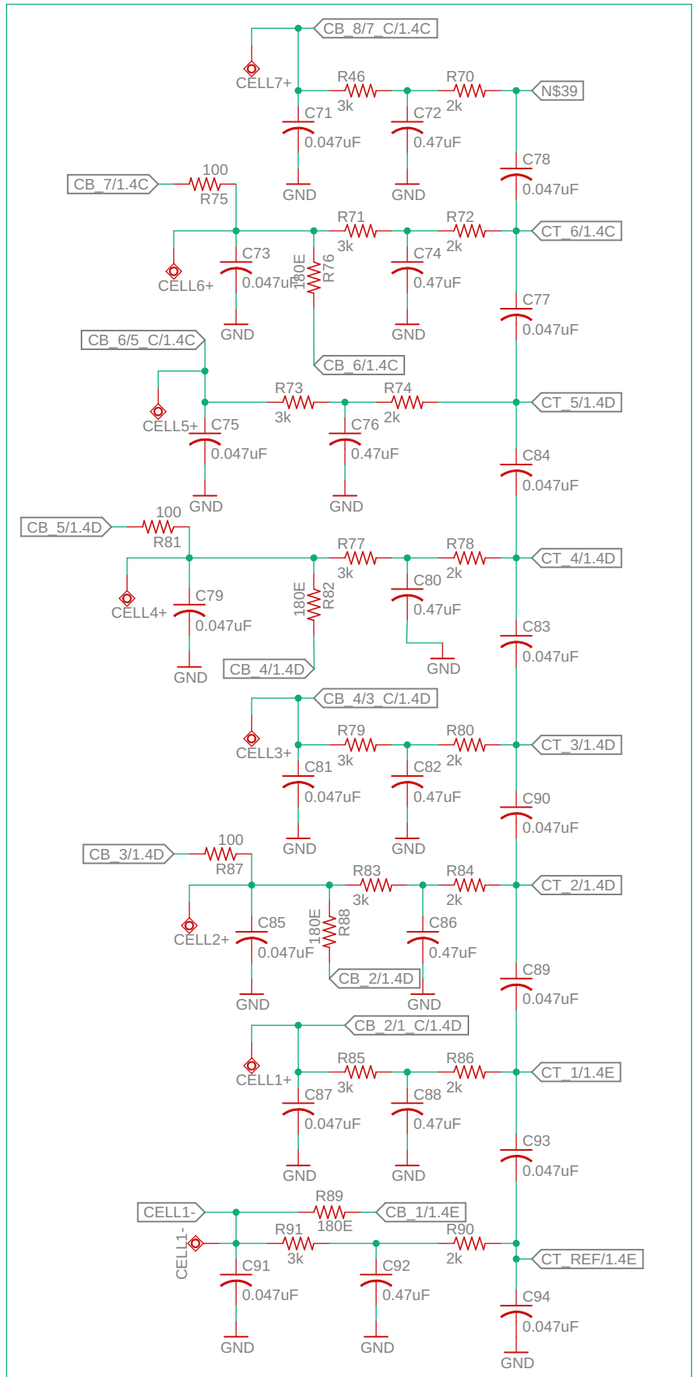

Second order cell terminal filters and cell balancing resistors.

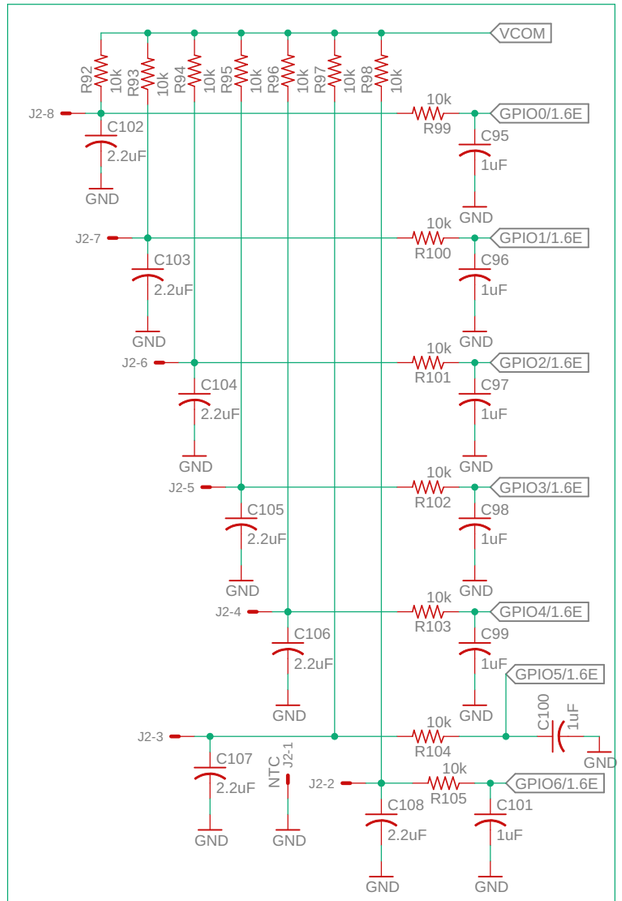

Temperature Channels

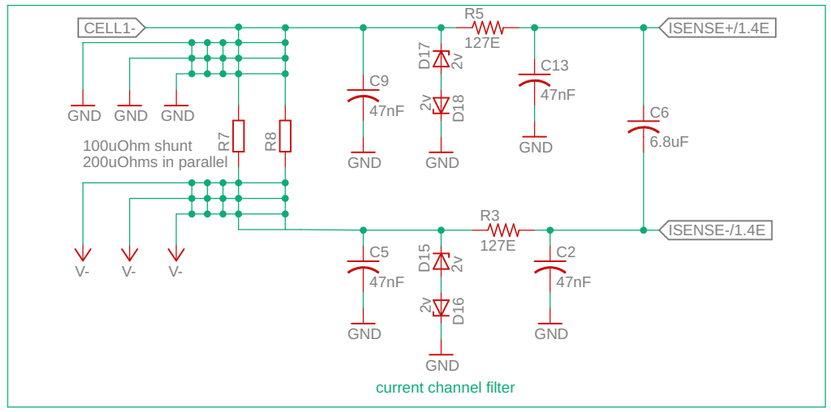

current channel filter

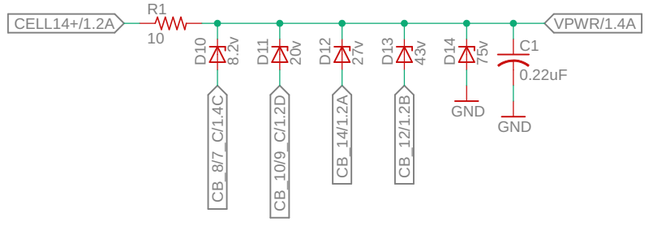

Hot Plug Protection : VPWR1, 2 components to withstand hot plug

Greenfuel Energy Solutions Pvt. Ltd.	GFBMS-PCB
	BMSV1.0
	17-09-2018 15:51
	Sheet: 2/2