Module - 2

Machine Tool Operations: Lathe - Parts of Centre Lathe, Lathe Operations such as Turning, Facing, Knurling, Thread Cutting, Taper turning by Swiveling Compound Rest Method. Drilling Operations: Drilling, Reaming, Boring, Counter Boring, Counter Sinking and Tapping,

Introduction to Automated Manufacturing Systems: Introduction, definition of automation, types of automation, basic elements of automated system, Numerical Control system, Computer Numerical Control (CNC) system, general configuration or components of CNC, advantages and applications of CNC.

Introduction:

Hand Tools: are one in which some specific operations are performed by holding the tool in hand.

Ex: Spanner, Screw driver, Hammer, Punch, cutter, wrenches, files, hacksaw etc.

Machine Tools: are one which are driven by external power source (Electric motor) and a cutting tool to remove unwanted material from the given workpiece material.

- Since the power is driven through external motor and make use of cutting tools hence the name machine tools.

Ex: Lathe Machine tool, Drilling Machine tool, Milling Machine tool etc.

Three Machining Parameters are:

1. **Depth of Cut (DOC):** It is the perpendicular distance between machined and unmachined surface. It is expressed in terms of **mm.**

2. **Feed rate (F):** It is the distance travelled by the tool per min or per revolution of the workpiece. It is expressed in **mm/min or mm/rev.**

3. **Spindle speed (S):** It is the number of revolutions made by the tool or work piece per minute. It is expressed in terms of **rpm.**

Lathe: A Lathe is a machine tool which is used to remove unwanted metals from the rotating work piece to give desired shape and size.

Also known as "Centre Lathe"

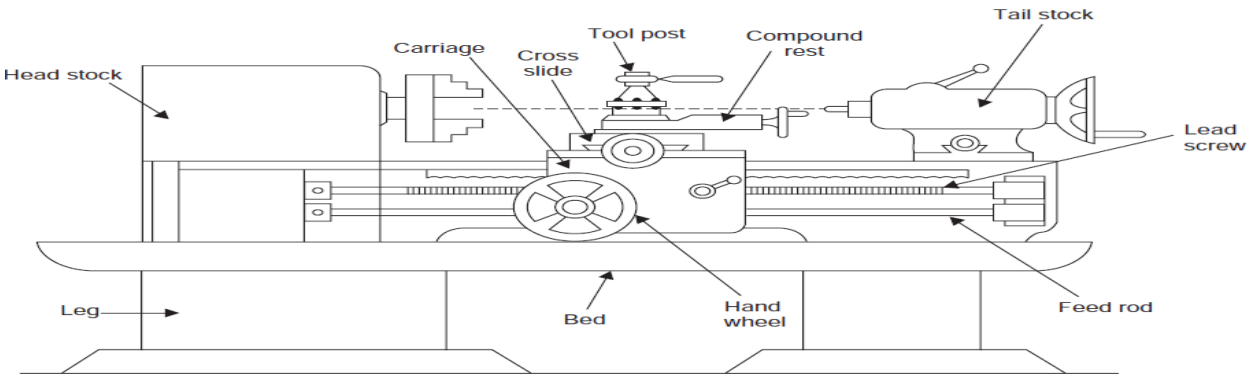

Figure: Lathe Machine Tool

Lathe Operations includes the following:

- Turning
- Facing
- Knurling
- Thread Cutting and
- Taper turning (Swiveling Compound Rest Method)

1. Turning:

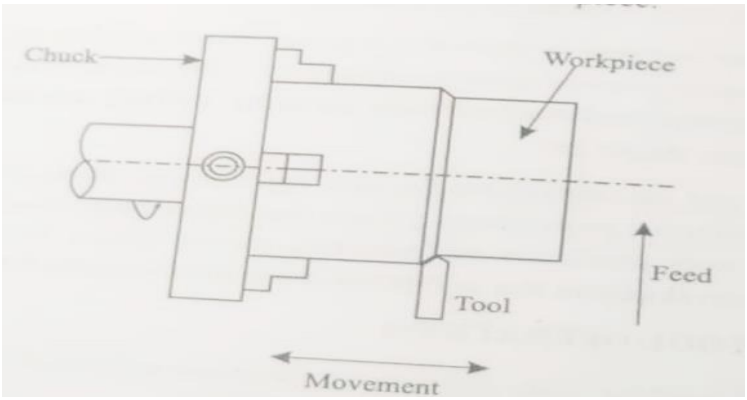

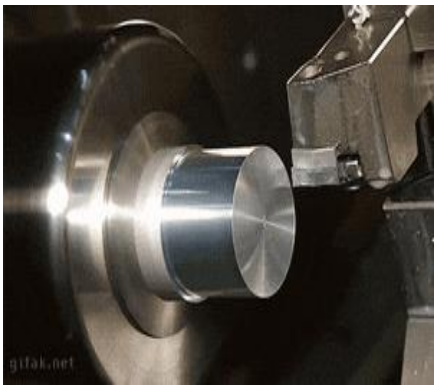

Figure: Turning

Figure shows the working of plain turning operation in which the workpiece is made to rotate in between two centre and rigidly held cutting tool is moved against the workpiece in parallel to the axis of the workpiece. So that the diameter of the workpiece decreases and length of the workpiece remain same. Will get cylindrical surface.

2. Facing:

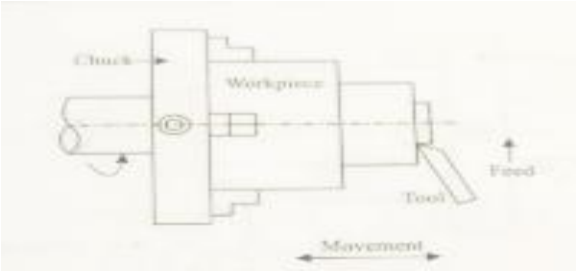

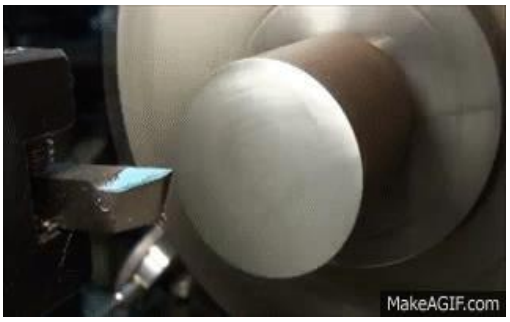

Figure: Facing

In this operation the cutting tool is moved perpendicular the axis of the workpiece so that diameter of the workpiece remain same whereas length of the workpiece reduces. Will get flat surface.

3. Knurling:

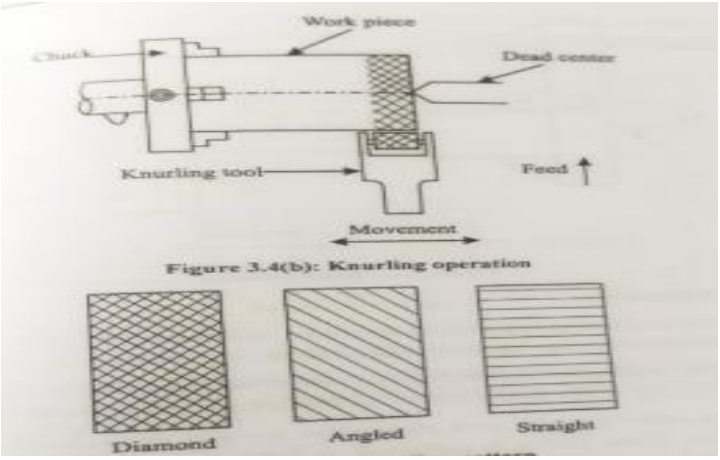

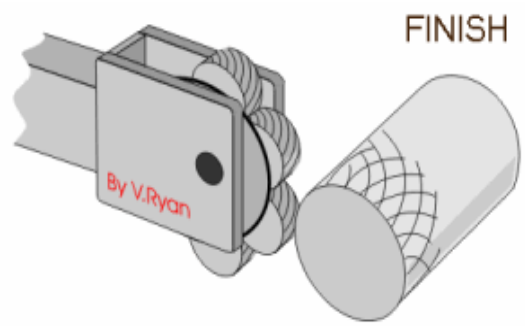

Figure: Knurling

The workpiece is made to rotate at lower speed between the two centres. The knurling tool is held rigidly on the tool post is moved parallel to the axis of the workpiece to get the segregated knurling surface. During this operation oil are used to get smooth segregated surface.

There are 3 knurling patterns are generally used which includes:

1. Angled Patter 2. Diamond Pattern 3. Straight Pattern - which are shown in the above diagram.

   Knurling operation are performed on the given workpiece for gripping purpose – used in vernier height gauge, screw gauge etc.

4. Thread Cutting:

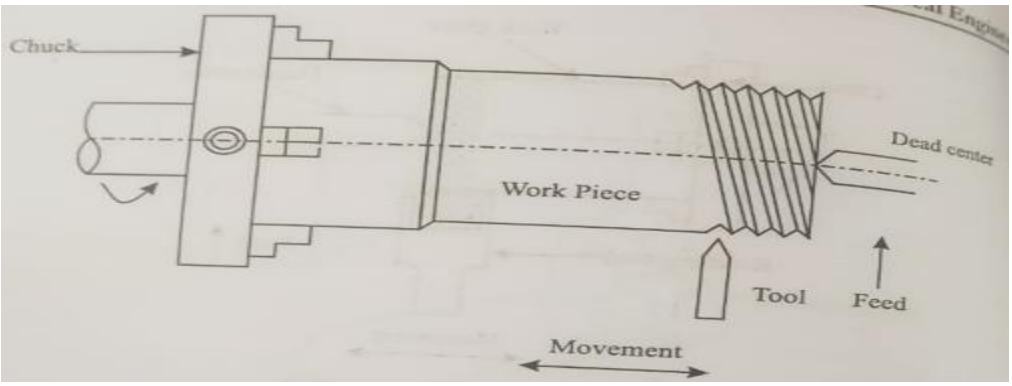

Figure: Thread Cutting

In this operation the threading cutting tool is moved automatically parallel to the axis of the rotating workpiece so that thread profile are generated on the workpiece. Length of the thread depends on the length of the tool travel against the rotating workpiece. To obtain uniform pitch between the thread cutting tool is moved automatically. During this operation oil is used to get smooth thread profile.

For V – thread:

Height of the thread: $h = P \times 0.61343$

Where P is pitch between the thread in mm.

Minor Diameter: $d = D - 2h$

Where D is Major diameter of thread in mm.

5. Taper turning:

This operation can be done in many ways which include

a. By Swiveling compound rest method

b. By offsetting the tail stock method

c. By taper turning method

a. By Swiveling compound rest method

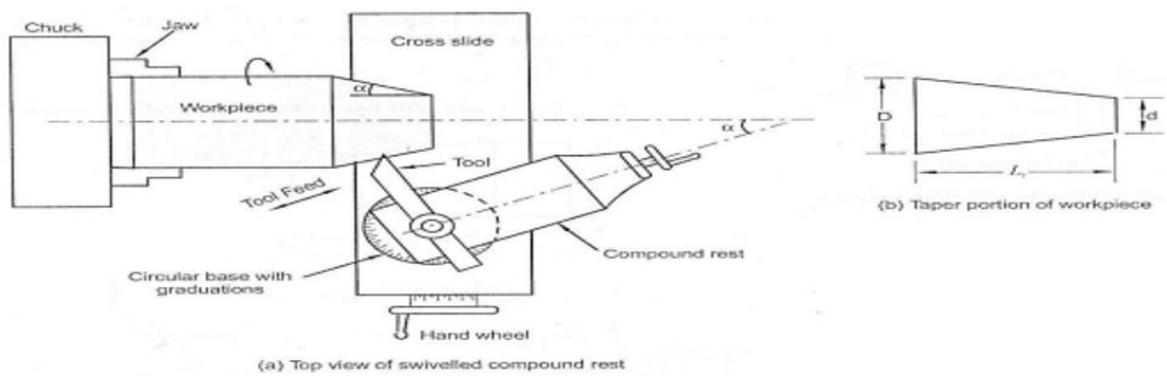

Figure : Taper turning by swiveling compound rest method.

In this method, the cutting tool is inclined at a taper angle (2α) by swiveling the compound rest and moved against the rotating workpiece so that taper surface is obtained on the given workpiece. Taper surface is obtained.

Taper angle is calculated by using the formal given below

$$\tan \alpha = \frac{D - d}{2l}$$

Where: α – Semi taper angle
D – Bigger diameter of taper
d - Smaller diameter of taper
l – length of the taper

Drilling is a metal cutting process carried out by a rotating cutting tool to make circular holes in solid materials. A liquid coolant is generally used while drilling to remove the heat of friction and obtain a better finish for the hole.

The tool which makes the hole is called a drill / twist drill.

Following are the drilling Operations:

1. Drilling
2. Boring
3. Reaming
4. Tapping
5. Counter Sinking and
6. Counter Boring.

1. Drilling:

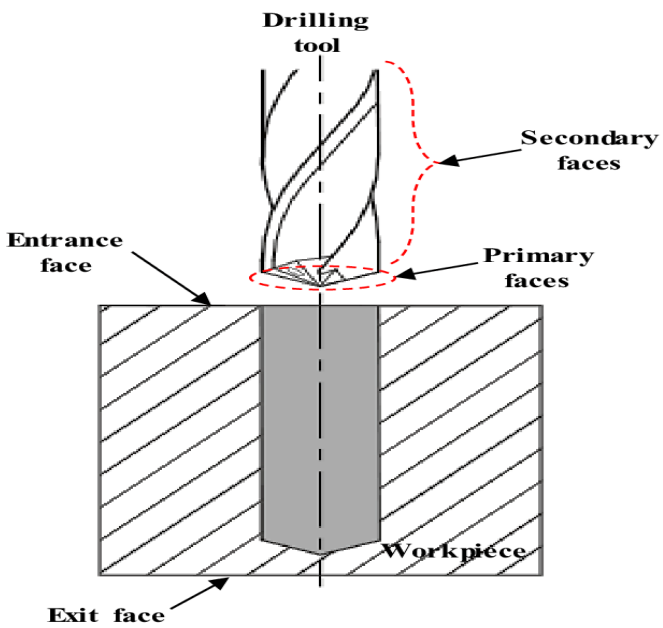

Figure: Drilling operation

Above figure shows the working principle of drilling operation in which the solid work piece is rigidly fixed on work holding device (bench vice) on the work table. The rotating drill bit is moved against the solid work piece to produce a cylindrical hole. Depth of the hole depends on the length of the tool travel and diameter of the hole depends on the diameter of the drill bit used.

2. Boring

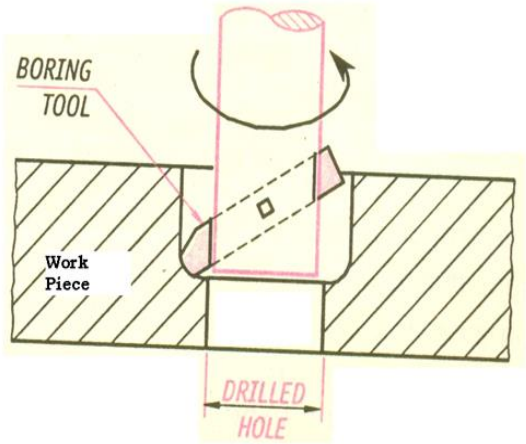

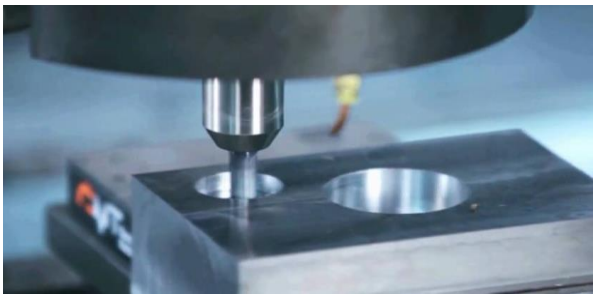

Figure: Boring operation

This operation is performed on the solid work piece material when the required size of the drill bit is not available. It is an enlarging a previously drilled hole. In this operation, drilled hole is done with the nearest drill bit and by using boring tool the drilled hole is enlarged to required size.

3. Reaming

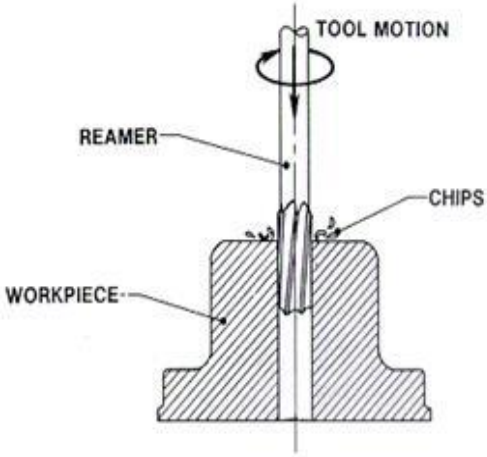

Figure: Reaming operation

In this operation, fine finish surface is obtained on the inner surface of the drilled hole. The reaming tool is passed inside the drilled hole so that the extra projected material in the drilled hole is removed out of the solid surface.

This operation is performed for proper inserting of nut and bolt assembly.

4. Tapping

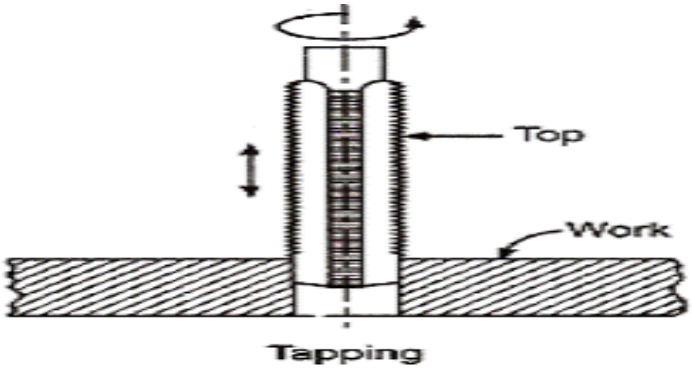

Figure: Tapping operation

Tapping operation is performed on previously drilled hole to get internal thread. During this operation, required size of the hole is drilled in a solid work piece by using drill bit and tapping tool is made to rotate manually inside the dilled hole so that internal thread is obtained inside the dilled hole. This operation is performed for inserting the bolt or screw during assembly operation.

5. Counter Sinking

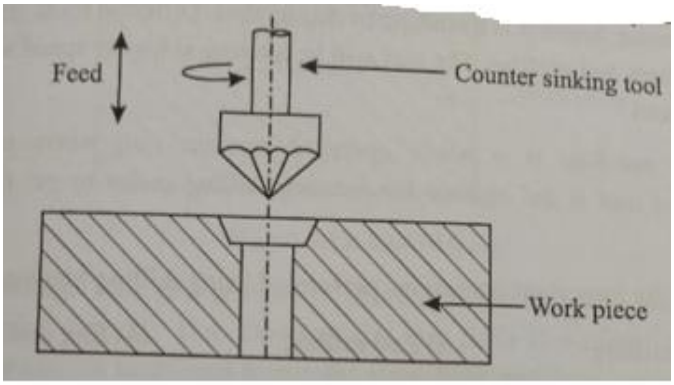

Figure: Counter Sinking operation

It is used to make hole into a conical shape. The tool used is called counter sinking tool, the angle of the standard tool is 90º. This is done to accommodate the counter sunk screw head such that there is no projection outside the surface of the work piece.

6. Counter Boring.

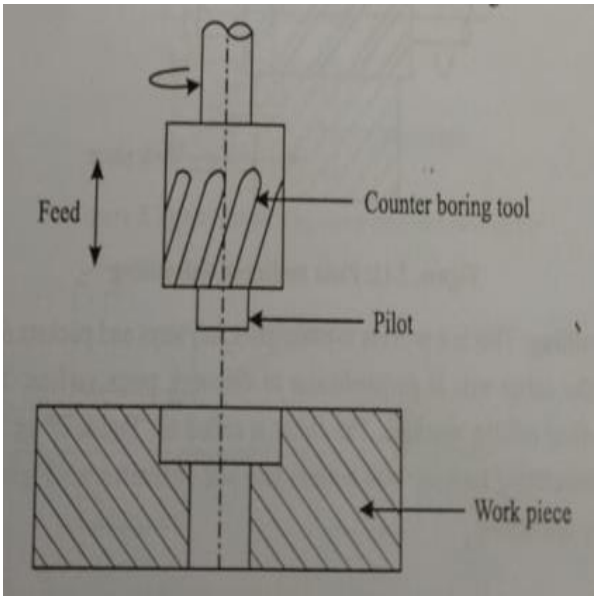

Figure: Counter Boring operation

It is used to increase the size of one end of a previously drilled hole to the required depth. The tool used here is called counter boring. The tool is provided with a small projection called pilot which guides the tool during counter boring. The diameter of the pilot and pre-drilled hole are same.

This operation is performed to accommodate the socket head of the spanner or act as seat to the bolt heads etc.

Introduction to Advanced Manufacturing Systems:

Introduction

In conventional machine tool has many disadvantages

- it is very difficult to do machining for thin and delicate workpiece
- will take lot of machining time
- rejection of part will occur due to manual operation
- better surface finish is difficult to obtain
- requires more man power to perform operation
- cannot satisfy the customer requirement on time

To overcome the above disadvantages advanced manufacturing systems are used.

Definition of Automation

Automation is a technology concerned with the application of mechanical, electronic, and computer-based systems to operate and control production.

OR

Automation is a process of using computer systems to assist in the planning, control, and management of production operations.

Types of Automation:

There are three types of automation

1. Fixed Automation
2. Flexible Automation
3. Programmable Automation

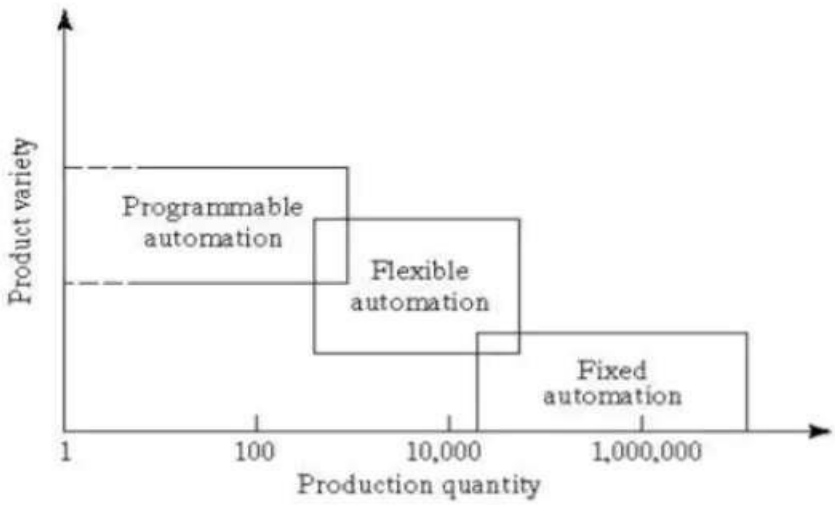

Figure: Types of Automation

1. Fixed Automation:

- As the name suggests, in this automation these sequences of operations are fixed and easier to perform.
- Fixed automation is used when the volume of production is high and product variety is low.
- This kind of automation is mostly suitable for Mass Production. Here the equipment is
- specially designed to produce a particular product. If the product changes the same equipment cannot be used.
- Fixed automation has very high production rates with less product variety.
- Overall investment is less in case of fixed automation when compared to other types of automation.

Example: Oil refineries, chemical processing, Assembly lines special purposemachines.

2. Flexible Automation:

- It is an extension of programmable automation.
- A flexible automation system is able of producing a large variety of parts with virtually no
- time lost for change over from one Part style to the next.
- It covers the advantages of both fixed and programmable automation.
- The production rates are medium in flexible automation.
- The entire system is flexible to deal with variety of products.

Example: Flexible manufacturing system

3. Programmable Automation:

- In this type of Automation Sequences of operations can be interchanged.
- The sequence of operations is Controlled by program of instructions. If the product is
- changed only program of instructions are changed but not the equipment.
- Programmable automation is used when production volume is low.
- This kind of automation is more suitable for Batch production. The Product variety will be high in this automation compared to fixed automation if the product changes, the same equipment can be used with minimal changes.

Example: NC Machines, Industrial Robots etc

Basic Elements of automated system:

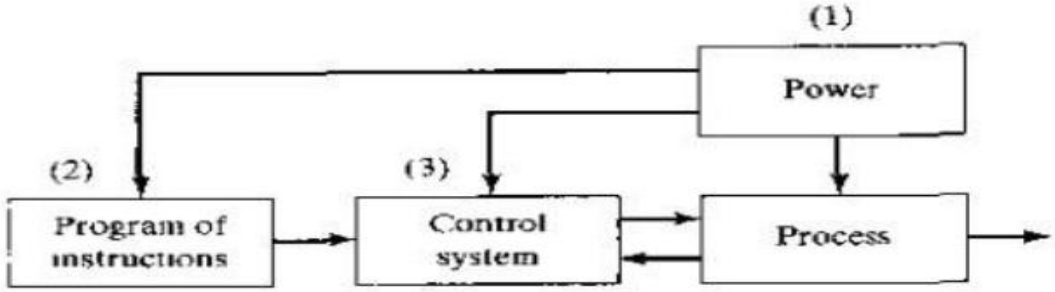

Figure: Basic elements of automated system.

1. **Power:** Generally automated system are powered by electric power supply to drive the mechanical system which are linked with electrical, computer and electronic system. Most of the automated system are powered by servo motor or stepper motor to control the accuracy and precision of the system to achieve the repeatability task. Thereby meeting the high production rate.

2. **Program of Instruction:** Most of the automated system are instructed by set of sequential manner which are coded by line-by-line through some standard logical manner. These instruction are written by standard code with a desired coordinate system to meet the quality of the product as per the company / customer design requirement.

3. **Control system:** Closed loop system is employed for an automated system to know the position and location of the object to achieve the accuracy and stability of the automated system. Mechatronics system which are closed in nature are used for any automated system with different types of sensor namely proximity sensor, optical encoder, range sensor etc to detect the object, speed of rotation, distance between the object surface and reference point. In addition, electronic control system is used to monitor and control the speed and position.

Process: In this part, actual processing is carried out in converting the raw material into finished part which involves primary and secondary manufacturing operation such as casting, forging, extrusion, bending, turning, drilling, shaping etc.

Numerical control (NC) System:

- Numerical control of machine tools may be defined as a method of automation in which various functions of machine tools are controlled by letters, numbers and symbols.
- Basically a NC machine runs on a program fed to it.
- The program consists of precise instructions about the methodology of manufacture as well as movements. For example, what tool is to be used, at what speed, at what feed and to move from which point to which point in what path.
- Since, the program is the controlling point for product manufacture, the machine becomes versatile and can be used for any part.
- All the functions of a NC machine tool are therefore controlled electronically, hydraulically or pneumatically

In NC machine tools, one or more of the following functions may be automatic.

a. Starting and stopping of machine tool spindle.
b. Controlling the spindle speed.
c. Positioning the tool tip at desired locations and guiding it along desired paths.
d. Controlling the rate of movement of tool tip (feed rate)
e. Changing of tools in the spindle.

CNC: Standard for **Computer Numerical Control**

CNC is defined as NC system whose machine control unit is based on **dedicated microcomputer** rather than on a **hard-wired controller**. Here, the **part program to produce the component** is **inputted and stored in the computer memory**.

CNC is often referred to by the term "soft-wired" NC.

Components of CNC system / General configuration of CNC system:

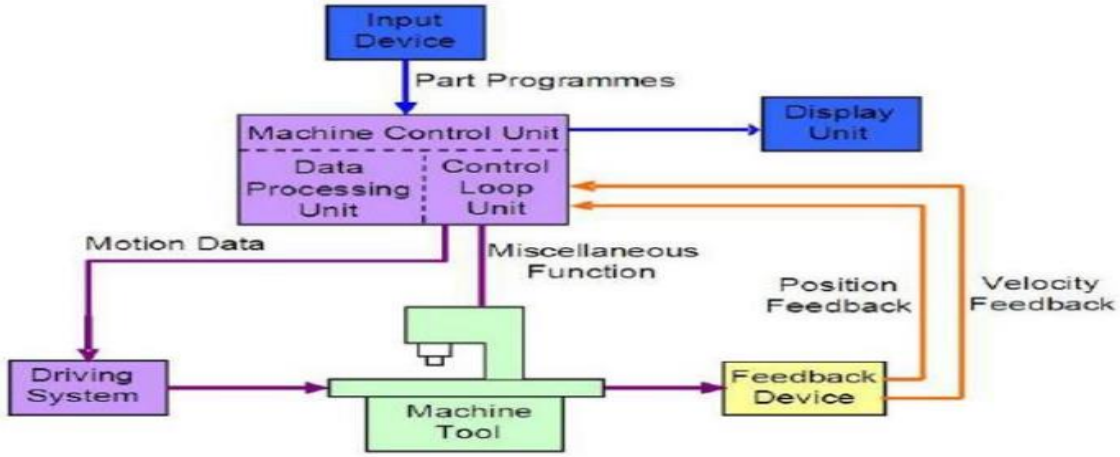

Figure: Components of CNC system

CNC system consists of 6 major components which includes:

1. Input Device
2. Machine Control Unit.
3. Machine Tool.
4. Driving system.
5. Feedback Devices
6. Display Unit.

1. Input Device :

it is the 1st element of CNC system in which the part program are fed into the minicomputer. These input device includes Floppy disk, USB flash drive, serial communication port on a CNC machine which transfer the set of instruction which are coded by letter, numerical, symbol into MCU.

2. Machine Control Unit (MCU):

It is the heart of the CNC system which consists of following two sub – units:

i. Data Processing Unit:

On receiving a part Programme, the DPU firstly interprets and encodes the part Programme into *internal machine codes.* The interpolator of the DPU then calculate the intermediate positions of the *motion in terms of BLU* (basic length unit) which is the *smallest unit length that can be handled by the controller.* The calculated *data are passed to CLU* for further action.

ii. Control Loop Unit:

The data from the DPU are converted into electrical signals in the CLU to control the *driving system* to perform the *required motions*. Other functions such as machine spindle ON/OFF, coolant ON/OFF, tool clamp ON/OFF are also controlled by this unit according to the *internal machine codes.*

3. Machine Tool:

Here the actual machining is done where the raw material is get converted into the required shape and size.

This can be any type of machine tool or equipment. In order to obtain high accuracy and repeatability, the design and make of the machine slide and the driving leadscrew of a CNC machine is of vital importance.

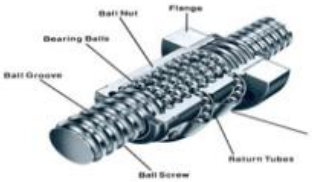

4. Driving system:

The driving system is an important component of a CNC machine as the accuracy and repeatability depend very much on the characteristics and performance of the driving system.

Three types of electrical motors are commonly used are:

a. DC Servo Motor
b. AC Servo Motor
c. Steeping Motor

5. Feedback Devices :

In order to have a CNC machine operating accurately, the positional values and speed of the axes need to be constantly updated. Two types of feed back devices are normally used:

a. Positional feed back device and

b. velocity feed back device.

6. Display Unit:

The Display Unit serves as an *interactive device* between the machine and the operator. When the machine is running, the Display Unit *displays the present status* such as the position of the machine slide, the spindle RPM, the feed rate, the part program, etc.

In an *advanced CNC machine*, the Display Unit can show the *graphics simulation of the tool path* so that part programmes can be verified before the actually machining.

Features of CNC System:

The following are the features of CNC System:

- Storage of more than one part program
- Various forms of program input
- Program editing at the machine tool
- Fixed cycles and programming subroutines
- Interpolation
- Positioning features for setup
- Cutter length and size compensation
- Acceleration and deceleration calculations
- Diagnostics

CNC Machines-Advantages:

Advantages:

- High Repeatability, Accurate and Precision
- Volume of production is very high
- Very efficient in producing Complex contours/surfaces with high reliability and precision.
- Flexibility in job change, automatic tool settings, that enables less scrap and will reduce idle time in production leads to high productivity.
- Quick response to the change in design that gives edge in the market.
- Product life cycle can be reduced.
- More safe, higher productivity and better quality
- Less paper work, faster prototype production, reduction in lead times

Disadvantages:

- Initial investment is high
- Skilled and trained operators is required to setup operation
- Computers and programming knowledge required
- Maintenance cost is more.

Applications of CNC:

- CNC machining is a manufacturing process used in a variety of industries, including **automotive, aerospace, construction, and agriculture.**
- CNC machining processes are suitable for a variety of **engineering materials,** including metals (such as **aluminum, brass, stainless steel, alloy steel,** etc.), **plastics** (such as PEEK, PTFE, nylon, etc.), **wood, foam, composite materials,** etc.