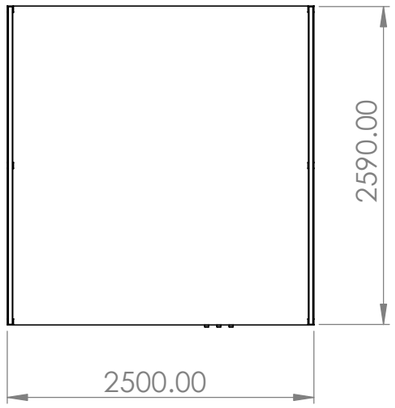

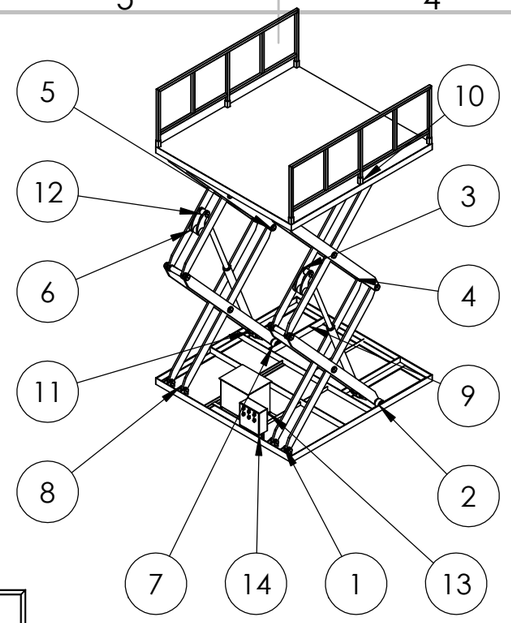

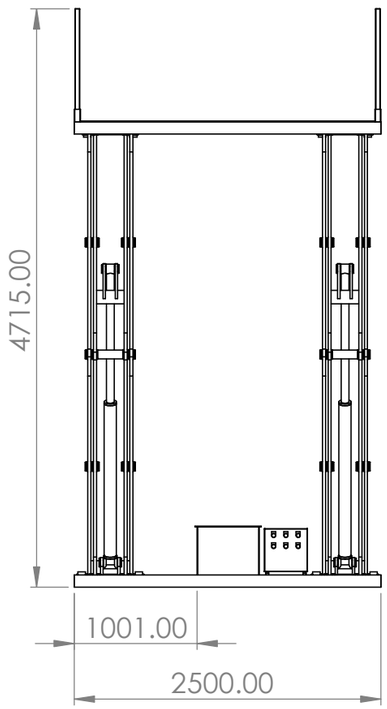

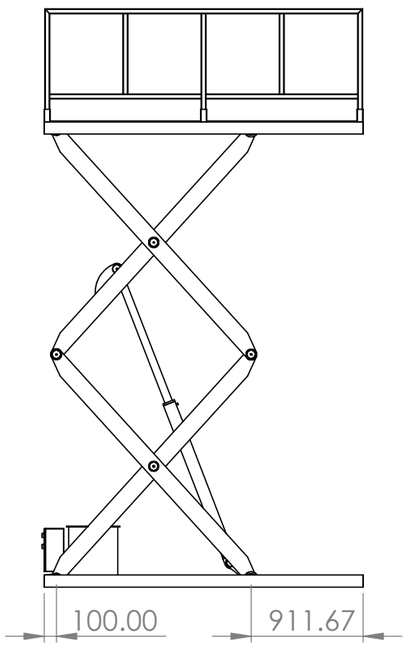

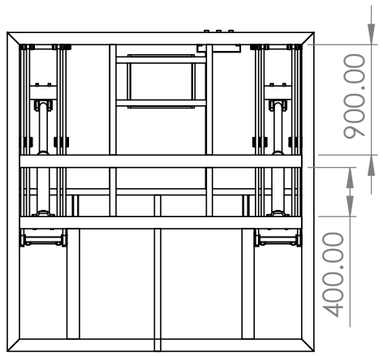

ITEM NO.	PART NUMBER	QTY.
1	KC_Inner Link Ass_16721-8	1
2	KC_Outer Link+Wheel Ass_16721-8	1
3	KC_Inner Link+Wheel Ass_16721-8	1
4	KC_Outer Link Ass_16721-8	1
5	KC_Outer Link Ass_16721-9	1
6	KC_Inner Link+Wheel Ass_16721-9	1
7	KC_Outer Link+Wheel Ass_16721-9	1
8	KC_Inner Link Ass_16721-9	1
9	KC_Base Frame_16721(Default_As Machined_)-4	1
10	KC_Top Frame_16721(Default_As Machined_)-4	1
11	KC_Cyl Body_16721-4	2
12	KC_Cyl Piston_16721-4	2
13	KC_Power Pack_16721-4	1
14	KC_Panel Box_16721-4	1

UNLESS OTHERWISE SPECIFIED:
DIMENSIONS ARE IN MILLIMETERS
SURFACE FINISH:
TOLERANCES:
LINEAR:
ANGULAR:

FINISH:

DEBURR AND BREAK SHARP EDGES

DO NOT SCALE DRAWING

REVISION

	NAME	SIGNATURE	DATE
DRAWN	S.MAHAVISHVA		
CHK'D			
APPV'D			
MFG			
Q.A			

MATERIAL:

WEIGHT:

TITLE:

HYDRALIC SCISSOR LIFT DRAFTING

DWG NO.

SCISSOR LIFT

A3

SCALE:1:50

SHEET 1 OF 3

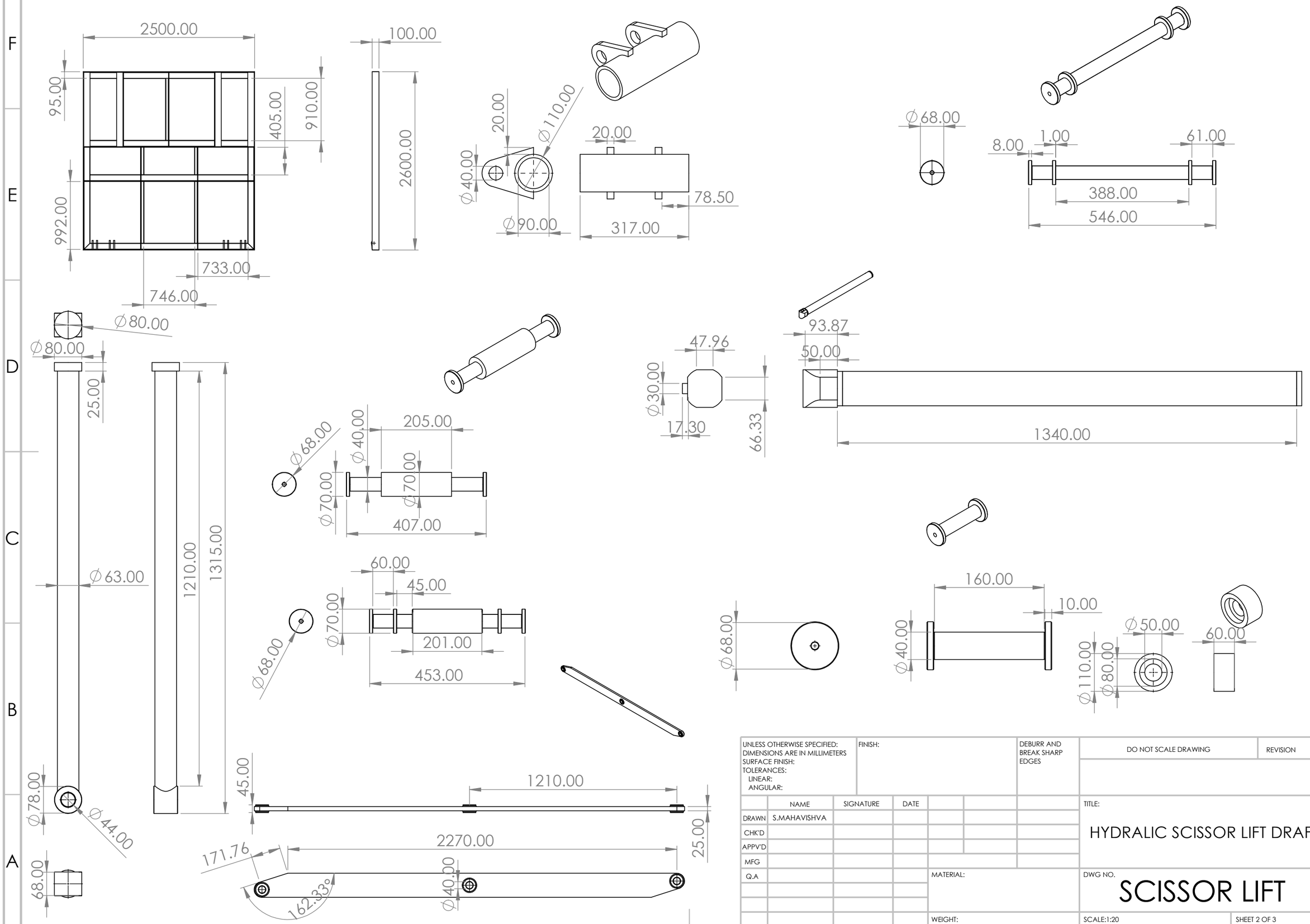

UNLESS OTHERWISE SPECIFIED: DIMENSIONS ARE IN MILLIMETERS SURFACE FINISH: TOLERANCES: LINEAR: ANGULAR:	FINISH:			DEBURR AND BREAK SHARP EDGES	DO NOT SCALE DRAWING	REVISION
	NAME	SIGNATURE	DATE		TITLE: HYDRALIC SCISSOR LIFT DRAFTING	
DRAWN	S.MAHAVISHVA					
CHK'D						
APPV'D						
MFG						
Q.A				MATERIAL:	DWG NO. SCISSOR LIFT	A3
				WEIGHT:	SCALE:1:20	SHEET 2 OF 3

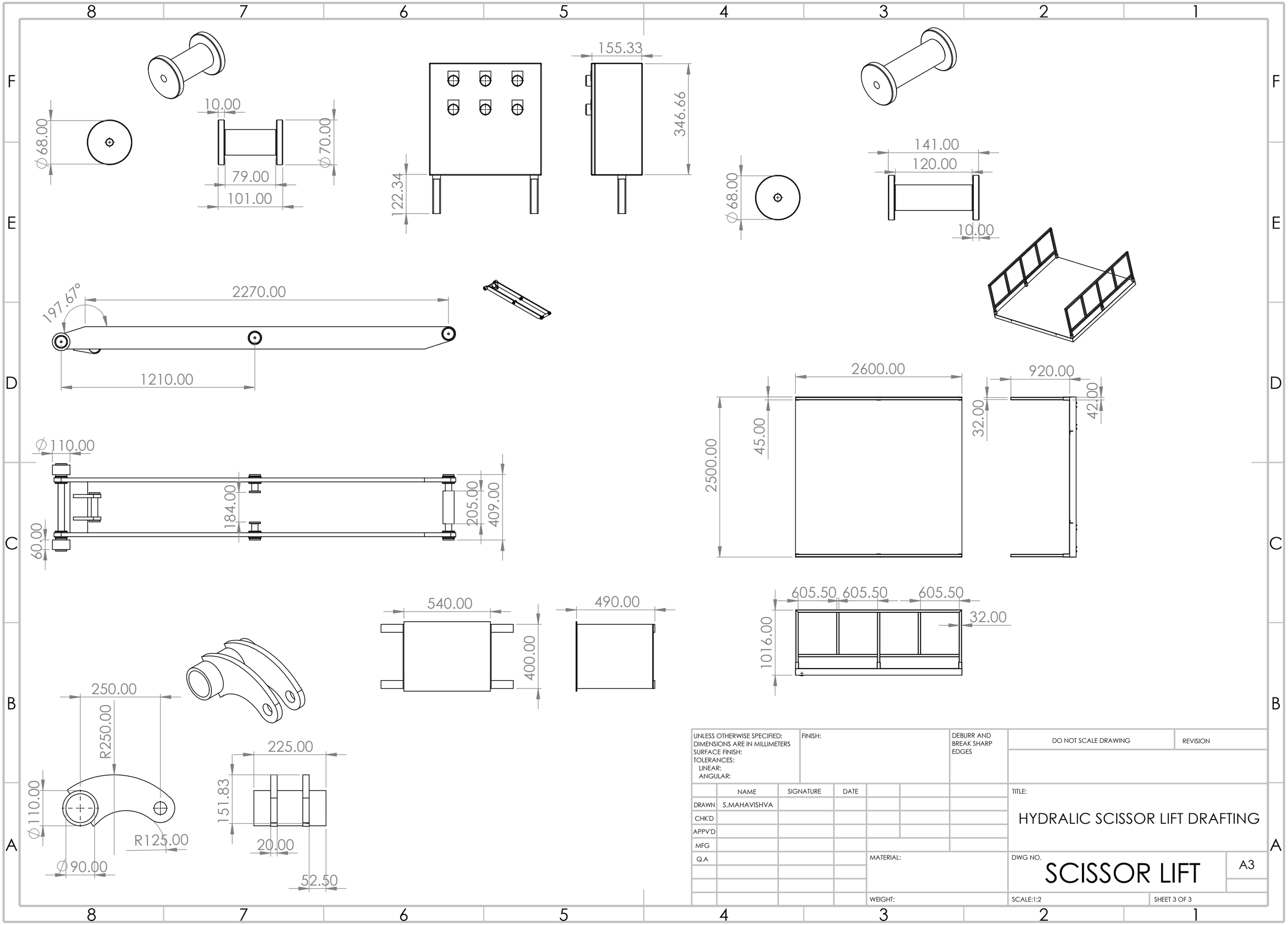
10.00
Ø68.00
Ø70.00
79.00
101.00
155.33
346.66
122.34
Ø68.00
141.00
120.00
10.00
197.67°
2270.00
1210.00
2600.00
920.00
42.00
32.00
45.00
2500.00
Ø110.00
184.00
205.00
409.00
60.00
540.00
490.00
400.00
605.50
605.50
605.50
32.00
1016.00
250.00
R250.00
Ø110.00
R125.00
Ø90.00
225.00
151.83
20.00
52.50
UNLESS OTHERWISE SPECIFIED:
DIMENSIONS ARE IN MILLIMETERS
SURFACE FINISH:
TOLERANCES:
LINEAR:
ANGULAR:
FINISH:
DEBURR AND BREAK SHARP EDGES
DO NOT SCALE DRAWING
REVISION
NAME
SIGNATURE
DATE
DRAWN
S.MAHAVISHVA
CHK'D
APPV'D
MFG
Q.A
MATERIAL:
WEIGHT:
TITLE:
HYDRALIC SCISSOR LIFT DRAFTING
DWG NO.
SCISSOR LIFT
A3
SCALE:1:2
SHEET 3 OF 3