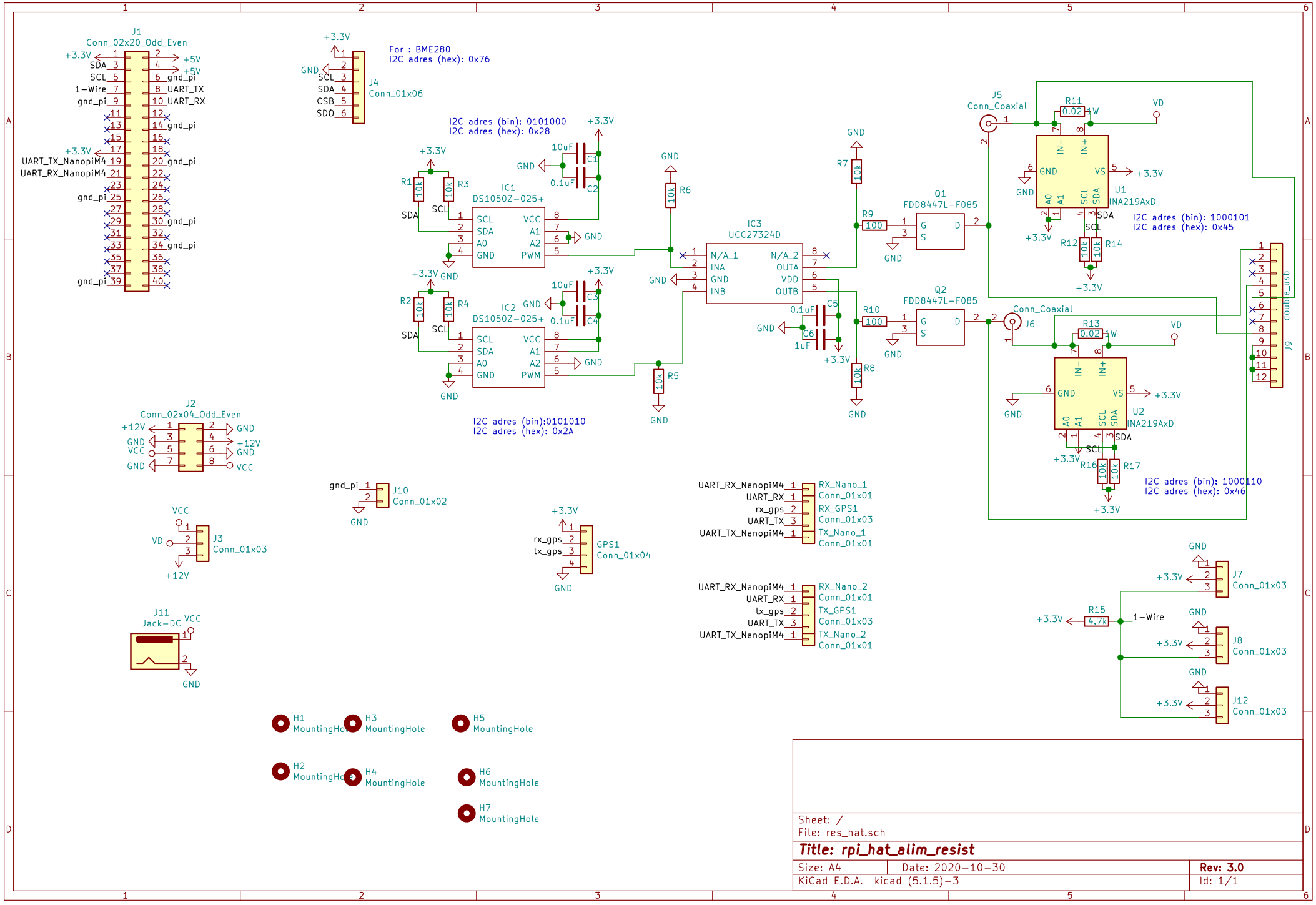

Sheet: /
File: res_hat.sch

Title: rpi_hat_alim_resist

Size: A4	Date: 2020-10-30	**Rev: 3.0**
KiCad E.D.A. kicad (5.1.5)-3		Id: 1/1