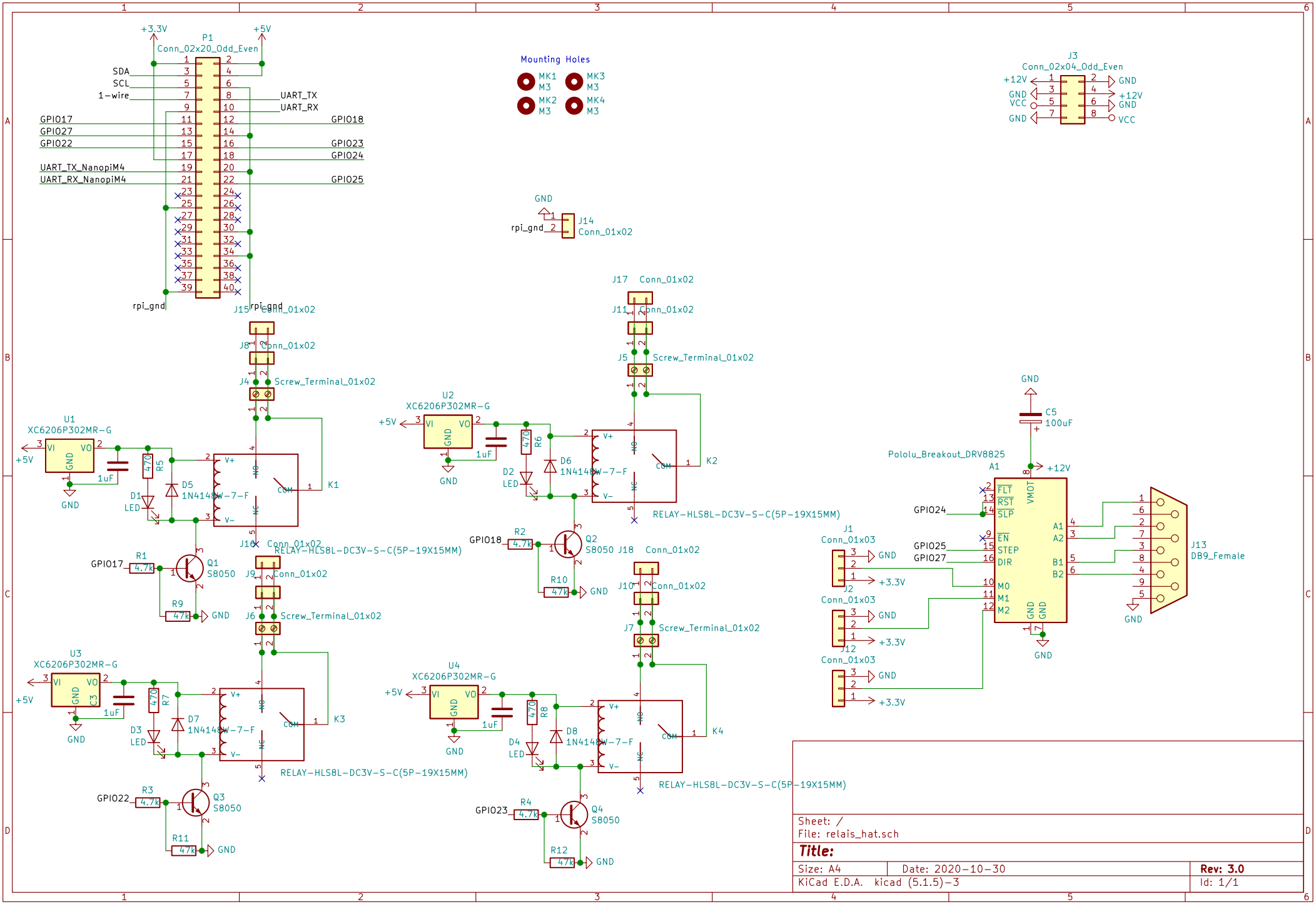
P1
Conn_02x20_Odd_Even
+3.3V
+5V
SDA
SCL
1-wire
UART_TX
UART_RX
GPIO17
GPIO27
GPIO22
GPIO18
GPIO23
GPIO24
UART_TX_NanopiM4
UART_RX_NanopiM4
GPIO25
rpi_gnd
Mounting Holes
MK1 M3
MK2 M3
MK3 M3
MK4 M3
J3
Conn_02x04_Odd_Even
+12V
GND
VCC
J14
Conn_01x02
J15 Conn_01x02
J8 Conn_01x02
J4 Screw_Terminal_01x02
U1
XC6206P302MR-G
VI
VO
GND
1uF
R5
470
D1
LED
D5
1N4148W-7-F
K1
RELAY-HLS8L-DC3V-S-C(5P-19X15MM)
R1
4.7k
GPIO17
Q1
S8050
R9
47k
J10 Conn_01x02
J9 Conn_01x02
J6 Screw_Terminal_01x02
U3
XC6206P302MR-G
R7
D3
LED
D7
1N4148W-7-F
K3
RELAY-HLS8L-DC3V-S-C(5P-19X15MM)
R3
4.7k
GPIO22
Q3
S8050
R11
47k
J17 Conn_01x02
J11 Conn_01x02
J5 Screw_Terminal_01x02
U2
XC6206P302MR-G
R6
D2
LED
D6
1N4148W-7-F
K2
RELAY-HLS8L-DC3V-S-C(5P-19X15MM)
R2
4.7k
GPIO18
Q2
S8050
R10
47k
J18 Conn_01x02
J10 Conn_01x02
J7 Screw_Terminal_01x02
U4
XC6206P302MR-G
R8
D4
LED
D8
1N4148W-7-F
K4
RELAY-HLS8L-DC3V-S-C(5P-19X15MM)
R4
4.7k
GPIO23
Q4
S8050
R12
47k
C5
100uF
Pololu_Breakout_DRV8825
A1
FLT
RST
SLP
EN
STEP
DIR
M0
M1
M2
VMOT
A1
A2
B1
B2
GND
GPIO24
GPIO25
GPIO27
J1
Conn_01x03
J2
Conn_01x03
J12
Conn_01x03
J13
DB9_Female
Sheet: /
File: relais_hat.sch
Title:
Size: A4
Date: 2020-10-30
Rev: 3.0
KiCad E.D.A. kicad (5.1.5)-3
Id: 1/1