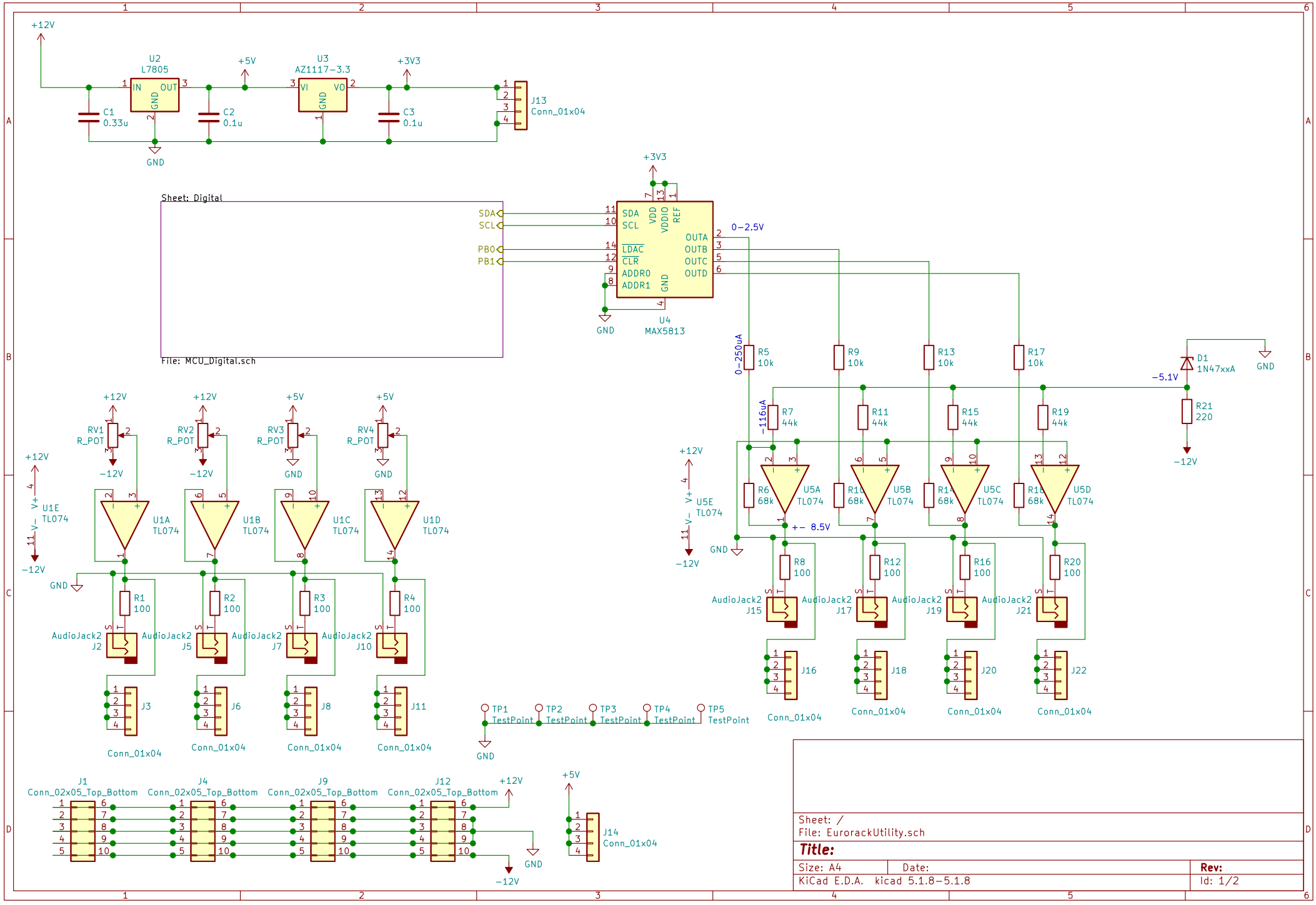

Sheet: /
File: EurorackUtility.sch

Title:

Size: A4	Date:	**Rev:**
KiCad E.D.A. kicad 5.1.8-5.1.8		Id: 1/2

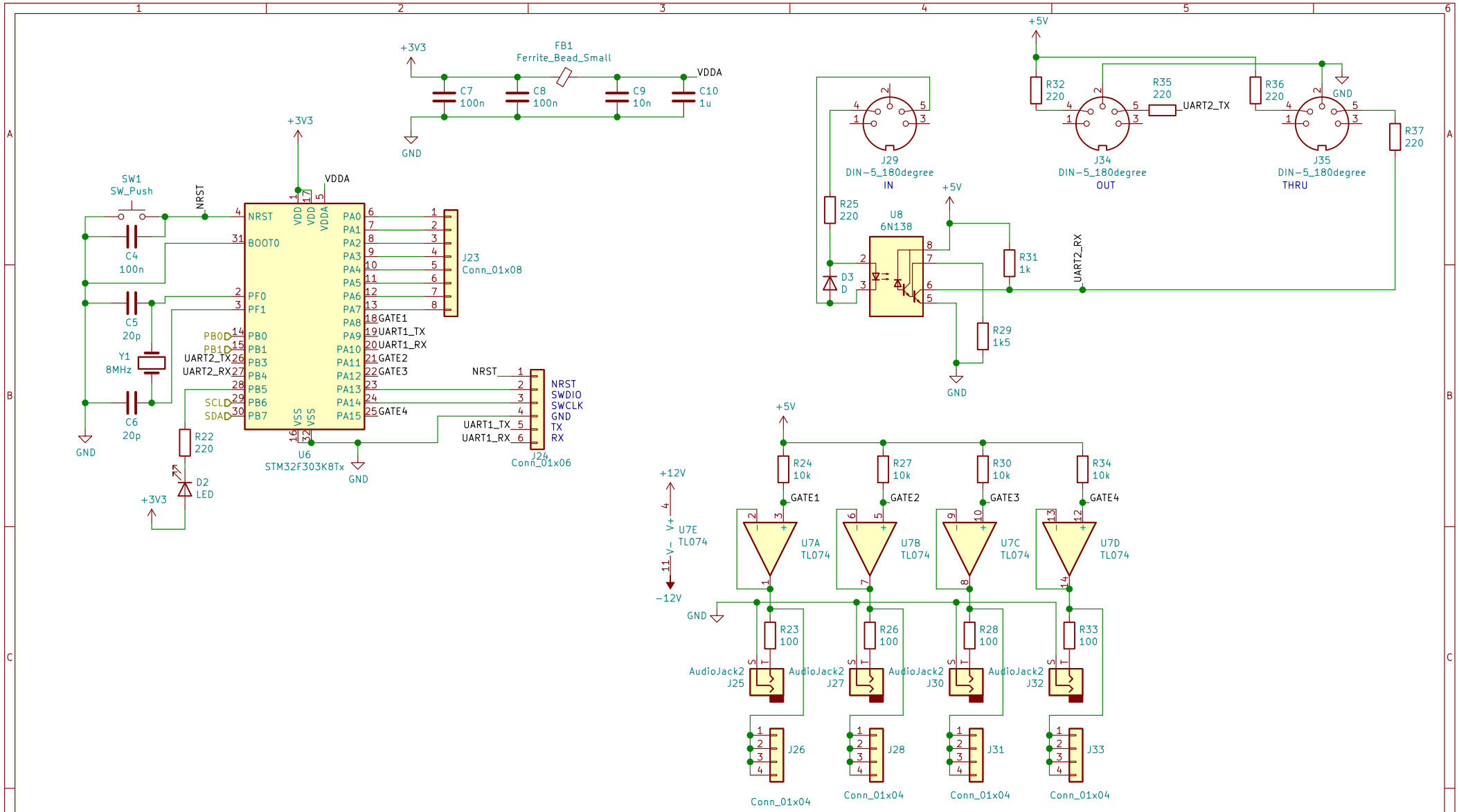

Sheet: /Digital/
File: MCU_Digital.sch

Title:

Size: A4	Date:	Rev:
KiCad E.D.A. kicad 5.1.8-5.1.8		Id: 2/2