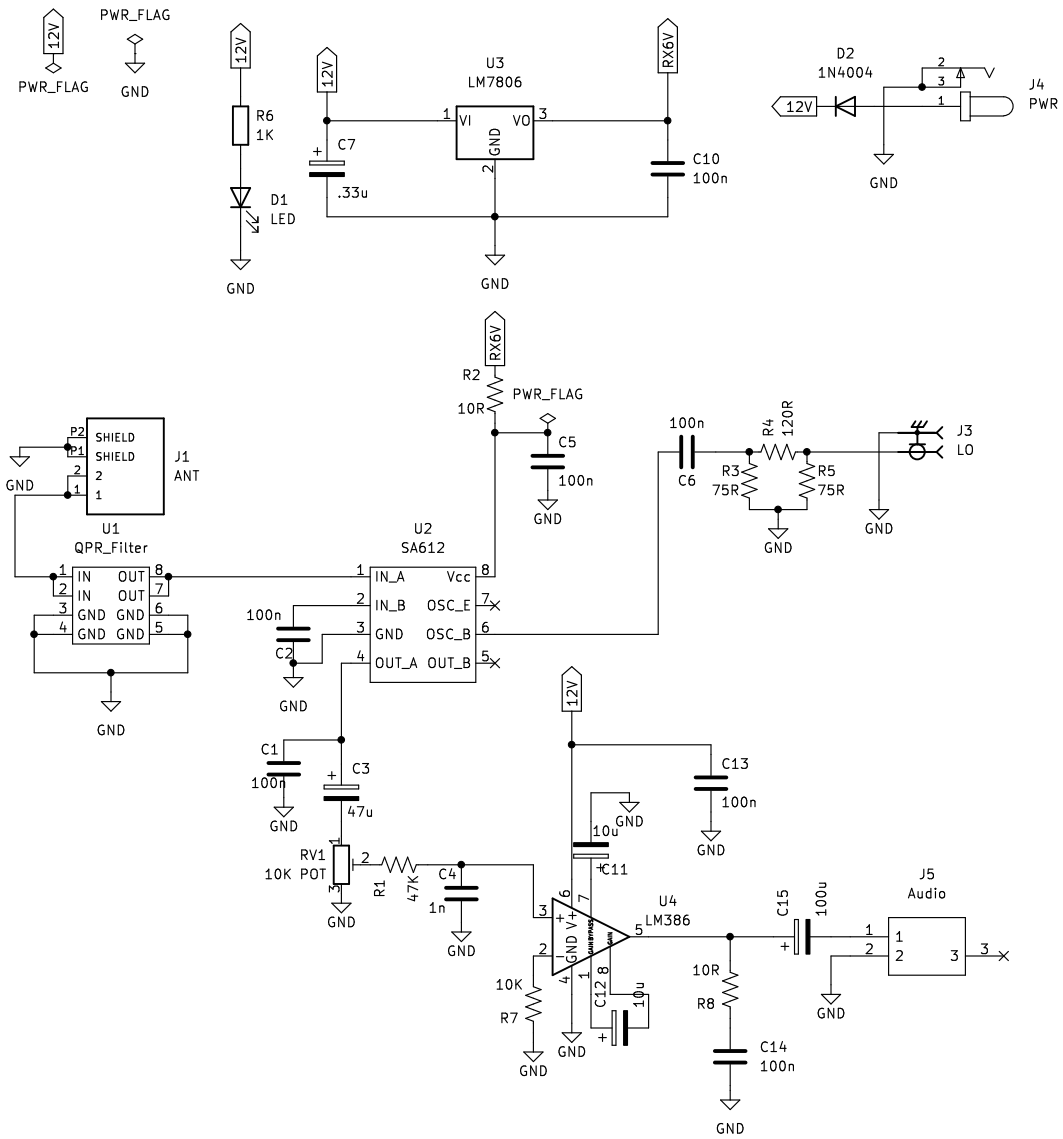

CP-002A-ND	Power barrel connector
486-3417-ND	3.5mm mono phone jack
CON-SMA-EDGE-S-ND	CONN SMA JACK STR EDGE MNT
A97553-ND	CONN BNC JACK R/A 50 OHM PCB
PTV09A-2020F-A103-ND	POT 10K OHM 1/20W CARBON LOG