Wave/496-000

October 13, 1999

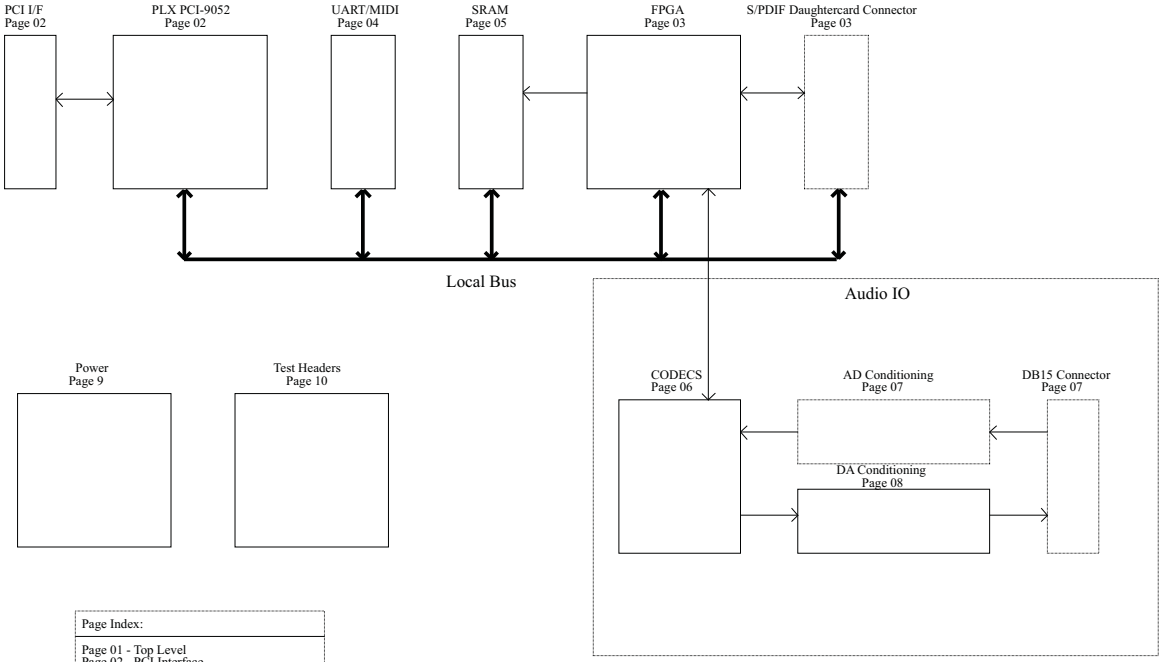

Page Index:

Page 01 - Top Level
Page 02 - PCI Interface
Page 03 - FPGA Control
Page 04 - UART/MIDI
Page 05 - SRAM
Page 06 - CODECS
Page 07 - AD Conditioning
Page 08 - DA Conditioning
Page 09 - Power
Page 10 - Test Headers
Page 11 - Revision History

Title	Wave/496-000 - Top Level	
Size: C	Document Number: XXX - XXXX - X	Rev: A1
Date: Tuesday, November 30, 1999	Sheet 1 of 11	

PCI Interface

Page 2/11

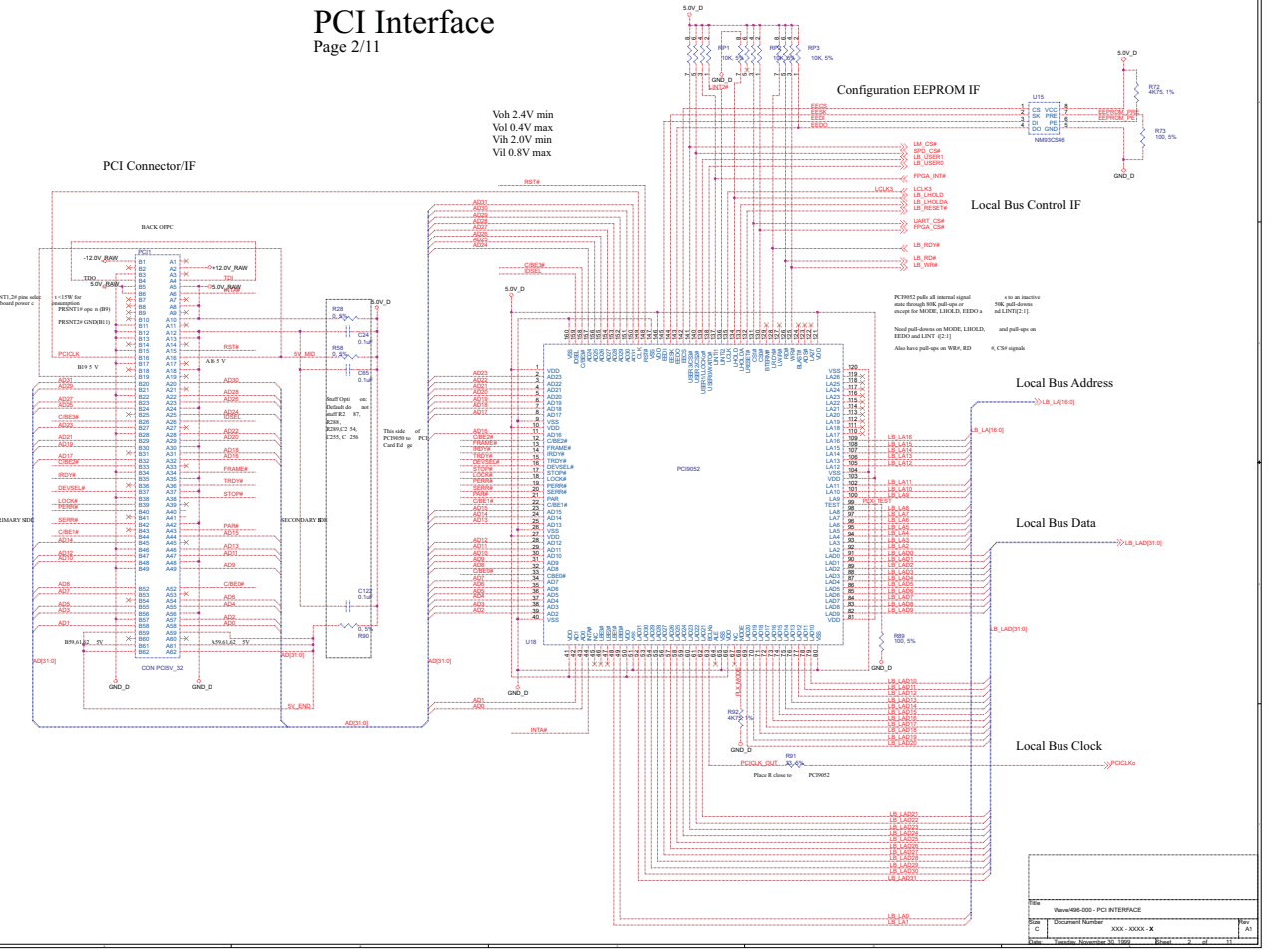

FPGA/Control ol

Page 3/11

VCCINT = 3.3V (6016A)

VCCIO = 3.3V

Vdc 1.7V min, 1.9V max
Vdc 0.7V min, 0.9V max
Vdc1.0V TTL min, 1.5V max min
Vdc0.0V TTL min, 0.2V max min

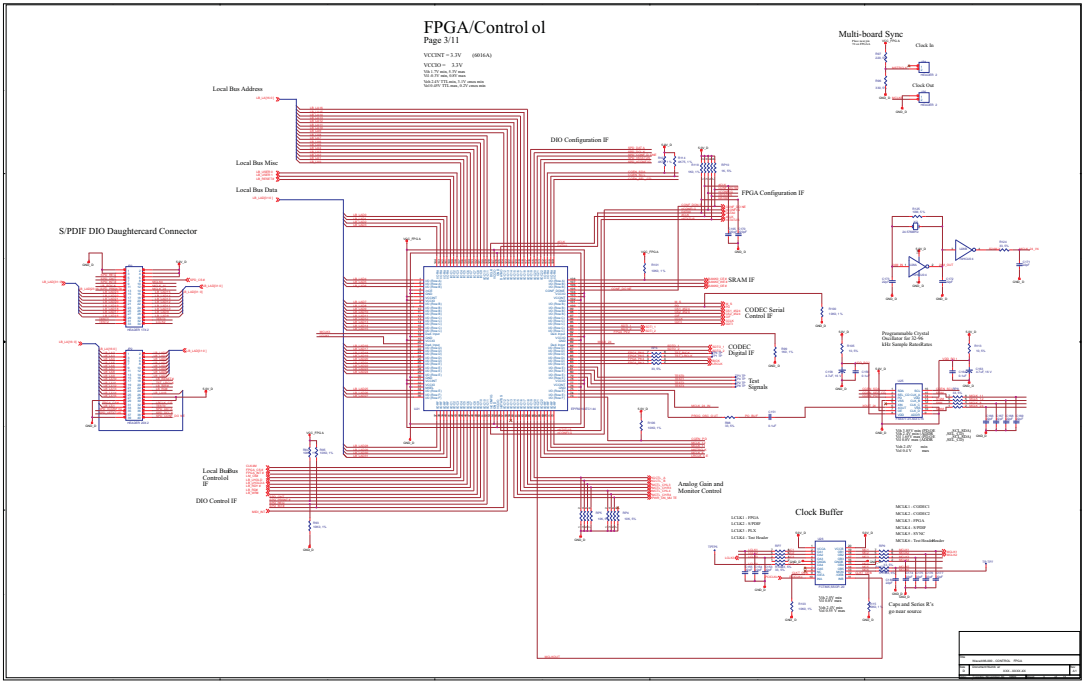

MIDI/UART

Page 4/11

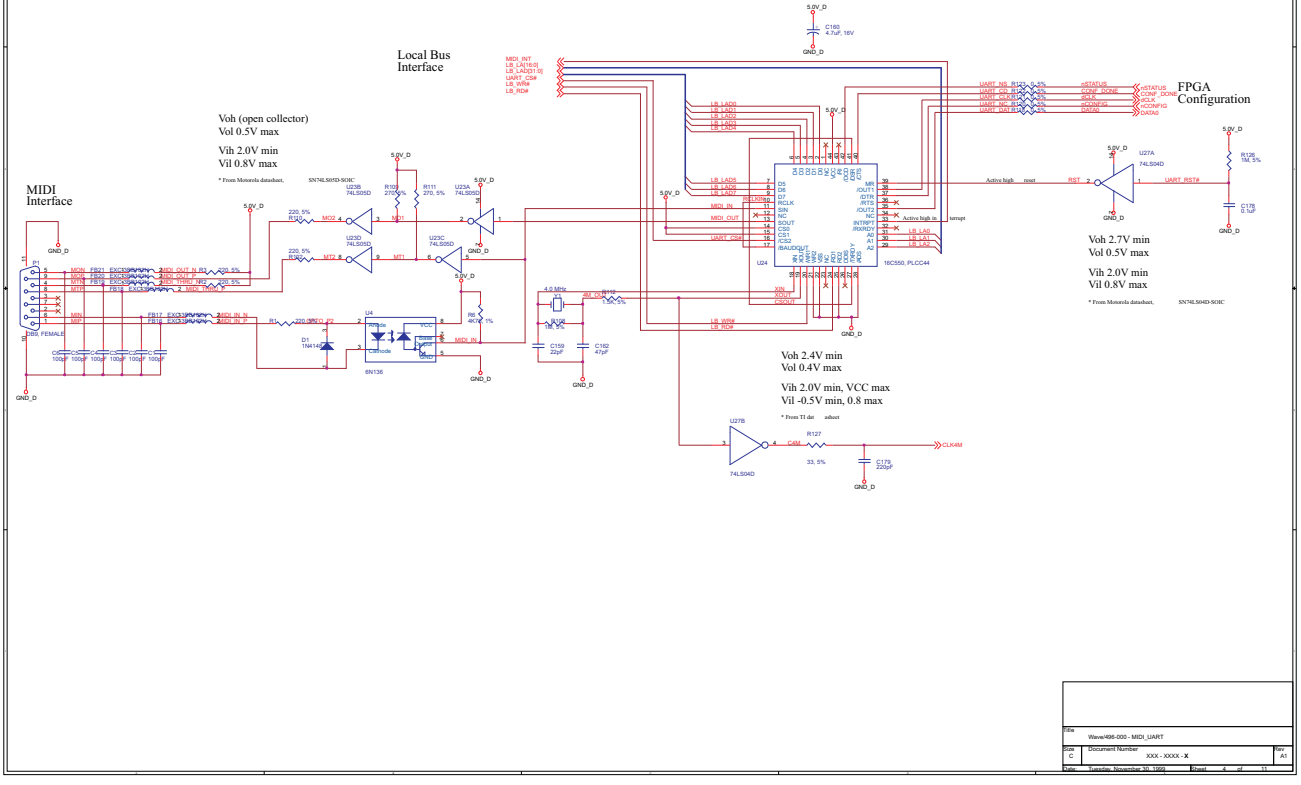

SRAM/Local Memory

Page 5/11

Local Bus Address and Data

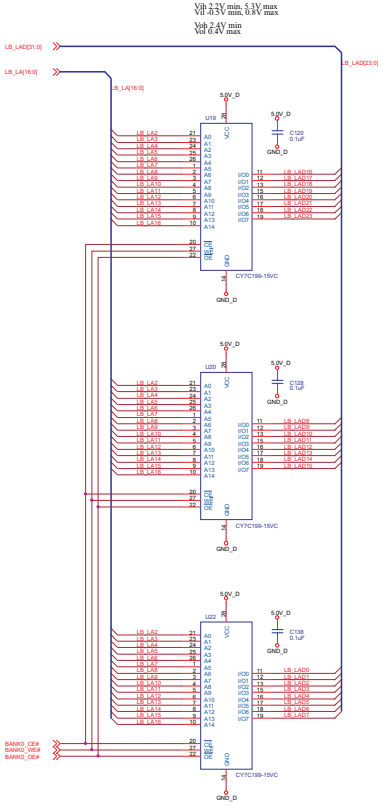

Local Bus Control

Title	Wave496-000 - MEMORY		
Size C	Document Number XXX - XXXX - X		Rev A1
Date: Tuesday, November 30, 1999	Sheet 5 of 11		

CODECs

Page 6/ 11

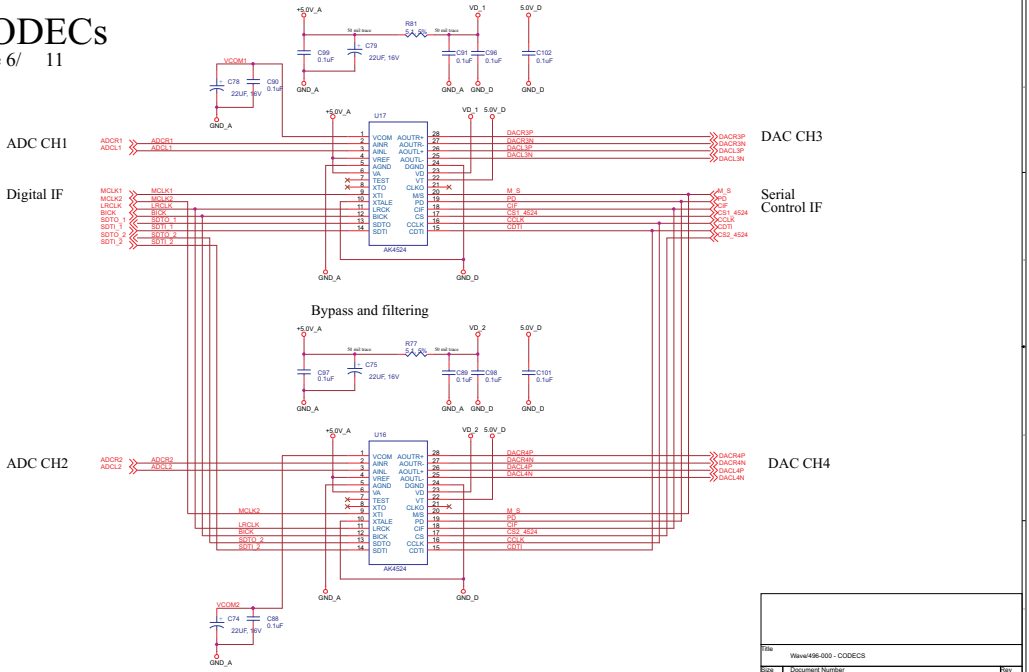

Title	Wavel496-000 - CODECS		
Size B	Document Number XXX - XXXX - X		Rev A1
Date: Tuesday, November 30, 1999		Sheet 6 of 11	

ADC Analog Conditioning

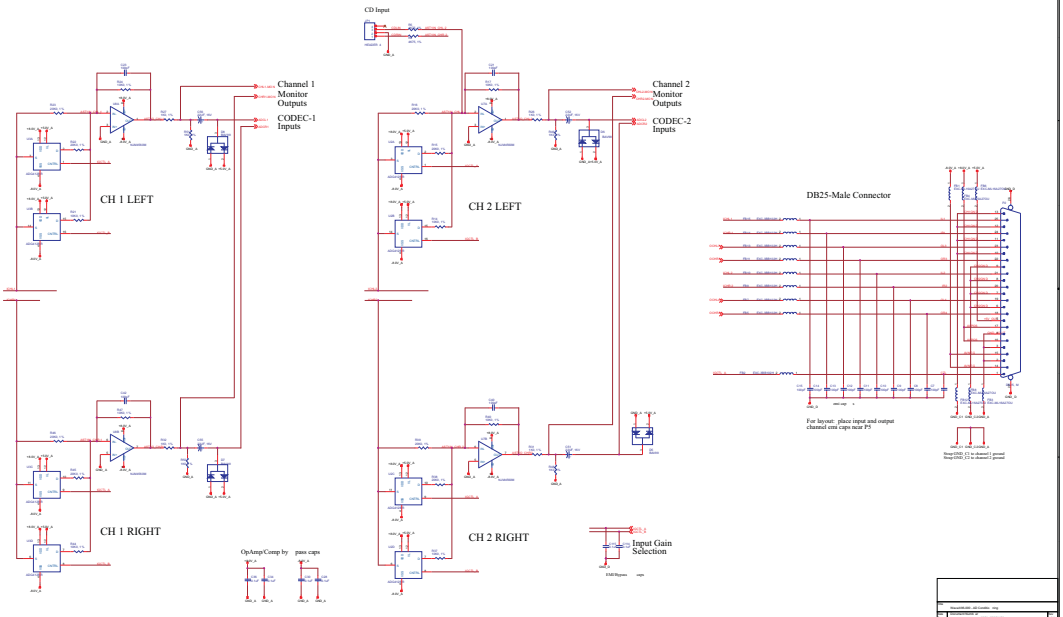

DAC Analog Conditioning

Page 8/11

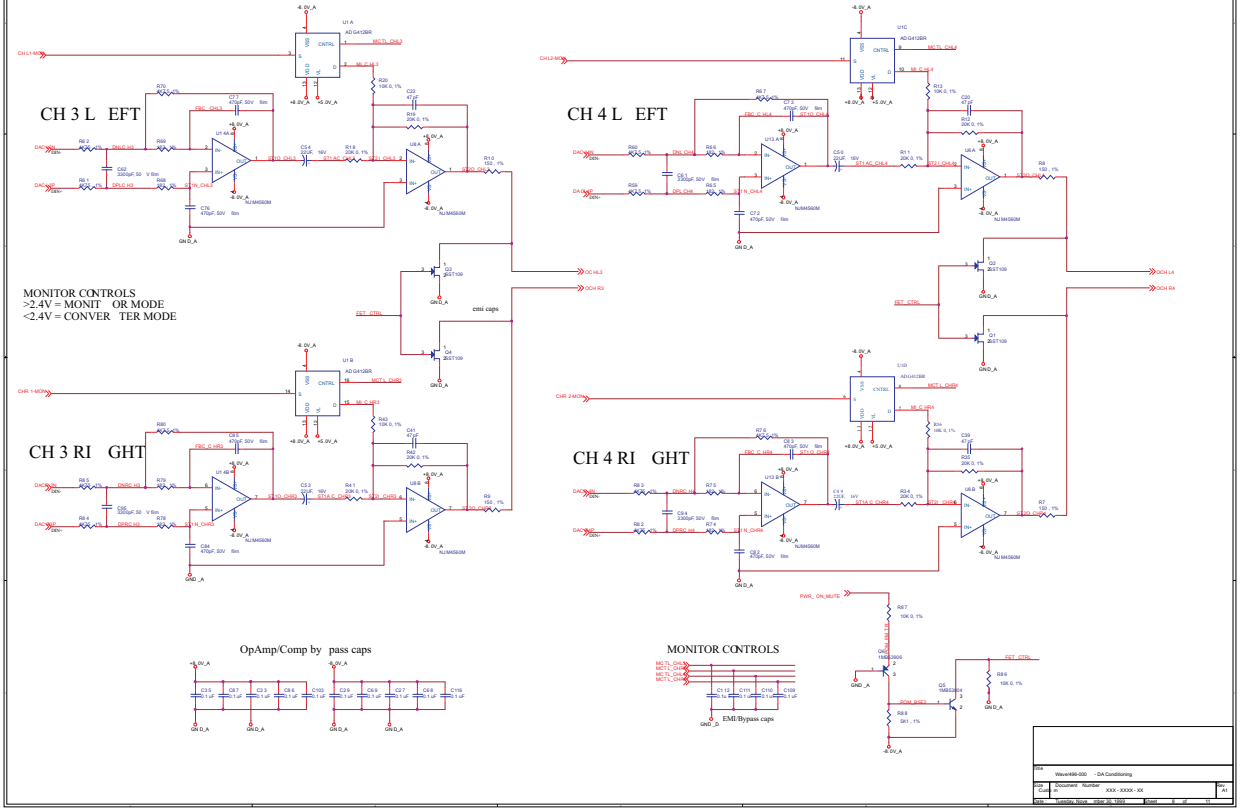

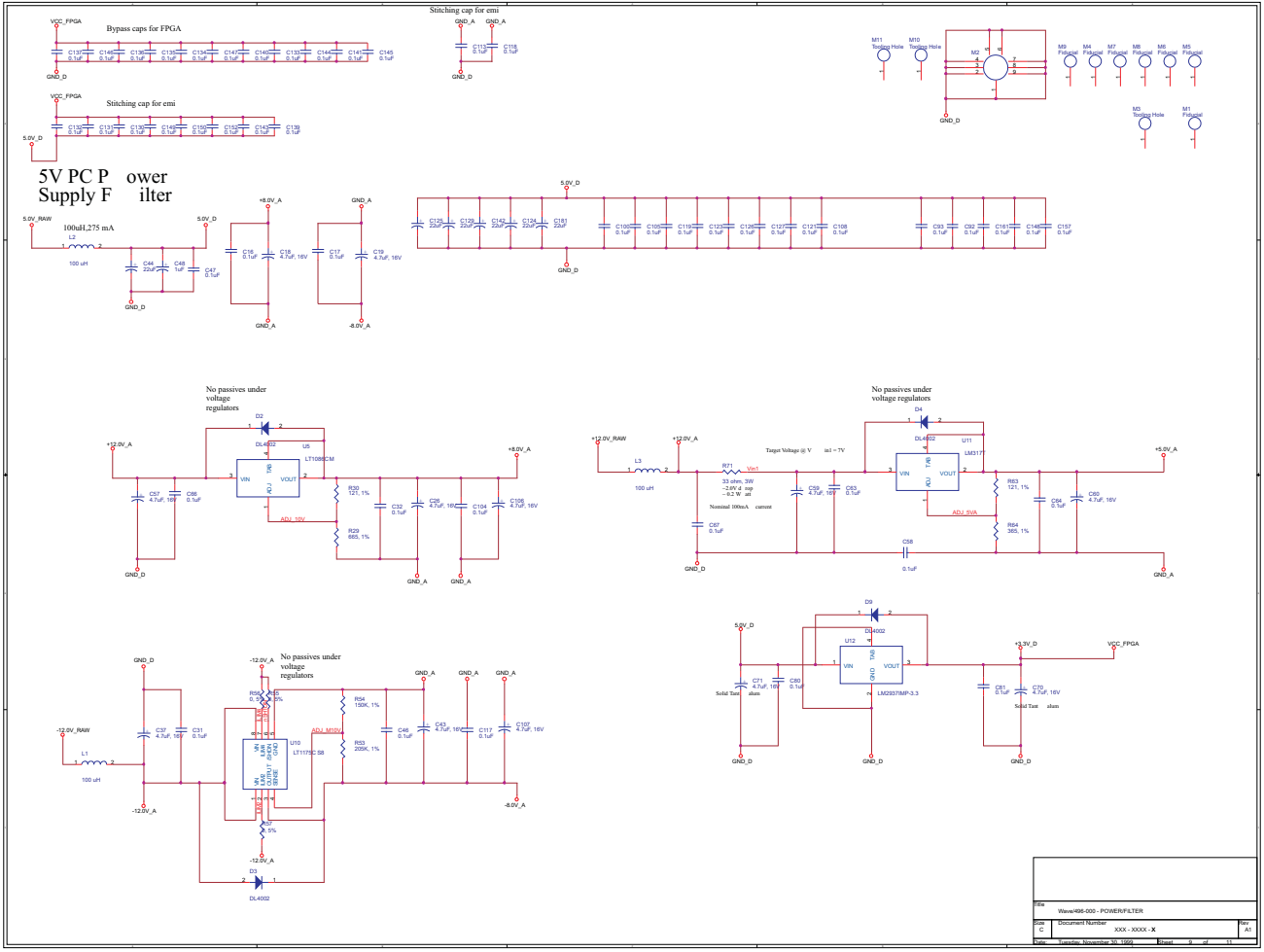

Bypass caps for FPGA
Stitching cap for emi
Stitching cap for emi
5V PC P ower
Supply F ilter
100uH,275 mA
No passives under voltage regulators
No passives under voltage regulators
No passives under voltage regulators
Target Voltage @ V in1 = 7V
Nominal 100mA current
Solid Tant alum
Solid Tant alum
Title
Wave/495-000 - POWER/FILTER
Size
C
Document Number
XXX - XXXX - X
Rev
A1
Date: Tuesday, November 30, 1999
Sheet 9 of 11

Test Headers

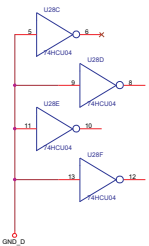

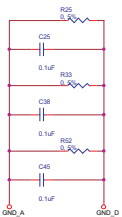

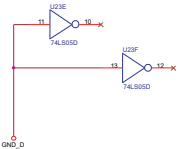

Spare gates

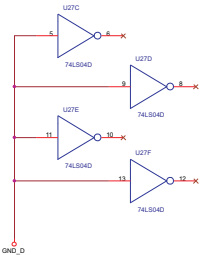

Title	Wave/496-000 - Test Headers	
Size: B	Document Number: XXX - XXXX - X	Rev: A1
Date: Tuesday, November 30, 1999	Sheet 10 of 11	

REVISION HISTORY

A1 - Wave/424-000: Schematic Review 03/03/99
A2 - Wave/424-000: Schematic Review 03/17/99
A3 - Wave/424-000: Freeze Design 04/05/99
A4 - Wav e/424-000: 256*Fs - 24.576MHz and 11.2896MHz Crystals only
A5 - Wave/424-000: Use FS6377-01 Prog. Osc. 5/10/99
A6 - Wave/ 424-000: Final clean-up and release for inital build 5/19/99
B1 - Wave/42 4-001: See ECO-001.xls for edits. Design review held 08/20/99
A1 - Wave/496-000: See WAV496.xls for design modifications

STUFF OPTIONS

Digital 5V from PCI connector	5V_D through R55 only	If EMI radiated around PCI connector, more 5V_D taps
	DNI - R73, R103	Install - R73, R103, C73, C128
Reference for Master Clock	P.O. Reference on base card only	Reference on base card or daughtercard
	DNI - R120,R136,R137,C157, C169,C177,C178,U27,Y3 Install - Y1	DNI - Y1 Install - R120,R136,R137,C157,C169,C177,C178,U27,Y3
Observability	Maximize for proto/debug	Minimize for production/emi testing
	Install - R116,R131,R132	DNI - R116,R131,R132
FPGA Configuration	Byte Blaster configuration	UART Configuration (production)
	DNI - R123,R124,R125,R126,130	Install - R123,R124,R125,R126,130
CODEC bypass caps	As per eval board, app note	Bypass filtered +5V_A to analog ground
	DNI - C78,C90 Install - C80,C92	DNI - C80,C92 Install - C78,C90
EMI stitching caps	Install - C131,C132,C140,C159, C158,C151,C147,C137,C114,C107	DNI - C131,C132,C140,C159, C158,C151,C147,C137,C114,C107
Ground Plane Jumpers	Install - R1,R51,R16,R68, R52,R71,R74,R17,R32,R61	