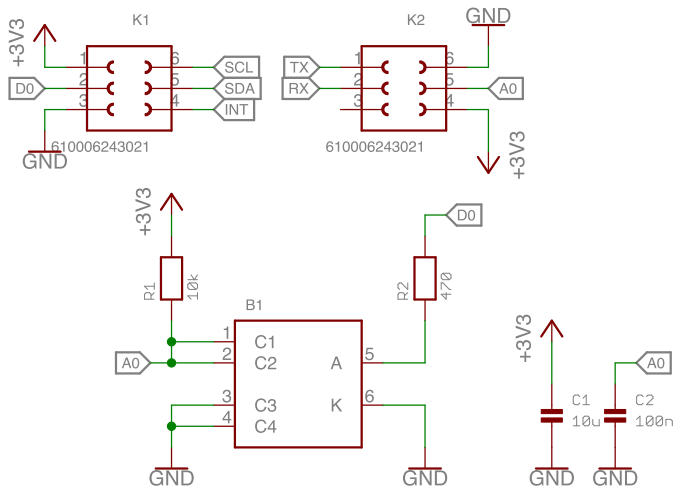

Dramco

IB2

Push Button

Jarne Van Mulders

design1

07/03/2022 18:18

Sheet: 1/1