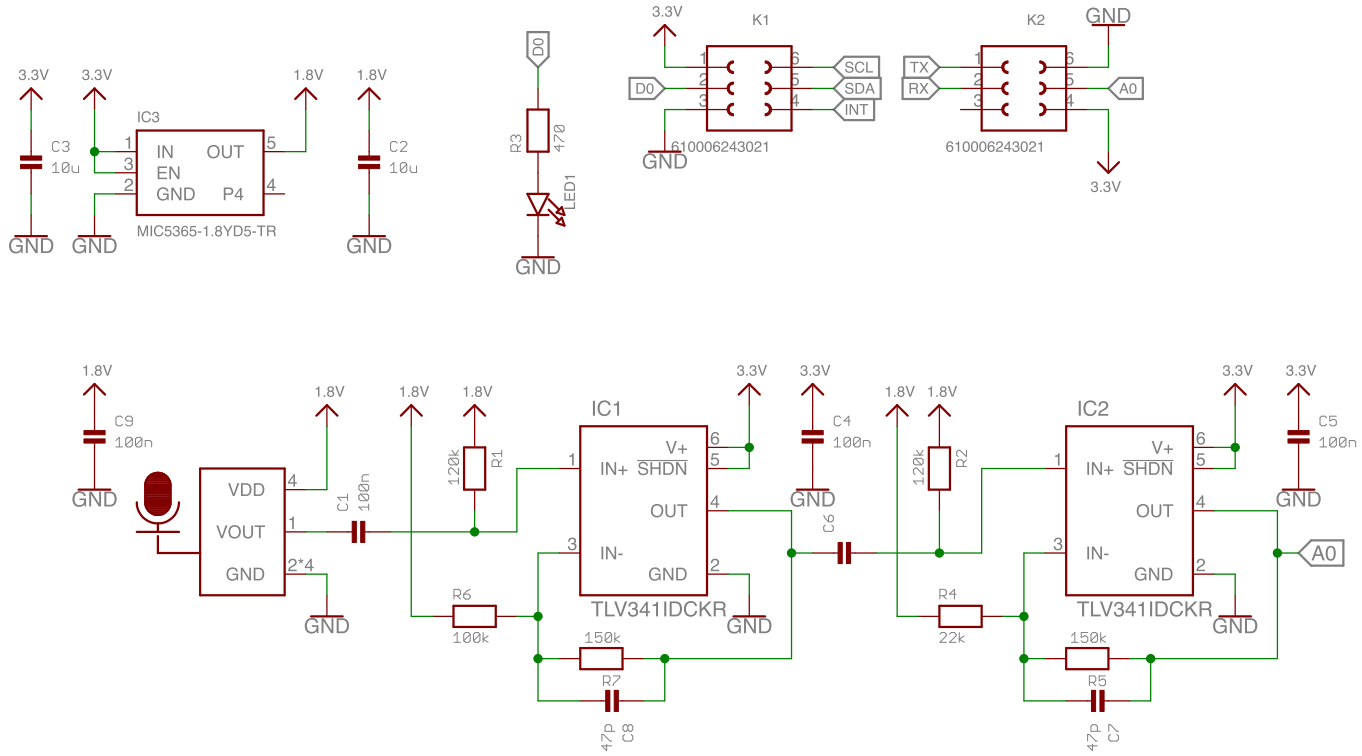

Dramco

IB2

Microphone Sensor

Jarne Van Mulders

design1

07/03/2022 18:42

Sheet: 1/1