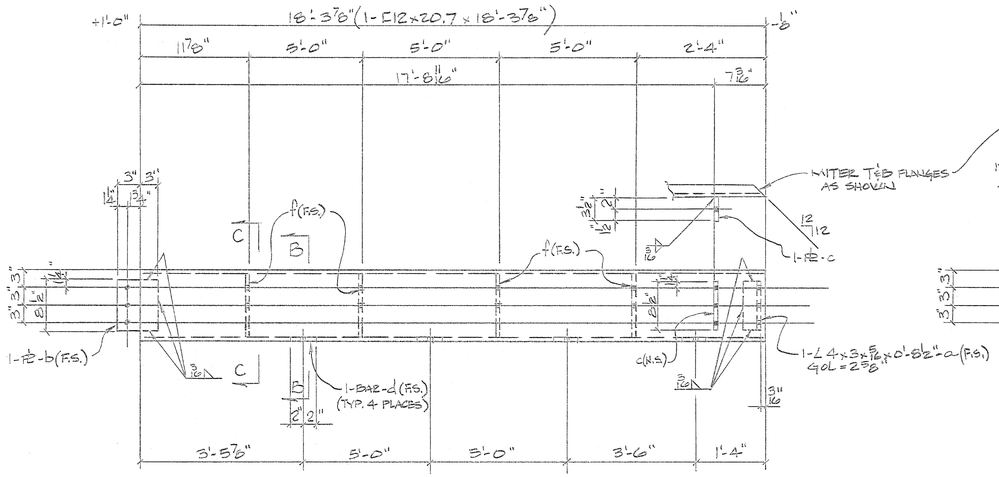

ONE ~ CHANNEL MK ~ 7B1

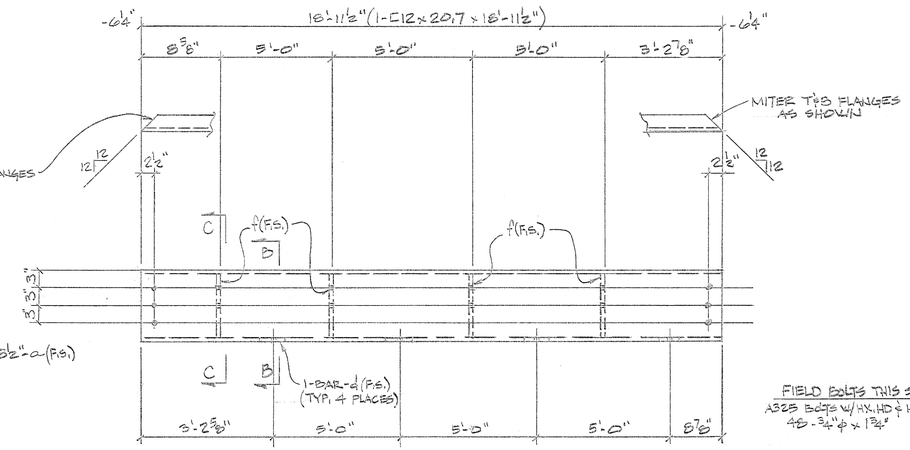

2~CHANNELS MK~7B4

FIELD BOLTS THIS SHEET
A325 BOLTS W/ HX. HD & HX. NUTS
48 - ¾"φ x 1¾"

SHOP BOLTS THIS SHEET
A325 BOLTS W/ HX. HD & HX. NUTS
2 - ¾"φ x 2"
4 - ¾"φ WASHER

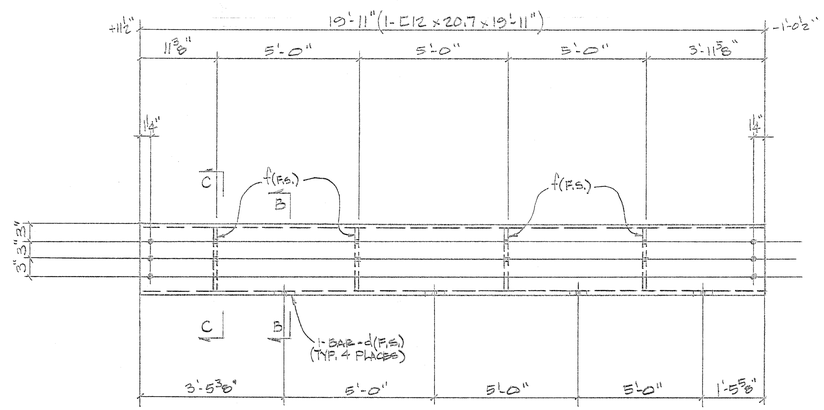

ONE ~ CHANNEL MK ~ 7B2

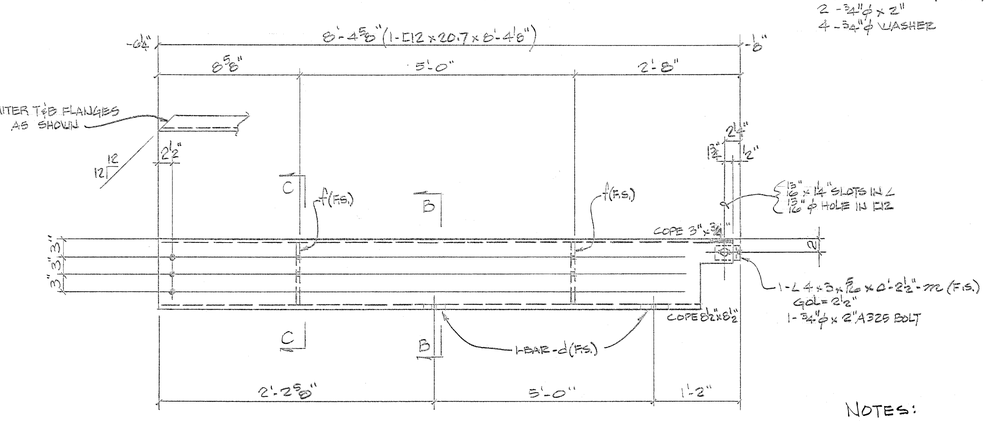

ONE ~ CHANNEL MK ~ 7B5

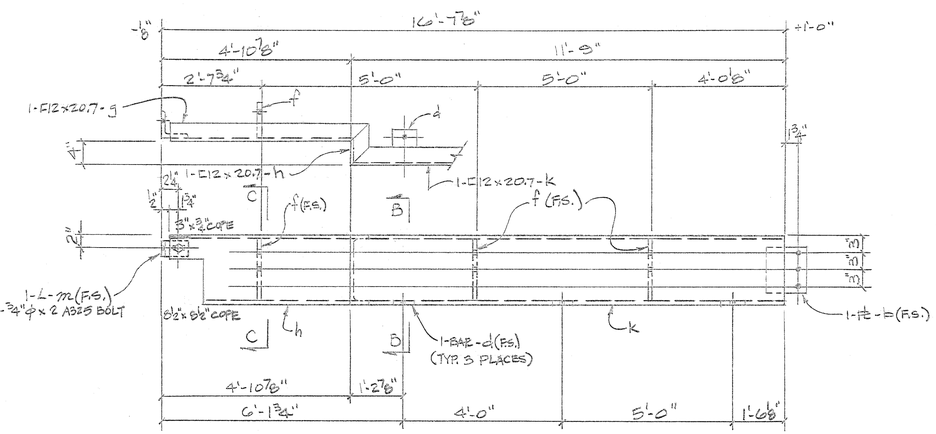

ONE ~ FRAME MK ~ 7B3

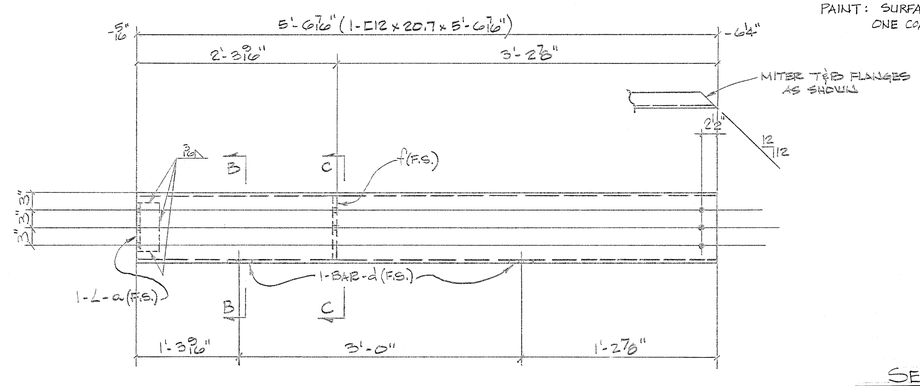

ONE ~ CHANNEL MK ~ 7B6

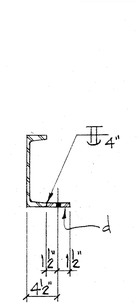

SECTION "B-B"

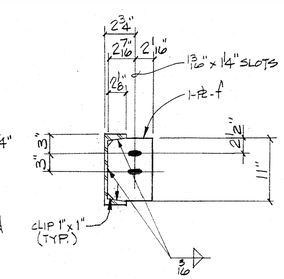

SECTION "C-C"

NOTES:
ALL HOLES TO BE 13/16" φ UNLESS NOTED
ALL WELDS TO BE E70XX
PAINT: SURFACE PREPARATION SP-6
ONE COAT (SHOP APPLIED) RED OXIDE PRIMER

BILL OF MATERIAL

MARK	QUAN.	DESCRIPTION	LENGTH FT.	LENGTH INCH	WEIGHT
7B1	ONE	C12 x 20.7	18	3⅞	379
a	1	∠4x3x5/16	0	8½	5
b	1	PL ¼ x 6	0	8½	4
c	1	PL ⅜ x 3½	0	8½	3
d	4	BAR ¾ x ⅜	0	4	5
f	4	PL ⅜ x 4½	0	11	21
7B2	ONE	C12 x 20.7	19	11	412
a	4	BAR			5
f	4	PL			21
7B3	ONE	FRAME			
d	3	BAR			4
f	3	PL			16
g	1	C12 x 20.7	5	1⅜	106
h	1	C12 x 20.7	0	7	12
k	1	C12 x 20.7	11	9	243
m	1	∠4x3x5/16	0	2½	1
7B4	2	C12 x 20.7	18	11½	785
d	8	BAR			10
f	8	PL			42
7B5	ONE	C12 x 20.7	8	4⅝	173
d	2	BAR			2
f	2	PL			10
m	1	∠			1
7B6	ONE	C12 x 20.7	5	6 7/16	115
a	1	∠			5
d	2	BAR			2
f	1	PL			5
		TOTAL WEIGHT			2387

ENGINEERING & CONSTRUCTION
JOHN BROWN
PROCESS PLANTS
JOHN BROWN E & C — CHARLESTON, WV

JOB NUMBER	CAD NAME
93729	—

No.	Revision	By	Date

Dept. STRUCTURAL STEEL
Equip. MOTOR ROOM/TRANSFORMER ROOM ROOF STEEL
Detail SHOP FABRICATION DETAILS

STEEL OF WEST VIRGINIA
HUNTINGTON, WV

Scale NONE	Equipment No.
Date 12-20-93	DWG. No.
Drawn By KJF	D-3468
Approved By RDC	