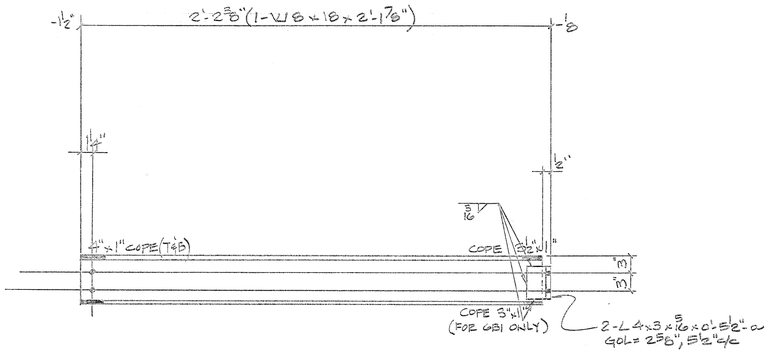

2 ~ BEAMS MK ~ GB1 (AS NOTED)
2 ~ do ~ GB2

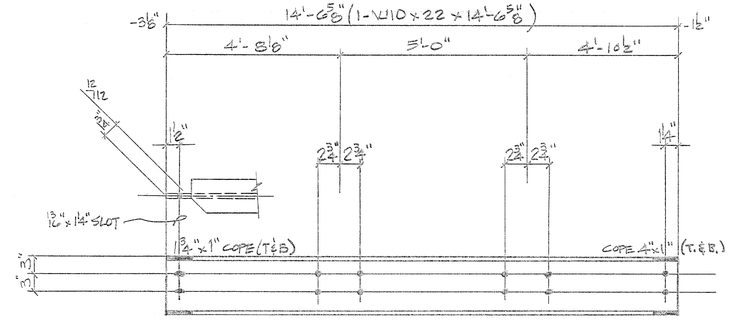

ONE ~ BEAM MK ~ GB5

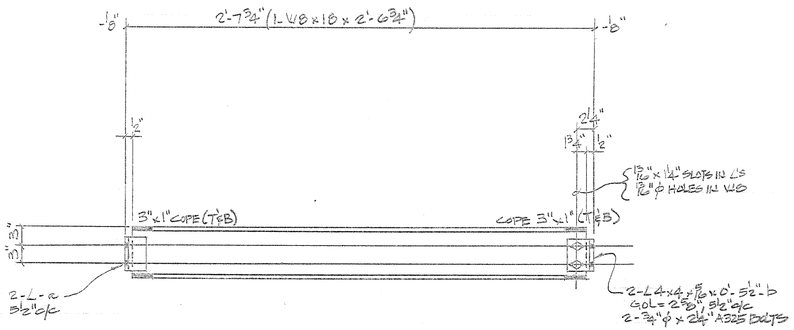

2 ~ BEAMS MK ~ GB3

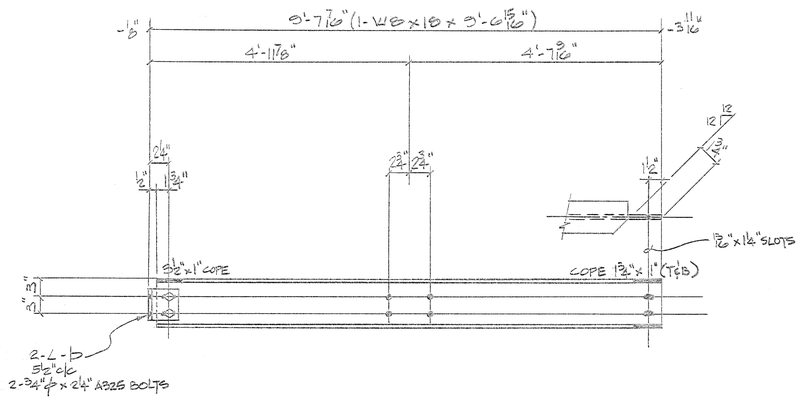

ONE ~ BEAM MK ~ GB6

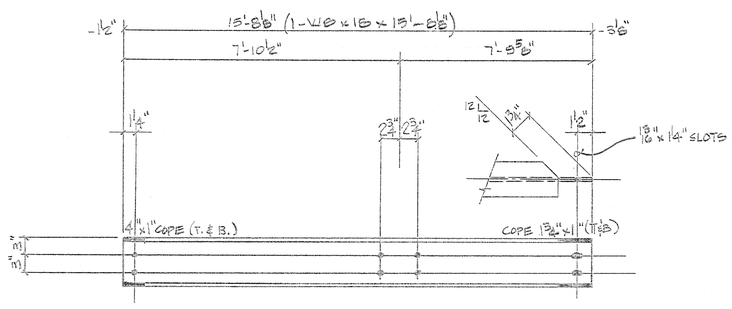

ONE ~ BEAM MK ~ GB4

BILL OF MATERIAL

MARK	QUAN.	DESCRIPTION	LENGTH FT.	LENGTH INCH	WEIGHT
GB1	2	W8 x 18	2	1 7/8	78
a	4	L 4 x 3 x 5/16	0	5 1/2	13
GB2	2	W8 x 18	2	1 7/8	78
a	4	L			13
GB3	2	W8 x 18	2	6 3/4	92
a	4	L			13
b	4	L 4 x 4 x 5/16	0	5 1/2	15
GB4	ONE	W8 x 18	15	8 1/8	252
GB5	ONE	W10 x 22	14	6 5/8	320
GB6	ONE	W8 x 18	9	6 15/16	172
b	2	L			8
		TOTAL WEIGHT			1084

FIELD BOLTS THIS SHEET
A325 BOLTS W/ HX. HD & HX. NUTS
12 - 3/4" ϕ x 1 3/4"
4 - 3/4" ϕ x 2"

SHOP BOLTS THIS SHEET
A325 BOLTS W/ HX. HD & HX. NUTS
6 - 3/4" ϕ x 2 1/4"
12 - 3/4" ϕ WASHERS

NOTES:
ALL HOLES TO BE 13/16" ϕ UNLESS NOTED
ALL WELDS TO BE E70XX
PAINT: SURFACE PREPARATION SP-6
ONE COAT (SHOP APPLIED) RED OXIDE PRIMER

ENGINEERING & CONSTRUCTION
JOHN BROWN
PROCESS PLANTS
JOHN BROWN E & C — CHARLESTON, WV

JOB NUMBER	CAD NAME
93723	—

No.	Revision	By	Date

Dept. STRUCTURAL STEEL
Equip. MOTOR ROOM/TRANSFORMER ROOM ROOF STEEL
Detail SHOP FABRICATION DETAILS

STEEL OF WEST VIRGINIA
HUNTINGTON, WV

Scale NONE	Equipment No.
Date 12-16-93	DWG. No. D-3467
Drawn By KJP	
Approved By RDC	