Assignment

Integrated Circuits

(KEC-501)

Que.1 A 741 opamp has an open loop voltage gain of 2×10^5 input resistance of $2M\Omega$ and output resistance of 50Ω

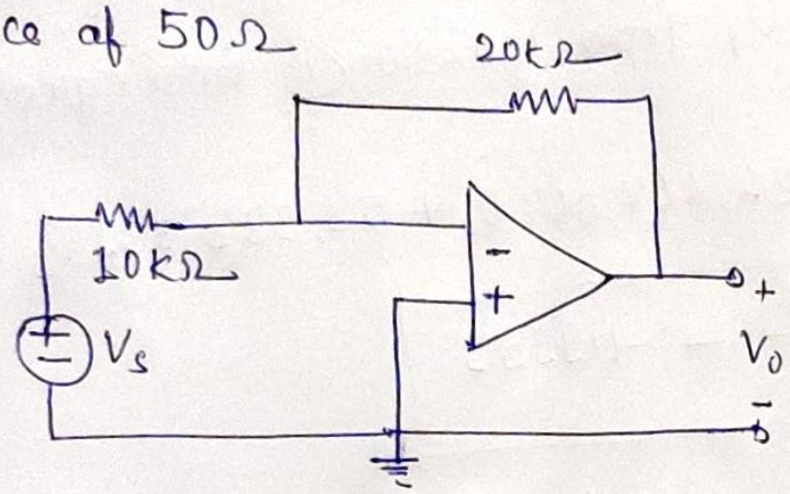

Calculate $V_o/V_s = ?$

Solution:

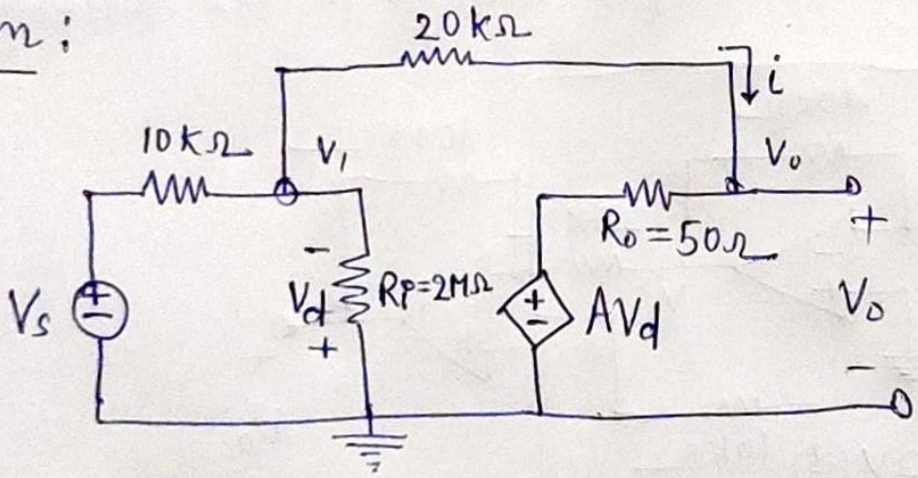

KCL at node 1

$$\frac{V_s - V_1}{10\times10^3} = \frac{V_1}{2000\times10^3} + \frac{V_1 - V_o}{20\times10^3}$$

$$200\,V_s = 301\,V_1 - 100\,V_o$$

or

$$2V_s \simeq 3V_1 - V_o \Rightarrow V_1 = \frac{2V_s + V_o}{3} \quad \text{—(1)}$$

KCL at node 0,

$$\frac{v_1 - v_0}{20 \times 10^3} = \frac{v_0 - Av_d}{50}$$

But $v_d = -v_1$ and $A = 200,000$ then

$$v_1 - v_0 = 400\,(v_0 + 200,000\,v_1) \quad \text{——— (2)}$$

Substituting v_1 from equation (1) into equation (2) gives

$$0 \simeq 26,667,067\,v_0 + 53,333,333\,v_s$$

$$\boxed{\frac{v_0}{v_s} = -1.9999}$$

Que.2. Determine the output voltage in the following figure

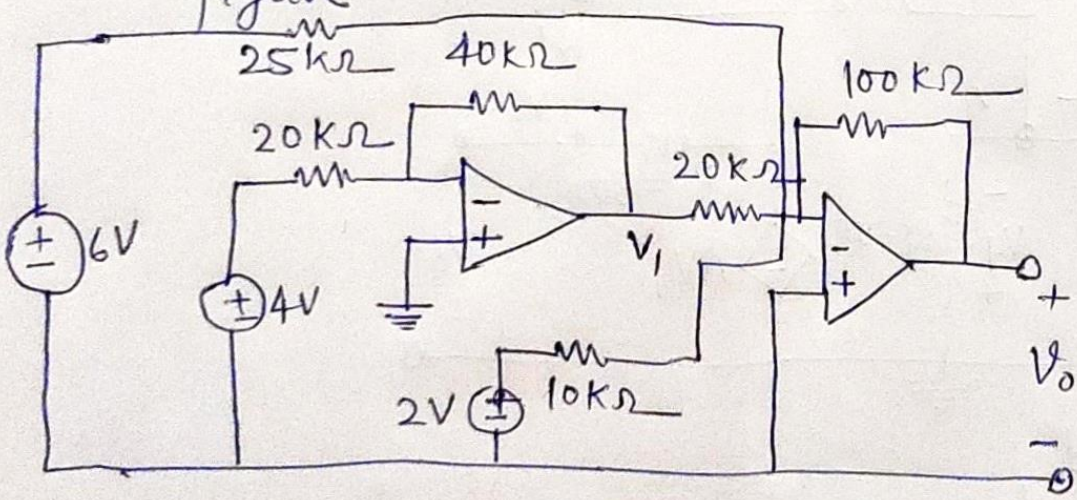

Solution:

~~Interned~~ Internal opamp is inverting amplifier

$$v_1 = -\frac{40}{20}(4V) = -8V$$

The second opamp is adder circuit →

$$v_0 = -\frac{100}{25}(6) - \frac{100}{20}(-8) - \frac{100}{10}(2) = -4V$$