Row 1: Shift Registers

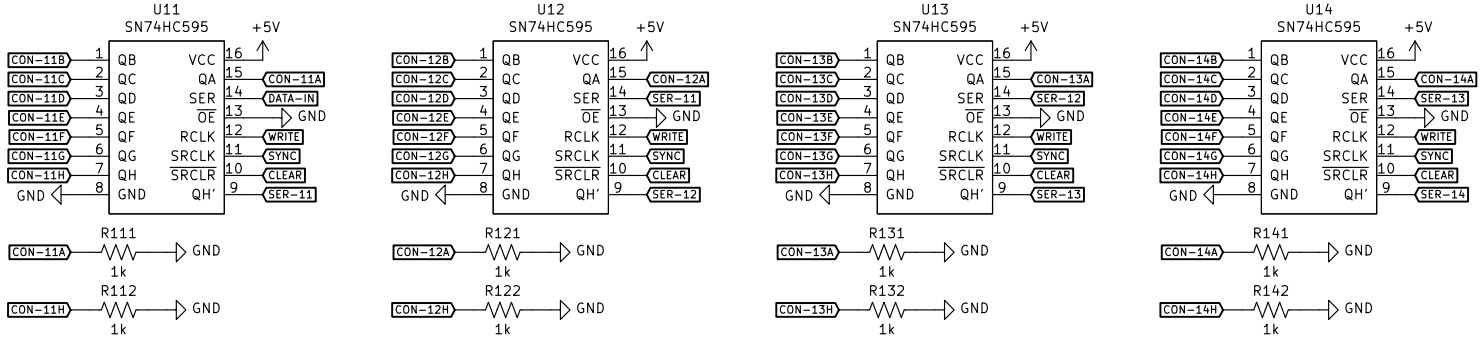

Row 2: The H-Bridges

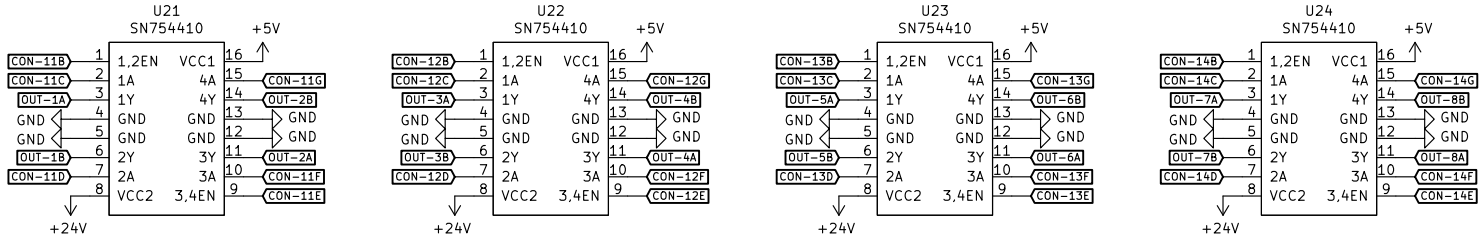

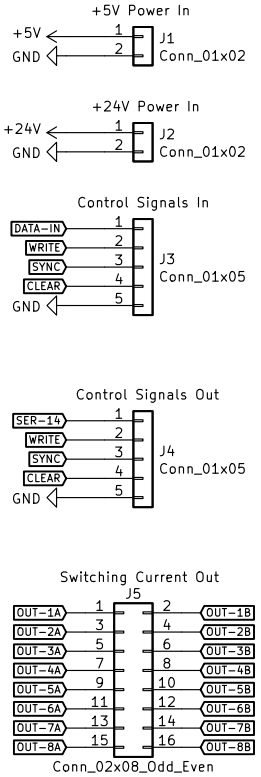

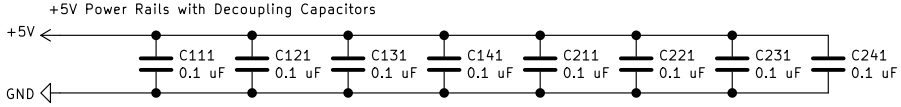

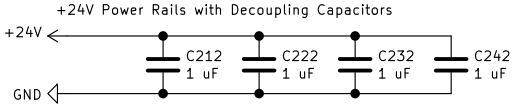

Power Definitions (for ERC)

PWR_FLAG → +24V
PWR_FLAG → +5V
PWR_FLAG → GND

Mounting Holes for the PCB

H1 MountingHole
H2 MountingHole
H3 MountingHole
H4 MountingHole

Dravin Flores
BPS 1200
MSU ATLAS sMDT
Michigan State University

Sheet: /
File: DCCH.sch

Title: Dark Current Control Hardware

Size: A4	Date: 2020-06-22	**Rev: 1**
KiCad E.D.A. eeschema (5.1.6)-1		Id: 1/1