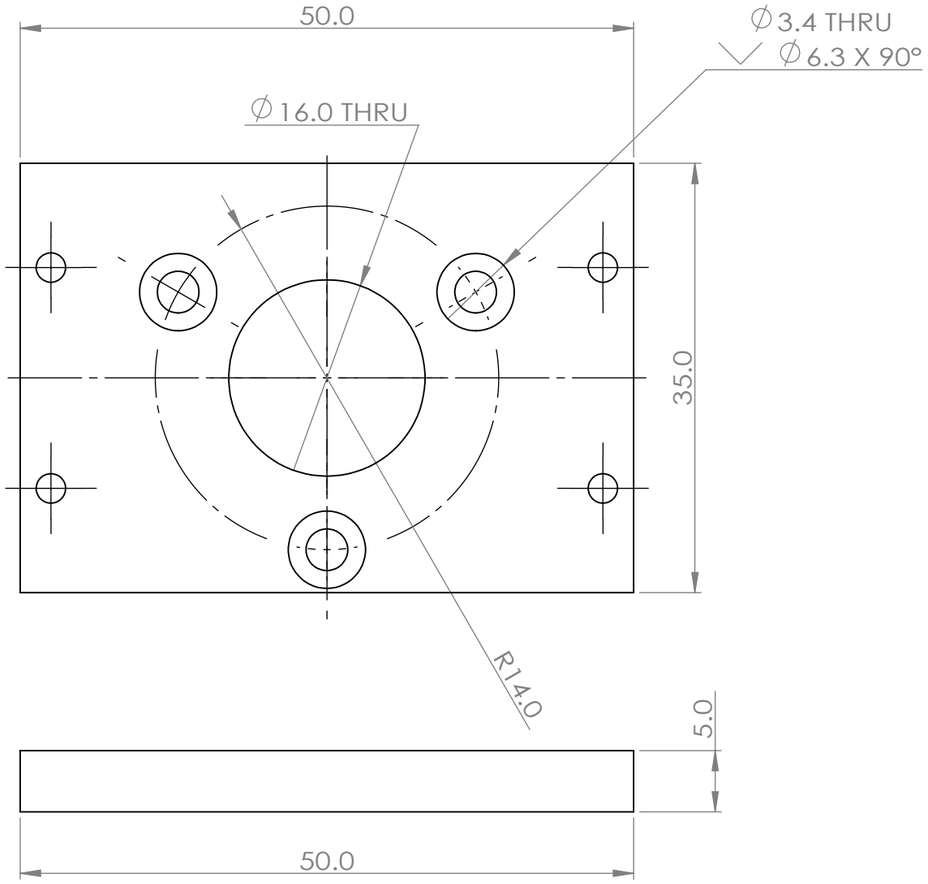

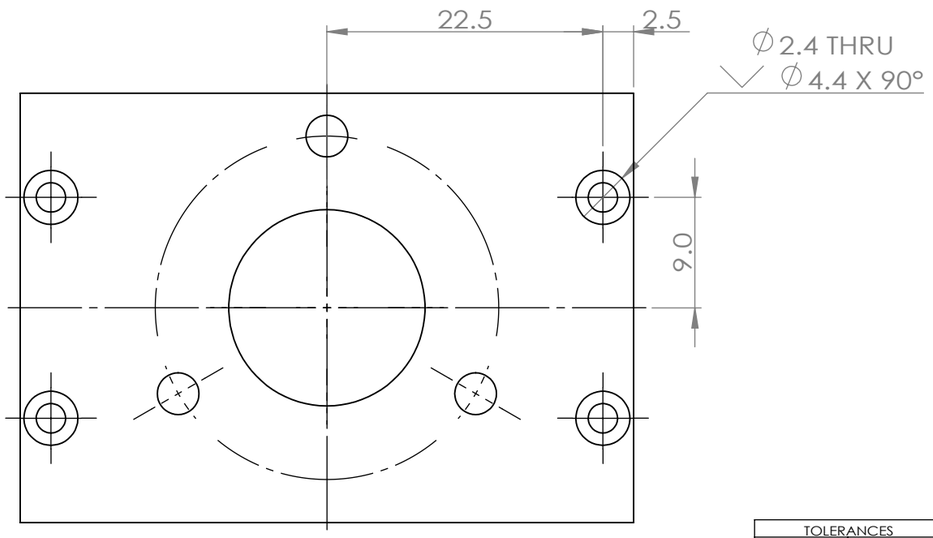

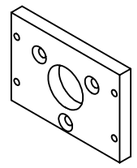

TOLERANCES		THIRD ANGLE PROJECTION
X = ± 0.5 X.X = ± 0.1 X.XX = ± 0.02	ANGULAR ±1° SURFACE FINISH MACHINED FACES Ra 6.3	

	NAME	DATE
DRAWN		
CHECKED		
APPROVED		

MATERIAL:

ALL DIMENSIONS ARE IN MILLIMETRES

DO NOT SCALE DRAWING

A3 SCALE 2:1

TITLE:
1st MOTOR SUPPORT TOP PLATE

DWG No.
PT-07

Imperial College London
Department of Mechanical Engineering

SHEET 1 OF 1 REVISION

SOLIDWORKS Educational Product. For Instructional Use Only.