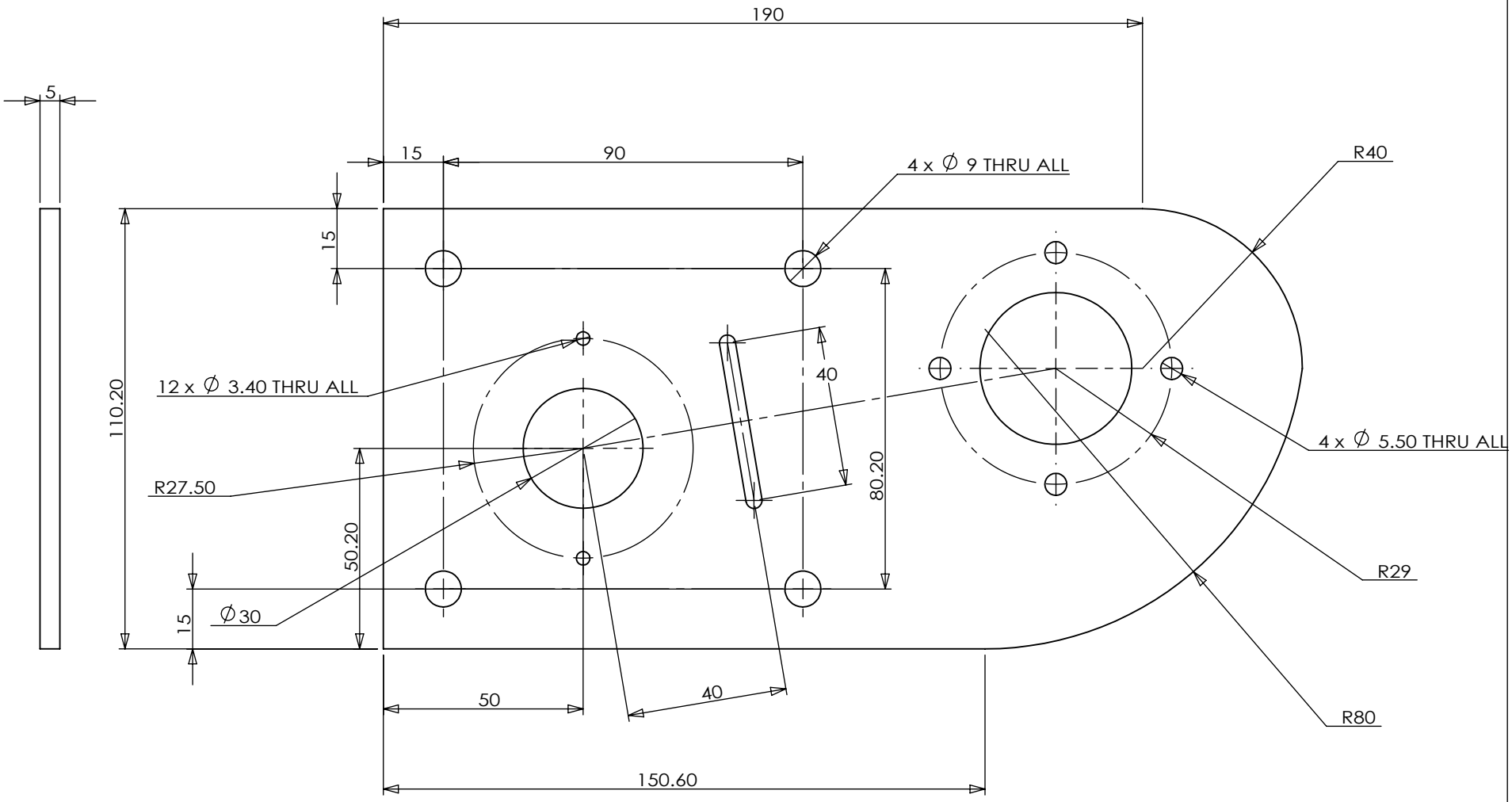

DEBUR ALL THE EDGES

IDEAL HOLE AND SLOT POSITIONS ACCORDING TO THE MID PLATE (PT-02)

TOLERANCES		THIRD ANGLE PROJECTION
X = ± 0.5 X.X = ± 0.1 X.XX = ± 0.02	ANGULAR ±1° SURFACE FINISH MACHINED FACES Ra 6.3	

	NAME	DATE
DRAWN	J. WANG	18/01/2020
CHECKED	K. THEOCHARIDES	21/01/2020
APPROVED	Y. WANG	21/01/2020

MATERIAL: ALUMINIUM

ALL DIMENSIONS ARE IN MILLIMETRES

DO NOT SCALE DRAWING

A4 | SCALE 2:3

TITLE: TOP PLATE

DWG No. PT-03

Imperial College London
Department of Mechanical Engineering

SHEET 1 OF 1 | REVISION 1

SOLIDWORKS Educational Product. For Instructional Use Only.