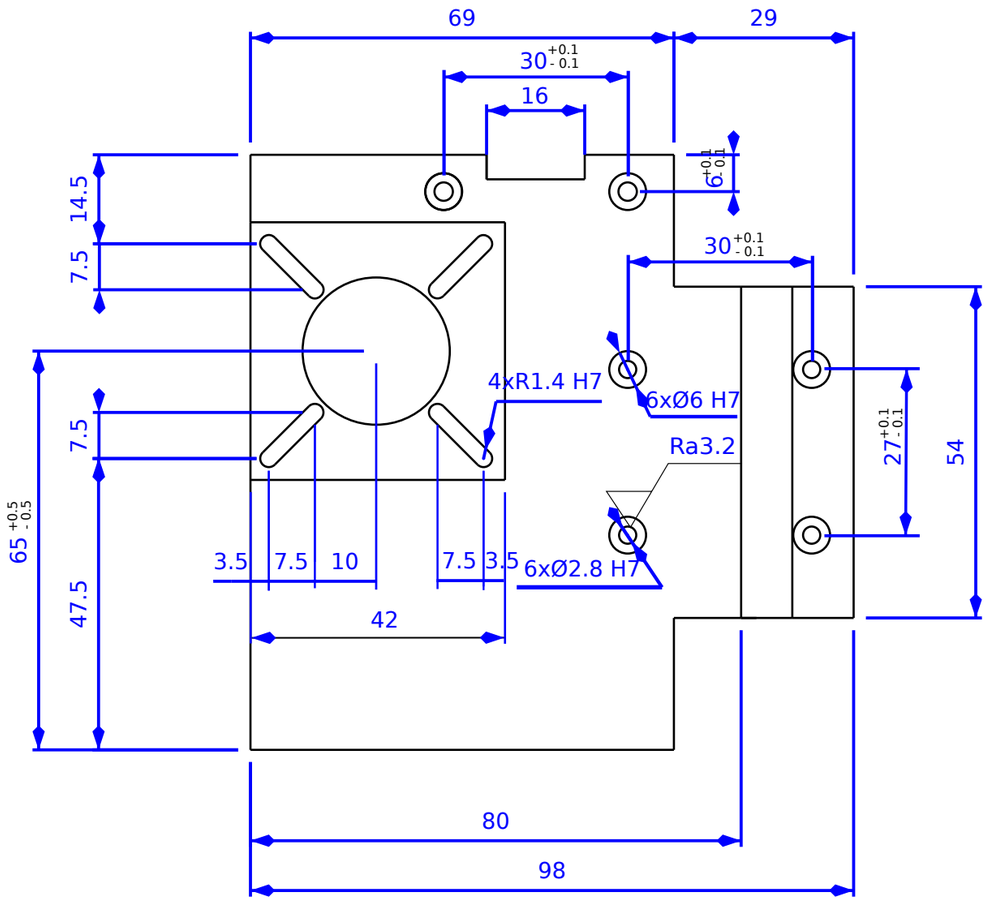

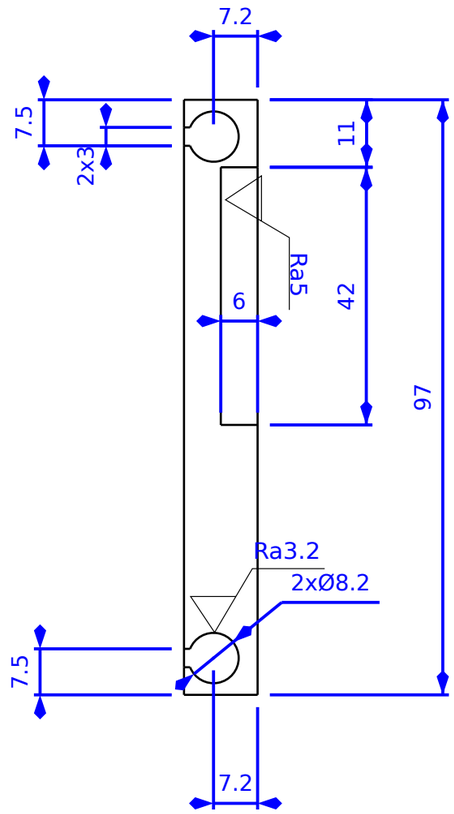

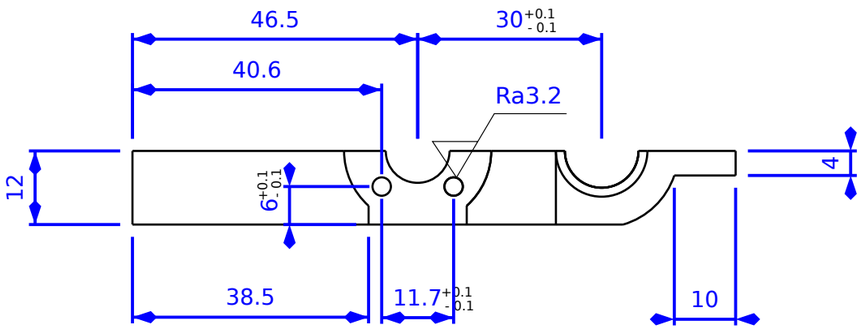

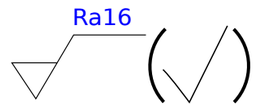

Created by: B. D. G.	Title: RIGHT SHOULDER		
Supplementary information: Houses the Nema 17 motor for the belt drive and the nut for the Z-Axis drive.	Size: A3	Sheet: 1 / 2	Scale: 1:1
	Part number: 01.09		
	Drawing number: 17.01.09A		
	Date: 01/05/2017		Revision: REV A