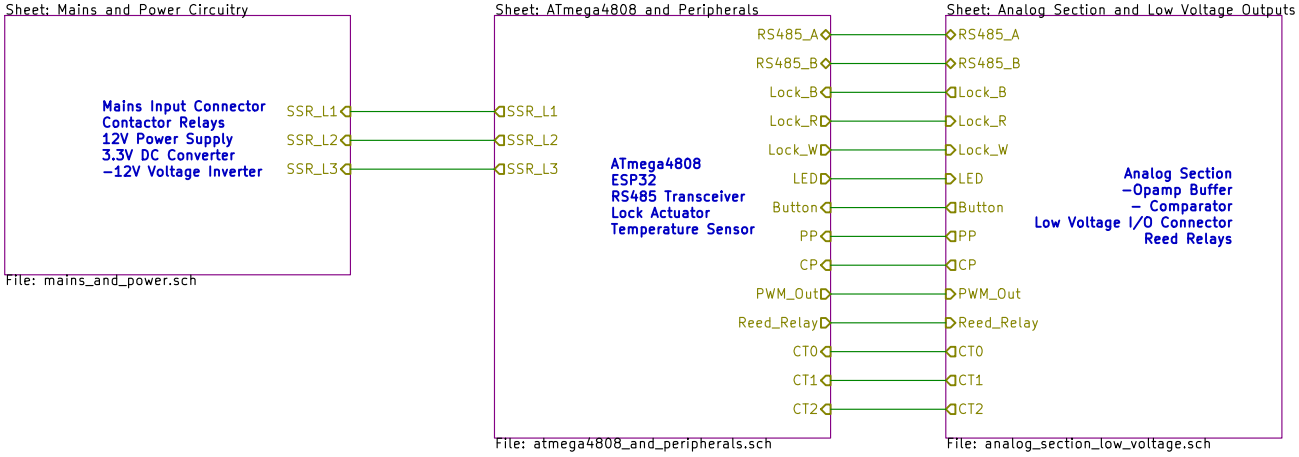

DONE: Switch CT inputs to J2
TODO: third ATmega UART
TODO: remove TempSensor, free Pin
TODO: finish button/LED connections

Sheet: /
File: atmevse.sch

Title: ATmega4808 EVSE

Size: A4	Date: 2020-05-14	**Rev: 0.6**
KiCad E.D.A. kicad (5.1.5)-3		Id: 1/4

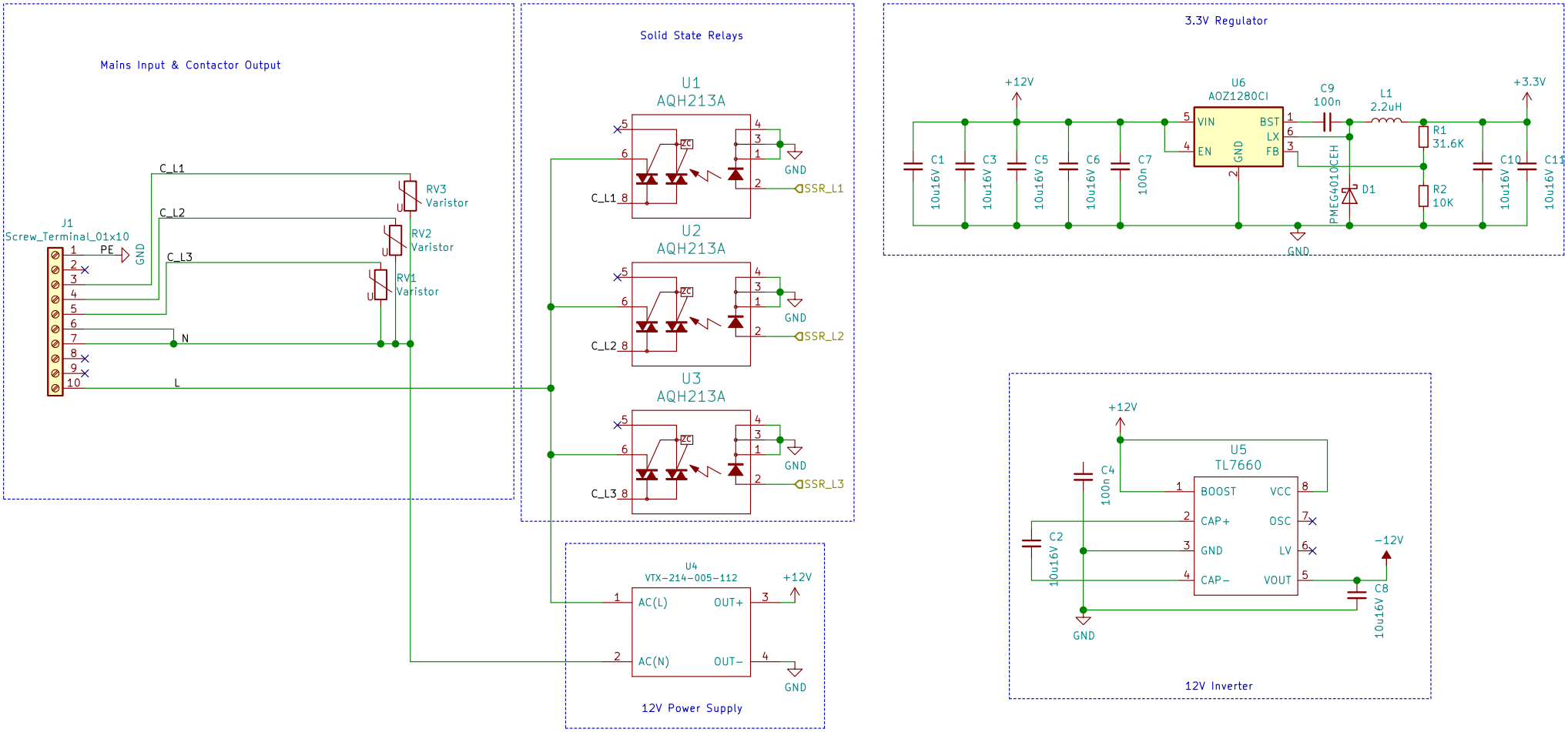

DONE: add bias voltage (VDD/2)
TODO: verify CT input circuit in sim (maybe rectify signal?)
DONE: Edit SSR connections
MOVED: CT input circuit

Sheet: /Mains and Power Circuitry/
File: mains_and_power.sch

Title:

Size: A4	Date: 2020-05-18	**Rev: 0.6**
KiCad E.D.A. kicad (5.1.5)-3		Id: 2/4

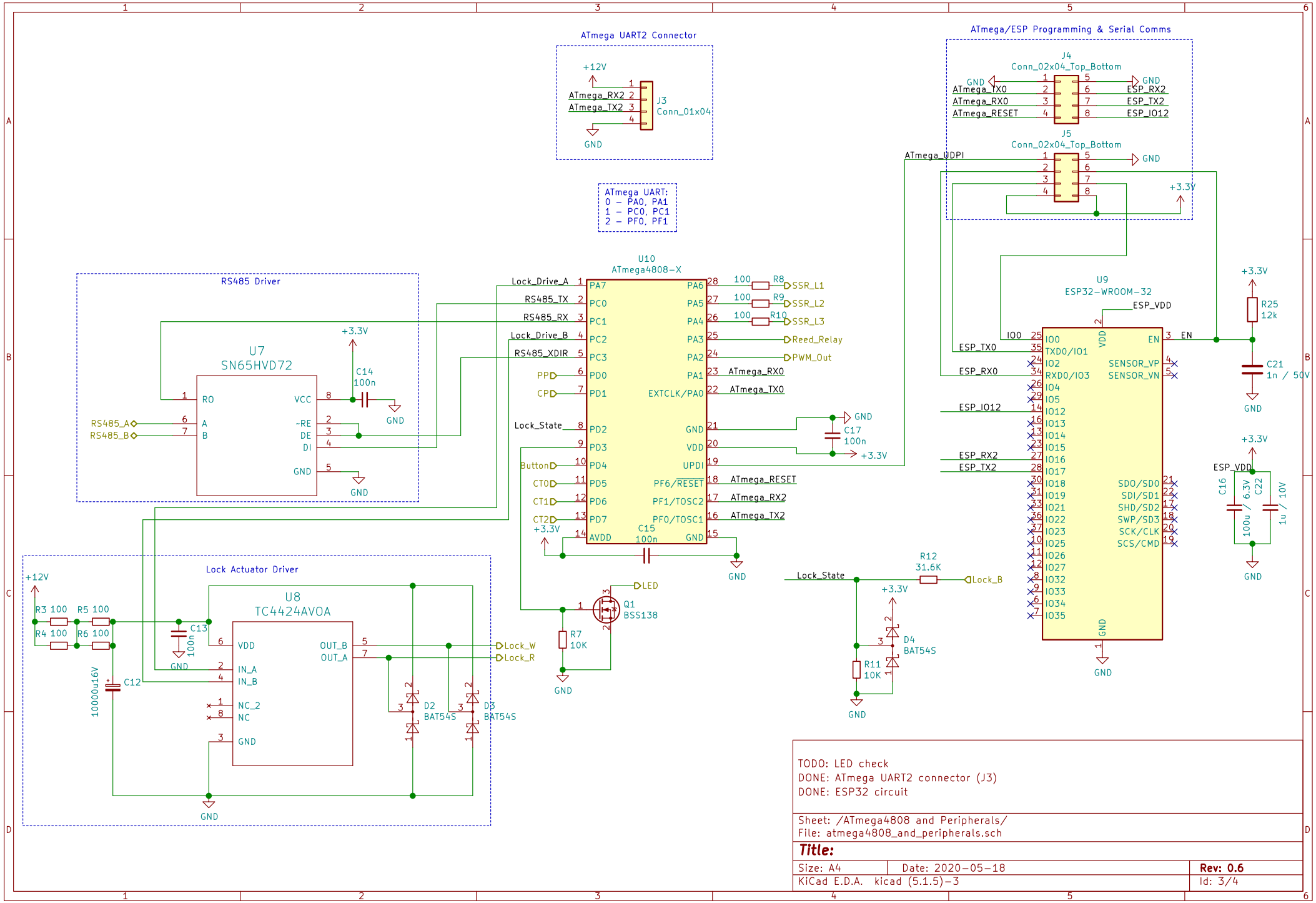

TODO: LED check
DONE: ATmega UART2 connector (J3)
DONE: ESP32 circuit

Sheet: /ATmega4808 and Peripherals/
File: atmega4808_and_peripherals.sch

Title:

Size: A4	Date: 2020-05-18	**Rev: 0.6**
KiCad E.D.A. kicad (5.1.5)-3		Id: 3/4

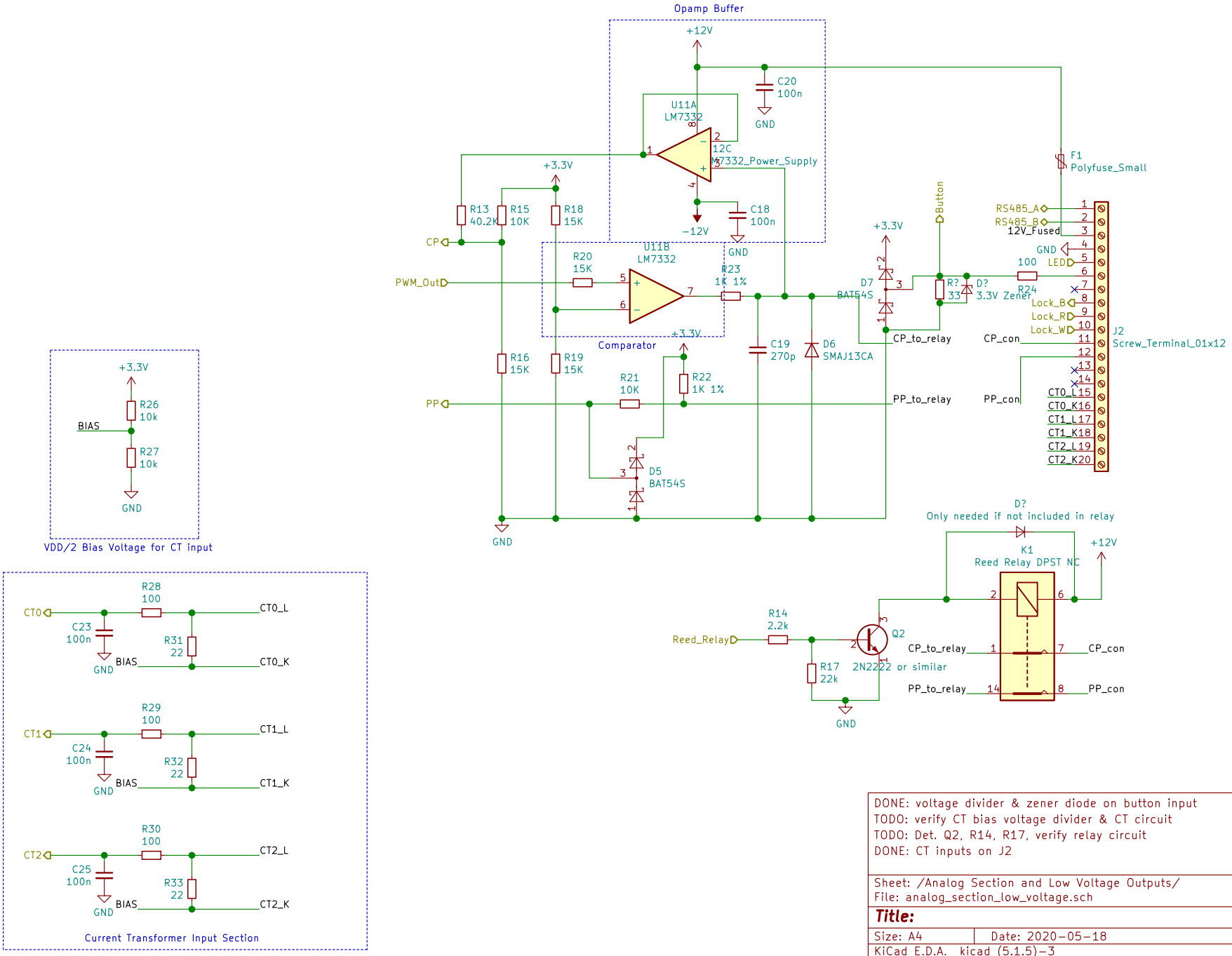

DONE: voltage divider & zener diode on button input
TODO: verify CT bias voltage divider & CT circuit
TODO: Det. Q2, R14, R17, verify relay circuit
DONE: CT inputs on J2

Sheet: /Analog Section and Low Voltage Outputs/
File: analog_section_low_voltage.sch

Title:

Size: A4	Date: 2020-05-18	**Rev: 0.6**
KiCad E.D.A. kicad (5.1.5)-3		Id: 4/4