Translated from Ukrainian to English - www.onlinedoctranslator.com

Addition
to Agreement 2024/13-02 dated February 13, 2024

TECHNICAL SPECIFICATION

Dnipro February 13, 2024

Prime Snack Limited Liability Companyhereinafter referred to as "Buyer", represented by the director Hryshyn Pylyp Valeriyovych, who acts on the basis of the Charter, on the one hand, and

Limited Liability Company "MONOPAK", hereinafter referred to as the "Supplier", represented by director Viktor Petrovych Shevchenko, acting on the basis of the Charter, on the other hand, collectively hereinafter referred to as the "Parties", and each individually as a "Party",

agreed on the technical specification for the Goods delivered under the terms of Contract No. 2024/13-02 dated February 13, 2024

Technical specification for multi-layer combined material (VORR + RET met +RE) for Doi-Pak PACKAGE with printing "DP 140*200 (40+40)"			
Customer	"Prime Snack" LLC		
Type of packaging	Doi-pak		
Product type	Do-pack "Crispy cheese balls"		
TECHNICAL CHARACTERISTICS			
Layer	**Material**	**Thickness, µm**	**Tolerance,%**
Outer layer (1)	VORR film	20	±5%
Print (2)	Paint	2	±5%
Adhesive (3)	Glue	2	±5%
Middle layer (4)	PET film met	12	±5%
Adhesive (5)	Glue	2	±5%
Inner layer (6)	PE film	80	±5%
Total thickness, µm		118	±7%
Content of residual solvents, mg/m²		no more	10.0
PRINTING			
Printing	Present		
Print side	VORR		
Print type	Reverse		
Color	ΔE ≤5.0 units (in the Lab measurement system)		
Combination of paint layers	±0.3 mm (for raster images) ±0.3 mm (for line images)		

Doy-pack 140x200 (40+40)

Parameters	MM	admission
G - Width of the package	140	±2
h- Package height	200	±2
O- Height of the bottom	40	±2
C- Cutting of easy opening	30	±1
d - side seam	7.5	±1
R is the radius of the bottom hole	6	±0.5
S - hole location	-	-
e- placement of the euro-suspension	5	±1
f- bottom seam	7.5	±2
K- Zip placement	No	
Availability of euro suspension	Yes	
Allowance for displacement of the bottom hole to the right/left	2	

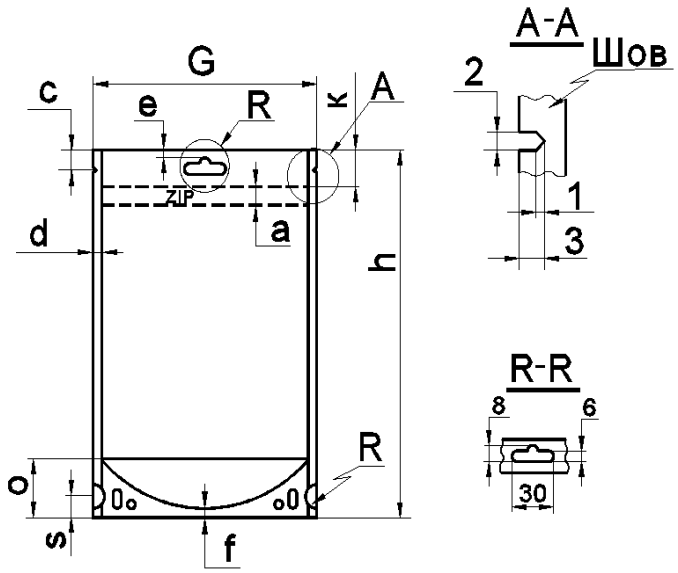

PACKAGING

Number of packages in a box, pieces	**1,000**
Pallet/pallet size, mm	**1200*800**

The number of bags in the volume of 1,000 pieces must be packed in a cardboard box with a polyethylene insert and glued with adhesive tape to ensure the protection of the bags from dust, dirt, and sudden ingress of solid particles during transportation or storage. Cardboard boxes are placed horizontally on the pallet. The use of wooden pallets is allowed, provided that corrugated cardboard is placed under the boxes. Arrangement of boxes in several tiers is allowed. A cardboard partition should be used between tiers, the upper tier is covered with cardboard and chipboard. The formed pallet is wrapped with stretch film on top of the screed.

MARKING

Information on marking tags/ information	Each box is marked with a tag with the following information: Manufacturer, recipient-customer, order code (order number), product name, material structure, box number, number of packages in the box, net weight, gross weight, production date, operator number, picker number, storage period.
	The pallet is accompanied by a notice that is affixed in a readable place with the following information: Manufacturer, recipient-customer, order code (order no.), product name, material structure, number of boxes on the pallet, number of packages in a box, net weight, gross weight, production date, shelf life.

CONDITIONS OF STORAGE

Storage conditions	Store in factory packaging; avoid direct sunlight and heat sources (at least 1 m from heating devices).		
Indicator	**Optimal**	**min**	**max**
Temperature, ° C		5	35
Humidity, %		40	80
Before use	Before use, the packaging material must be acclimatized at the temperature of the working process for 24 hours.		

Guaranteed storage period	12 months from the date of manufacture
TRANSPORTATION OF PRODUCTS	
Transportation of products in a packaged form is allowed by all modes of transport, in covered vehicles in accordance with the rules of transportation of goods applicable to this mode of transport	

This Technical Specification is an integral part of Contract No. 2024/13-02 dated February 13, 2024, executed in 2 copies of equal legal force, one copy for each party.

PROVIDER:
LIMITED COMPANY
RESPONSIBILITY OF "MONOPAK"

Director

_____ **V.P. Shevchenko**

BUYER:
LIMITED COMPANY
RESPONSIBILITY OF "PRIME SNACK"

Director

_____ **P.V. Grishin**

УКРАЇНА
ТОВАРИСТВО З ОБМЕЖЕНОЮ ВІДПОВІДАЛЬНІСТЮ
"ПРАЙМ СНЕК"
№40271201
МІСТО Мукачево