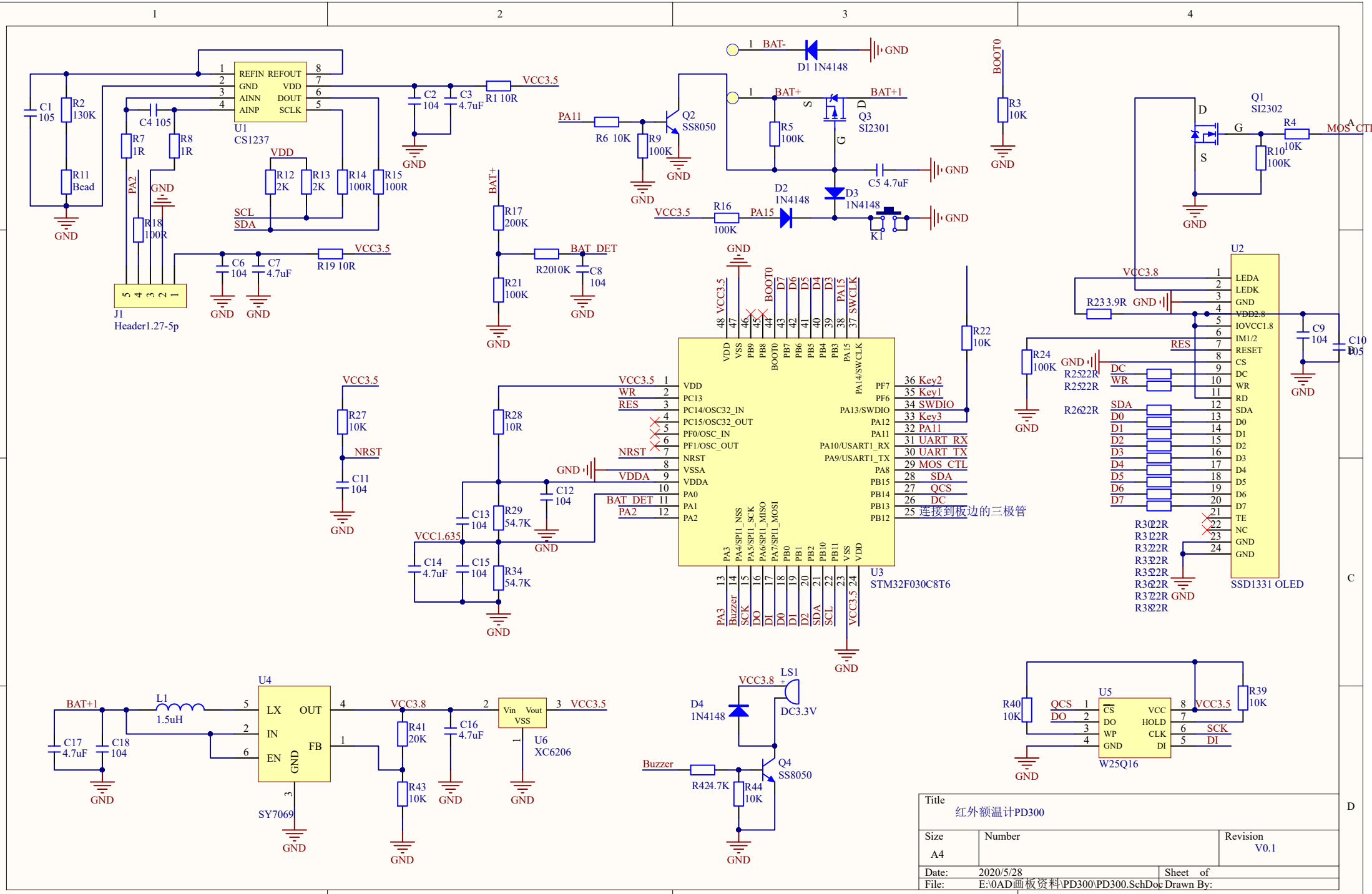
U1
CS1237
REFIN REFOUT
GND VDD
AINN DOUT
AINP SCLK
C1 105
R2 130K
R11 Bead
C4 105
R7 1R
R8 1R
R12 2K
R13 2K
R14 100R
R15 100R
R18 100R
C2 104
C3 4.7uF
R1 10R
VCC3.5
VDD
SCL
SDA
PA2
GND
J1
Header1.27-5p
C6 104
C7 4.7uF
R19 10R
BAT+
R17 200K
R21 100K
R20 10K
BAT_DET
C8 104
PA11
R6 10K
R9 100K
Q2
SS8050
BAT-
D1 1N4148
BAT+
BAT+1
R5 100K
Q3
SI2301
C5 4.7uF
D2
1N4148
D3
1N4148
R16
100K
PA15
K1
BOOT0
R3 10K
Q1
SI2302
R4 10K
R10 100K
MOS_CTL
R27 10K
NRST
C11 104
R28 10R
C12 104
C13 104
R29 54.7K
VCC1.635
C14 4.7uF
C15 104
R34 54.7K
VDDA
BAT_DET
PA2
WR
RES
U3
STM32F030C8T6
PF7 Key2
PF6 Key1
PA13/SWDIO SWDIO
PA12 Key3
PA11 PA11
PA10/USART1_RX UART_RX
PA9/USART1_TX UART_TX
PA8 MOS_CTL
PB15 SDA
PB14 QCS
PB13 DC
PB12 连接到板边的三极管
R22 10K
U2
SSD1331 OLED
VCC3.8
R23 3.9R
R24 100K
R25 22R
R26 22R
R30 22R
R31 22R
R32 22R
R33 22R
R35 22R
R36 22R
R37 22R
R38 22R
C9 104
C10 105
U4
SY7069
BAT+1
L1
1.5uH
C17 4.7uF
C18 104
LX OUT
IN FB
EN GND
R41 20K
R43 10K
C16 4.7uF
U6
XC6206
Vin Vout
VSS
LS1
DC3.3V
D4
1N4148
Buzzer
R42 4.7K
R44 10K
Q4
SS8050
U5
W25Q16
R40 10K
R39 10K
QCS
DO
CS VCC
DO HOLD
WP CLK
GND DI
SCK
DI
Title
红外额温计PD300
Size
A4
Number
Revision
V0.1
Date: 2020/5/28
Sheet of
File: E:\0AD画板资料\PD300\PD300.SchDoc
Drawn By: