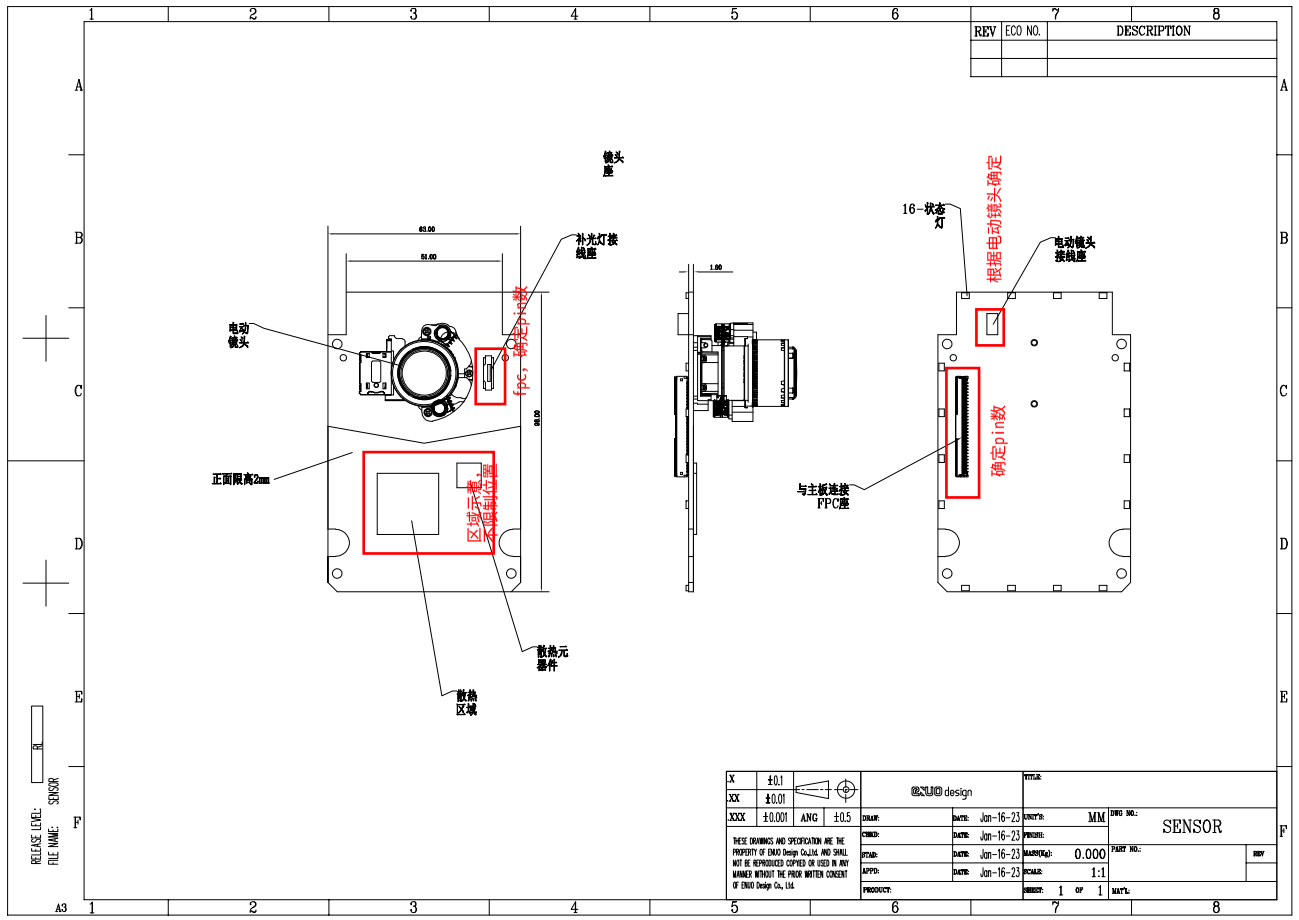
镜头座
补光灯接线座
电动镜头
fpc，确定pin数
正面限高2mm
区域示意，不限制位置
散热元器件
散热区域
16-状态灯
根据电动镜头确定
电动镜头接线座
与主板连接FPC座
确定pin数
SENSOR
DESCRIPTION
DRAWN: Jan-16-23
CHECKED: Jan-16-23
ITEM: Jan-16-23
APPD: Jan-16-23
UNIT: MM
SCALE: 1:1
SHEET 1 OF 1
DWG NO.
PART NO.
THESE DRAWINGS AND SPECIFICATION ARE THE PROPERTY OF ENUO Design Co.,Ltd. AND SHALL NOT BE REPRODUCED COPIED OR USED IN ANY MANNER WITHOUT THE PRIOR WRITTEN CONSENT OF ENUO Design Co., Ltd.
RELEASE LEVEL:
FILE NAME:

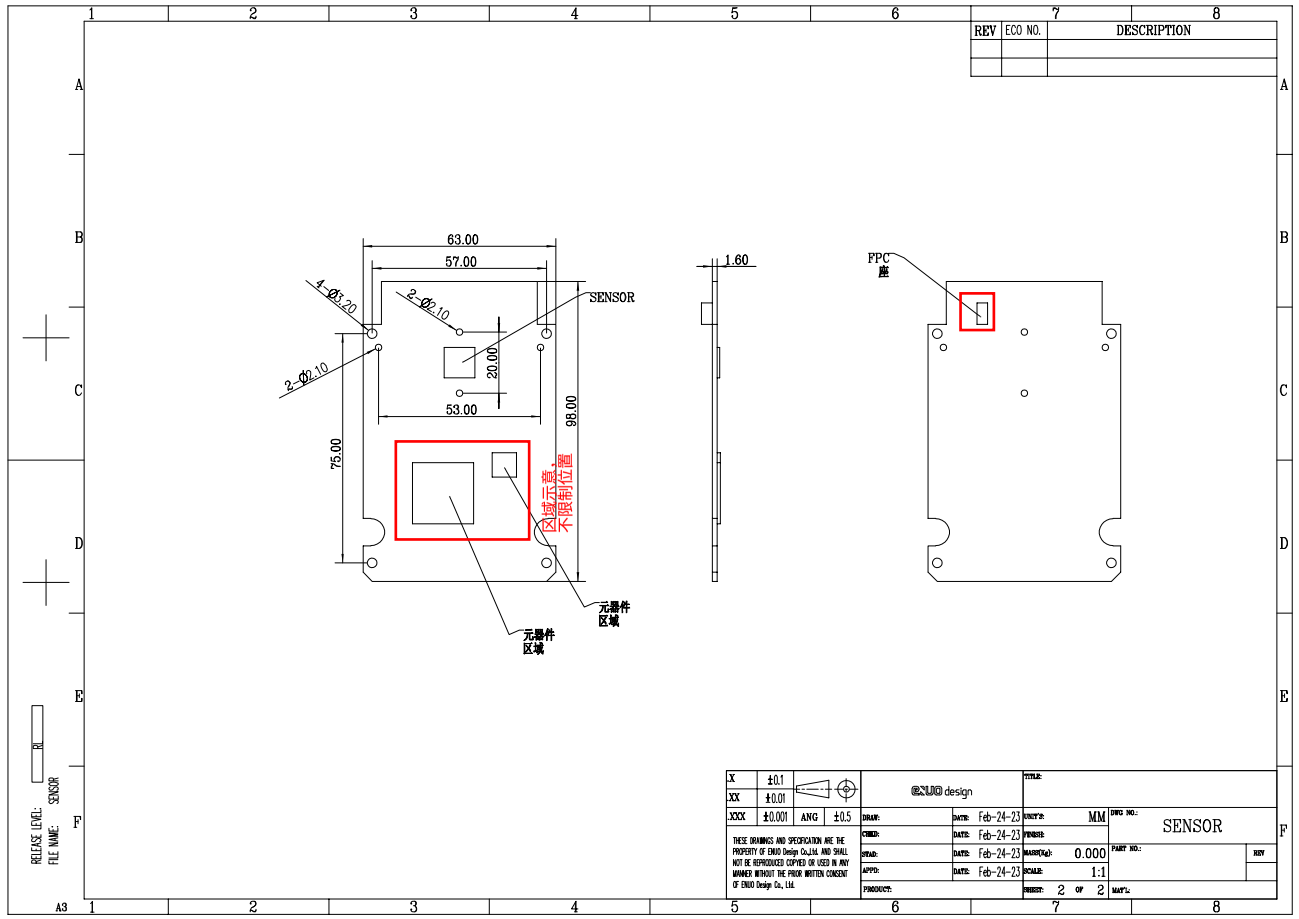
63.00
57.00
4-Ø1.20
2-Ø2.10
2-Ø2.10
SENSOR
20.00
53.00
75.00
98.00
区域示意，不限制位置
元器件区域
元器件区域
1.60
FPC座
SENSOR
DESCRIPTION
DRAWN: Feb-24-23
CHECKED: Feb-24-23
ITEM: Feb-24-23
APPD: Feb-24-23
UNIT: MM
SCALE: 1:1
SHEET 2 OF 2
DWG NO.
PART NO.
THESE DRAWINGS AND SPECIFICATION ARE THE PROPERTY OF ENUO Design Co.,Ltd. AND SHALL NOT BE REPRODUCED COPIED OR USED IN ANY MANNER WITHOUT THE PRIOR WRITTEN CONSENT OF ENUO Design Co., Ltd.
RELEASE LEVEL:
FILE NAME:

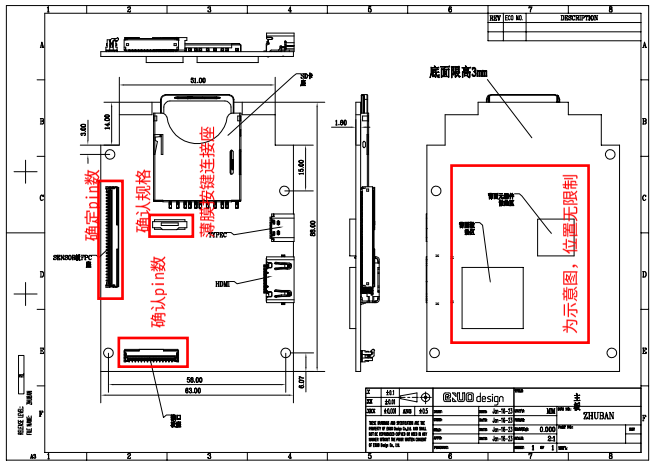
底面限高3mm
确定pin数
确认规格
限定按键连接座
确认pin数
为示意图，位置无限制
ZHUBAN

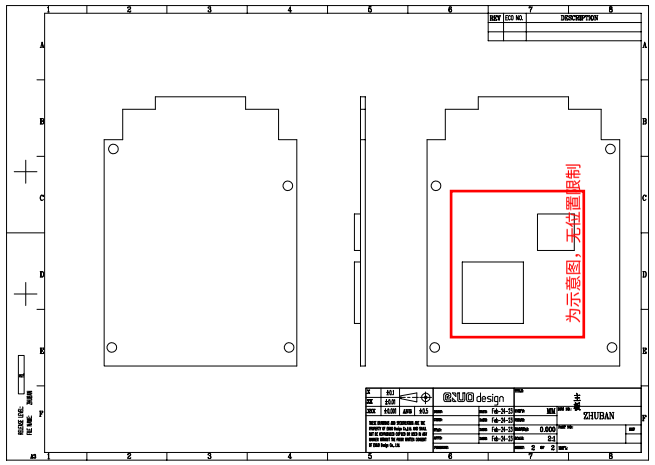
为示意图，无位置限制
ZHUBAN

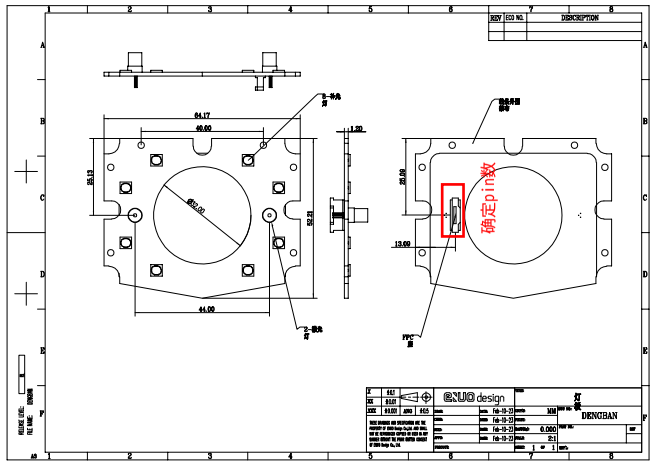
确定pin数
DENGBAN

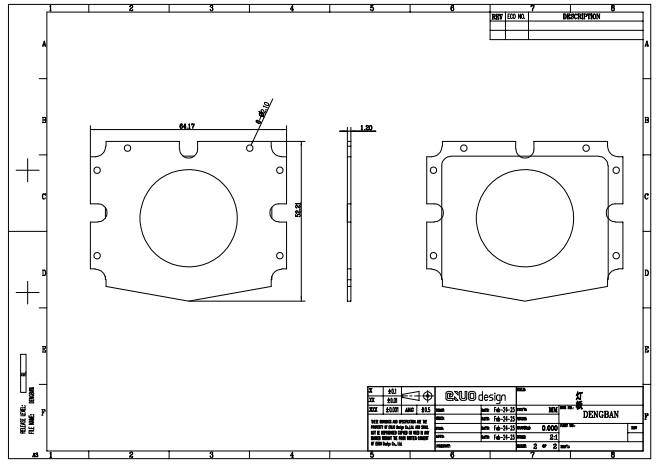
DENGBAN