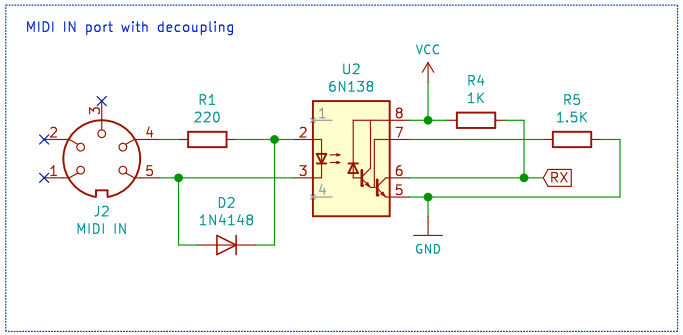

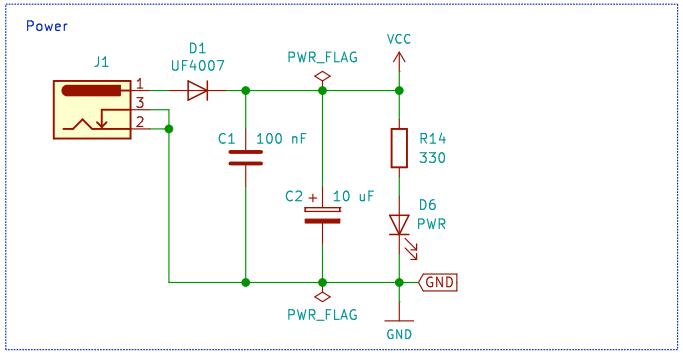

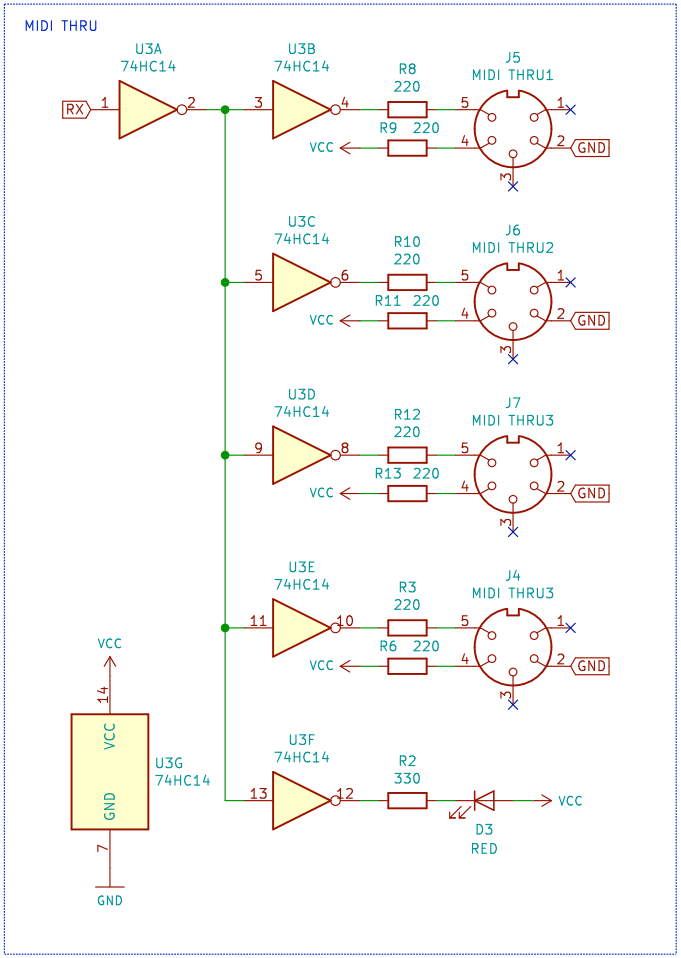

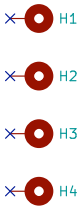

alex@musayev.com

Sheet: /
File: midi-thru.sch

Title: MIDI THRU

Size: A4	Date:	Rev: R2
KiCad E.D.A. kicad (5.0.1-3-g963ef8bb5)		Id: 1/1