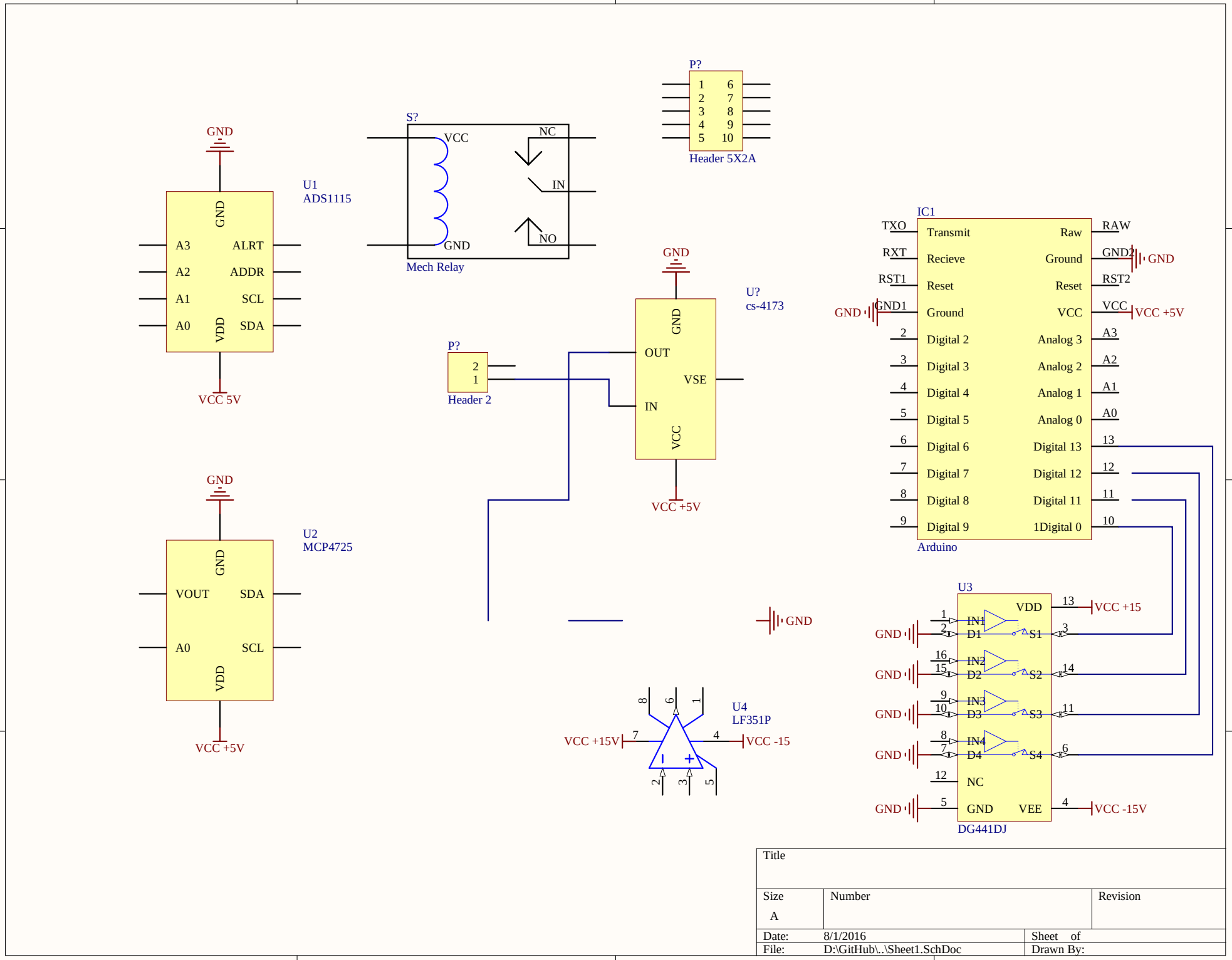
GND
U1
ADS1115
GND
A3
ALRT
A2
ADDR
A1
SCL
A0
SDA
VDD
VCC 5V
S?
VCC
NC
IN
NO
GND
Mech Relay
P?
1 6
2 7
3 8
4 9
5 10
Header 5X2A
GND
U?
cs-4173
GND
OUT
VSE
IN
VCC
VCC +5V
P?
2
1
Header 2
IC1
TXO
Transmit
Raw
RAW
RXT
Recieve
Ground
GND2
GND
RST1
Reset
Reset
RST2
GND
GND1
Ground
VCC
VCC
VCC +5V
2
Digital 2
Analog 3
A3
3
Digital 3
Analog 2
A2
4
Digital 4
Analog 1
A1
5
Digital 5
Analog 0
A0
6
Digital 6
Digital 13
13
7
Digital 7
Digital 12
12
8
Digital 8
Digital 11
11
9
Digital 9
1Digital 0
10
Arduino
GND
U2
MCP4725
VOUT
SDA
A0
SCL
VDD
VCC +5V
GND
U3
VDD
13
VCC +15
GND
1
2
IN1
D1
S1
3
GND
16
15
IN2
D2
S2
14
GND
9
10
IN3
D3
S3
11
GND
8
7
IN4
D4
S4
6
12
NC
GND
5
GND
VEE
4
VCC -15V
DG441DJ
GND
8
6
1
U4
LF351P
VCC +15V
7
4
VCC -15
2
3
5
Title
Size
A
Number
Revision
Date:
8/1/2016
Sheet of
File:
D:\GitHub\..\Sheet1.SchDoc
Drawn By:

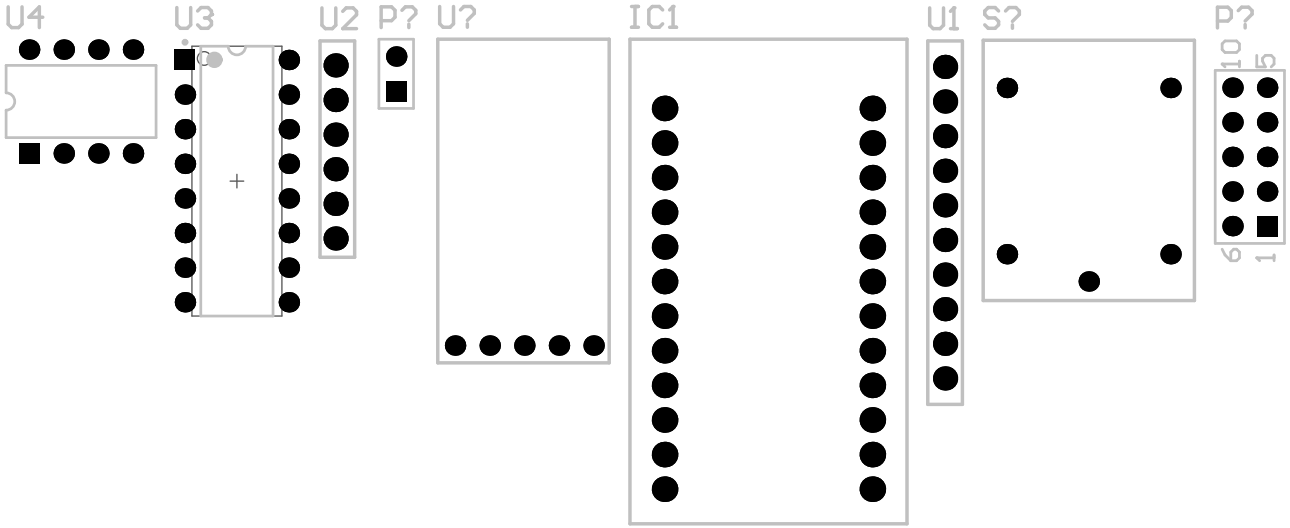
U4
U3
U2
P?
U?
IC1
U1
S?
P?
10
5
6
1