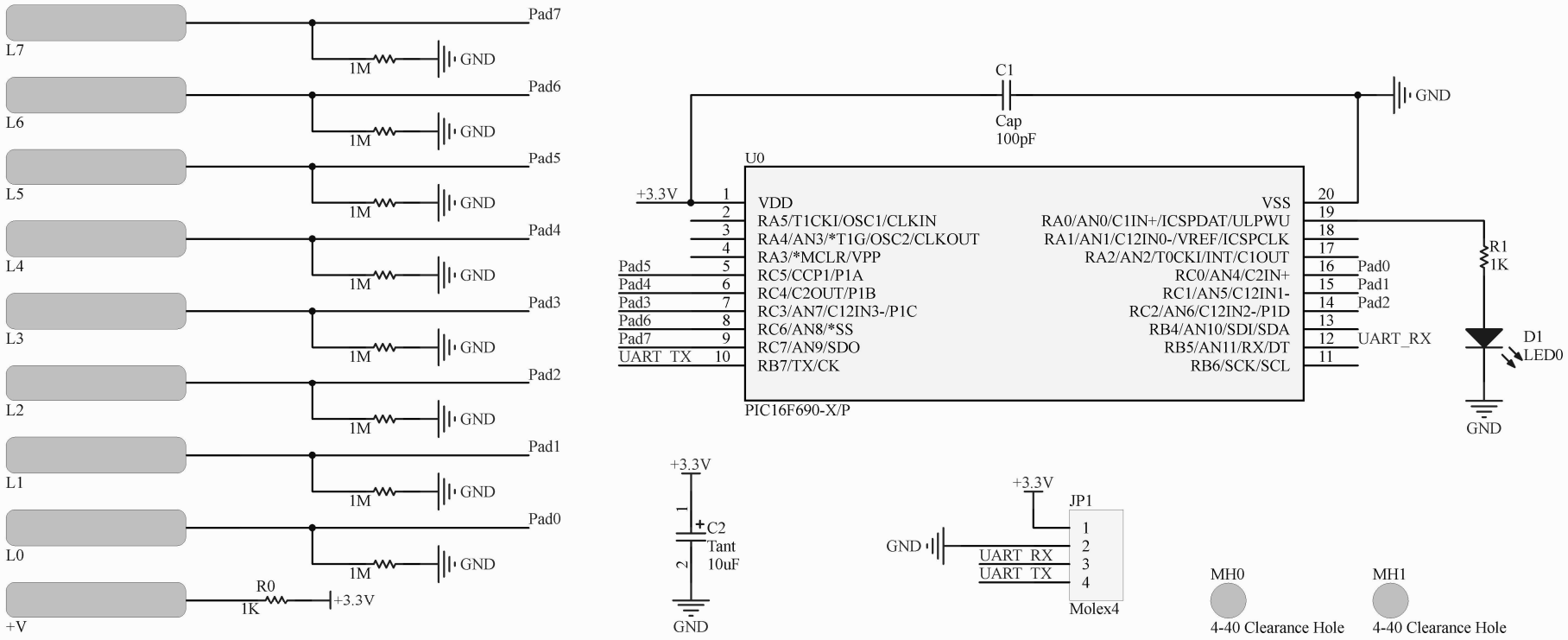

Title		
Size A	Number	Revision
Date: 5/22/2018		Sheet of
File: U:\afbell\..\PIC16F690Sensor.SchDoc		Drawn By: