Nixie Clock *REDUX* - Core Board

02. Power Input — Power Input — File: power_input.kicad_sch

03. Power Input Telemetry — Power Input Telemetry — File: power_input_telemetry.kicad_sch

04. +3.3V Power Supply — +3.3V Power Supply — File: pos3p3_power_supply.kicad_sch

05. +3.3V Telemetry — +3.3V Telemetry — File: pos3p3_telemetry.kicad_sch

06. +180V Power Supply — +180V Power Supply — File: pos180_power_supply.kicad_sch

07. +180V Telemetry — +180V Telemetry — File: pos180_telemetry.kicad_sch

08. PIC32MZ Programming — PIC32MZ Programming — File: pis32mz_programming.kicad_sch

09. PIC32MZ Bypass — PIC32MZ Bypass — File: PIC32MZ_Bypass.kicad_sch

10. PIC32MZ — PIC32MZ — File: PIC32MZ.kicad_sch

11. PIC32MZ Clocking — PIC32MZ Clocking — File: PIC32MZ_Clocking.kicad_sch

12. Backup RTC — Backup RTC — File: Backup_RTC.kicad_sch

13. USB UART Bridge — USB UART Bridge — File: USB_UART_Bridge.kicad_sch

14. Platform ETC — Platform ETC — File: Platform_ETC.kicad_sch

15. PGOOD LEDs — PGOOD LEDs — File: PGOOD_LEDs.kicad_sch

16. Status LEDs — Status LEDs — File: Status_LEDs.kicad_sch

17. IO Buffers 1 — IO Buffers 1 — File: IO_Buffers_1.kicad_sch

18. IO Buffers 2 — IO Buffers 2 — File: IO_Buffers_2.kicad_sch

19. IO Connector — IO Connectors — File: IO Connectors.kicad_sch

20. Misc Circuits — Misc Circuits — File: Misc_Circuits.kicad_sch

21. Mechanical — Mechanical — File: Mechanical.kicad_sch

Drew Maatman

Sheet: /
File: Nixie_Clock_Core.kicad_sch

Title:

Size: A	Date: 2023-05-12	**Rev: PRELIM**
KiCad E.D.A. kicad 7.0.1		Id: 1/21

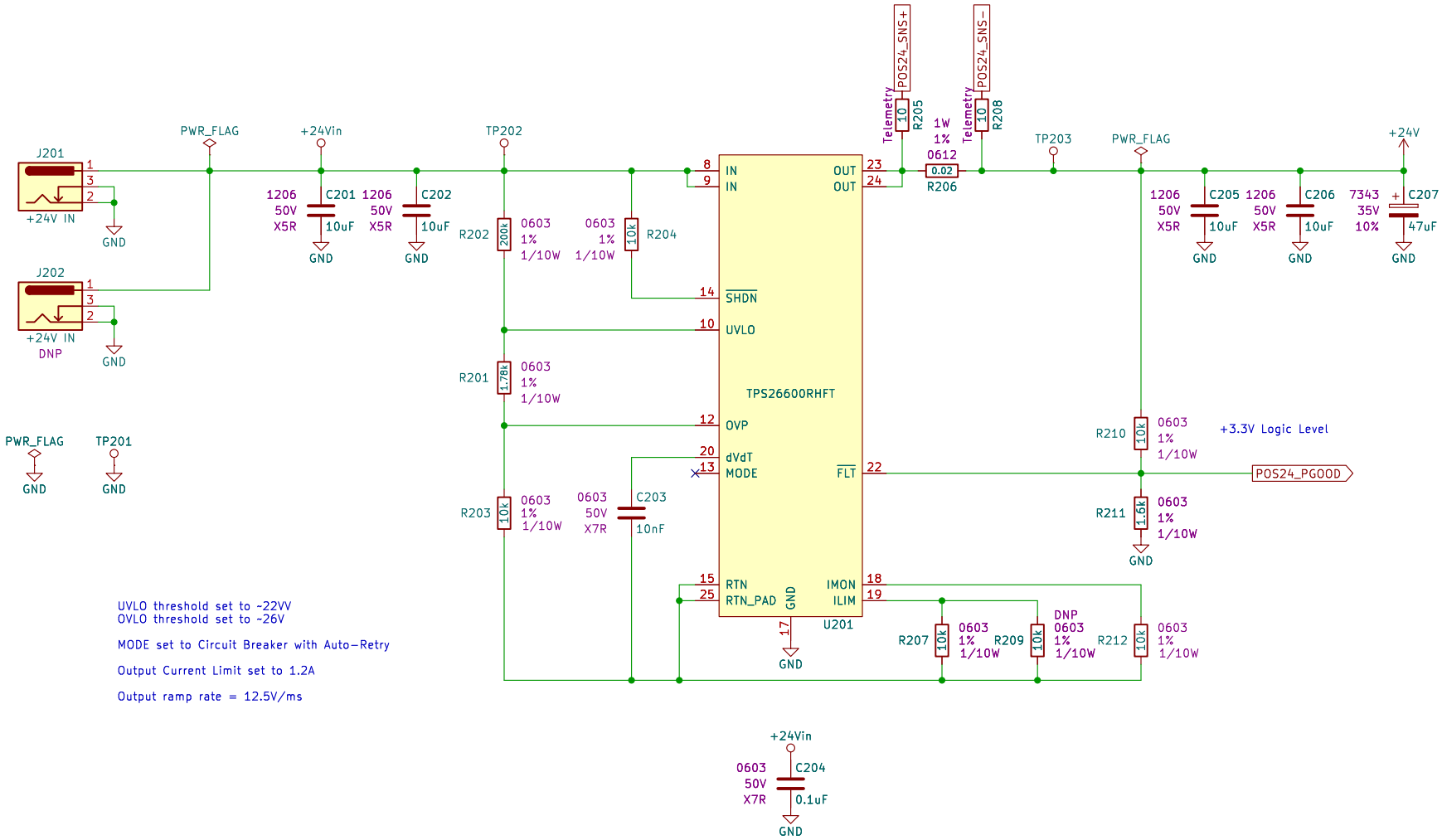

Drew Maatman

Sheet: /Power Input/

File: power_input.kicad_sch

Title:

Size: A	Date: 2023−05−12	**Rev: PRELIM**
KiCad E.D.A. kicad 7.0.1		Id: 2/21

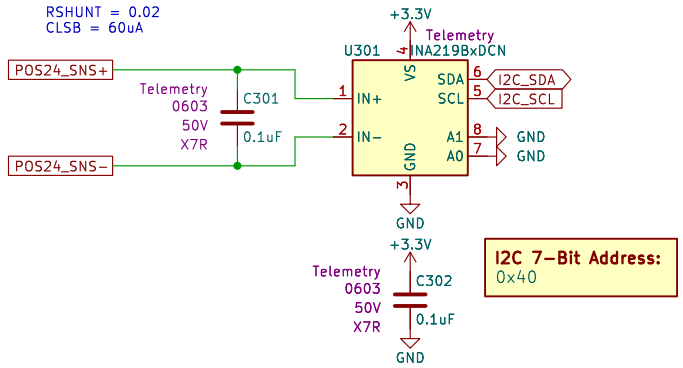

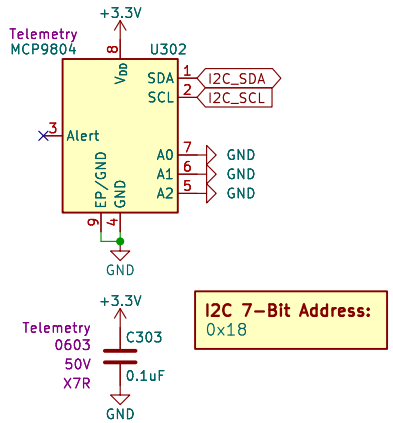

Drew Maatman

Sheet: /Power Input Telemetry/

File: power_input_telemetry.kicad_sch

Title:

Size: A	Date: 2023−05−12	**Rev: PRELIM**
KiCad E.D.A. kicad 7.0.1		Id: 3/21

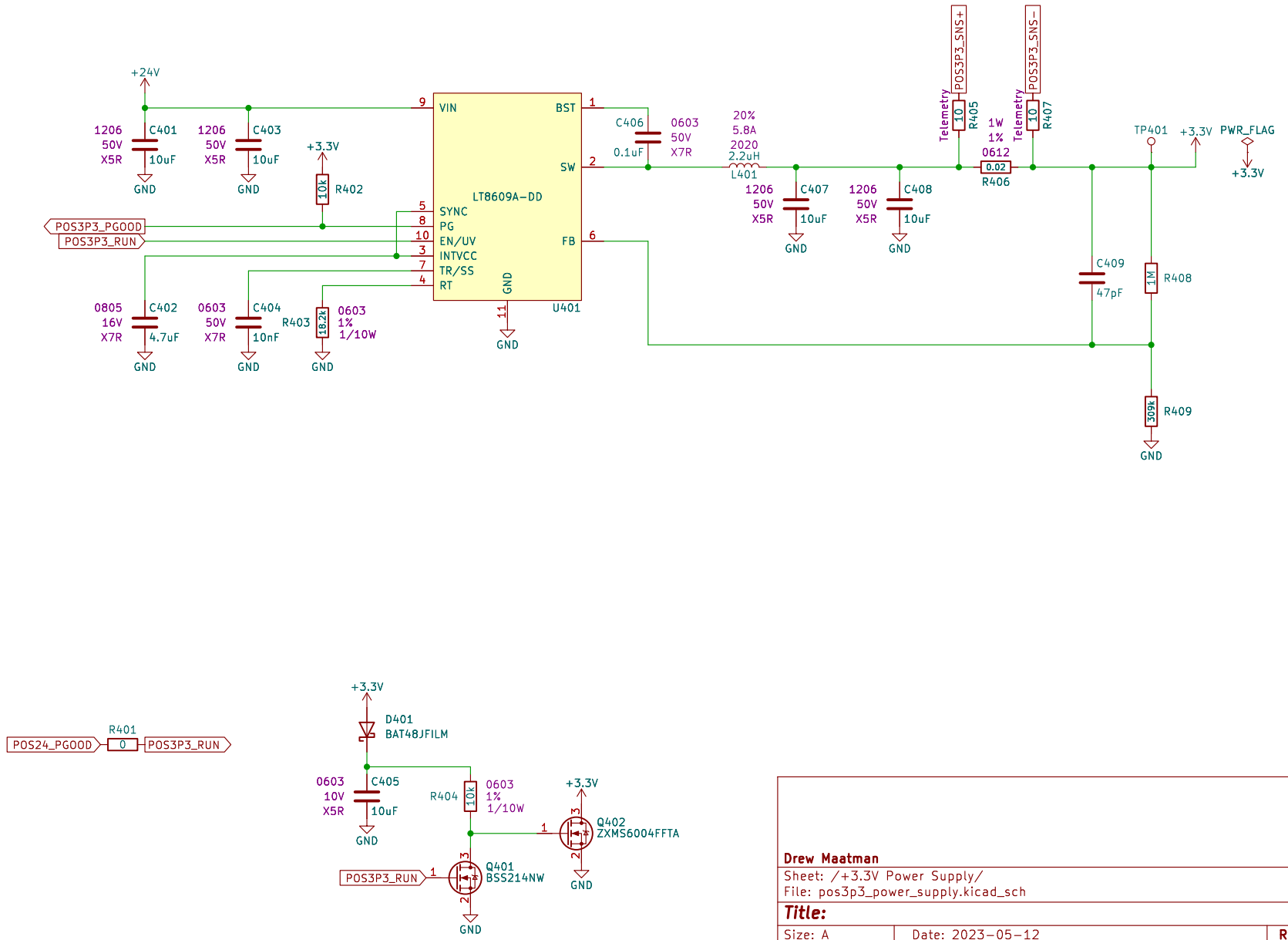

Drew Maatman

Sheet: /+3.3V Power Supply/

File: pos3p3_power_supply.kicad_sch

Title:

Size: A	Date: 2023-05-12	Rev: PRELIM
KiCad E.D.A. kicad 7.0.1		Id: 4/21

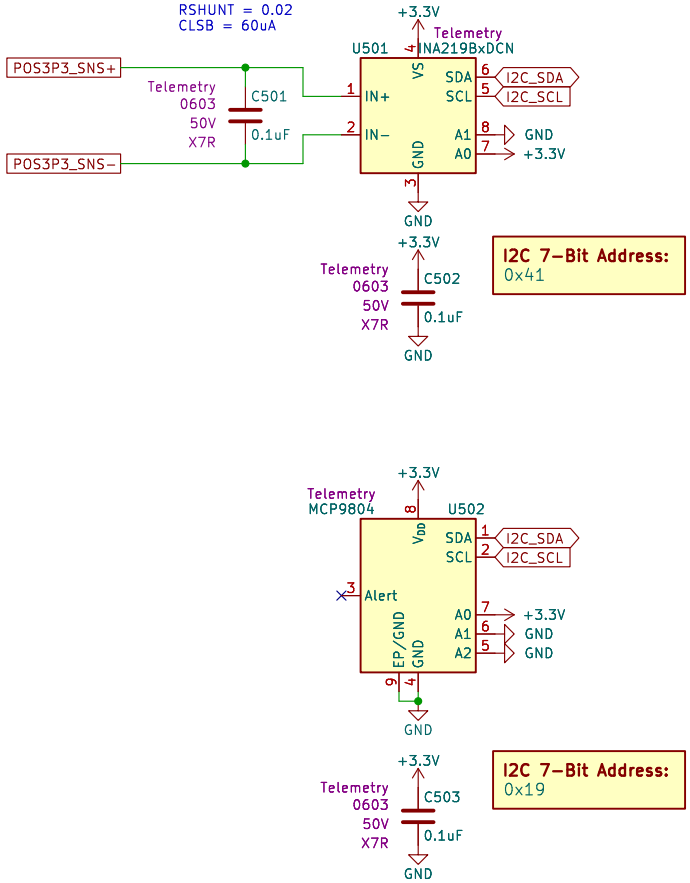

Drew Maatman

Sheet: /+3.3V Telemetry/

File: pos3p3_telemetry.kicad_sch

Title:

Size: A	Date: 2023-05-12	**Rev: PRELIM**
KiCad E.D.A. kicad 7.0.1		Id: 5/21

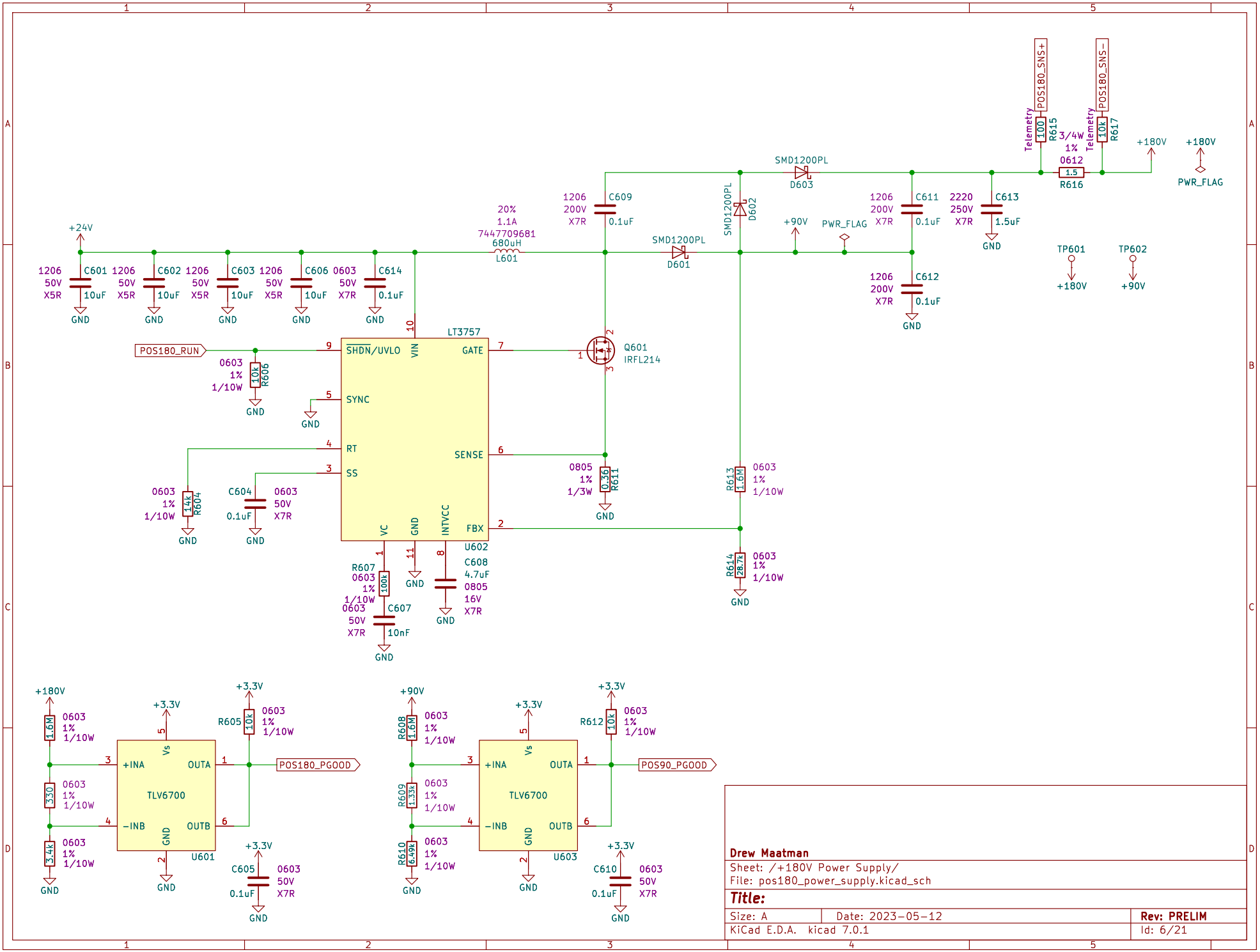

Drew Maatman

Sheet: /+180V Power Supply/

File: pos180_power_supply.kicad_sch

Title:

Size: A	Date: 2023-05-12	Rev: PRELIM
KiCad E.D.A. kicad 7.0.1		Id: 6/21

INA219 SCALING NOTES WRONG, RSHUNT = 1.5Ohm

From TIDU849

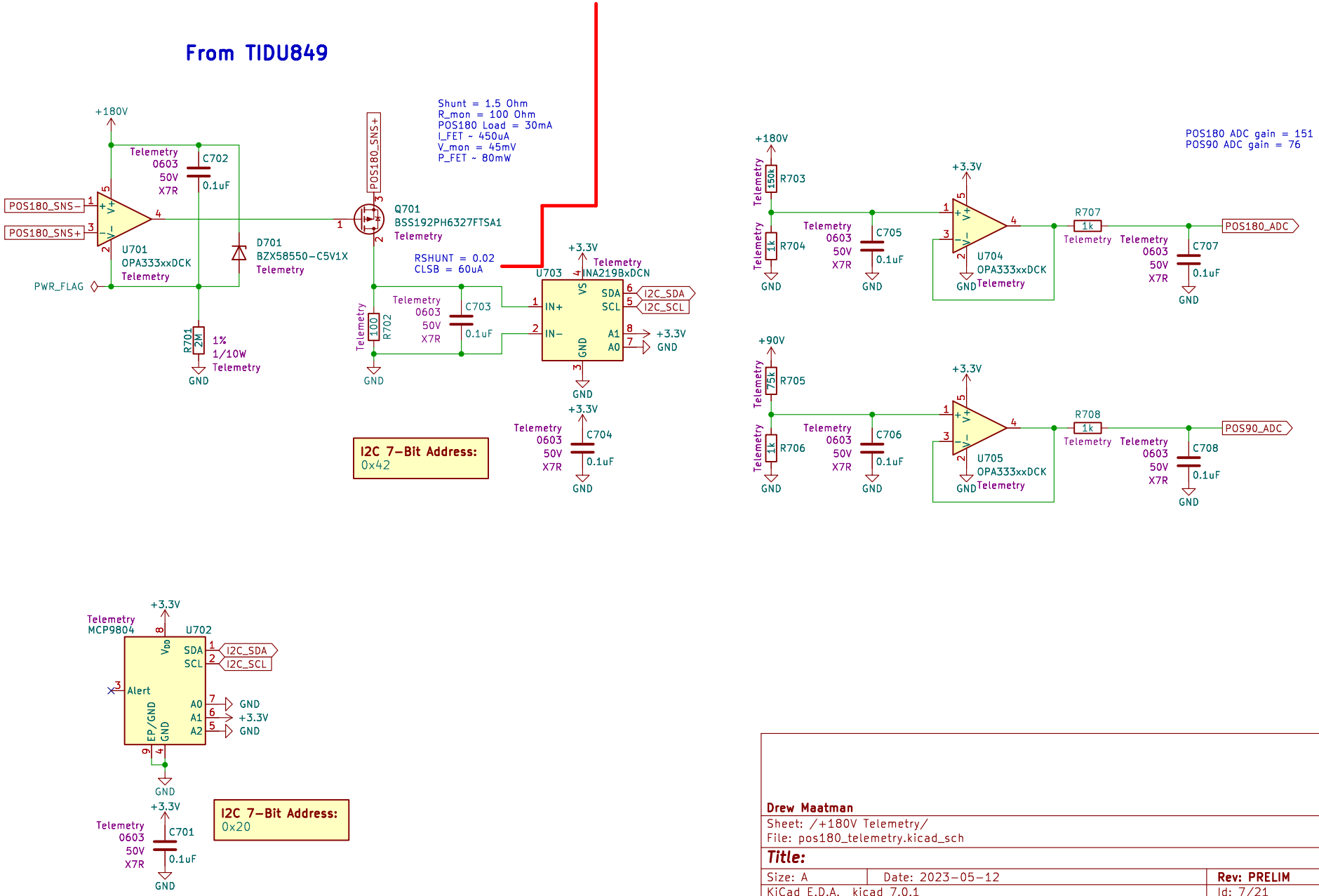

Drew Maatman

Sheet: /+180V Telemetry/

File: pos180_telemetry.kicad_sch

Title:

Size: A	Date: 2023−05−12	Rev: PRELIM
KiCad E.D.A. kicad 7.0.1		Id: 7/21

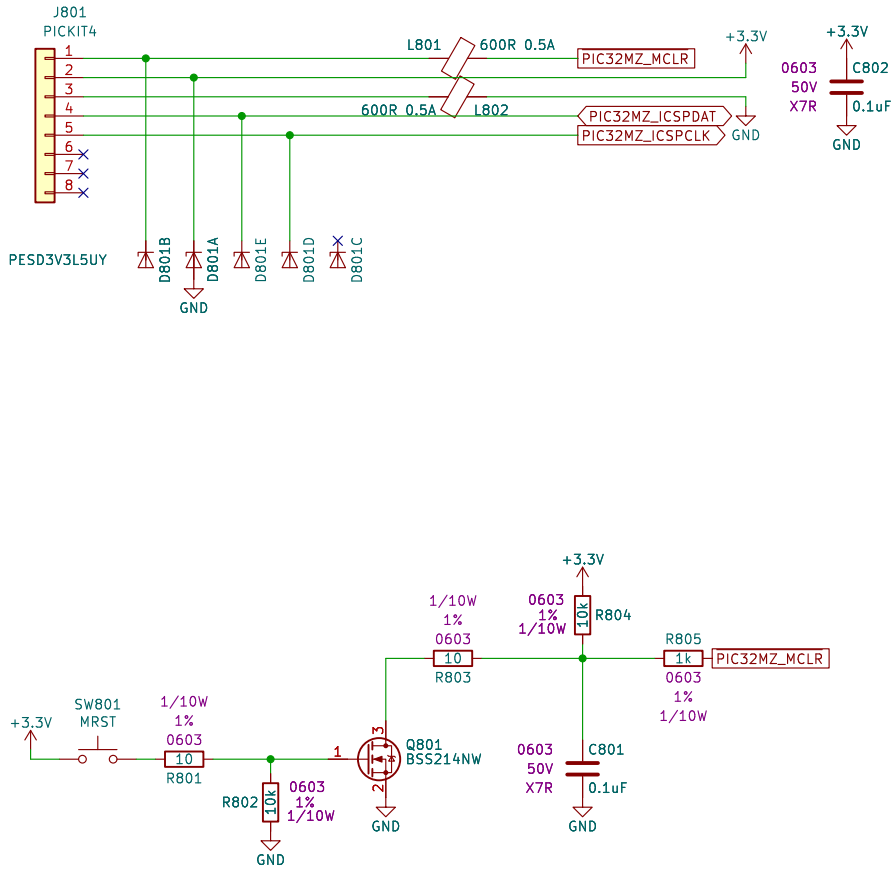

Drew Maatman

Sheet: /PIC32MZ Programming/

File: pis32mz_programming.kicad_sch

Title:

Size: A	Date: 2023-05-12	**Rev: PRELIM**
KiCad E.D.A. kicad 7.0.1		Id: 8/21

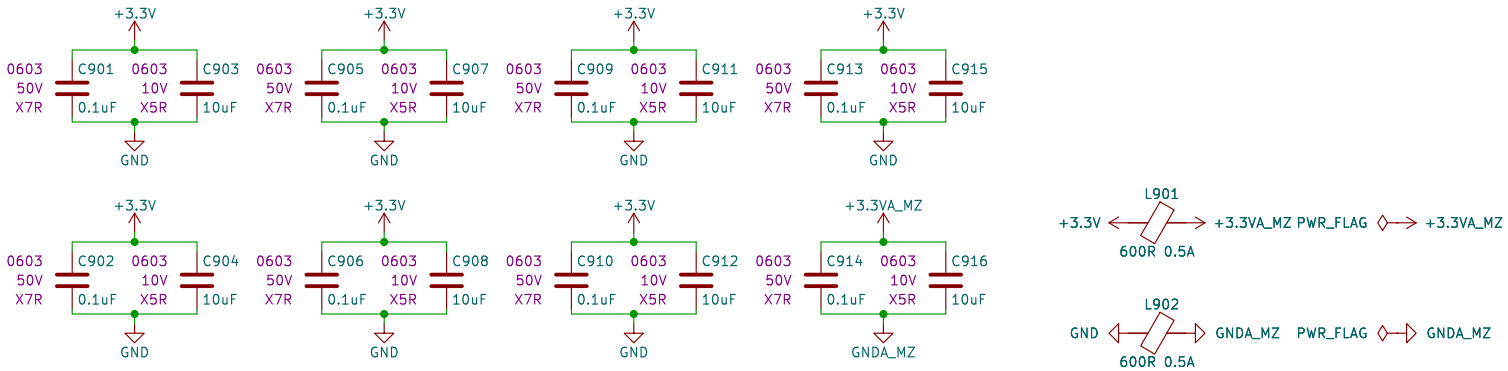

Drew Maatman

Sheet: /PIC32MZ Bypass/

File: PIC32MZ_Bypass.kicad_sch

Title:

Size: A	Date: 2023-05-12	**Rev: PRELIM**
KiCad E.D.A. kicad 7.0.1		Id: 9/21

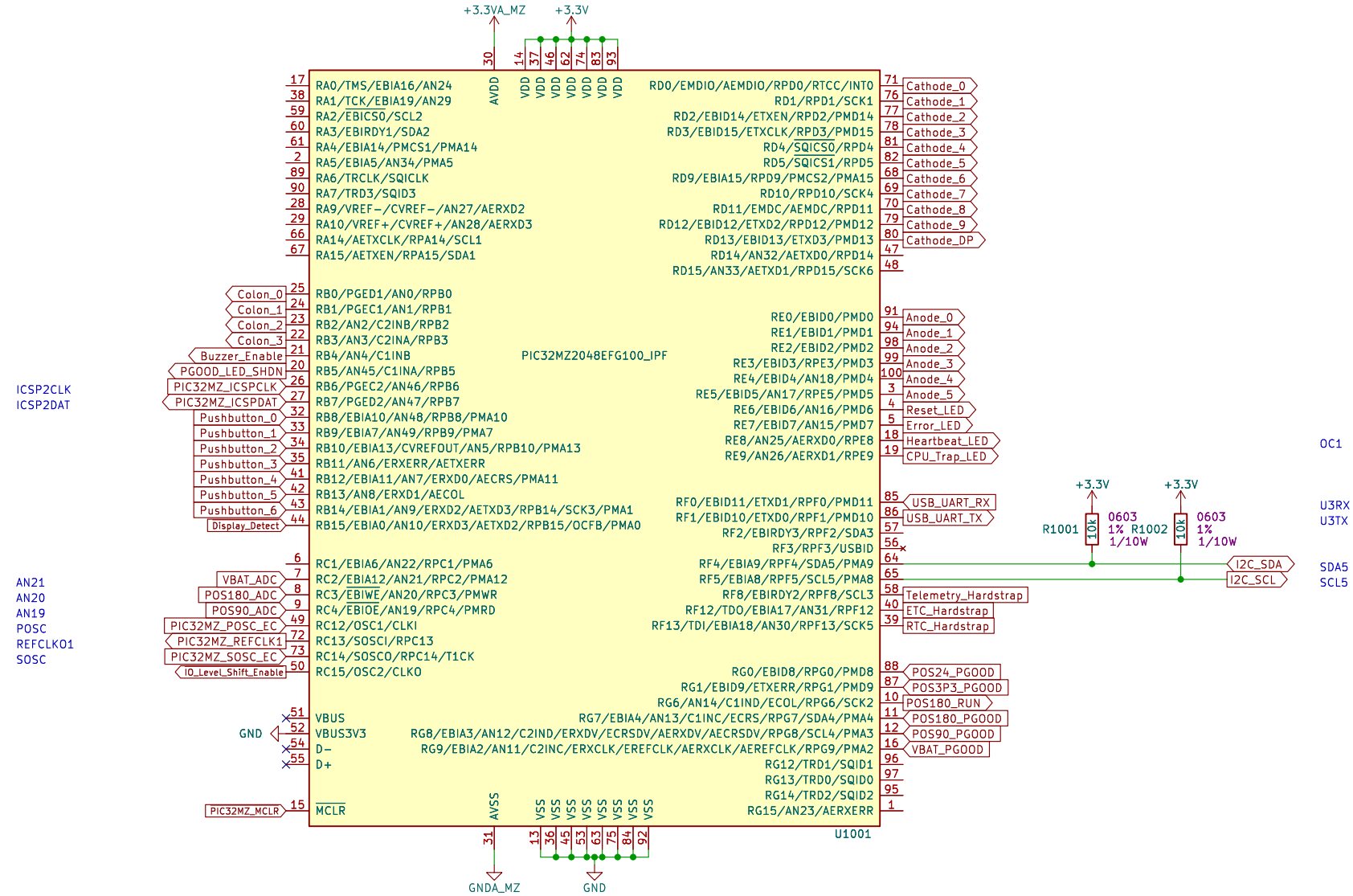

Drew Maatman

Sheet: /PIC32MZ/

File: PIC32MZ.kicad_sch

Title:

Size: A	Date: 2023-05-12	**Rev: PRELIM**
KiCad E.D.A. kicad 7.0.1		Id: 10/21

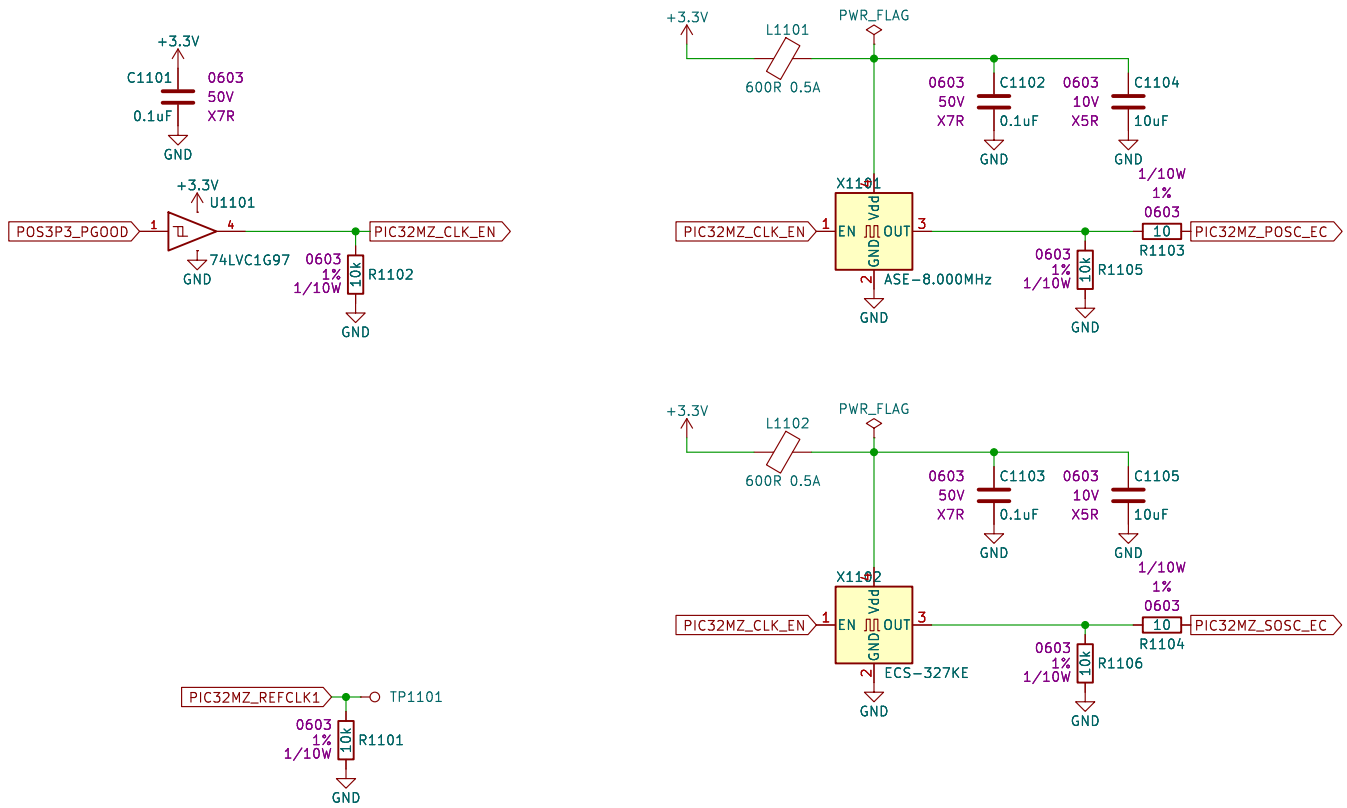

Drew Maatman

Sheet: /PIC32MZ Clocking/

File: PIC32MZ_Clocking.kicad_sch

Title:

Size: A	Date: 2023-05-12	**Rev: PRELIM**
KiCad E.D.A. kicad 7.0.1		Id: 11/21

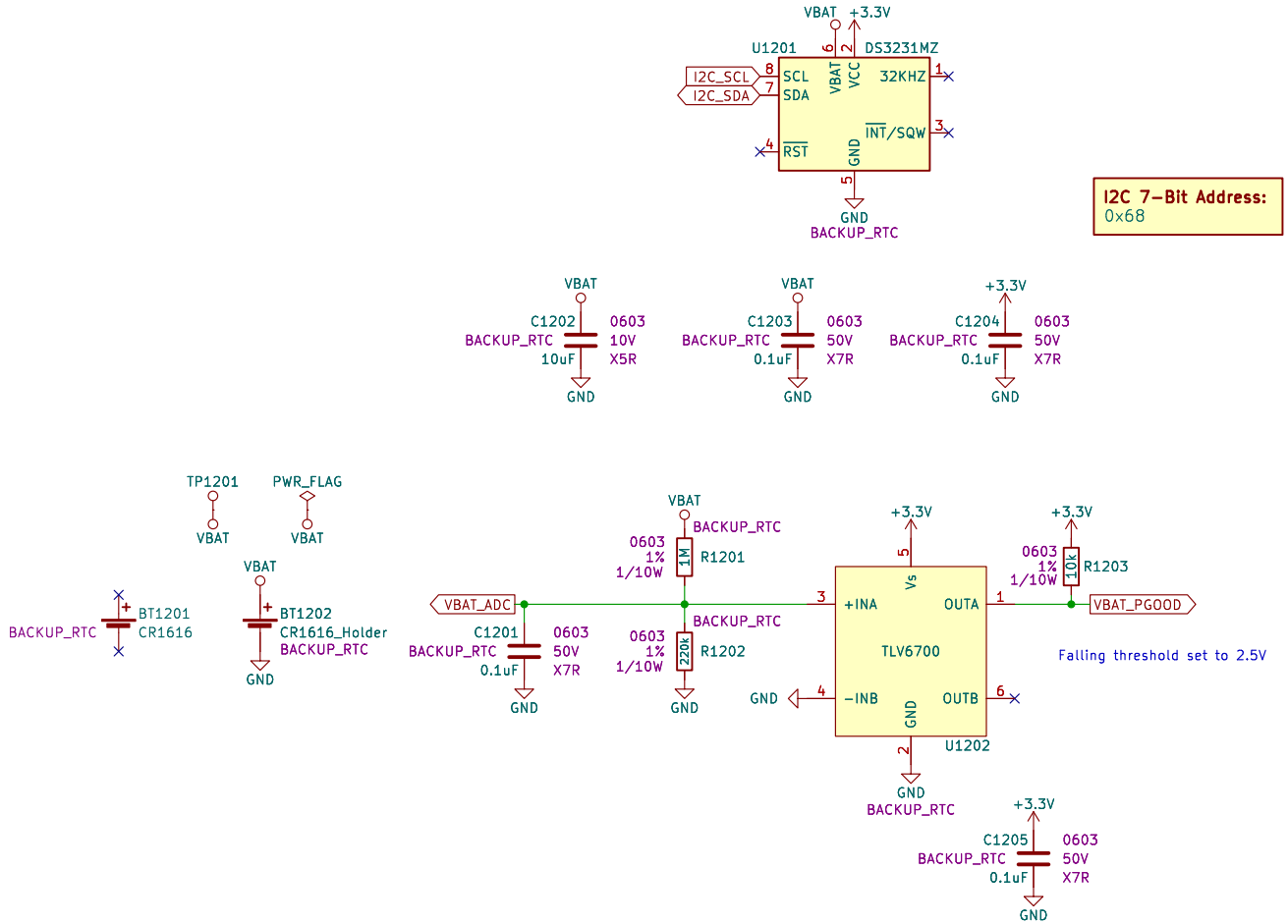

Drew Maatman

Sheet: /Backup RTC/

File: Backup_RTC.kicad_sch

Title:

Size: A	Date: 2023-05-12	Rev: PRELIM
KiCad E.D.A. kicad 7.0.1		Id: 12/21

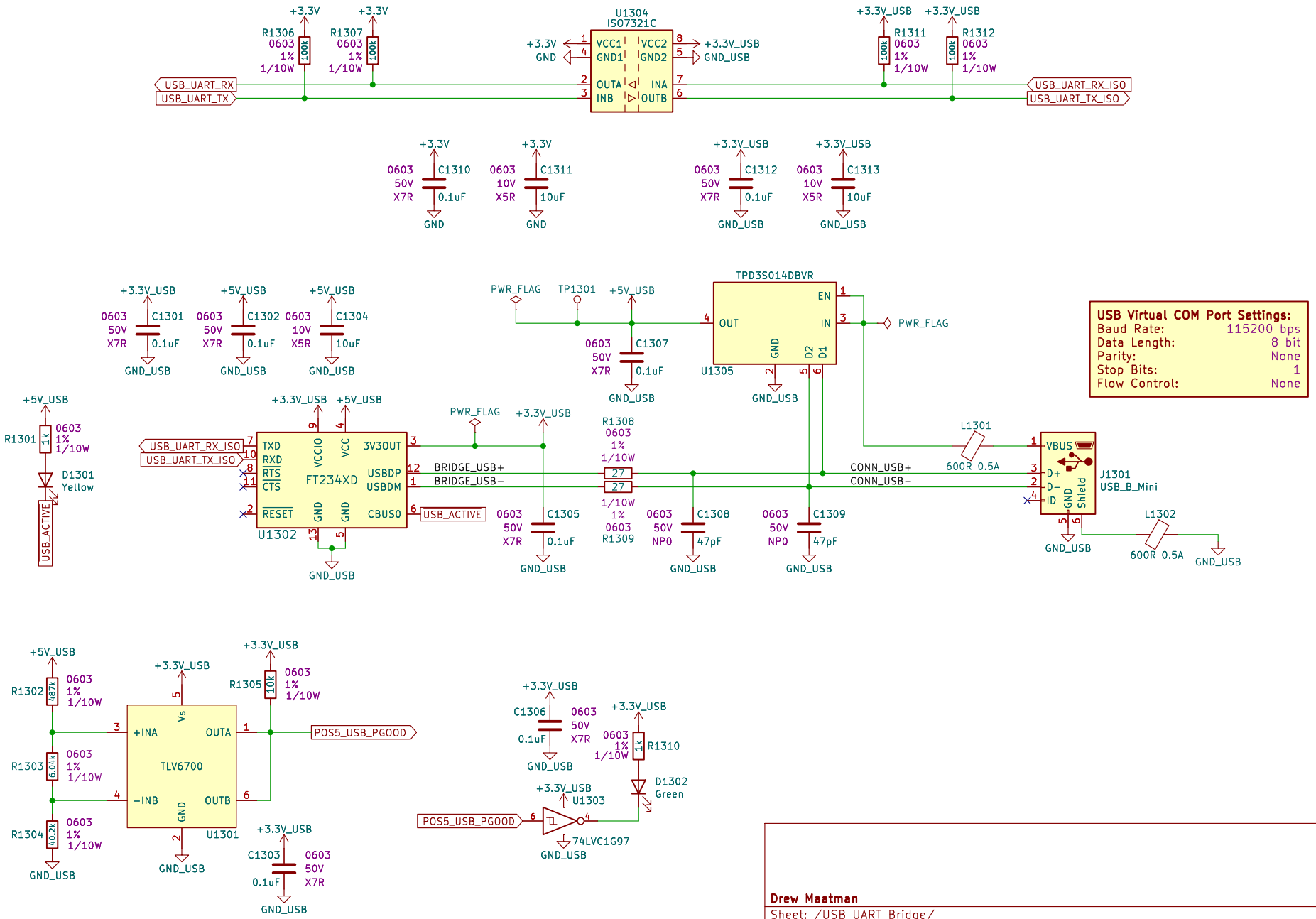

Drew Maatman

Sheet: /USB UART Bridge/

File: USB_UART_Bridge.kicad_sch

Title:

Size: A	Date: 2023-05-12	Rev: PRELIM
KiCad E.D.A. kicad 7.0.1		Id: 13/21

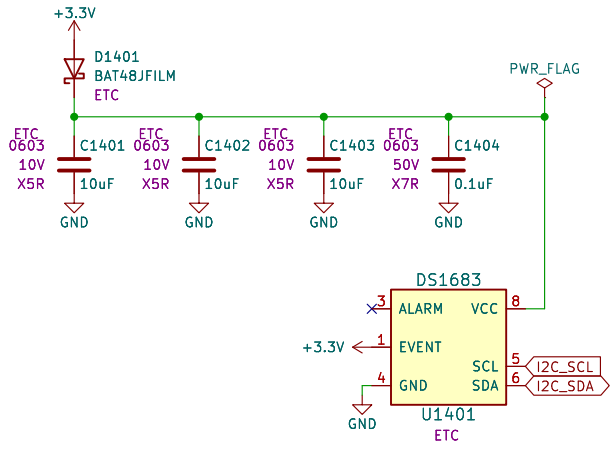

I2C 7-Bit Address:
0x6B

Drew Maatman

Sheet: /Platform ETC/
File: Platform_ETC.kicad_sch

Title:

Size: A	Date: 2023-05-12	**Rev: PRELIM**
KiCad E.D.A. kicad 7.0.1		Id: 15/21

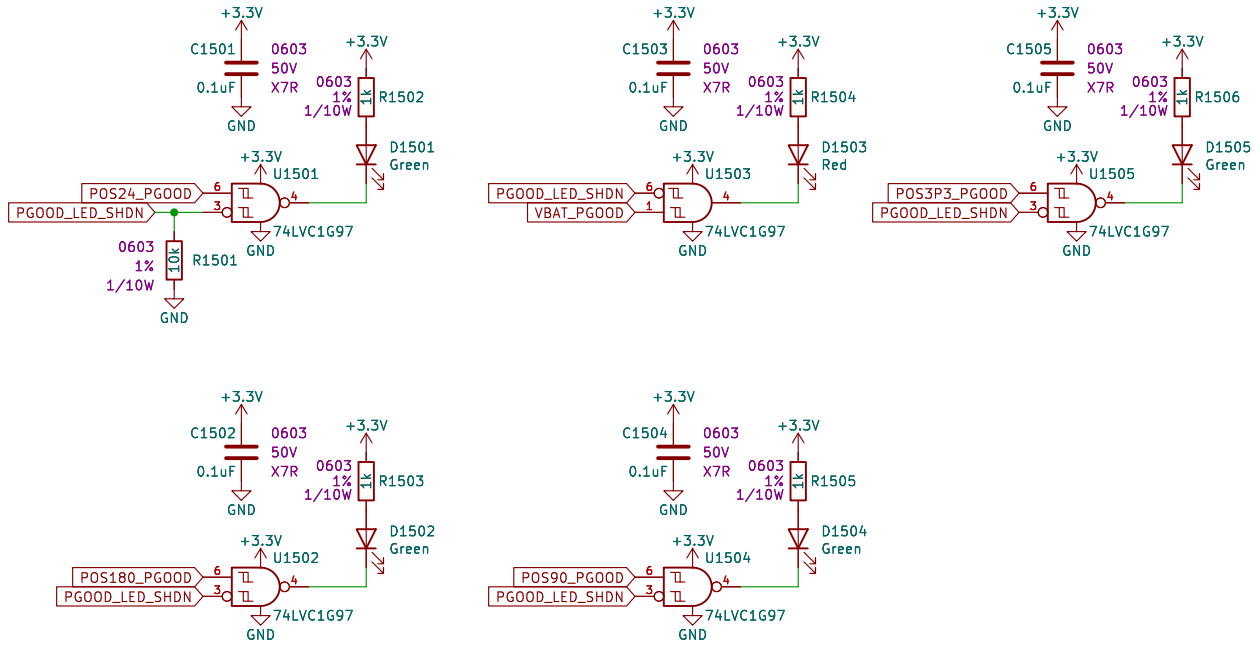

Drew Maatman

Sheet: /PGOOD LEDs/
File: PGOOD_LEDs.kicad_sch

Title:

Size: A	Date: 2023-05-12	**Rev: PRELIM**
KiCad E.D.A. kicad 7.0.1		Id: 16/21

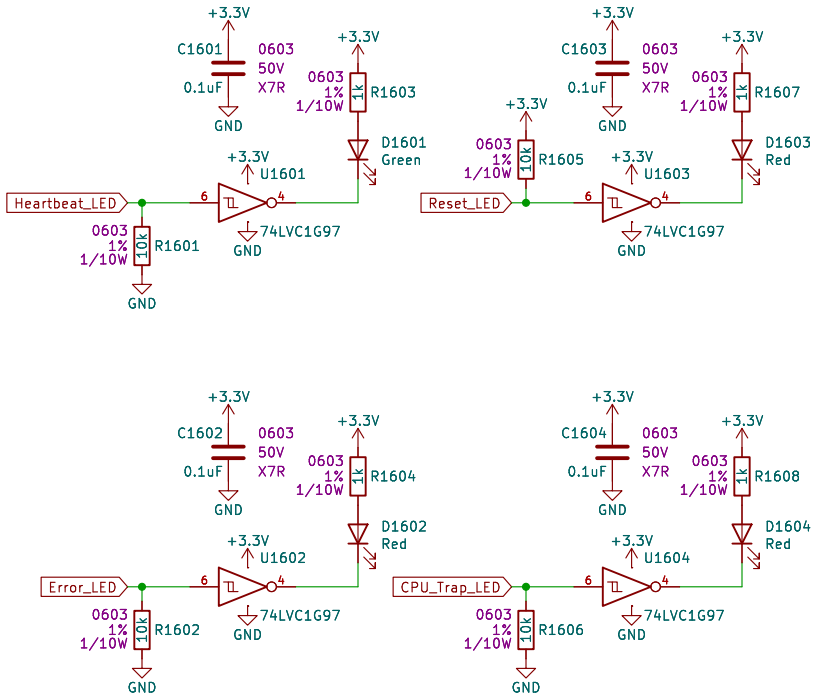

Drew Maatman

Sheet: /Status LEDs/

File: Status_LEDs.kicad_sch

Title:

Size: A	Date: 2023-05-12	**Rev: PRELIM**
KiCad E.D.A. kicad 7.0.1		Id: 17/21

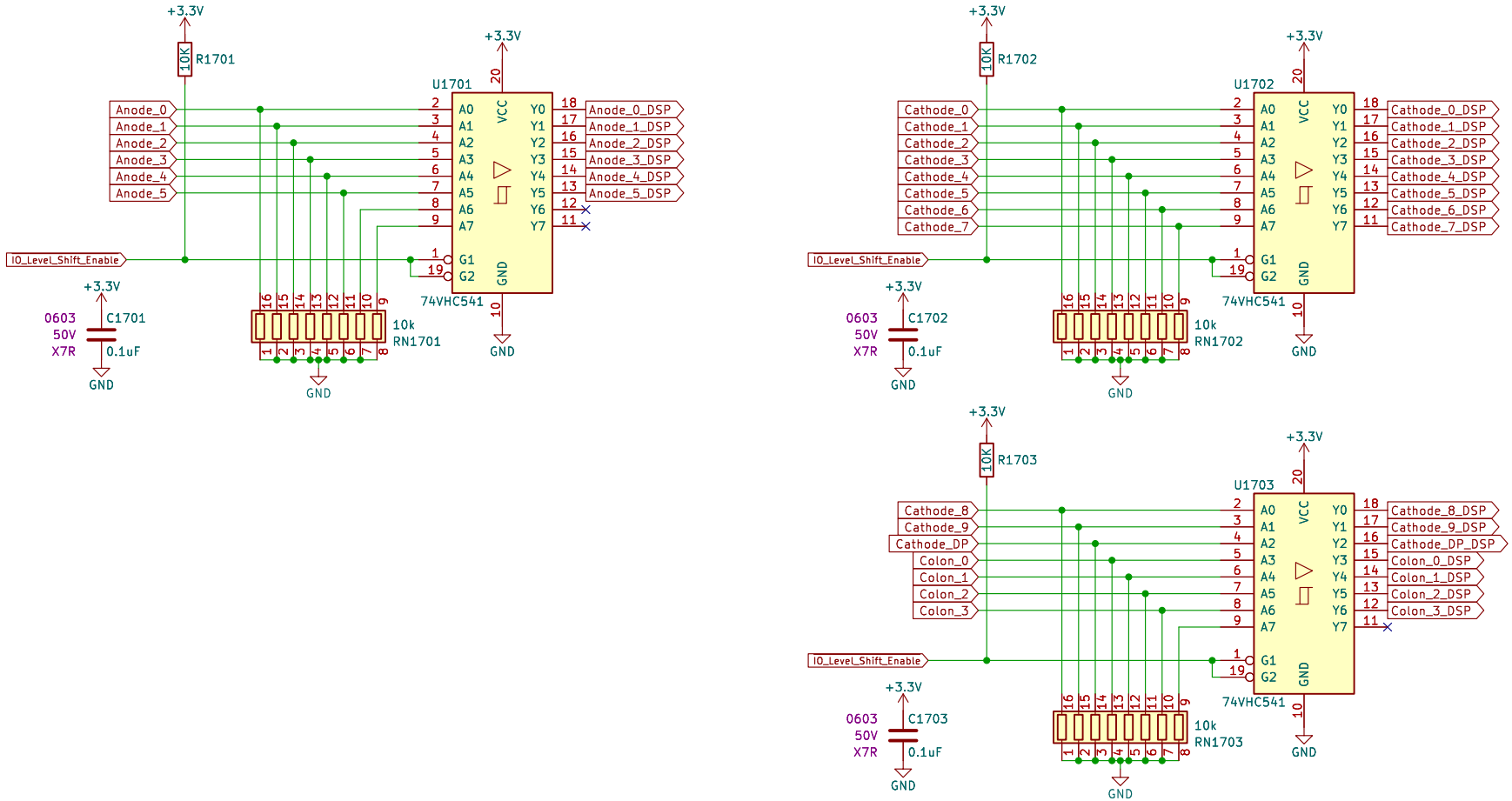

Drew Maatman

Sheet: /IO Buffers 1/

File: IO_Buffers_1.kicad_sch

Title:

Size: A	Date: 2023-05-12	**Rev: PRELIM**
KiCad E.D.A. kicad 7.0.1		Id: 18/21

CONSIDER ADDING LOAD SWITCH FOR CARRIER BOARD +3.3v

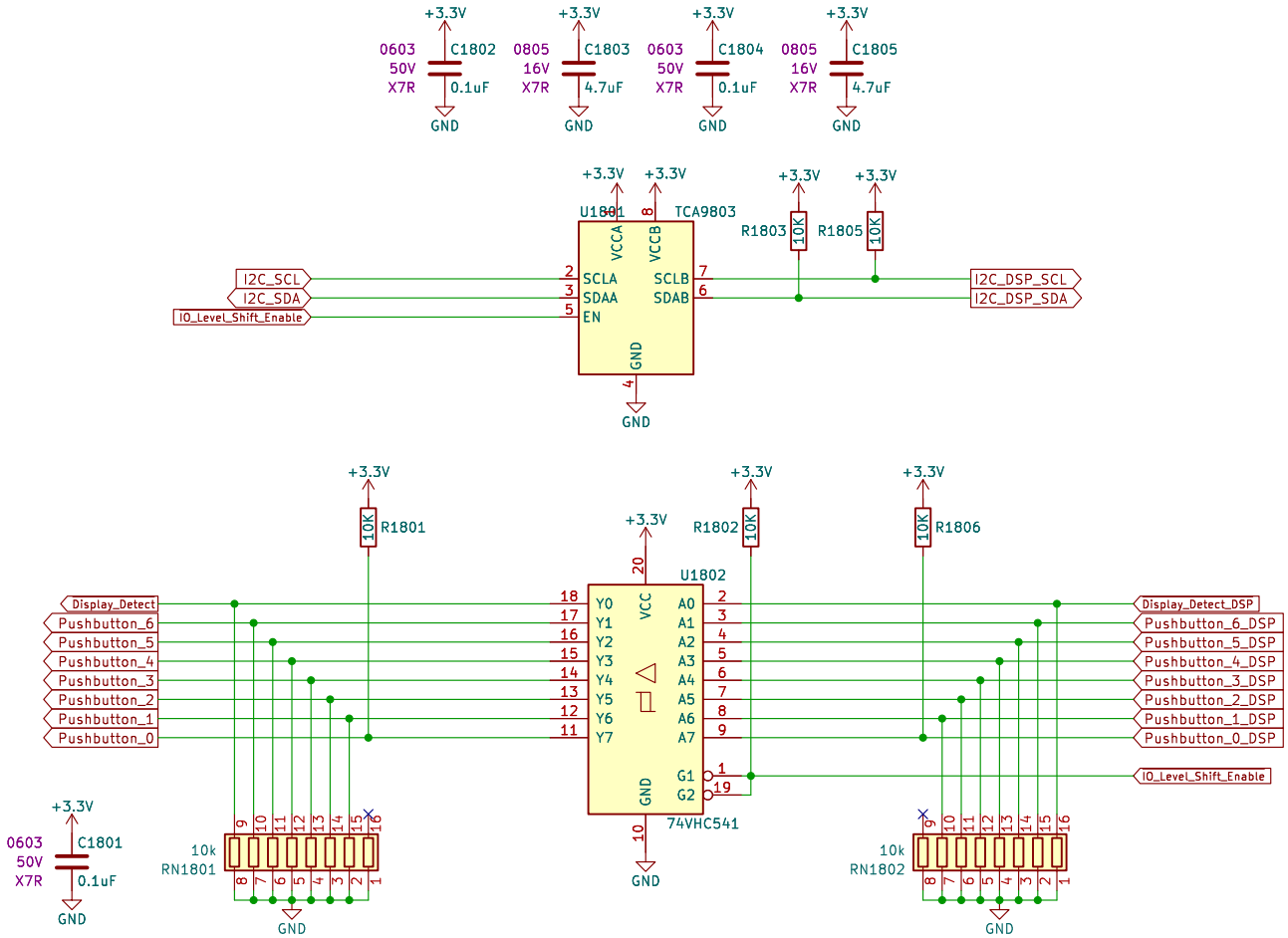

Drew Maatman		
Sheet: /IO Buffers 2/		
File: IO_Buffers_2.kicad_sch		
Title:		
Size: A	Date: 2023-05-12	Rev: PRELIM
KiCad E.D.A. kicad 7.0.1		Id: 19/21

FIND A CONNECTOR THAT CAN HANDLE HIGH VOLTAGE AND SIGNALLING THAT ISNT AWFUL

CONSIDER USING 0.1" SMT HEADERS - MAY BE TOO LARGE

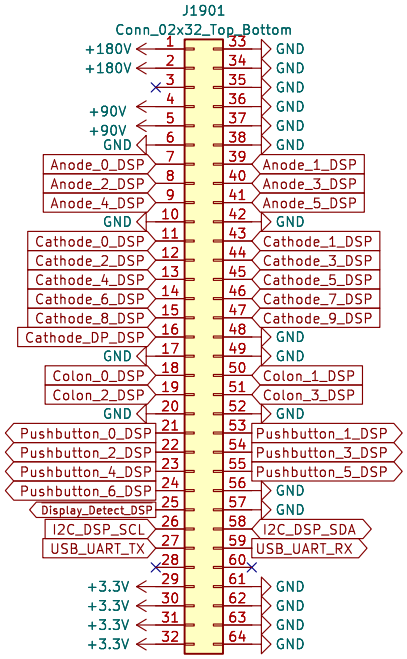

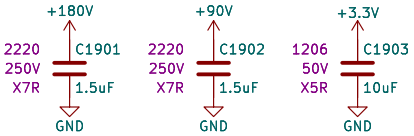

Drew Maatman		
Sheet: /IO Connectors/		
File: IO Connectors.kicad_sch		
Title:		
Size: A	Date: 2023-05-12	Rev: PRELIM
KiCad E.D.A. kicad 7.0.1		Id: 20/21

ENSURE STACK IS CORRECT HEIGHT

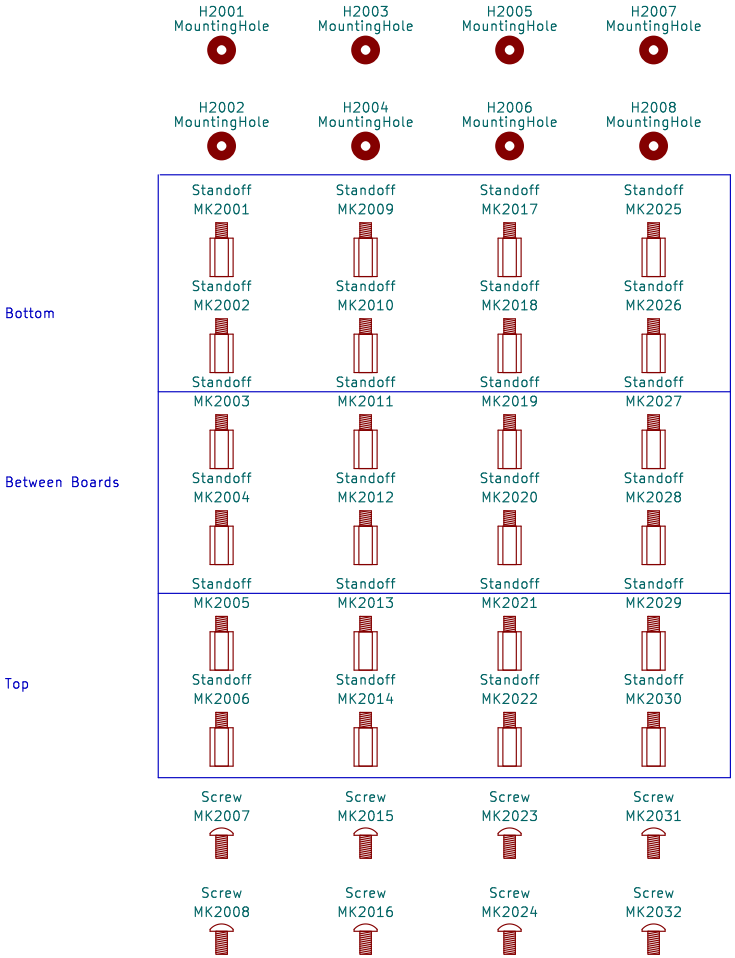

Drew Maatman

Sheet: /Mechanical/
File: Mechanical.kicad_sch

Title:

Size: A	Date: 2023-05-12	**Rev: PRELIM**
KiCad E.D.A. kicad 7.0.1		Id: 21/21

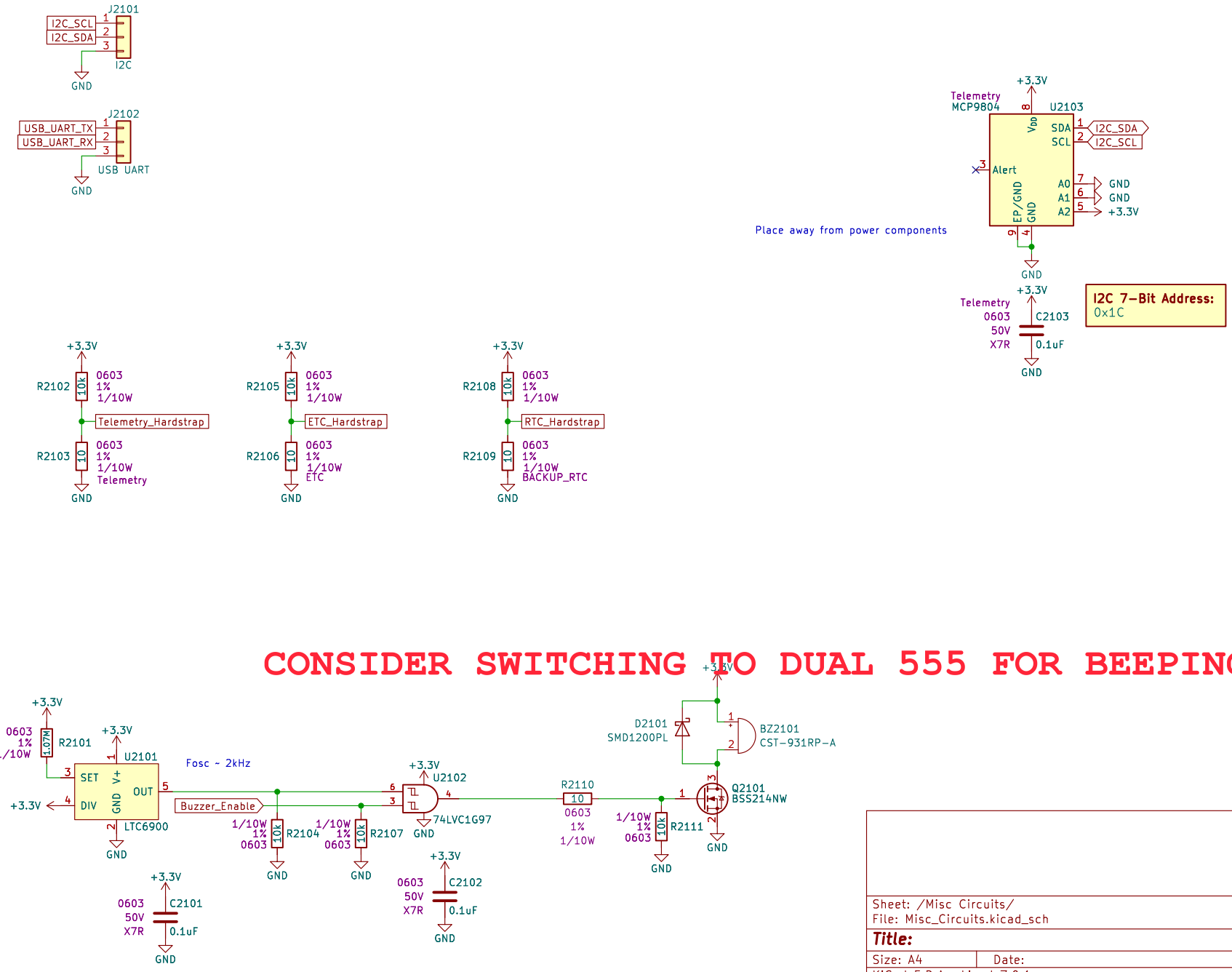
J2101
I2C_SCL
I2C_SDA
I2C
GND
J2102
USB_UART_TX
USB_UART_RX
USB UART
GND
+3.3V
Telemetry
MCP9804
U2103
VDD
SDA
SCL
Alert
A0
A1
A2
EP/GND
GND
I2C_SDA
I2C_SCL
GND
GND
+3.3V
Place away from power components
Telemetry
0603
50V
X7R
C2103
0.1uF
I2C 7-Bit Address:
0x1C
R2102
10k
0603
1%
1/10W
Telemetry_Hardstrap
R2103
10
0603
1%
1/10W
Telemetry
R2105
ETC_Hardstrap
R2106
ETC
R2108
RTC_Hardstrap
R2109
BACKUP_RTC
CONSIDER SWITCHING TO DUAL 555 FOR BEEPING
R2101
1.07M
U2101
SET
DIV
OUT
V+
LTC6900
Fosc ~ 2kHz
Buzzer_Enable
R2104
R2107
U2102
74LVC1G97
R2110
D2101
SMD1200PL
BZ2101
CST-931RP-A
Q2101
BSS214NW
R2111
C2101
C2102
Sheet: /Misc Circuits/
File: Misc_Circuits.kicad_sch
Title:
Size: A4
Date:
Rev:
KiCad E.D.A. kicad 7.0.1
Id: 22/21