DTM Nixie Tube Clock

Designed from March of 2016 to October of 2017

Overvoltage/Undervoltage/Reverse Polarity Lockout

Input power enters from a center-positive DC barrel jack, and is gated by an LTC4365 input monitor and two series N-channel MOSFETs. Input voltage is a nominal 24V with a 22V undervoltage lockout and 26V overvoltage lockout. Input voltage presence is sensed by two signals sent to the microcontroller. The input power is fused at 3 Amps and the 24V monitored output voltage is the common voltage to all power converts, VCOM.

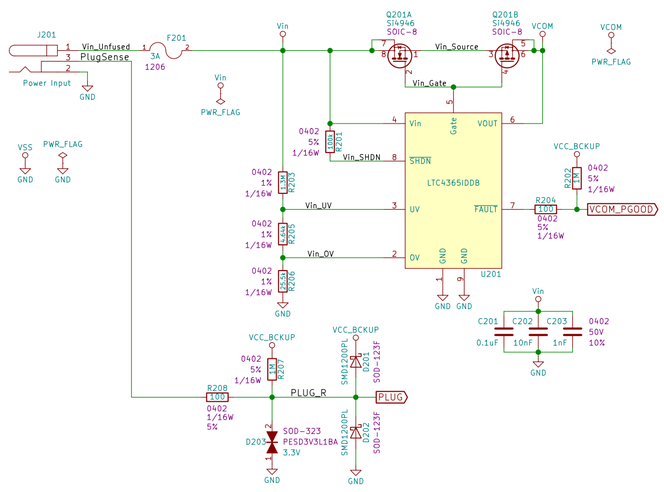

Valve High Voltage Supply
Hybrid Boost Converter/Voltage Multiplier
+180V, 30mA @ 800kHz

This boost converter, controlled by an LT3757, boosts the 24V VCOM bus up to 180VDC, at a lethal 30mA. This high voltage is needed to "strike" the nixie tubes and neon bulbs into conduction so that they will illuminate. The controller is actually regulating a 90V output, which is then doubled using diodes and high voltage ceramic capacitors. The output of this supply is the common vacuum voltage rail, VVV

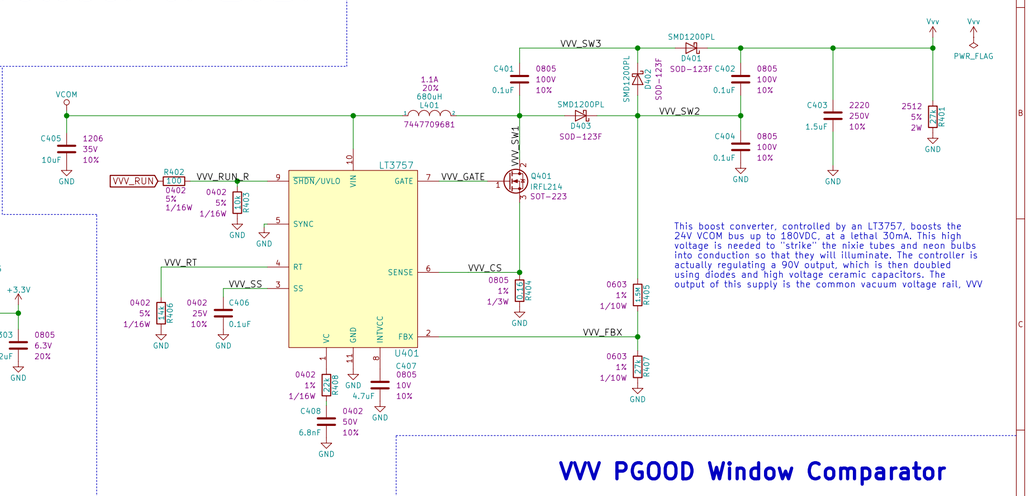

Monolithic Buck Switching Regulator
+3.3V, 300mA @ 2.2MHz

Common Voltage VCOM is switched by an LT3973, a wide input voltage buck converter with an integrated switch.
This buck converter operates at a blistering 2.2MHz and supplies the main logic voltage rail, VDD/VCC depending on logic technology.
at 300mA. It has a power good signal (VCC_PGOOD) that notifies the microcontroller that the logic rail is up and running when input power is applied.

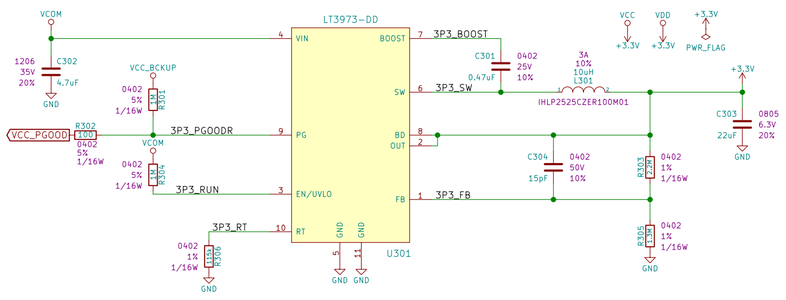

VVV PGOOD Window Comparator

This LT6700-1 window comparator monitors the VVV tube supply voltage (+180V) and presents a digital signal to the PIC representing if the output is in regulation or not. The digital signal "VVV_PGOOD" will be high if the VVV rail is within 10% of 180 Volts. If it is not, the PIC will enter an error state since something is wrong with the boost supply circuit above, or the supply is starting up, so the PIC will wait to start displaying the time. Surpisingly, with 1% tolerance resistors, this window comparator is fairly accurate even when monitoring such a high voltage.

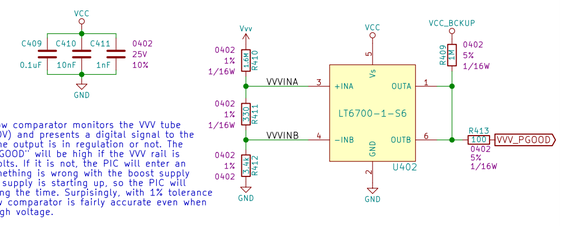

8 Bit PIC Microcontroller

This PIC16LF1519 8-bit microcontroller is the heart of the control circuitry for the clock. It takes in various input signals and operates on them To accurately keep time, multiplex the nixie tubes, and keep track of time when input power is removed. Its program was written in the C programming language and compiled and assembled using Microchip's MP Lab X IDE. The firmware is uploaded via a pickit 3 programmer in circuit. It operates at around 5 million instructions per second. More stats can be seen below.

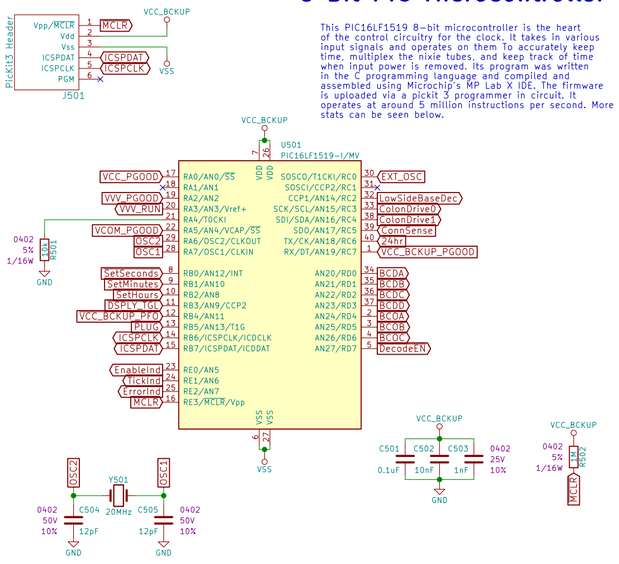

32.768kHz Timekeeping Oscillator

This CMOS oscillator sends pulses to the PIC at precisely 32.768 pulses per second. This number is chosen since it can easily be divided down with a pre-scalar in the pic to an accurate and stable 1Hz signal, which is used for timekeeping and flashing the colons. This part is physically built using a precisely cut piece of quartz, which vibrates electrically at a fundamental frequency of 32.768kHz. This weak high impedance signal is buffered within the part to drive a stronger signal to the PIC for timekeeping.

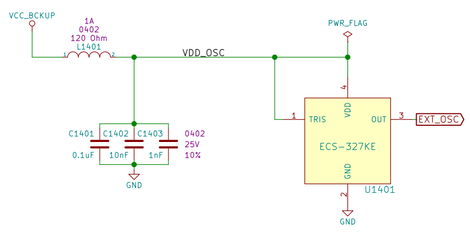

BCD to Decimal Decoder

This Binary-Coded-Decimal to Decimal decoder takes in 4-bit BCD parallel signals from the PIC and decodes them to individual decimal bits to drive the 10 low side switches that control the multiplexed cathodes of the Nixie tubes. Essentially this allows four digital signals from the PIC to control 10 high voltage signals from the Nixie tubes, selecting which numeral to display in any of the six digits on the clock. BCD and BCD encoding for the main display signals was chosen to free up other I/O signals from the PIC for other purposes.

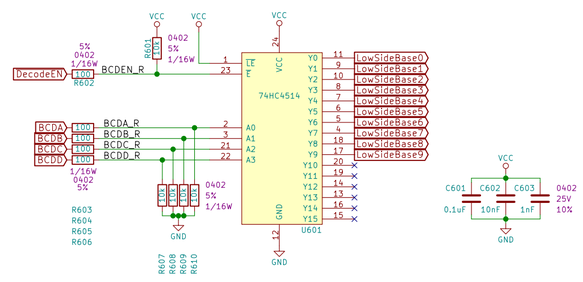

Octal to Decimal Decoder

An octal to decimal decoder controls which inidividual digit is turned on when multiplexing the clock. Three bits control six high side PNP/NPN switches to apply the +180V VVV bus voltage to the anode of each tube. This data is loaded from the PIC at around 3kHz in parallel with the BCD to Decimal decoder to the left in order to control all 66 Nixie tube connections via only 8 signals.

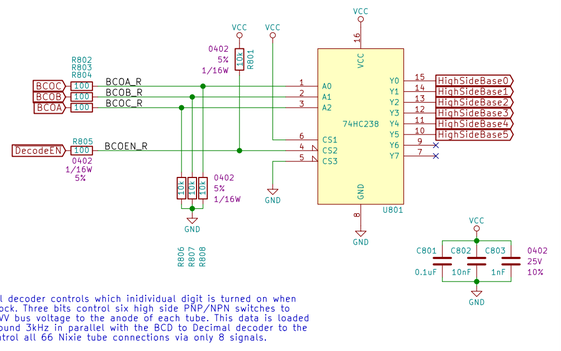

Time Set Pushbuttons

Three pushbuttons trigger interrupts on the PIC to set the time. Minutes will not change when setting seconds (same with minutes to hours) and the PIC will wait about 3.5 seconds before resuming timekeeping after setting the time to avoid both the pushbutton and normal timekeeping functions from incrementing the time at once. Each pushbutton is debounced to ensure only one increment is executed per each press of a button when setting the time.

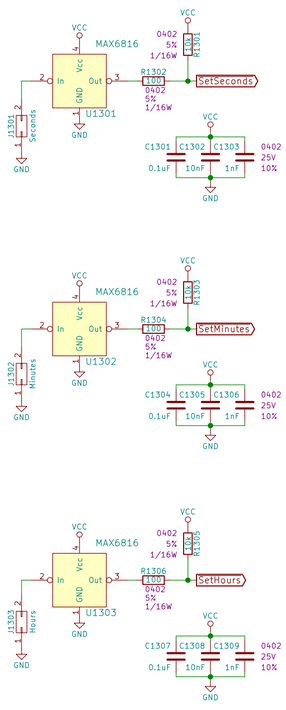

Backup VCC Supply

In order for the clock to keep accurate time while the input power is removed, a backup power supply is needed so that the microcontroller and timekeeping oscillator have power without the standard 3.3V supply active. This backup supply utilizes a two supercapacitor series stack to store plenty of energy for the clock to run on when input power is removed. This LTC3226 supercap charger controller monitors the 3.3V VCC/VDD rail and when the rail drops when input power is removed, it switches to using charge stored on the supercap stack to supply voltage and a miniscule amount of quiscent current to the microcontroller and oscillator. The PIC monitors when the input drops and switches to a low supply current sleep state, turning off all funtionality except timekeeping to make the charge on the supercap stack last as long as possible.

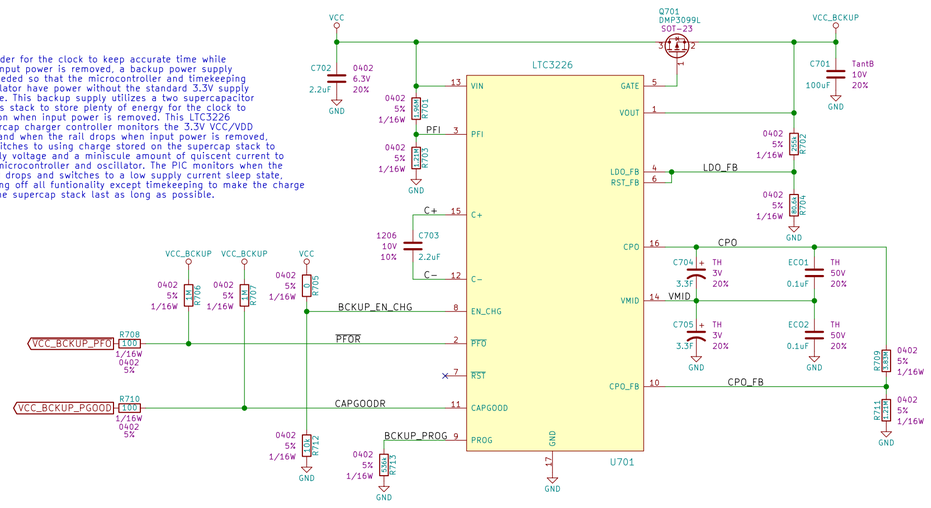

Other Functionality

A fourth pushbutton is used to turn the clock display on and off. The PIC simply toggles the state of the high voltage VVV rail when it notices this button pressed. A three input AND gate switches an LED on when three important voltage rails have their power good flags set, showing that the voltage rails are in regulation when debugging the clock. Three LEDs are switched by the PIC to show the tick 1Hz timekeeping signal, if the clock is in an "enable" state, or if the clock is in an "error" state. Finally, a jumper sets whether or not the clock displays 24 hour or 12 hour time.

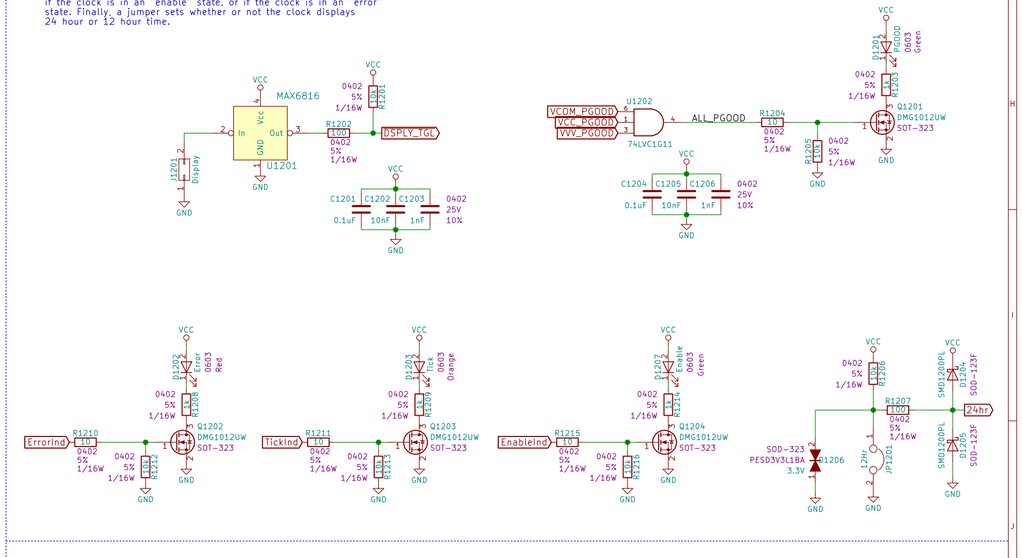

High Side BJT Switches

The low voltage digital signals from the BCD to Decimal decoder drive the base of high voltage NPN BJT transitors, which pull the base of high voltage PNP transistors down in order to pull current through the bases on these PNP's. This in turn lets current flow from emitter to collector on these high voltage PNP's and fully saturates these transistors, applying the VVV high voltage rail to the anodes on each corresponding Nixie tube through a current limiting resistor. A three bit parallel low voltage digital bus from the PIC controls six high voltage signals using both these switches and the above BCD to Decimal decoder. In order for the multiplexing scheme to work properly, only one anode and one cathode is switched on at once. In order to make all of the tubes appear on at once, the clock displays each anode for around 3ms, which is the multiplexing period. Becuase of there being six tubes, the refresh rate of the clock is therefore 60Hz. Each tube needs a 200us blank time in order for artifacts of previously displayed tubes to not appear in the currently conducted tube. This all means that each PNP/NPN pair will switch on and off at least 3000 times per second in order for the clock to appear "completely on", even though only one tube is conducting at once. This is how multiplexing a common anode display works.

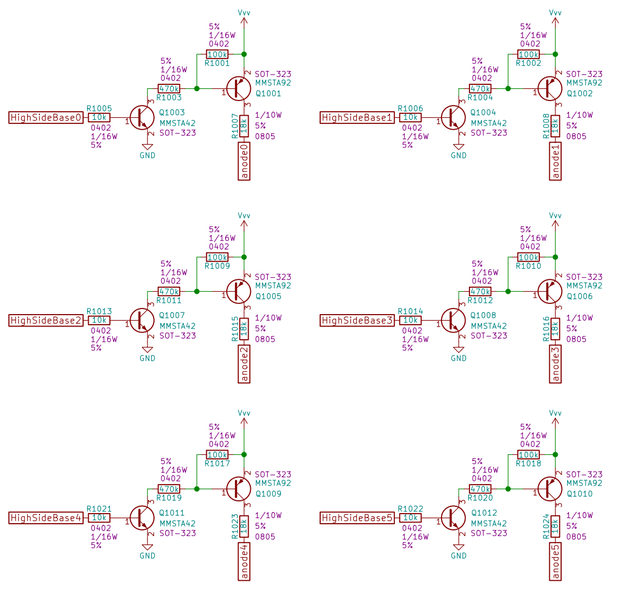

Colon Switches and Drivers

The PIC drives high voltage NPN's through a buffer to control conduction of the colon neon bulbs directly. Whenever the seconds are incremented when keeping time, the PIC toggles the state of these neon bulbs, so that they switch at around 500mHz. The "tick" LED reflects the state of these neon bulbs for debugging purposes.

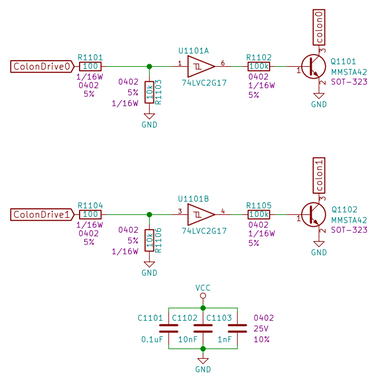

Lowside BJT Switches

11 low voltage logic signals drive the bases of high voltage NPN's directly (or buffered) from the PIC to drive the cathodes of the Nixie tubes, selecting which numeral is showing. These 11 signals are controlled by only five pins on the PIC, meaning that all 66 connections on the tubes are controlled by only 8 pins total. This is accomplished through multiplexing and parallel signal decoding. The multiplexing scheme works by only applying the high voltage VVV rail to one Nixie anode at a time through the BCD/Decimal decoder and high side switches shown above and to the left. Only one cathode is switched low to allow current flow through the selected tube and numeral within that tube using these low side switches and the BCD/Decimal decoder above.

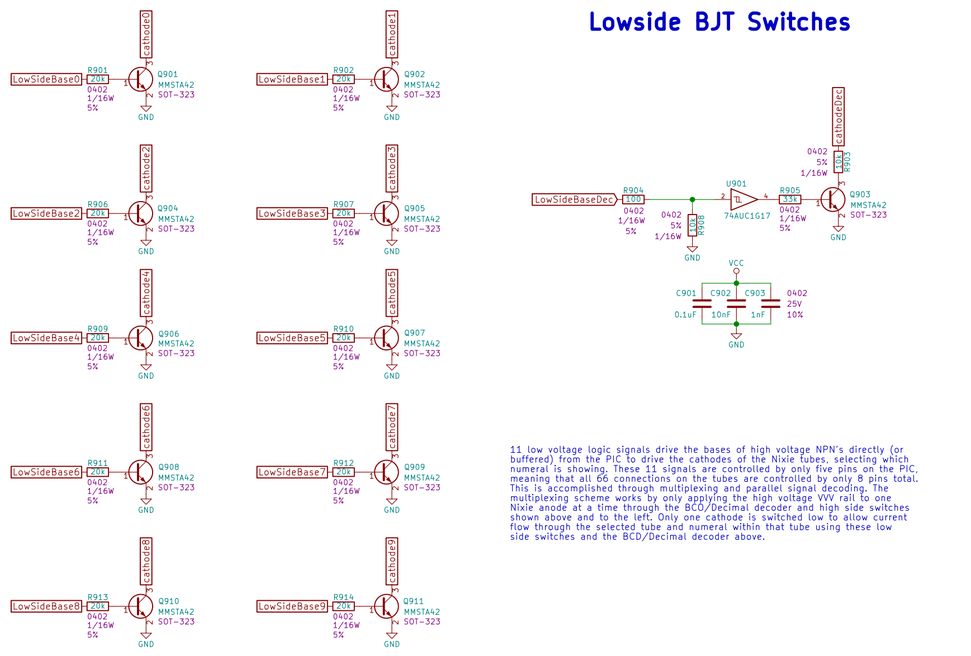

Display PCB

An external PCB holds all of the display elements for the clock, including six IN-14 Nixie tubes and two neon bulbs as separators. It merges the connections for all cathodes together and keeps all the anodes separate for multiplexing, since the tubes are a common anode configuration. A connection sensing safety feature is also implemented with the mounting holes on this board. All connection headers and mounting holes line up perfectly with the control board beneath to allow the two to seemlessly integrate. The IN-14 Nixie tubes included on the board were most likely manufactured in Russia sometime between the 1950's and 1990's, and are not produced anymore, meaning the six on each board are getting increasingly rare and harder to find.

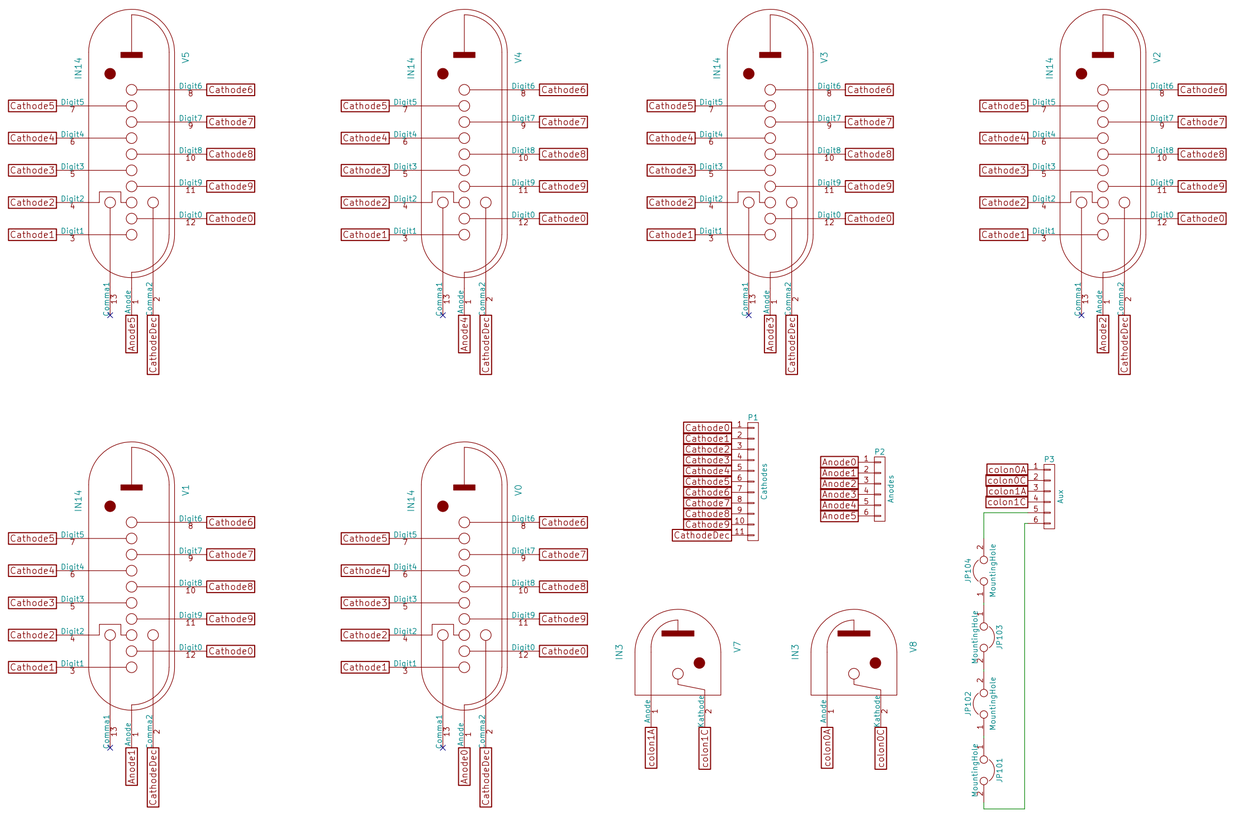

External Connections To Display PCB

All of the control and power circuitry for the clock is housed on a single lower PCB, while the tubes that display the time are situated on another board that is stacked on top. This was done so that other types of Nixie tubes could be used in the future using the same control board, and to decrease the complexity of the PCB layout. All of the anode and cathode connections from the high side and low side BJT switches are broken out to headers that complete the circuit to the display board. The signals that connect the colons, as well as a ground safety signal (connSense) are also sent to the display board. The high voltage rail will only be applied to the tubes if the microcontroller senses that all of the metal hardware that the enclosure is contrsucted with is electrically grounded. This prevents the clock from being operated with the circuitry inside exposed since the PIC will only sense ground with all enclosure hardware installed.

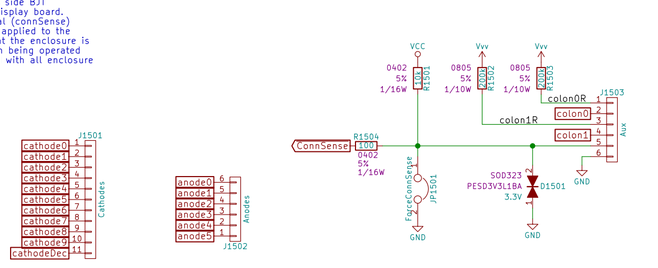

Other

Power:
- Input Voltage: 22VDC Minimum, 24VDC Nominal, 26VDC Maximum
- Input Current: 1A Maximum
- VVV Vacuum Supply Voltage: 180VDC Nominal
- VVV Switching Frequency: 800kHz
- VVV Supply Current: 30mA Maximum
- VCC/VDD Supply Voltage: 3.3VDC
- VCC/VDD Switching Frequency: 2.2MHz
- VCC/VDD Supply Current: 300mA Maximum

Nixie Tubes:
- Six 13-pin IN-14 Russian Gas Discharge Indicators, dated 1950 to 1990
- Display Refresh Rate: 60Hz
- Multiplexing Period: 3ms per Tube
- Multiplexing Blank Time: 200uS per Tube
- Comma on Most Significant Hour Digit used for 12 Hour PM indication
- Tube Strike Voltage: 170V
- Tube Sustain Voltage: 90V
- Viewing Angle: 30°
- Brightness: 100 cd/sqm
- Pulsed Tube Current: 3mA

Microcontroller:
- Microchip PIC16LF1519-I/MV
- 16384 Words of Program Memory
- 1024 Bytes of Data SRAM
- 148 Data SRAM Bytes Used
- 14% and 21% Utilization of Program and Data Memory Capacity, respectively
- 4913 Lines of C Code
- Compiled to 3450 words of PIC Assembly Instructions with XC8 compiler
- 34 of 36 I/O Pins Utilized
- 40 pin UQFN Package
- 3 of 3 Hardware Timers Used for Multiplexing and Timekeeping
- Standby Quiscent Current of 30nA
- Operating Frequency of 20MHz
- 5 Million Instructions per Second
- Programmed via PICKIT3 by MPLAB X IDE
- Time kept via 32.768kHz external CMOS oscillator and Internal Hardware Timer

4 layer Control PCB:
- 783 Pads
- 225 Vias
- 1671 Track Segments
- 208 Nets
- 575 Connections
- Electroless Nickel Immersion Gold Copper Plating
- 2 oz Copper Thickness
- 5cm x 20cm Board Size
- Solder Mask Defined Pads
- Parts on Top Copper Only
- Soldered using Solder Paste, Stainless Steel Stencil and Reflow Oven

Bill of Materials:
- 268 Parts
- 16 Integrated Circuits
- 1 Crystal Resonator
- 129 Resistors
- 30 Discrete Transistors
- 3 Inductors
- 13 Diodes
- 58 Capacitors
- BOM Price of $160 Without tubes, PCBs, or Enclosure

Overall Construction:
- Two Stacked PCBs with 0.1" Header Completing Connections
- Nickel Plated Standoffs Holding PCBs Together 1 Inch Apart
- 3/8" Nickel Plated Standoffs Securing Boards Together
- Encased in a Four Piece Wood Enclosure
- Top and Bottom Encased with Acrylic Plates and #4-40 Machine Screws

Circuit design began in April of 2016. Originally an Arduino Clone would have been used as the microcontroller, but I wanted to be proud of the project in the future, knowing I hadn't taken the easy road, so I chose a PIC. I settled on only using power supply components from Linear Technology since price wasn't really an issue, and they work really well. I had originally wanted to use a real time clock in order to keep time external to the PIC but decided to keep time internally instead since it would simplify the design and code. This made a backup power supply necessary. Schematics were finished in April of 2017 and PCBs were ordered by August of 2017. Through a month long debug process, a lot of issues were resolved and every feature I had originally wanted on the clock now works like I wanted it. The enclosure was designed in Septemeber of 2017 and custom acrylic panels were designed and ordered from a company in San Francisco to keep everything looking good. The wood enclosure was put together by Brian Schroeder. Different color stain/acrylic options are available to change up the look of the outside of the clock. I considered the original design for the clock finished in October of 2017. In the future I'd like to design other display PCBs to house different types of Nixie tubes, like the IN-18 or the IN-12. Using a single control board design and PIC firmware, the clock can be built with virtually any type of common anode Nixie tube. As long as I've been designing electronics I've wanted to build a clock like this, since I think it's an awesome combination of retro technology with modern microelectronic control circuitry. On the outside, the clock looks like it could have been built in the 1970's, but under the hood, everything is modern and cutting edge, in terms of power electronics and microcontrollers. Hopefully the multiplexing display scheme will keep these Nixie tubes from dying out as long as possible since the tubes age and eventually will not illuminate anymore. Nixie tubes have not been manufactured en masse since around the 1980's, so this clock will show them off while they still last.

Drew Maatman

Sheet: /
File: Nixie Clock.sch

Title: Nixie Clock Schematic Poster

Size: User	Date: 2017-10-08	Rev: 2
KiCad E.D.A. kicad 4.0.7		Id: 1/1