Thermal Camera

https://github.com/drewsum/Thermal_Camera

01. Table of Contents

02. POS12 Input — POS12_Input

03. POS12 Telemetry — POS12 Telemetry

04. POS3P0 Power Supply — POS3P0 Power Supply

05. POS3P0 Telemetry — POS3P0 Telemetry

06. POS1P8 Power Supply — POS1P8 Power Supply

07. POS1P8 Telemetry — POS1P8 Telemetry

08. POS2P8 Power Supply — POS2P8 Power Supply

09. POS2P8 Telemetry — POS2P8 Telemetry

10. POS1P2 Power Supply — POS1P2 Power Supply

11. POS1P2 Telemetry — POS1P2 Telemetry

12. LCD Backlight Power Supply — LCD Backlight Power Supply

13. LCD Backlight Telemetry — LCD Backlight Telemetry

14. Battery Management — Battery Management

15. PIC32MZ DA Programming — PIC32MZ DA Programming

16. PIC32MZ DA Clocking — PIC32MZ DA Clocking

17. PIC32MZ DA Power — PIC32MZ DA Power

18. PIC32MZ DA 1 — PIC32MZ DA 1

19. PIC32MZ DA 2 — PIC32MZ DA 2

20. External Storage — External Storage

21. Graphic LCD — Graphic LCD

22. USB UART — USB UART

23. Elapsed Time Counter — Elapsed Time Counter

24. FLIR Lepton Sensor — FLIR Lepton Sensor

25. USB Hub — USB Hub

26. Upstream USB Port — Upstream USB Port (File: Upstream_USB_Port.kicad_sch)

27. PGOOD LEDs — PGOOD LEDs

28. Status LEDs — Status LEDs

29. Mechanical — Mechanical

Drew Maatman and Michael Laffin

Sheet: /
File: Thermal_Camera.kicad_sch

Title: Thermal Camera

Size: A	Date: 2023-12-07	Rev: PRELIM
KiCad E.D.A. kicad 7.0.1		Id: 1/29

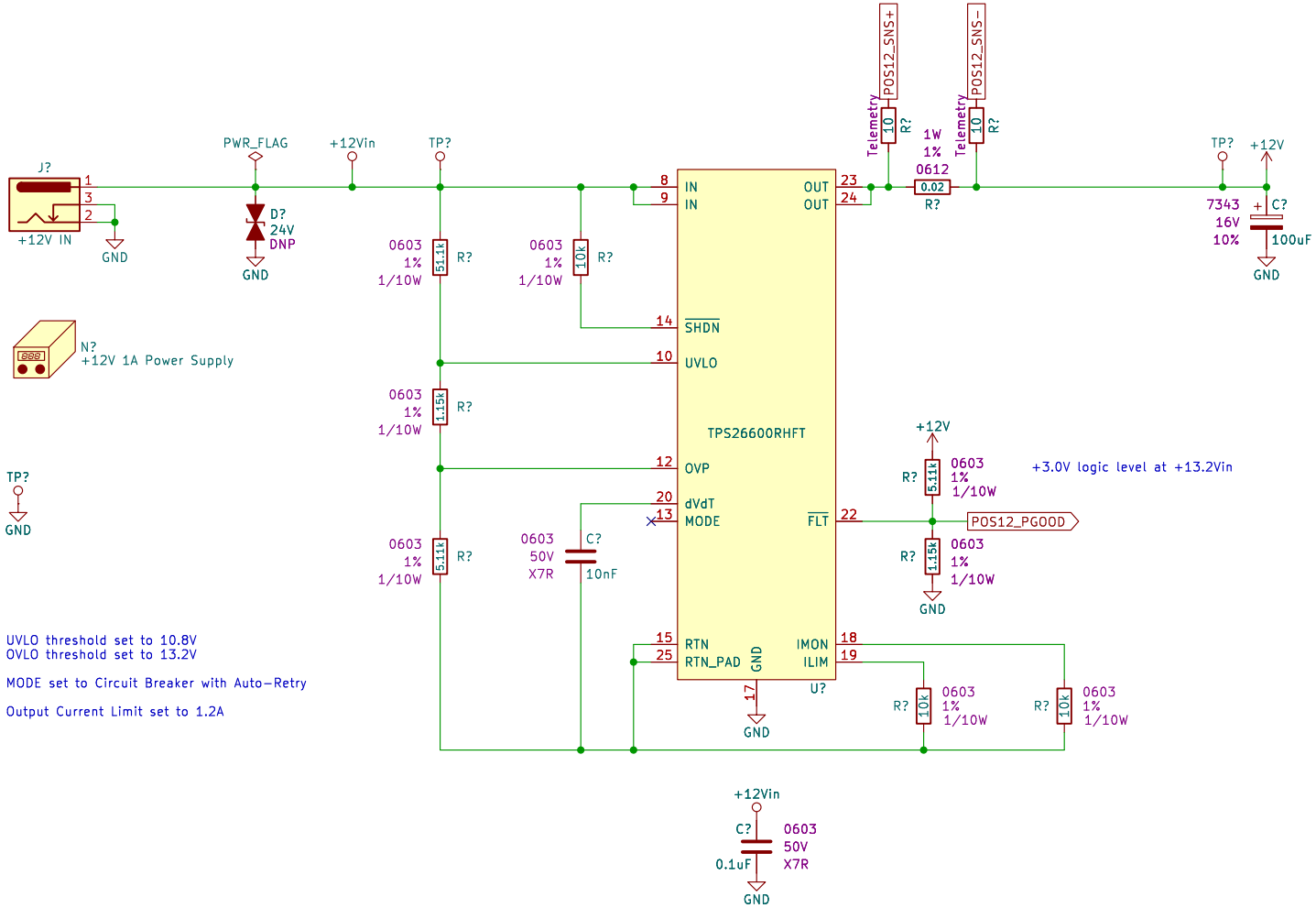

Drew Maatman and Michael Laffin

Sheet: /POS12_Input/
File: POS12_Input.kicad_sch

Title: Thermal Camera

Size: A	Date: 2023−12−07	**Rev: PRELIM**
KiCad E.D.A. kicad 7.0.1		Id: 2/29

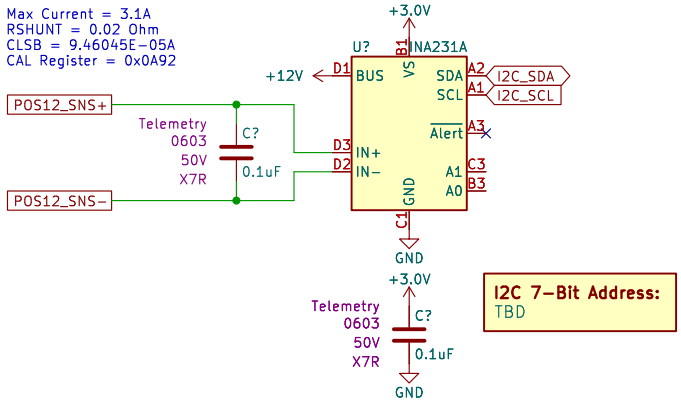

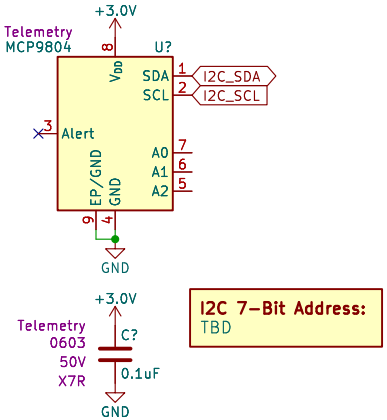

Drew Maatman and Michael Laffin

Sheet: /POS12 Telemetry/
File: POS12_Telemetry.kicad_sch

Title: Thermal Camera

Size: A	Date: 2023-12-07	**Rev: PRELIM**
KiCad E.D.A. kicad 7.0.1		Id: 3/29

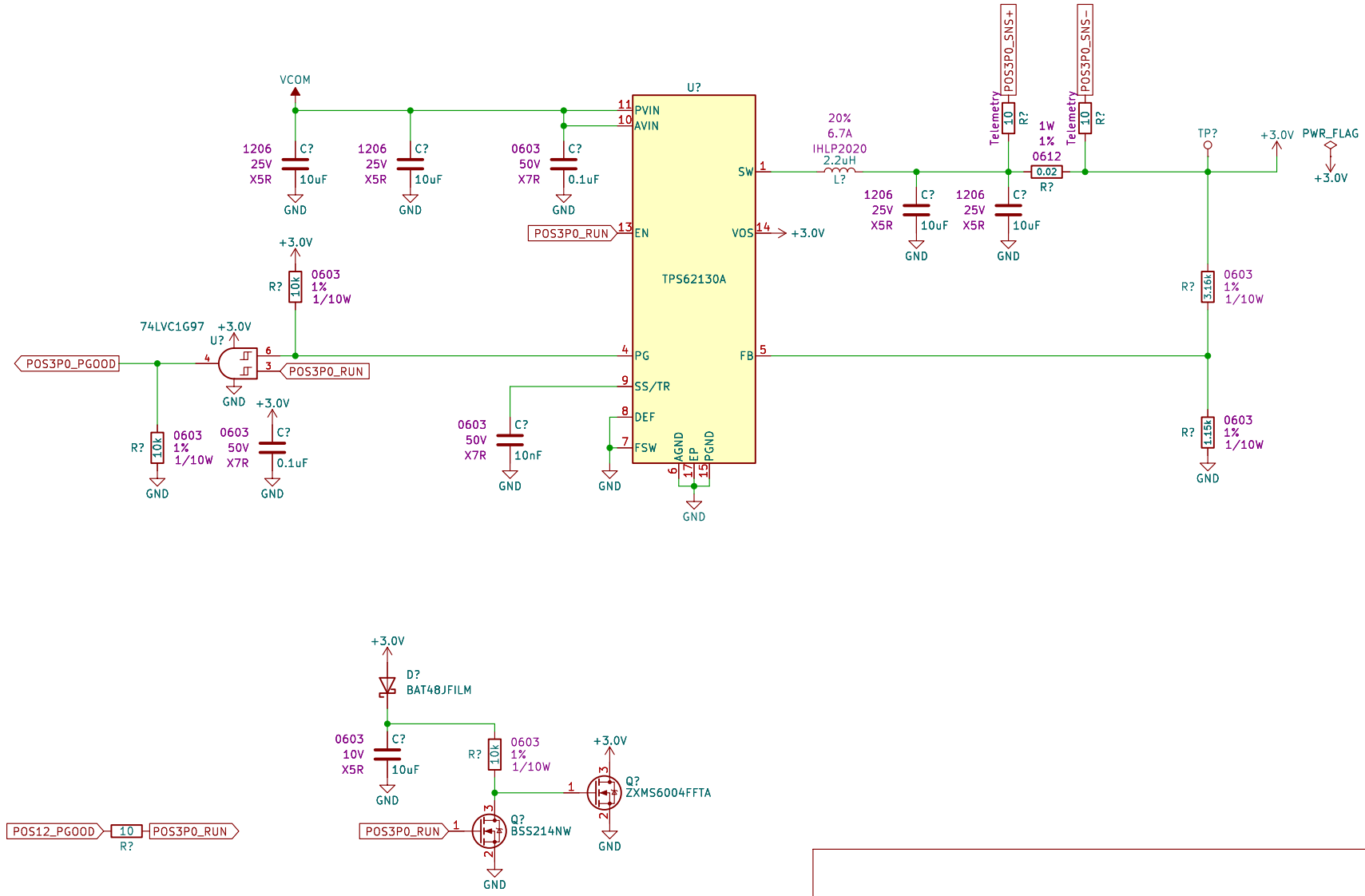

Drew Maatman and Michael Laffin

Sheet: /POS3P0 Power Supply/

File: POS3P0_Power_Supply.kicad_sch

Title: Thermal Camera

Size: A	Date: 2023-12-07	Rev: PRELIM
KiCad E.D.A. kicad 7.0.1		Id: 4/29

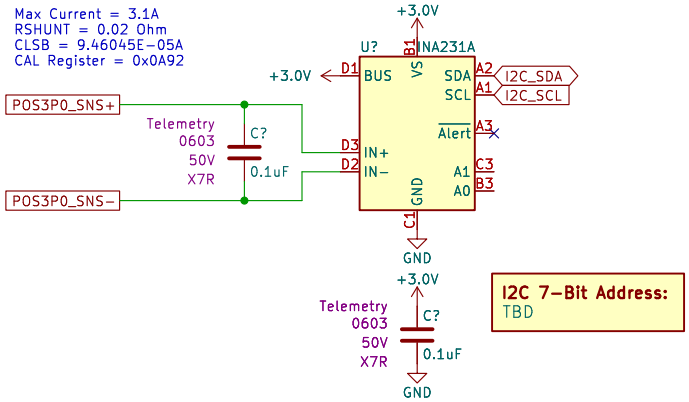

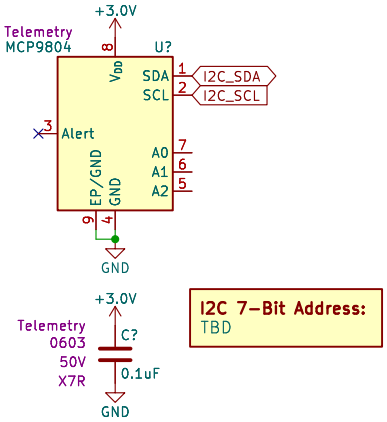

Drew Maatman and Michael Laffin

Sheet: /POS3P0 Telemetry/
File: POS3P0_Telemetry.kicad_sch

Title: Thermal Camera

Size: A	Date: 2023-12-07	**Rev: PRELIM**
KiCad E.D.A. kicad 7.0.1		Id: 5/29

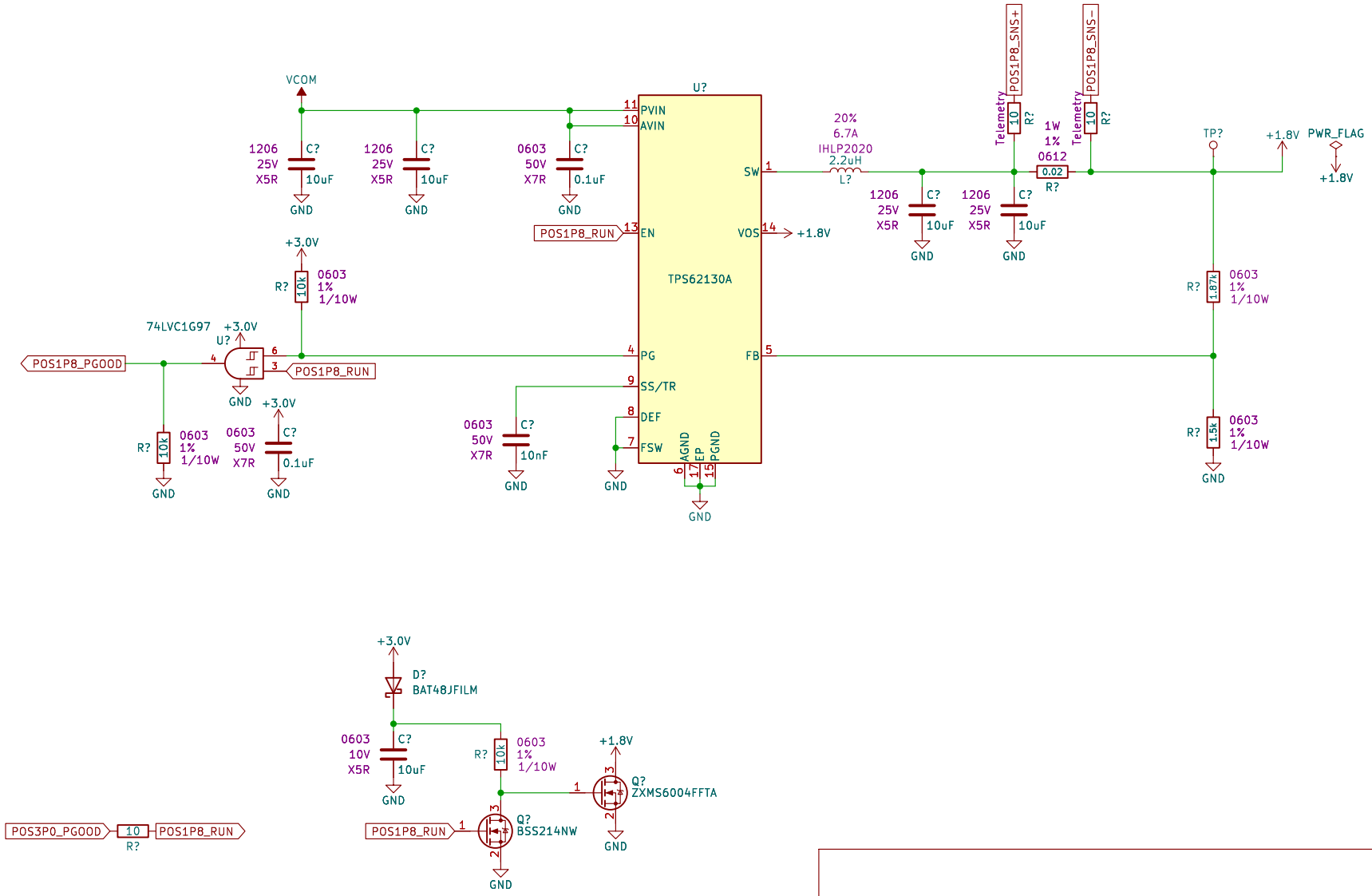

Drew Maatman and Michael Laffin

Sheet: /POS1P8 Power Supply/

File: POS1P8_Power_Supply.kicad_sch

Title: Thermal Camera

Size: A	Date: 2023-12-07	**Rev: PRELIM**
KiCad E.D.A. kicad 7.0.1		Id: 6/29

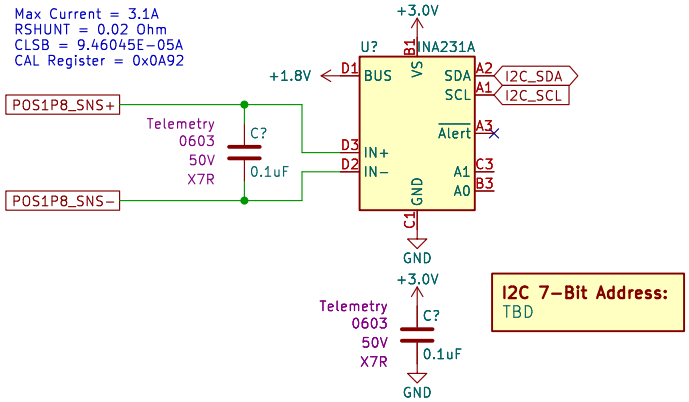

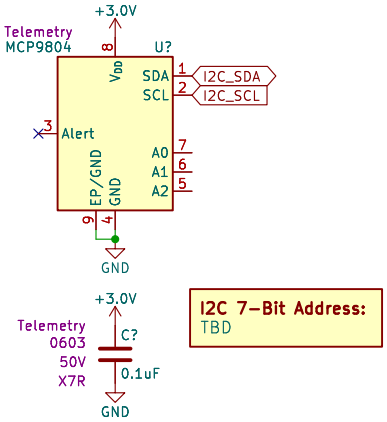

Drew Maatman and Michael Laffin

Sheet: /POS1P8 Telemetry/
File: POS1P8_Telemetry.kicad_sch

Title: Thermal Camera

Size: A	Date: 2023-12-07	**Rev: PRELIM**
KiCad E.D.A. kicad 7.0.1		Id: 7/29

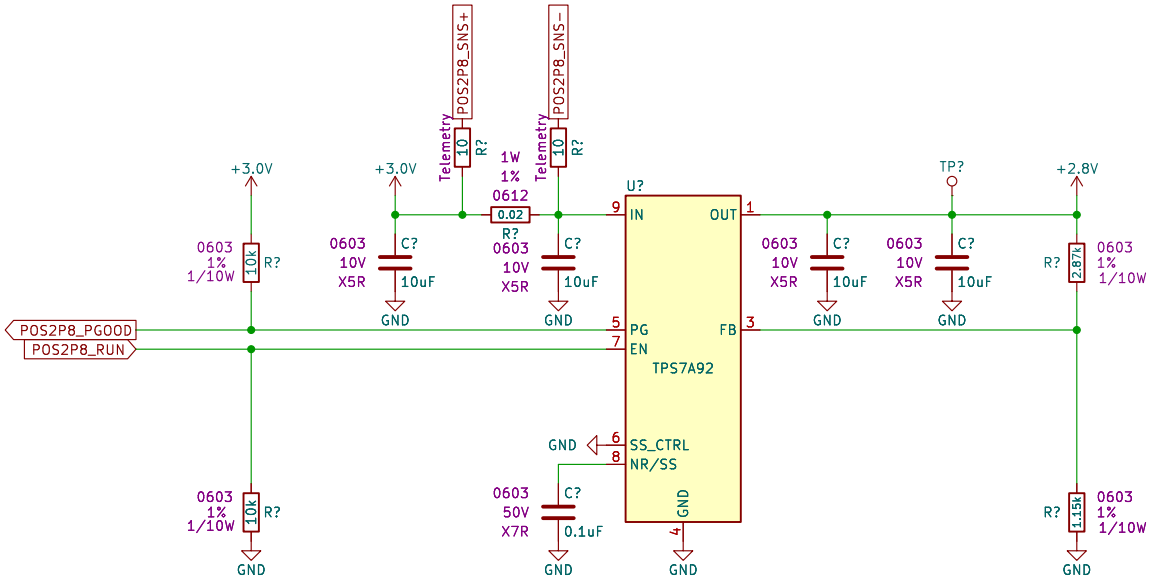

Drew Maatman and Michael Laffin

Sheet: /POS2P8 Power Supply/

File: POS2P8_Power_Supply.kicad_sch

Title: Thermal Camera

Size: A	Date: 2023-12-07	Rev: PRELIM
KiCad E.D.A. kicad 7.0.1		Id: 8/29

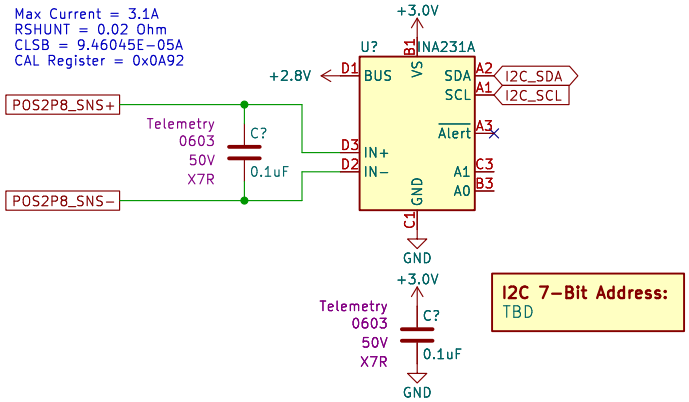

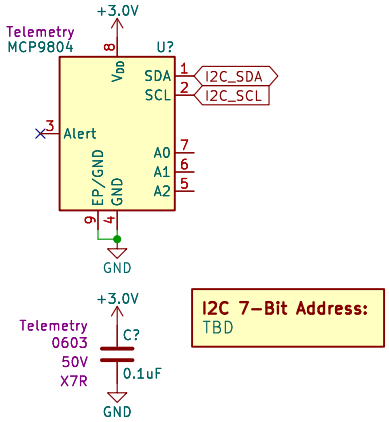

Drew Maatman and Michael Laffin

Sheet: /POS2P8 Telemetry/
File: POS2P8_Telemetry.kicad_sch

Title: Thermal Camera

Size: A	Date: 2023-12-07	**Rev: PRELIM**
KiCad E.D.A. kicad 7.0.1		Id: 9/29

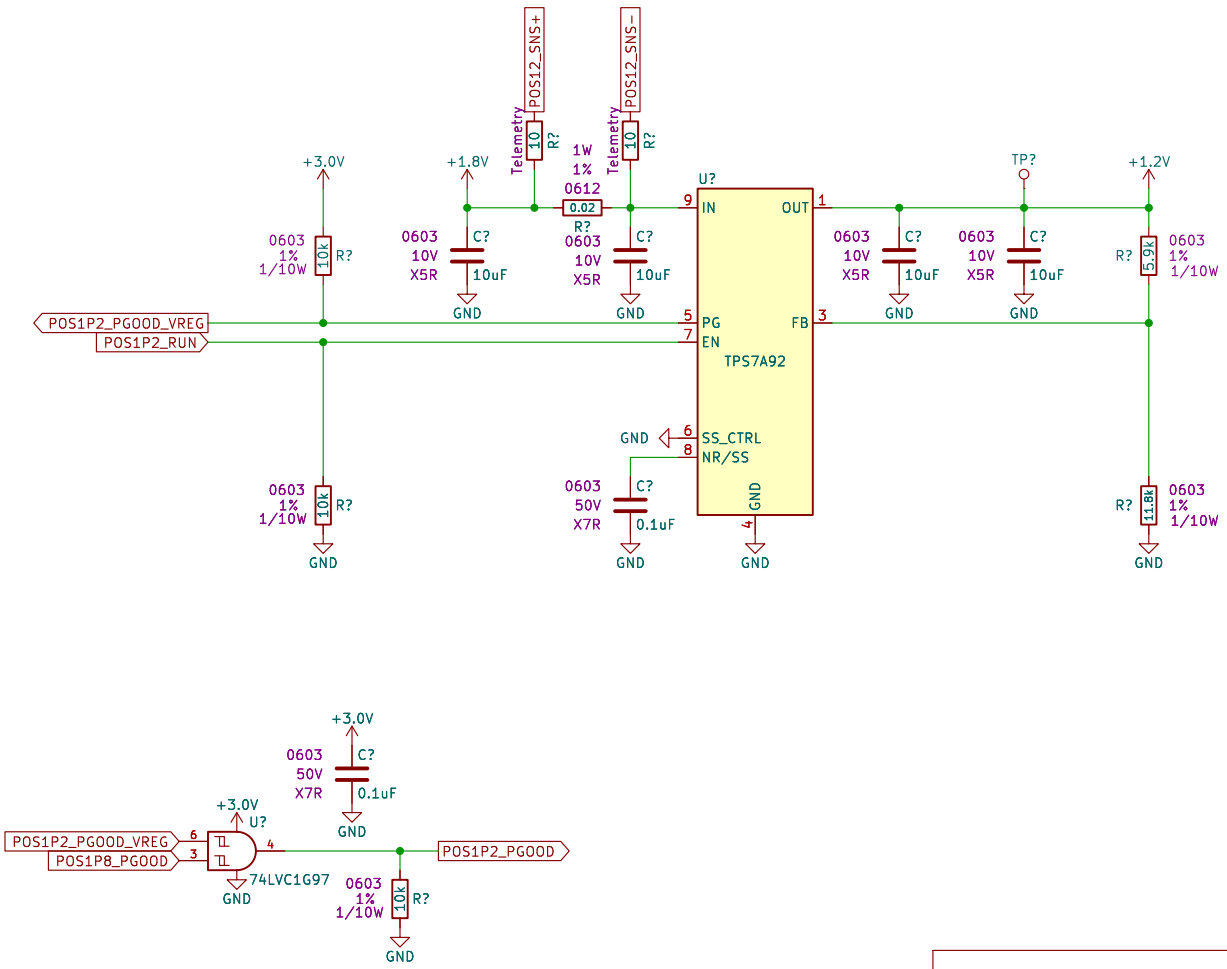

Drew Maatman and Michael Laffin

Sheet: /POS1P2 Power Supply/
File: POS1P2_Power_Supply.kicad_sch

Title: Thermal Camera

Size: A	Date: 2023-12-07	**Rev: PRELIM**
KiCad E.D.A. kicad 7.0.1		Id: 10/29

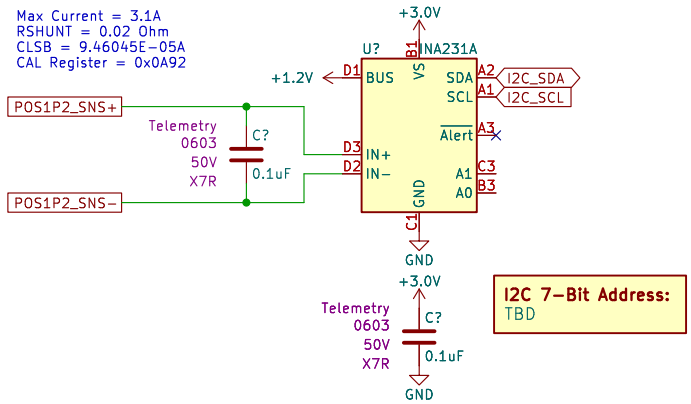

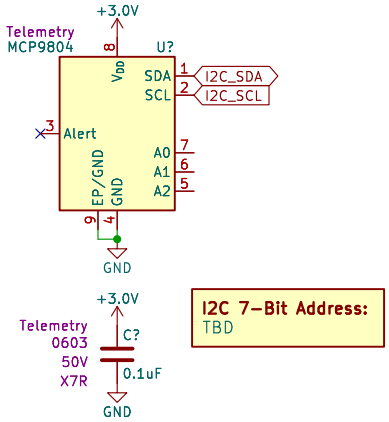

Drew Maatman and Michael Laffin

Sheet: /POS1P2 Telemetry/
File: POS1P2_Telemetry.kicad_sch

Title: Thermal Camera

Size: A	Date: 2023-12-07	**Rev: PRELIM**
KiCad E.D.A. kicad 7.0.1		Id: 11/29

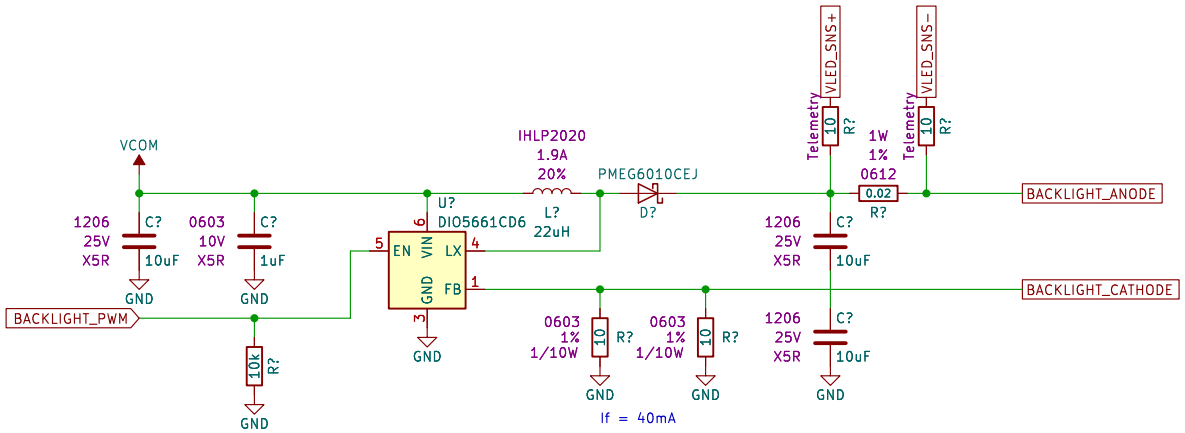

Drew Maatman and Michael Laffin

Sheet: /LCD Backlight Power Supply/

File: LCD_Backlight_Power_Supply.kicad_sch

Title: Thermal Camera

Size: A	Date: 2023-12-07	**Rev: PRELIM**
KiCad E.D.A. kicad 7.0.1		Id: 12/29

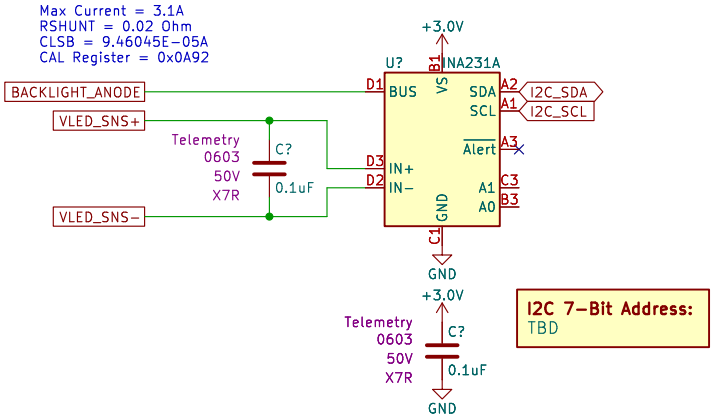

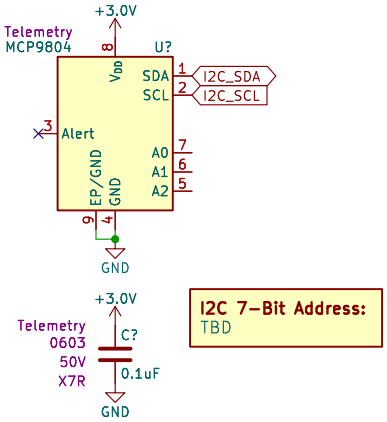

Drew Maatman and Michael Laffin

Sheet: /LCD Backlight Telemetry/
File: LCD_Backlight_Telemetry.kicad_sch

Title: Thermal Camera

Size: A	Date: 2023-12-07	**Rev: PRELIM**
KiCad E.D.A. kicad 7.0.1		Id: 13/29

Determine specific version of each chip to use

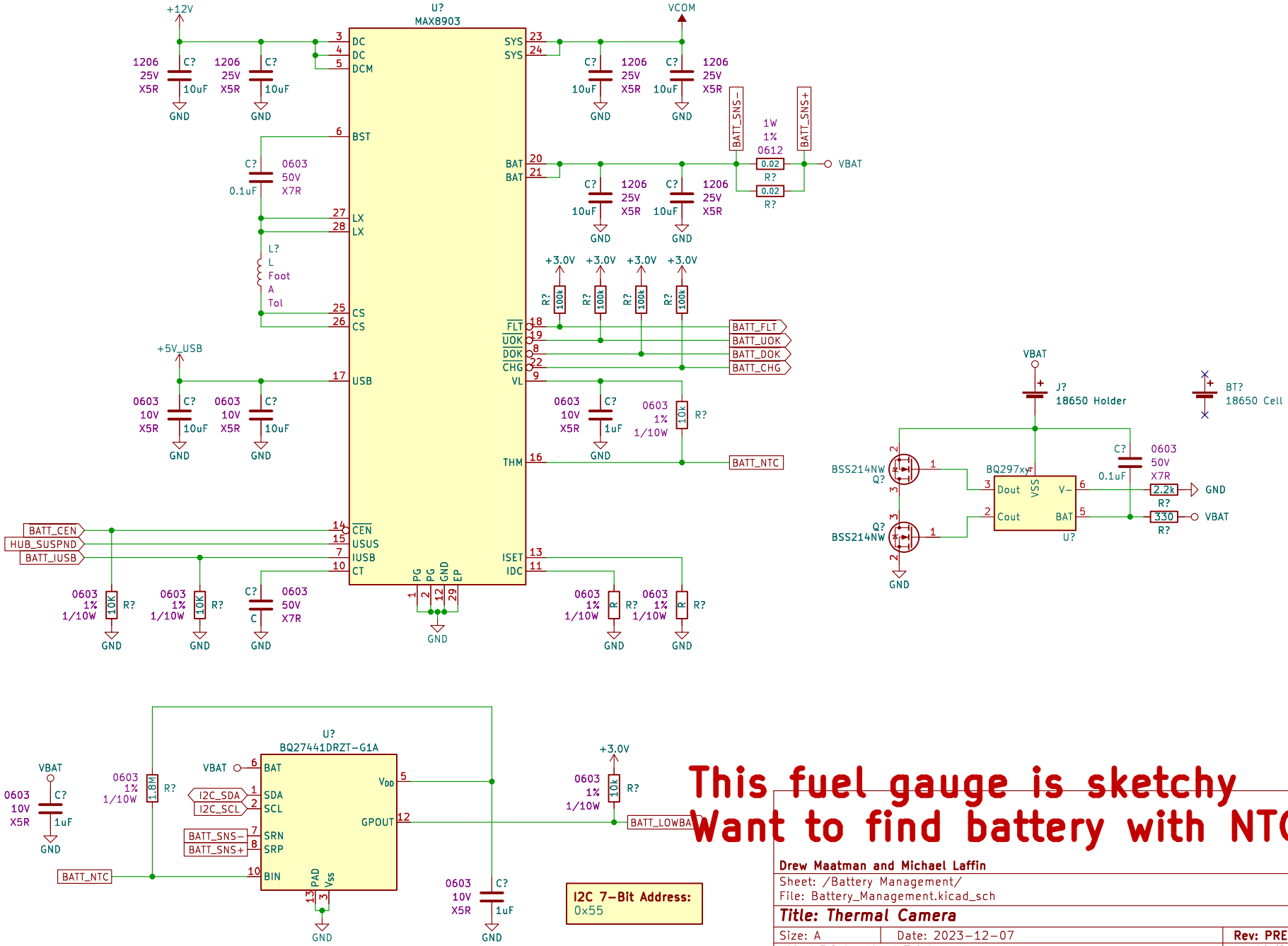

This fuel gauge is sketchy
Want to find battery with NTC

Drew Maatman and Michael Laffin

Sheet: /Battery Management/
File: Battery_Management.kicad_sch

Title: Thermal Camera

Size: A	Date: 2023-12-07	Rev: PRELIM
KiCad E.D.A. kicad 7.0.1		Id: 14/29

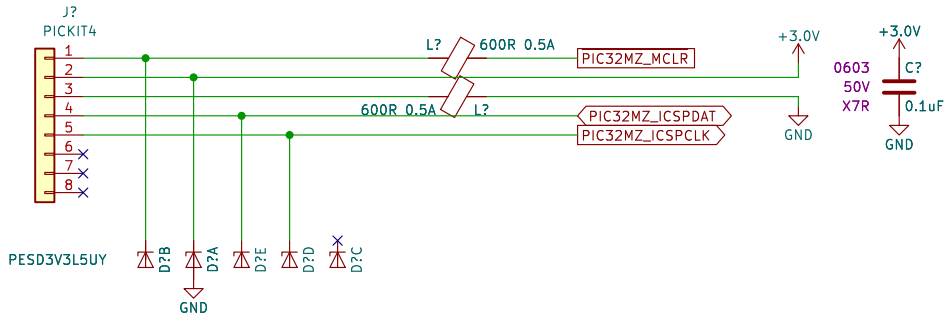

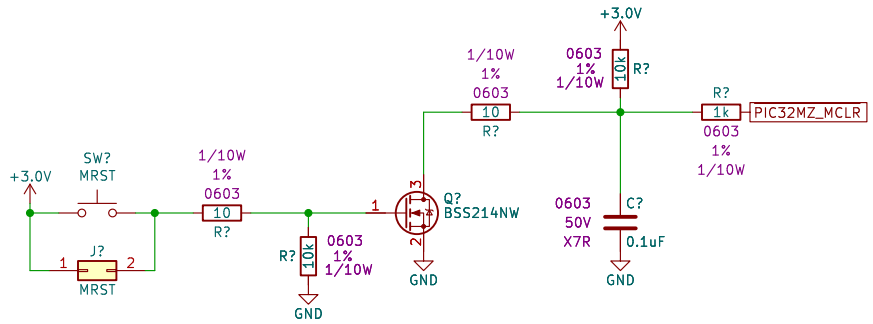

Drew Maatman and Michael Laffin

Sheet: /PIC32MZ DA Programming/

File: PIC32MZ_DA_Programming.kicad_sch

Title: Thermal Camera

Size: A	Date: 2023-12-07	**Rev: PRELIM**
KiCad E.D.A. kicad 7.0.1		Id: 15/29

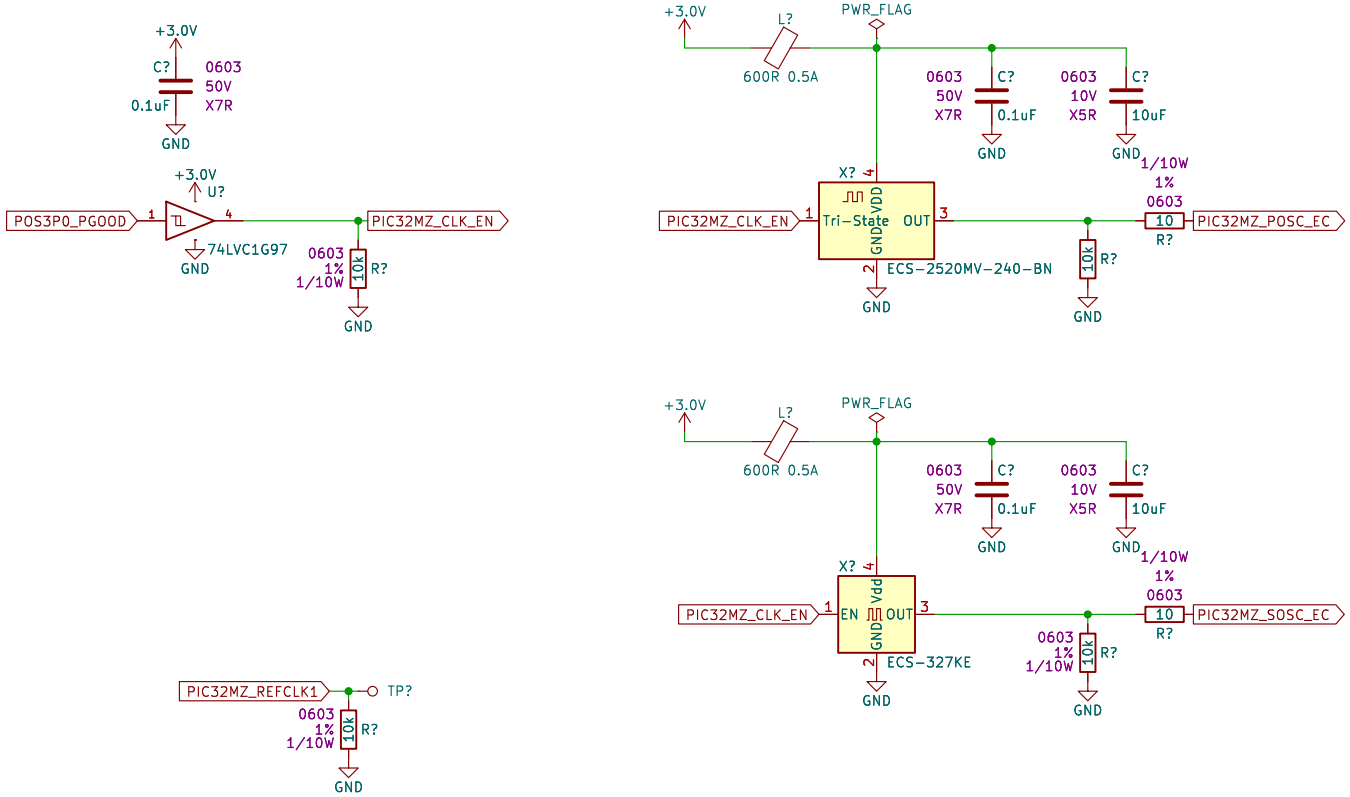

Drew Maatman and Michael Laffin

Sheet: /PIC32MZ DA Clocking/

File: PIC32MZ_DA_Clocking.kicad_sch

Title: Thermal Camera

Size: A	Date: 2023-12-07	**Rev: PRELIM**
KiCad E.D.A. kicad 7.0.1		Id: 16/29

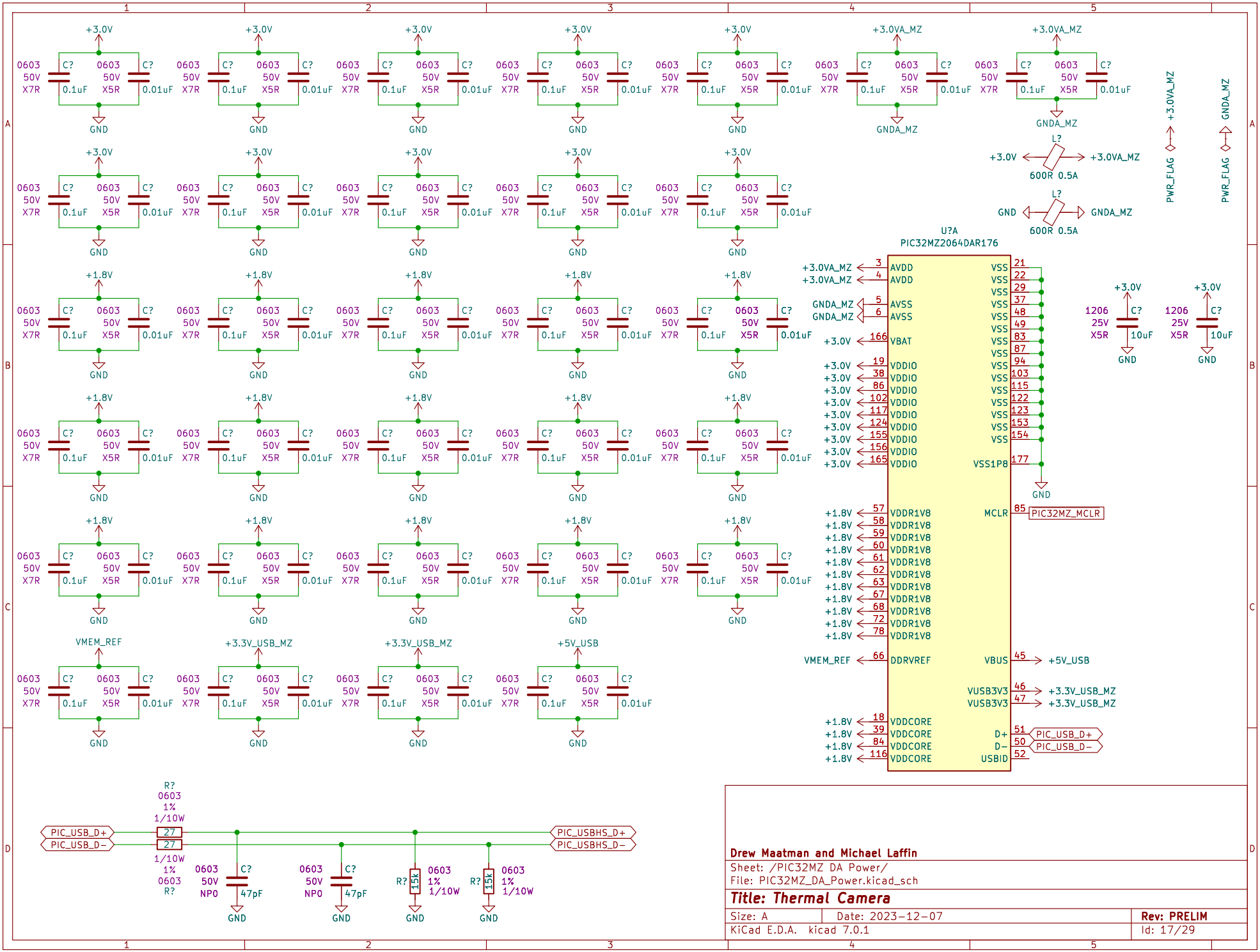
U?A
PIC32MZ2064DAR176
AVDD
AVSS
VBAT
VDDIO
VDDR1V8
DDRVREF
VDDCORE
VSS
VSS1P8
MCLR
VBUS
VUSB3V3
D+
D−
USBID
PIC32MZ_MCLR
PIC_USB_D+
PIC_USB_D−
+5V_USB
+3.3V_USB_MZ
VMEM_REF
+3.0V
+3.0VA_MZ
GNDA_MZ
+1.8V
GND
PWR_FLAG
L?
600R 0.5A
R?
27
15k
1/10W
1%
0603
C?
50V
NPO
47pF
PIC_USBHS_D+
PIC_USBHS_D−
Drew Maatman and Michael Laffin
Sheet: /PIC32MZ DA Power/
File: PIC32MZ_DA_Power.kicad_sch
Title: Thermal Camera
Size: A
Date: 2023-12-07
Rev: PRELIM
KiCad E.D.A. kicad 7.0.1
Id: 17/29

See TABLE 36-1:RGB COLOR MAPPING for Graphic LCD Pin Mapping

DOUBLE CHECK SOSC PIN

U?B
PIC32MZ2064DAR176

Net	Pin	Function
SDCD	53	TMS/SDCD/RA0
	160	TCK/AN24/RA1
	129	SCL2/RA2
	128	EBIRDY1/SDA2/RA3
GLCD_R1	127	GD1/EBID14/PMD14/RA4
	174	EBIA5/AN7/PMA5/RA5
SDCK	54	TRCLK/SDCK/SQICLK/RA6
SDDATA3	55	TRD3/SDDATA3/SQID3/RA7
	1	VREF-/CVREF-/AN27/RA9
	2	VREF+/CVREF+/AN28/RA10
SCL1	126	RPA14/SCL1/RA14
SDA1	125	RPA15/SDA1/RA15
PGED1	168	PGED1/AN0/RPB0/CTED2/RB0
PDEC1	11	PGEC1/AN9/RPB1/CTED1/RB1
	172	AN1/C2INB/RPB2/RB2
	8	AN8/RPB3/RB3
	175	AN2/C1INB/RB4
	167	AN45/RPB5/RB5
	13	PGEC2/RPB6/RB6
GPIO	170	PGED2/C1INA/AN46/RPB7/RB7
	10	EBID10/AN4/RPB8/PMD10/RB8
SDO3	173	EBIA7/AN47/HLVDIN/RPB9/PMA7/RB9
SDI3	168	AN5/RPB10/RB10
	12	AN49/RB11
GPIO	171	AN6/RB12
	9	AN48/CTPLS/RB13
SCK3	159	AN29/SCK3/RB14
	7	AN3/C2INA/RPB15/OCFB/RB15
	17	EBID5/AN12/RPC1/PMD5/RC1
	14	EBID12/AN10/RPC2/PMD12/RC2
	15	EBIWE/AN34/RPC3/PMWR/RC3
	16	EBIOE/AN19/RPC4/PMRD/RC4
POSC	164	OSC1/CLKI/RC12
	162	SOSCI/RPC13/RC13
SOSC	161	SOSCO/RPC14/T1CK/RC14
	163	OSC2/CLKO/RC15
	79	RTCC/RPD0/RD0
	73	SCK1/RD1
GLCD_G2	74	GD10/EBIA14/RPD2/PMA14/PMCS1/RD2
GLCD_G3	75	GD11/EBIA15/RPD3/PMA15/PMCS2/RD3
SDCMD	70	SDCMD/SQICS0/RPD4/RD4
	71	SQICS1/RPD5/RD5
	121	ETXEN/RPD6/RD6
	120	ETXCLK/RPD7/RD7
GLCD_R2	76	GD2/EBID15/RPD9/PMD15/RD9
	77	SCK4/RD10
	119	EMDC/RPD11/RD11
GLCD_R7	80	GD7/EBIA12/RPD12/PMA12/RD12
GLCD_B6	81	GD22/EBIA13/PMA13/RD13
	158	AN22/RPD14/RD14
	157	AN33/SCK6/RD15
	40	EBID0/PMD0/RE0
	36	EBID1/AN39/PMD1/RE1
	99	EBID2/PMD2/RE2
	98	EBID3/RPE3/PMD3/RE3
	43	EBID4/AN18/PMD4/RE4
	69	EBIA6/RPE5/PMA6/RE5
	23	EBID6/AN16/PMD6/RE6
	24	EBID7/AN15/PMD7/RE7
	25	AN25/RPE8/RE8
	26	AN26/RPE9/RE9

SDHC_SDCD
GLCD_R1
SDHC_SDCK
SDHC_SDDATA3
I2C_SCL
I2C_SDA
PIC32MZ_ICSPDAT
PIC32MZ_ICSPCLK
FLASH_SPI_CS
FLASH_SPI_MOSI
FLASH_SPI_MISO
FLASH_SPI_WP
FLASH_SPI_SCK
PIC32MZ_POSC_EC
PIC32MZ_SOSC_EC
GLCD_G2
GLCD_G3
SDHC_SDCMD
GLCD_R2
GLCD_R7
GLCD_B6

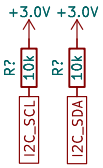

Drew Maatman and Michael Laffin

Sheet: /PIC32MZ DA 1/
File: PIC32MZ_DA_1.kicad_sch

Title: Thermal Camera

Size: A	Date: 2023-12-07	**Rev: PRELIM**
KiCad E.D.A. kicad 7.0.1		Id: 18/29

See TABLE 36-1:RGB COLOR MAPPING for Graphic LCD Pin Mapping

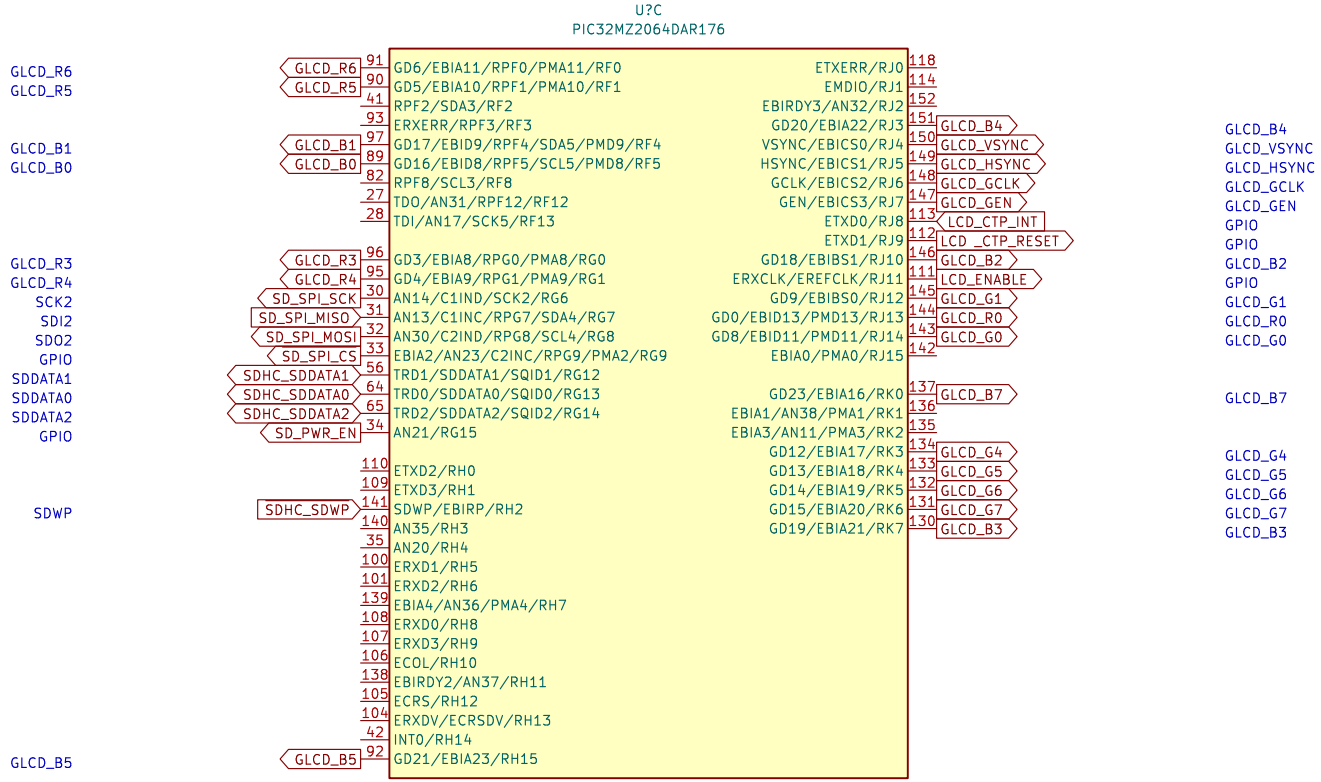

Drew Maatman and Michael Laffin

Sheet: /PIC32MZ DA 2/
File: PIC32MZ_DA_2.kicad_sch

Title: Thermal Camera

Size: A	Date: 2023-12-07	**Rev: PRELIM**
KiCad E.D.A. kicad 7.0.1		Id: 19/29

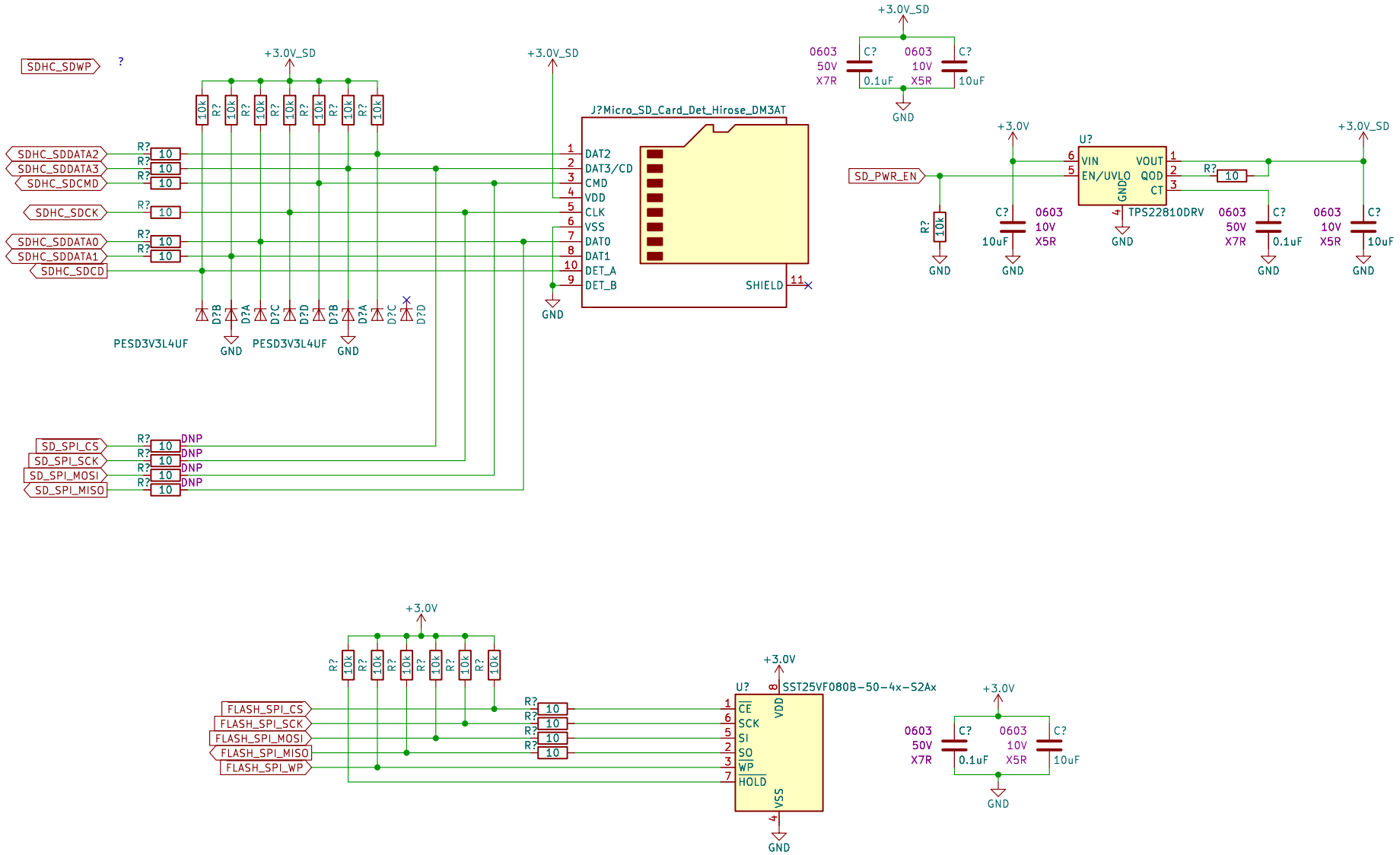

Drew Maatman and Michael Laffin

Sheet: /External Storage/

File: External_Storage.kicad_sch

Title: Thermal Camera

Size: A	Date: 2023-12-07	**Rev: PRELIM**
KiCad E.D.A. kicad 7.0.1		Id: 20/29

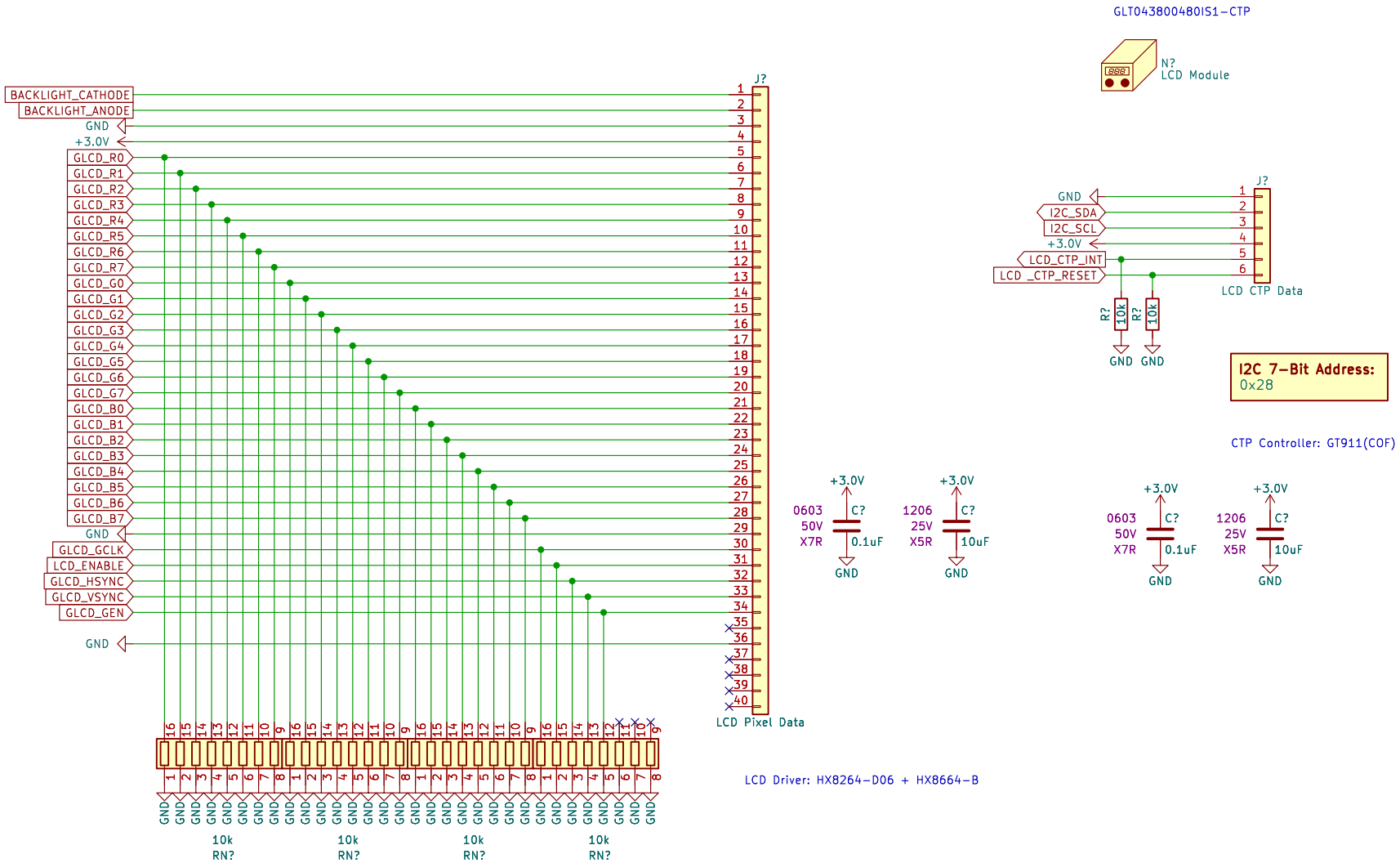

Drew Maatman and Michael Laffin

Sheet: /Graphic LCD/

File: Graphic_LCD.kicad_sch

Title: Thermal Camera

Size: A	Date: 2023-12-07	Rev: PRELIM
KiCad E.D.A. kicad 7.0.1		Id: 21/29

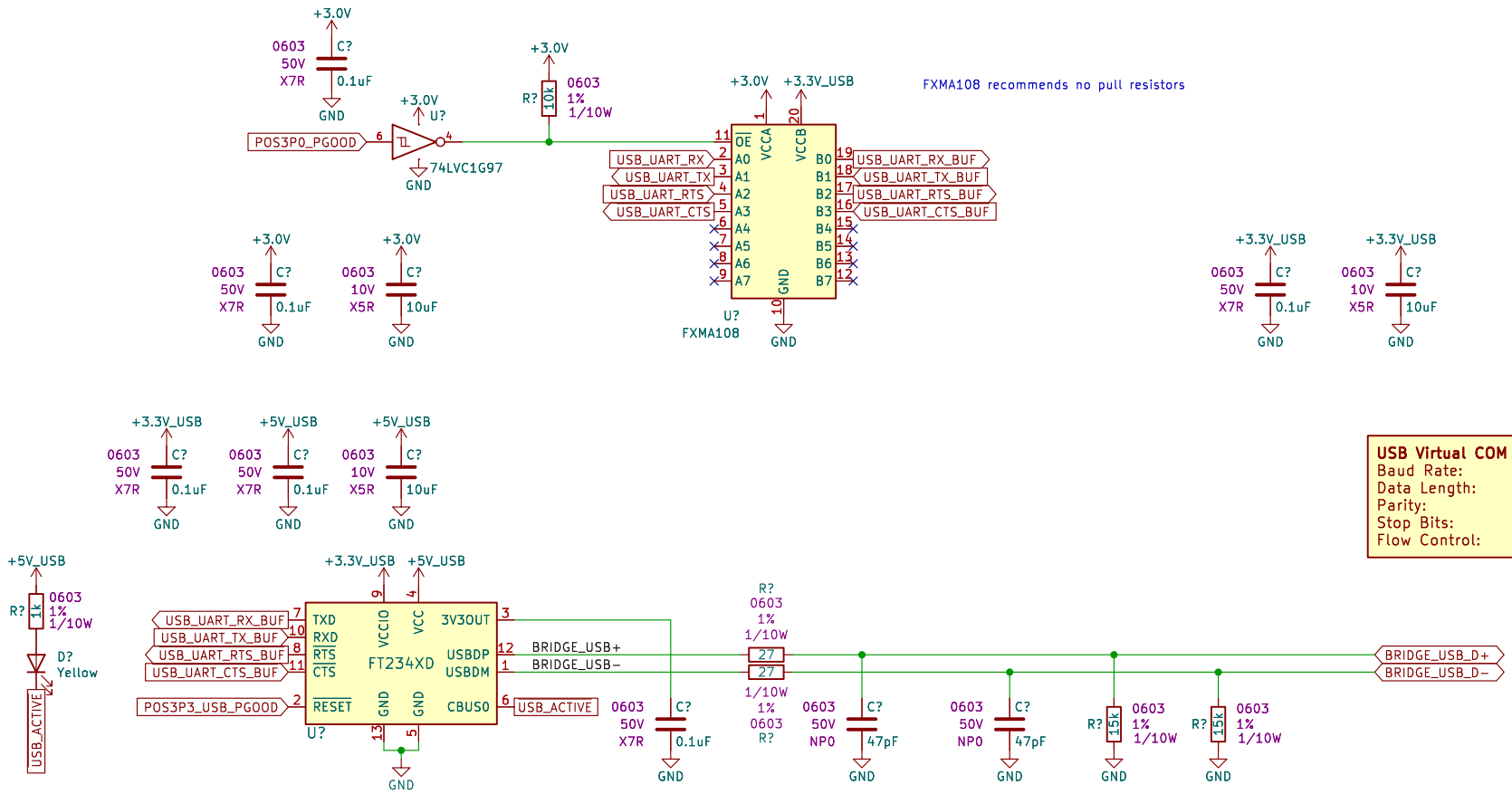

USB Virtual COM Port Settings:

Baud Rate:	115200 bps
Data Length:	8 bit
Parity:	None
Stop Bits:	1
Flow Control:	None

Drew Maatman and Michael Laffin

Sheet: /USB UART/
File: USB_UART.kicad_sch

Title: Thermal Camera

Size: A	Date: 2023-12-07	**Rev: PRELIM**
KiCad E.D.A. kicad 7.0.1		Id: 22/29

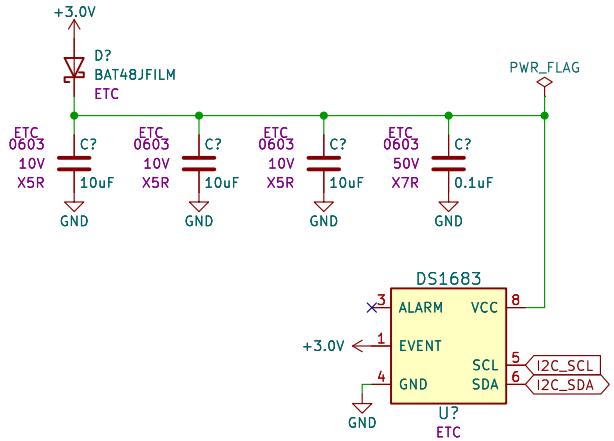

I2C 7-Bit Address:
0x6B

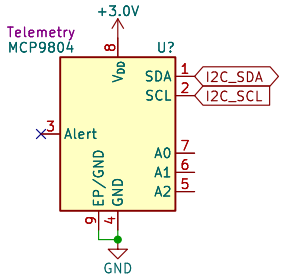

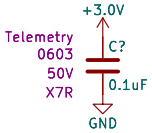

I2C 7-Bit Address:
TBD

Ambient, place away from power components

Drew Maatman and Michael Laffin

Sheet: /Elapsed Time Counter/
File: Elapsed_Time_Counter.kicad_sch

Title: Thermal Camera

Size: A	Date: 2023-12-07	**Rev: PRELIM**
KiCad E.D.A. kicad 7.0.1		Id: 23/29

Power Supply Considerations:
VDDC: 1.20V (1.14V min, 1.26V max), 50mVpp max ripple, 110mA max draw
VDD: 2.80V (2.72V min, 2.88V max), 30mVpp max ripple, 16mA max draw
VDDIO: 2.8V min, 3.1V max, 50mVpp max ripple, 310mA max draw

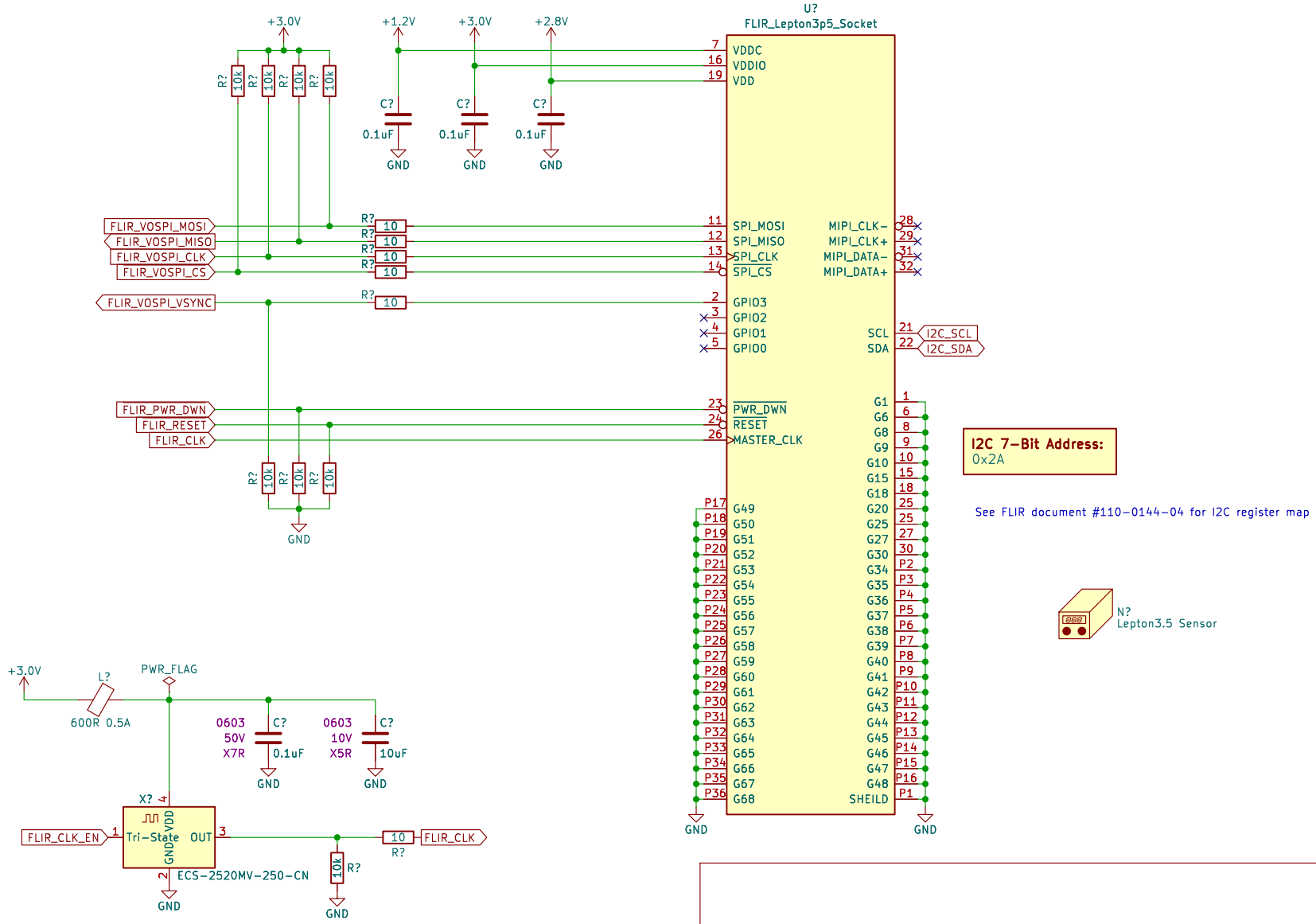

Drew Maatman and Michael Laffin

Sheet: /FLIR Lepton Sensor/
File: FLIR_Lepton_Sensor.kicad_sch

Title: Thermal Camera

Size: A	Date: 2023−12−07	**Rev: PRELIM**
KiCad E.D.A. kicad 7.0.1		Id: 24/29

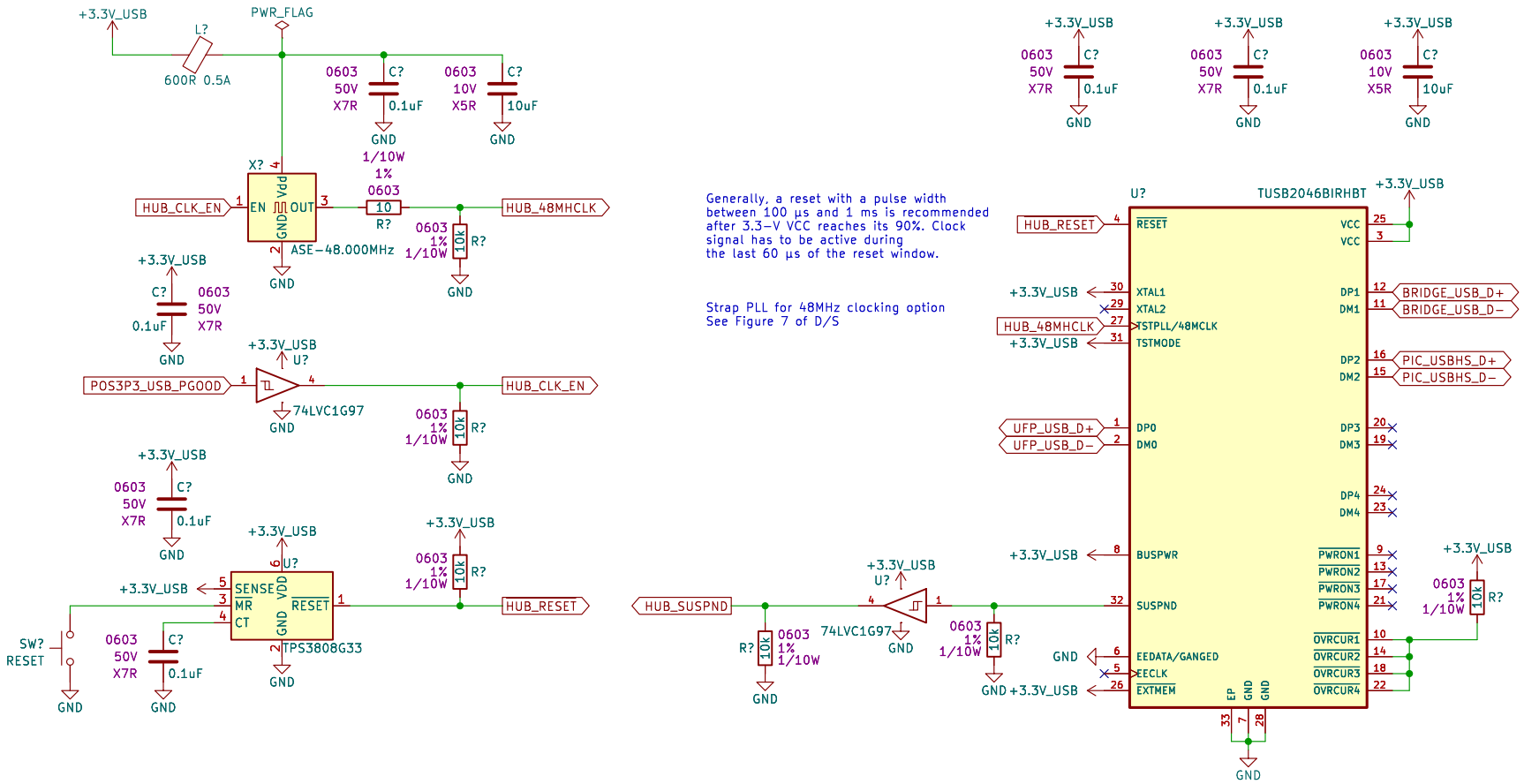

Drew Maatman and Michael Laffin

Sheet: /USB Hub/

File: USB_Hub.kicad_sch

Title: Thermal Camera

Size: A	Date: 2023-12-07	Rev: PRELIM
KiCad E.D.A. kicad 7.0.1		Id: 25/29

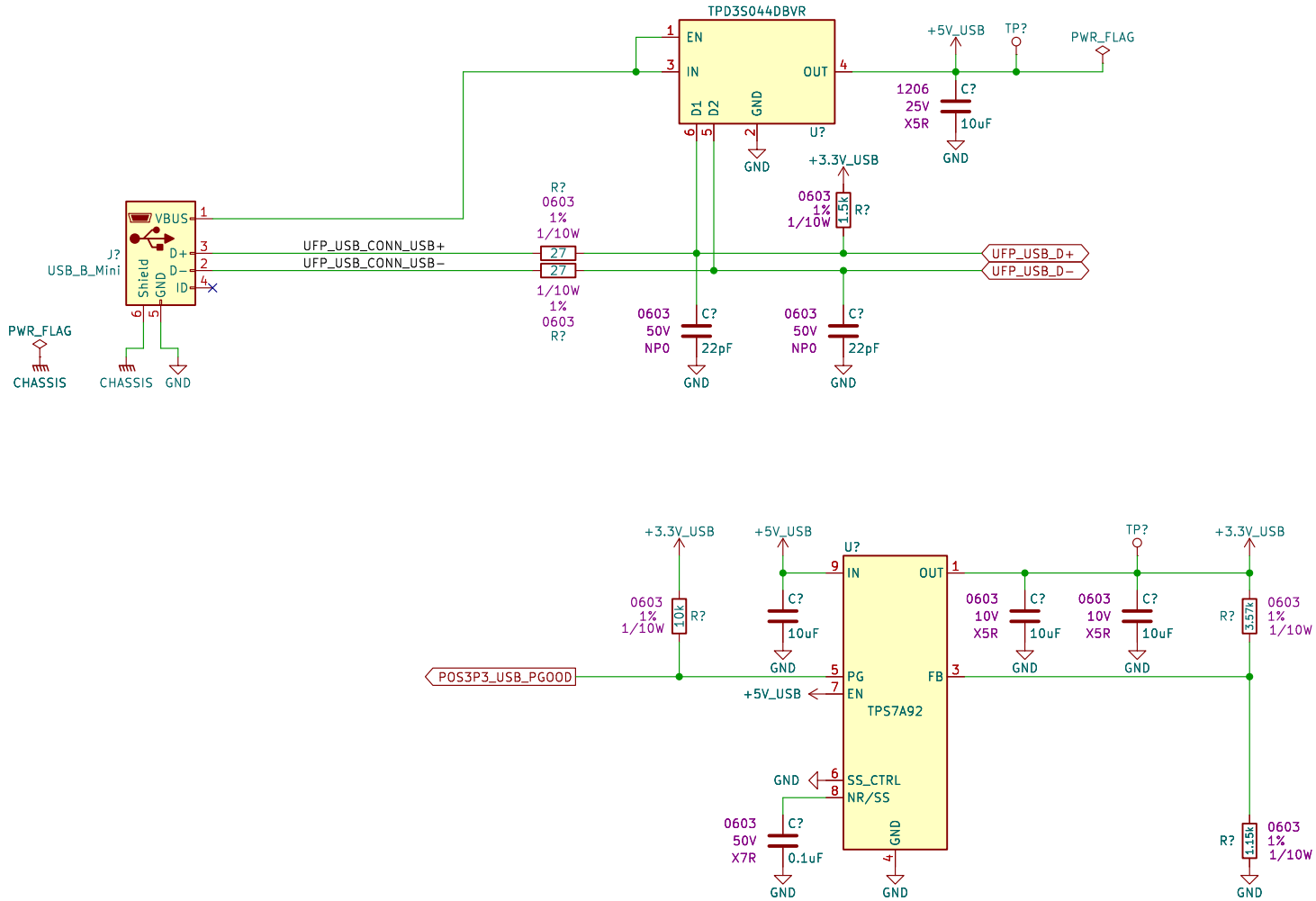

Drew Maatman and Michael Laffin

Sheet: /Upstream USB Port/

File: Upstream_USB_Port.kicad_sch

Title: Thermal Camera

Size: A	Date: 2023-12-07	**Rev: PRELIM**
KiCad E.D.A. kicad 7.0.1		Id: 26/29

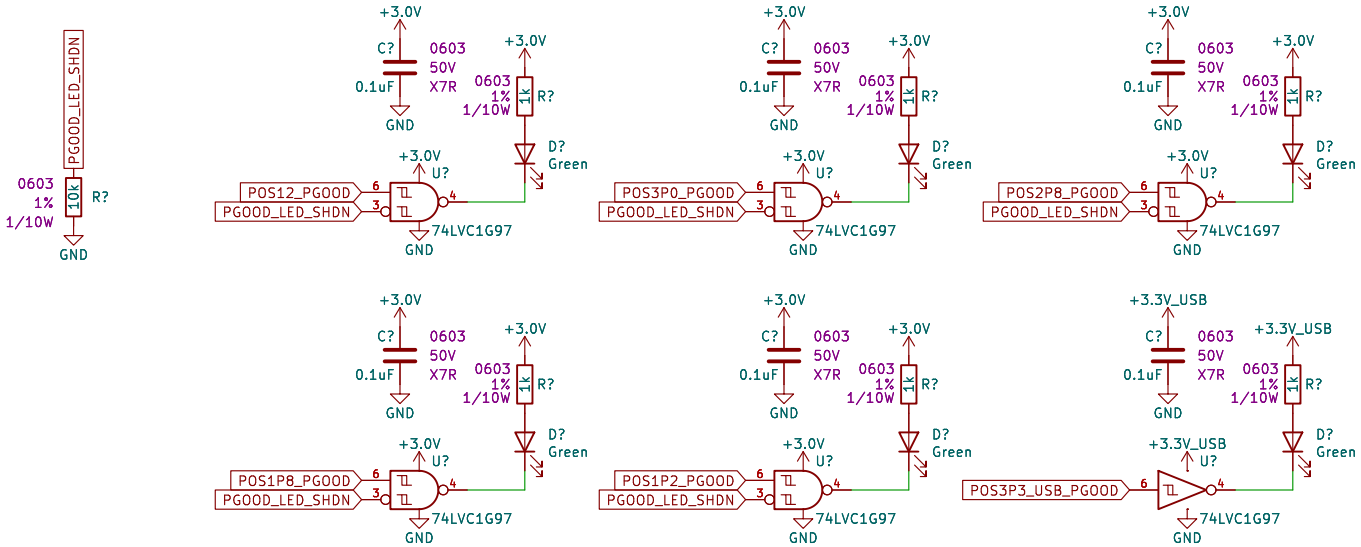

Drew Maatman and Michael Laffin

Sheet: /PGOOD LEDs/

File: PGOOD_LEDs.kicad_sch

Title: Thermal Camera

Size: A	Date: 2023-12-07	Rev: PRELIM
KiCad E.D.A. kicad 7.0.1		Id: 27/29

MUST USE OUTPUT COMPARE PIN

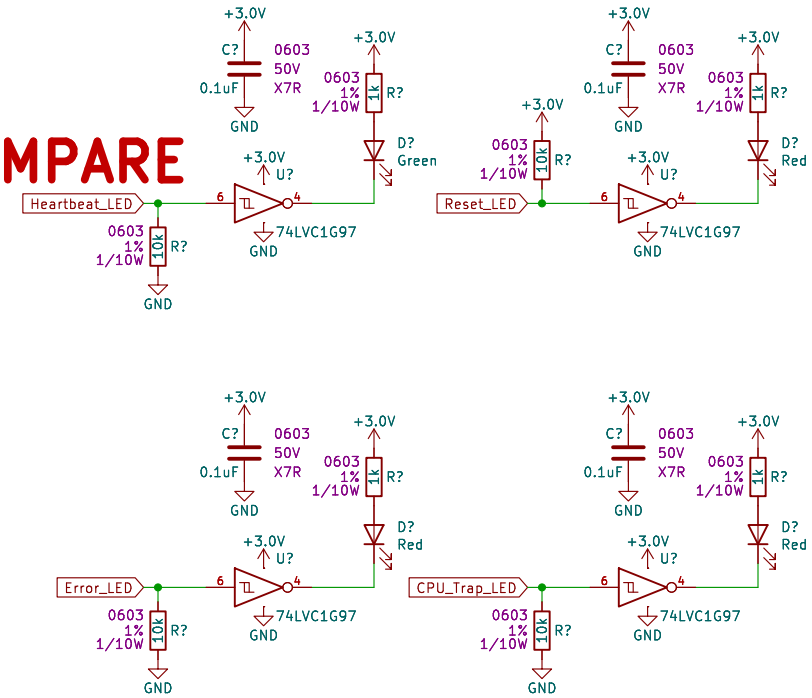

Drew Maatman and Michael Laffin

Sheet: /Status LEDs/
File: Status_LEDs.kicad_sch

Title: Thermal Camera

Size: A	Date: 2023-12-07	**Rev: PRELIM**
KiCad E.D.A. kicad 7.0.1		Id: 28/29

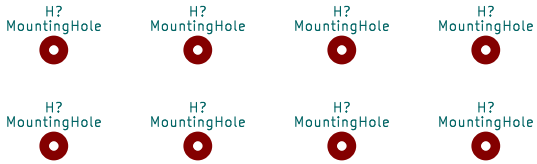

Drew Maatman and Michael Laffin

Sheet: /Mechanical/
File: Mechanical.kicad_sch

Title: Thermal Camera

Size: A	Date: 2023-12-07	**Rev: PRELIM**
KiCad E.D.A. kicad 7.0.1		Id: 29/29