Thermal Camera

https://github.com/drewsum/Thermal_Camera

01. Table of Contents

02. POS12 Input
03. POS12 Telemetry
04. POS3P0 Power Supply
05. POS3P0 Telemetry
06. POS1P8 Power Supply
07. POS1P8 Telemetry
08. POS2P8 Power Supply
09. POS2P8 Telemetry
10. POS1P2 Power Supply
11. POS1P2 Telemetry
12. LCD Backlight Power Supply
13. LCD Backlight Telemetry
14. Battery Management
15. PIC32MZ DA Programming
16. PIC32MZ DA Clocking
17. PIC32MZ DA Power
18. PIC32MZ DA 1
19. PIC32MZ DA 2
20. External Storage
21. Graphic LCD
22. USB UART
23. Elapsed Time Counter
24. FLIR Lepton Sensor
25. USB Hub
26. Upstream USB Port
27. PGOOD LEDs
28. Status LEDs
29. Mechanical

POS12_Input

POS12 Telemetry

POS3P0 Power Supply

POS3P0 Telemetry

POS1P8 Power Supply

POS1P8 Telemetry

POS2P8 Power Supply

POS2P8 Telemetry

POS1P2 Power Supply

POS1P2 Telemetry

LCD Backlight Power Supply

LCD Backlight Telemetry

Battery Management

PIC32MZ DA Programming

PIC32MZ DA Clocking

PIC32MZ DA Power

PIC32MZ DA 1

PIC32MZ DA 2

External Storage

Graphic LCD

USB UART

Elapsed Time Counter

FLIR Lepton Sensor

USB Hub

Upstream USB Port

File: Upstream_USB_Port.kicad_sch

PGOOD LEDs

Status LEDs

Mechanical

Add capacitive touch

Drew Maatman and Michael Laffin

Sheet: /

File: Thermal_Camera.kicad_sch

Title: Thermal Camera

Size: A | Date: 2023-12-07 | **Rev: PRELIM**

KiCad E.D.A. 8.0.1-rc1 | Id: 1/29

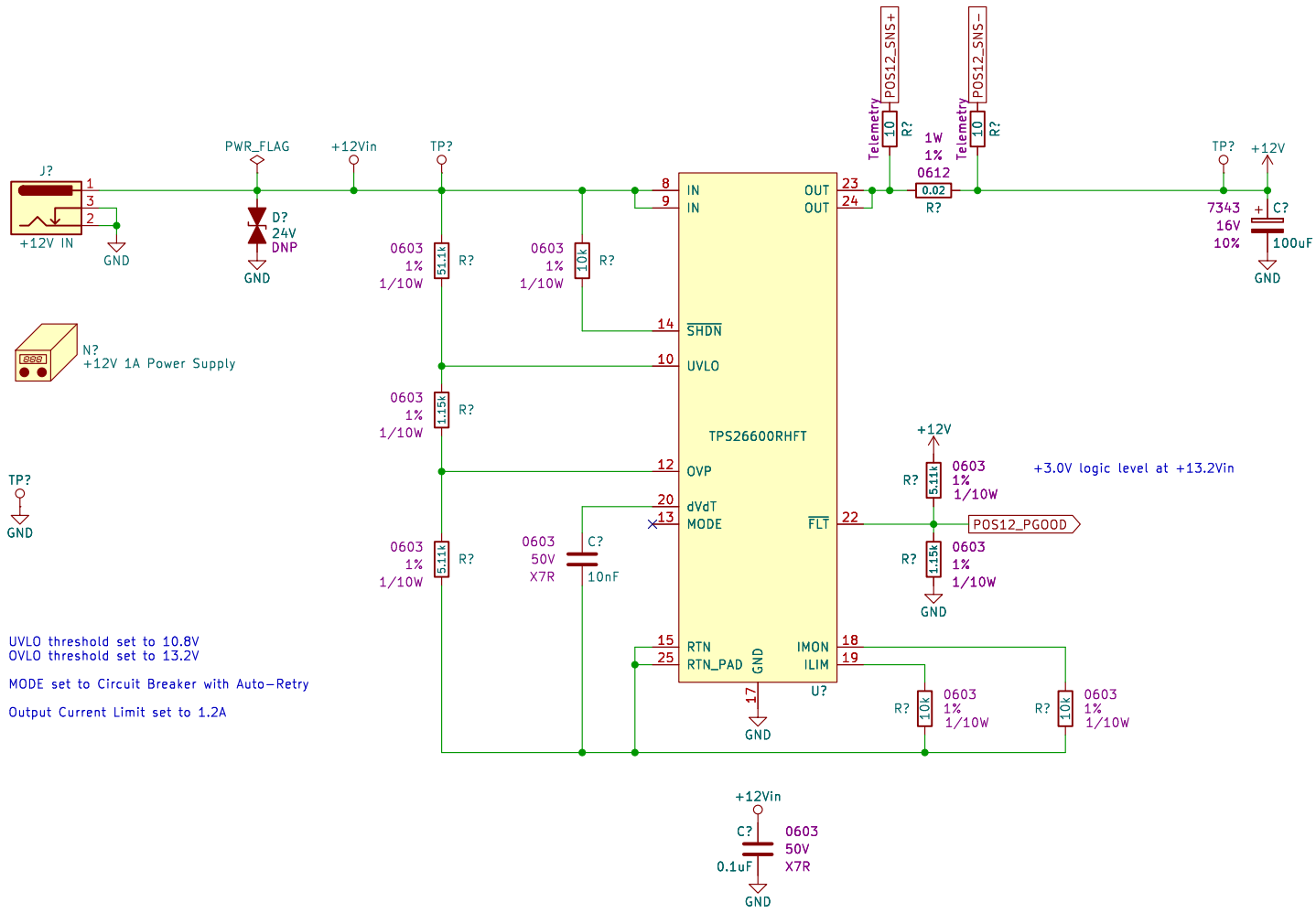

Drew Maatman and Michael Laffin	
Sheet: /POS12_Input/	
File: POS12_Input.kicad_sch	
Title: Thermal Camera	
Size: A	Date: 2023−12−07
KiCad E.D.A. 8.0.1−rc1	Id: 2/29

Rev: PRELIM

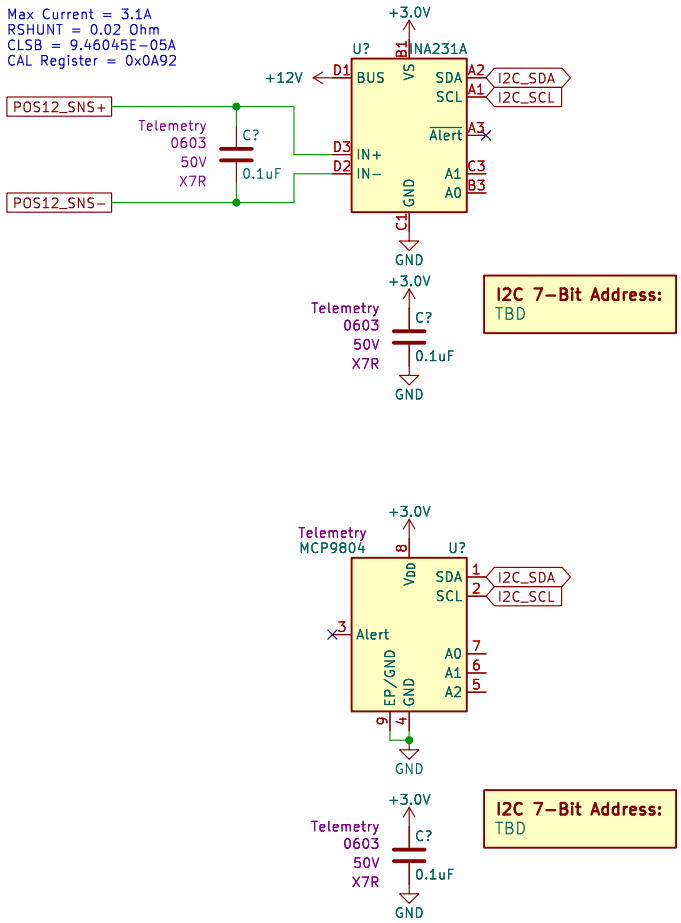

Drew Maatman and Michael Laffin		
Sheet: /POS12 Telemetry/		
File: POS12_Telemetry.kicad_sch		
Title: Thermal Camera		
Size: A	Date: 2023-12-07	**Rev: PRELIM**
KiCad E.D.A. 8.0.1-rc1		Id: 3/29

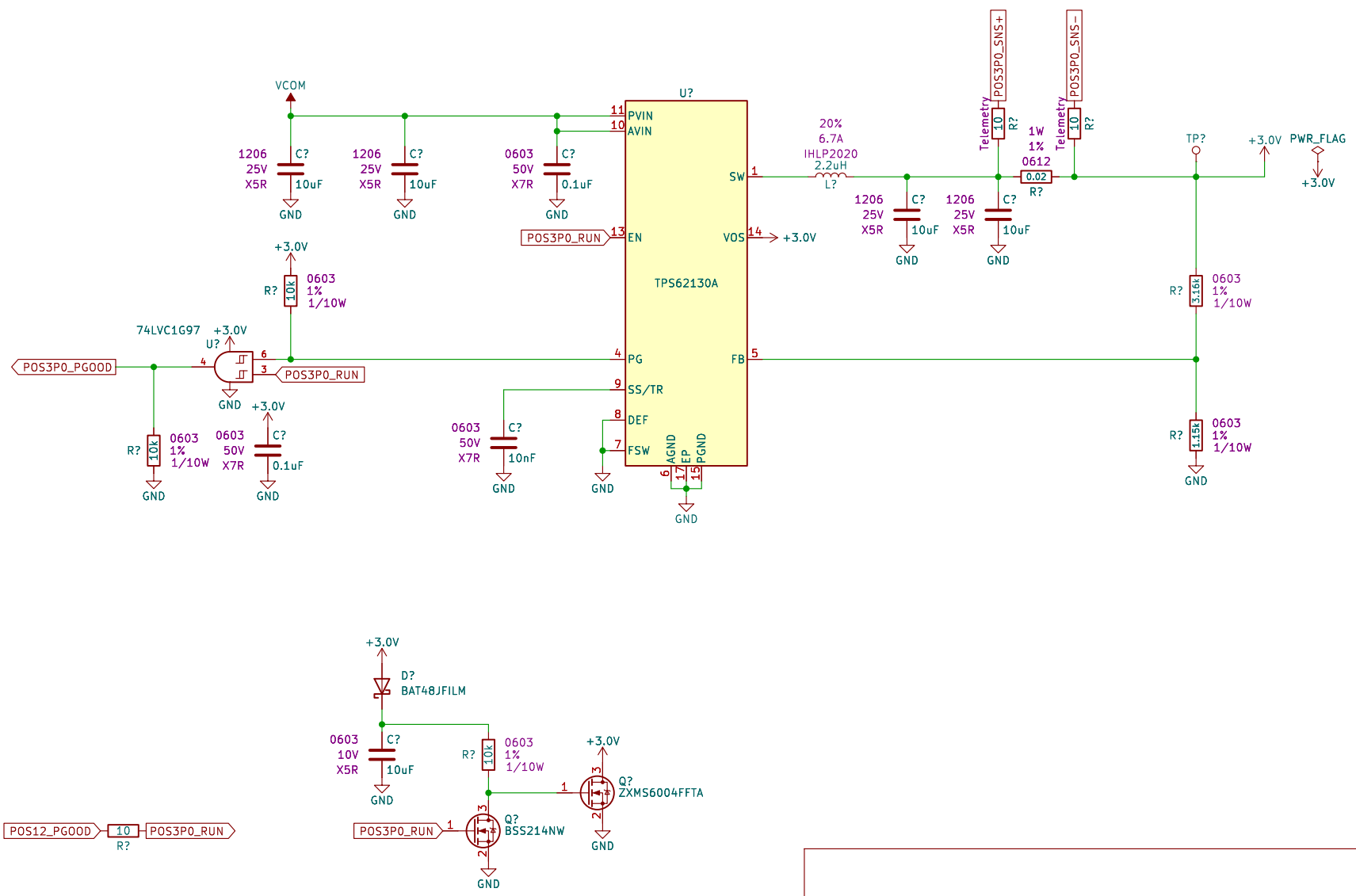

Drew Maatman and Michael Laffin		
Sheet: /POS3P0 Power Supply/		
File: POS3P0_Power_Supply.kicad_sch		
Title: Thermal Camera		
Size: A	Date: 2023-12-07	**Rev: PRELIM**
KiCad E.D.A. 8.0.1-rc1		Id: 4/29

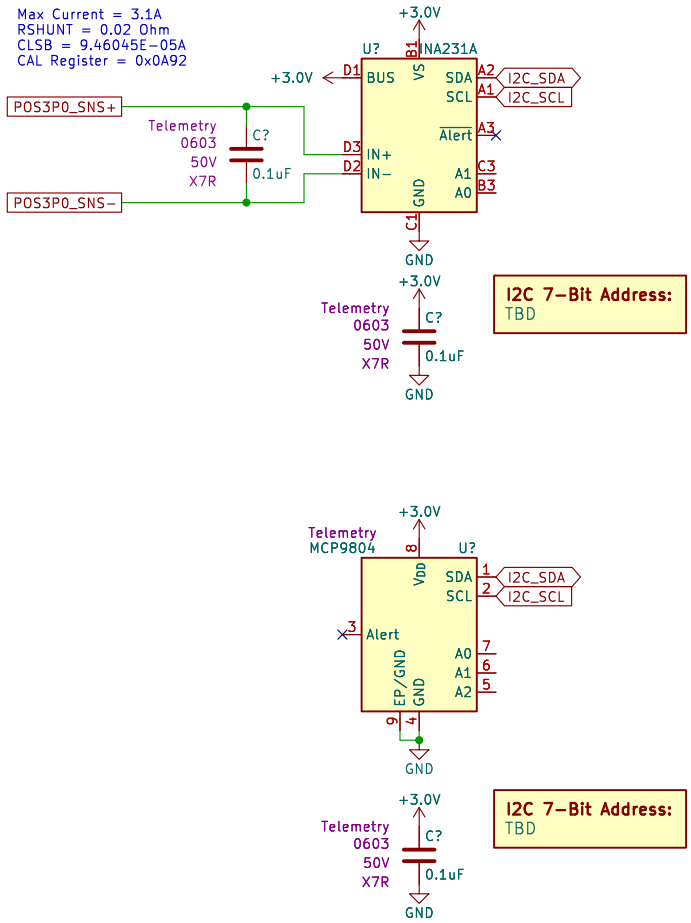

Drew Maatman and Michael Laffin		
Sheet: /POS3P0 Telemetry/		
File: POS3P0_Telemetry.kicad_sch		
Title: Thermal Camera		
Size: A	Date: 2023-12-07	**Rev: PRELIM**
KiCad E.D.A. 8.0.1-rc1		Id: 5/29

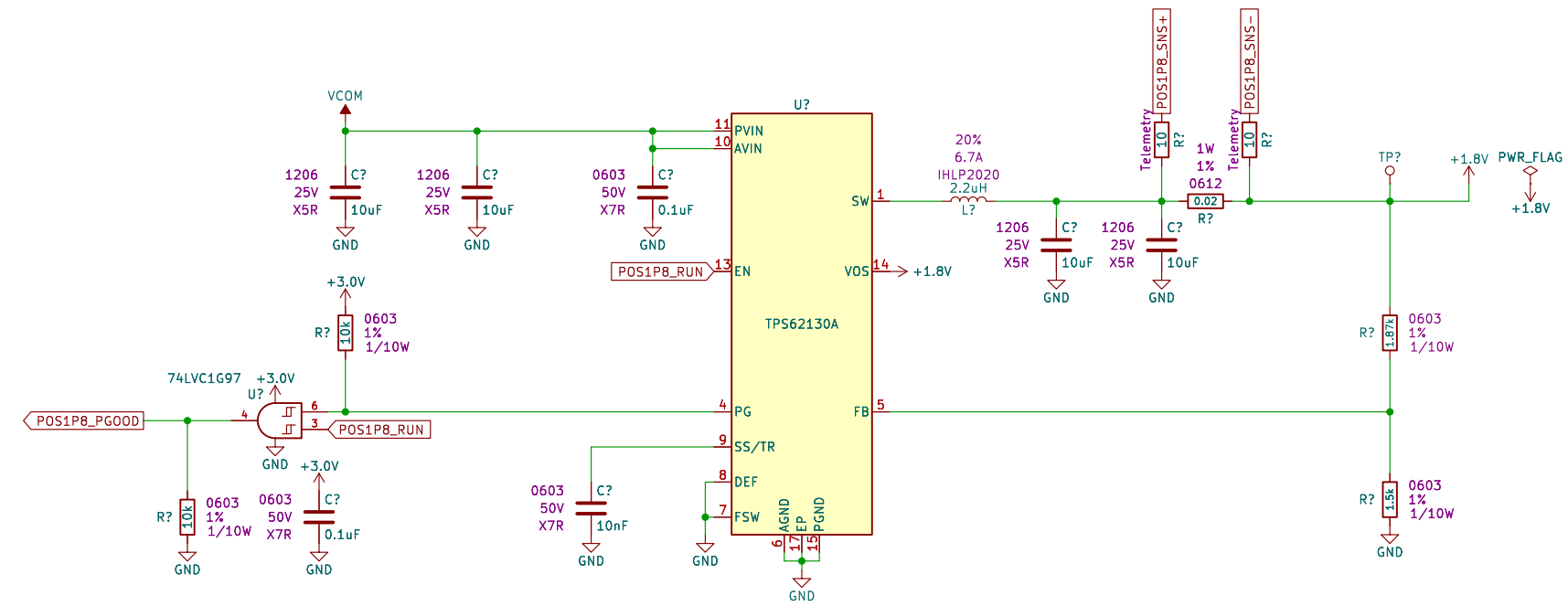

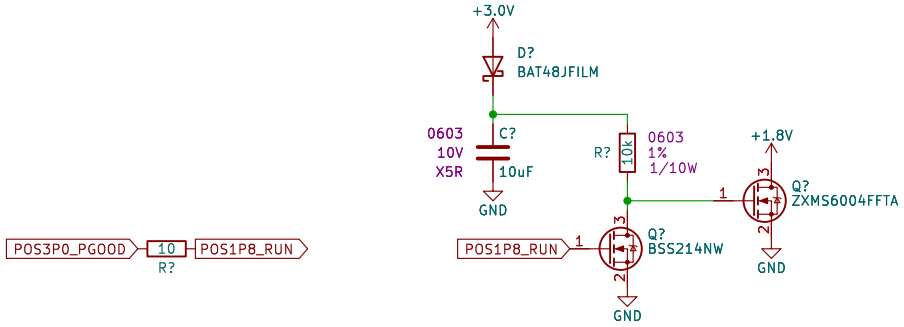

Drew Maatman and Michael Laffin		
Sheet: /POS1P8 Power Supply/		
File: POS1P8_Power_Supply.kicad_sch		
Title: Thermal Camera		
Size: A	Date: 2023-12-07	**Rev: PRELIM**
KiCad E.D.A. 8.0.1-rc1		Id: 6/29

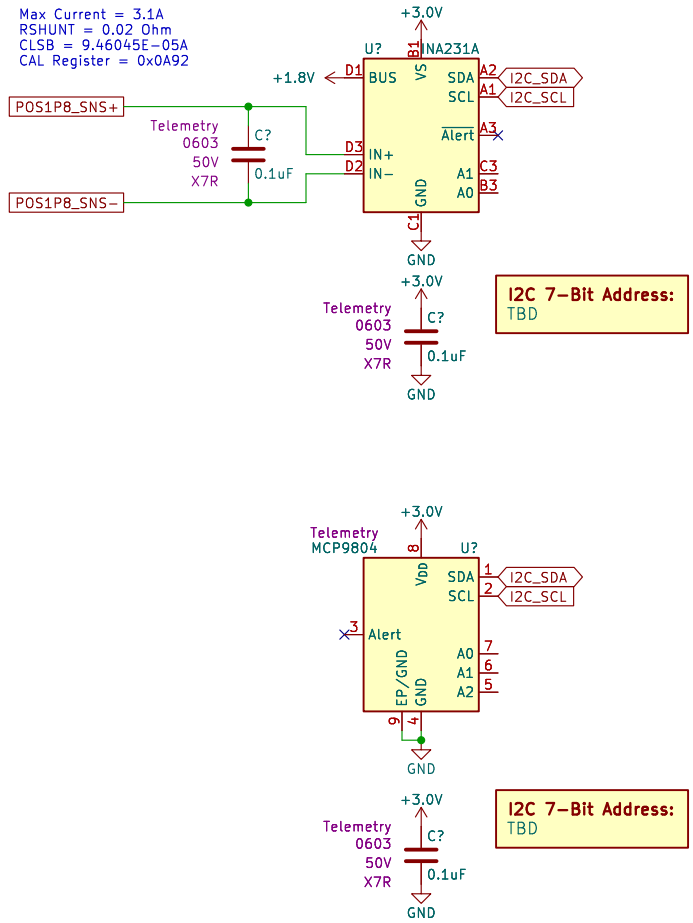

Drew Maatman and Michael Laffin		
Sheet: /POS1P8 Telemetry/		
File: POS1P8_Telemetry.kicad_sch		
Title: Thermal Camera		
Size: A	Date: 2023-12-07	**Rev: PRELIM**
KiCad E.D.A. 8.0.1-rc1		Id: 7/29

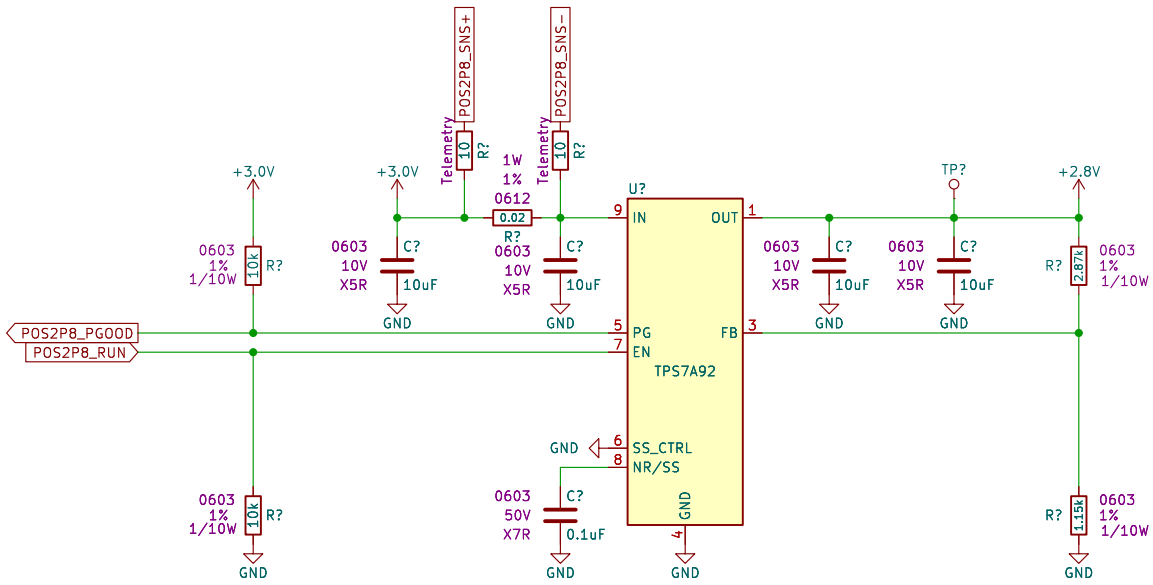

Drew Maatman and Michael Laffin		
Sheet: /POS2P8 Power Supply/		
File: POS2P8_Power_Supply.kicad_sch		
Title: Thermal Camera		
Size: A	Date: 2023-12-07	**Rev: PRELIM**
KiCad E.D.A. 8.0.1-rc1		Id: 8/29

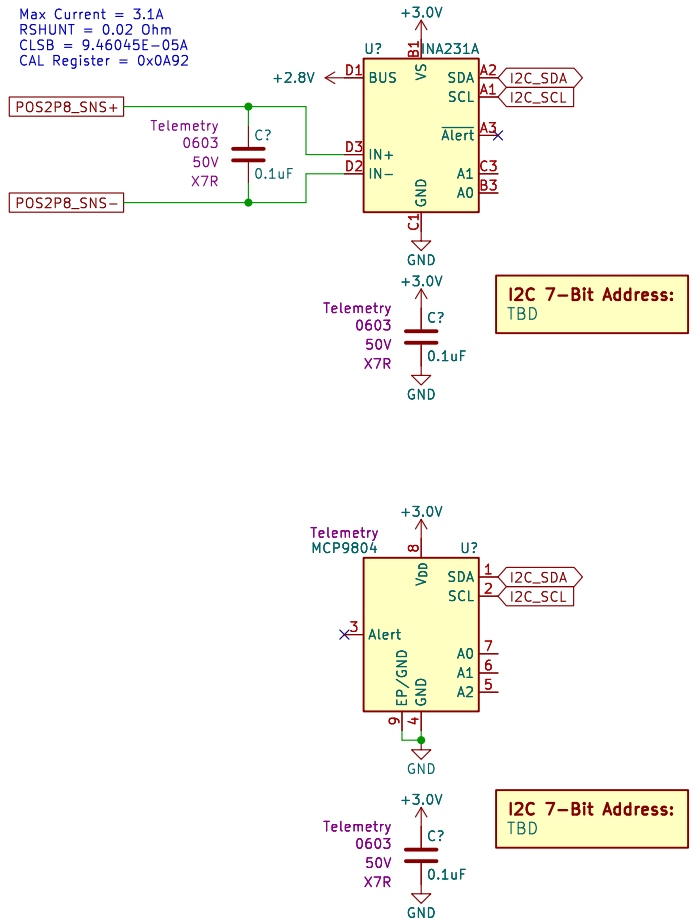

Drew Maatman and Michael Laffin		
Sheet: /POS2P8 Telemetry/		
File: POS2P8_Telemetry.kicad_sch		
Title: Thermal Camera		
Size: A	Date: 2023-12-07	**Rev: PRELIM**
KiCad E.D.A. 8.0.1-rc1		Id: 9/29

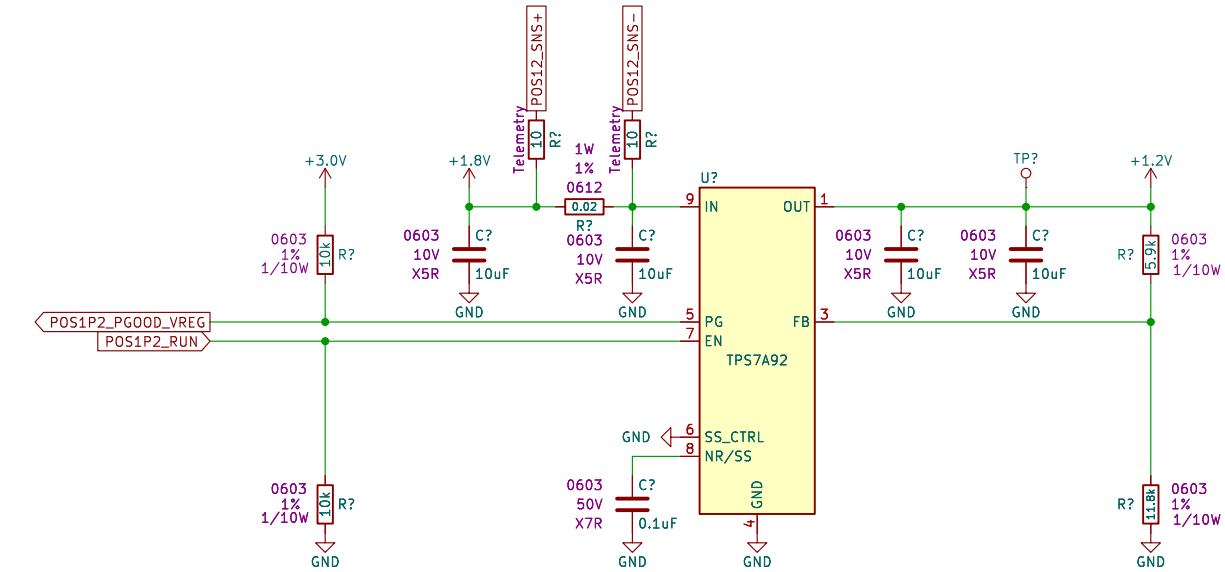

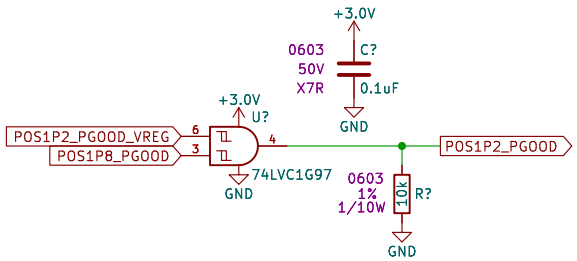

Drew Maatman and Michael Laffin

Sheet: /POS1P2 Power Supply/
File: POS1P2_Power_Supply.kicad_sch

Title: Thermal Camera

Size: A	Date: 2023-12-07	**Rev: PRELIM**
KiCad E.D.A. 8.0.1-rc1		Id: 10/29

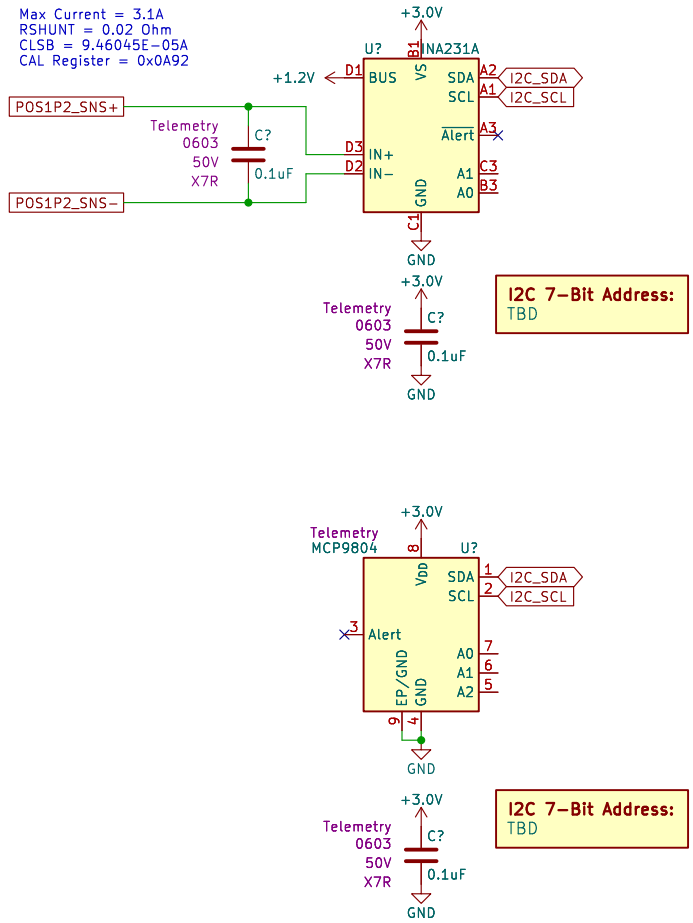

Drew Maatman and Michael Laffin		
Sheet: /POS1P2 Telemetry/		
File: POS1P2_Telemetry.kicad_sch		
Title: Thermal Camera		
Size: A	Date: 2023-12-07	**Rev: PRELIM**
KiCad E.D.A. 8.0.1-rc1		Id: 11/29

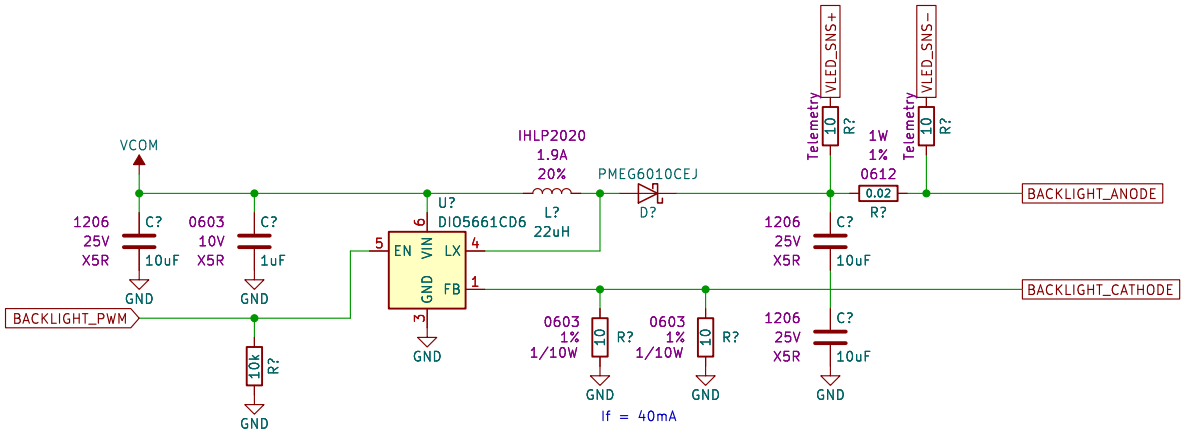

Drew Maatman and Michael Laffin		
Sheet: /LCD Backlight Power Supply/		
File: LCD_Backlight_Power_Supply.kicad_sch		
Title: Thermal Camera		
Size: A	Date: 2023-12-07	**Rev: PRELIM**
KiCad E.D.A. 8.0.1-rc1		Id: 12/29

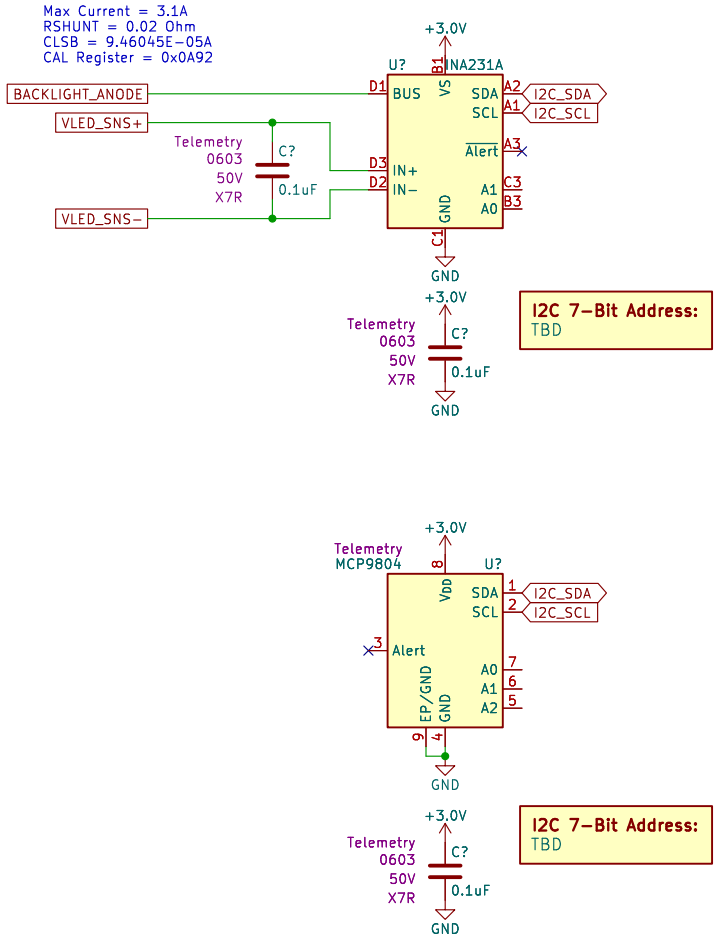

Drew Maatman and Michael Laffin		
Sheet: /LCD Backlight Telemetry/		
File: LCD_Backlight_Telemetry.kicad_sch		
Title: Thermal Camera		
Size: A	Date: 2023-12-07	**Rev: PRELIM**
KiCad E.D.A. 8.0.1-rc1		Id: 13/29

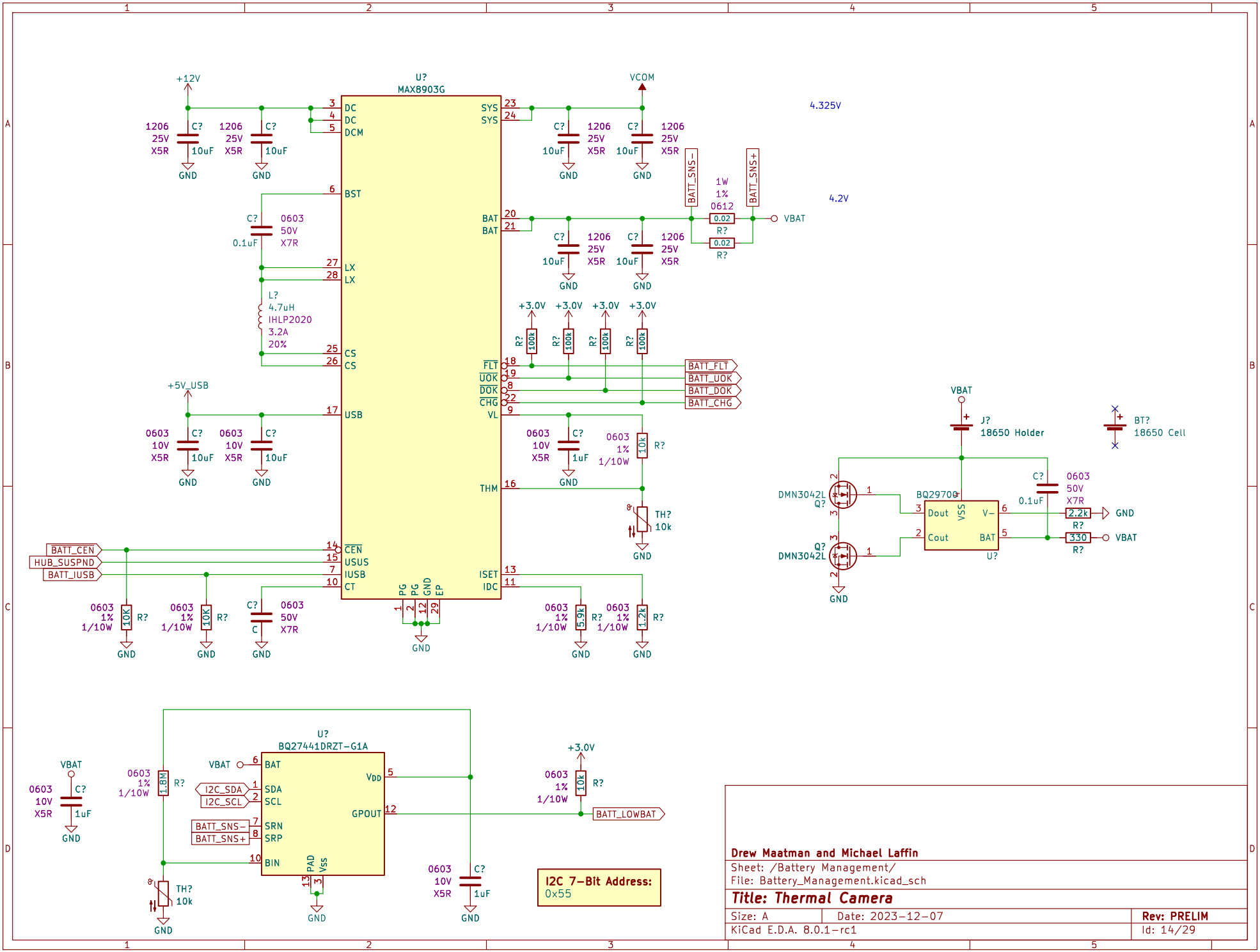
U?
MAX8903G
+12V
VCOM
4.325V
4.2V
VBAT
BATT_SNS-
BATT_SNS+
1W
1%
0612
0.02
R?
DC
DCM
SYS
BST
BAT
LX
CS
USB
FLT
UOK
DOK
CHG
VL
THM
CEN
USUS
IUSB
CT
ISET
IDC
PG
GND
EP
1206
25V
X5R
10uF
C?
0603
50V
X7R
0.1uF
L?
4.7uH
IHLP2020
3.2A
20%
+5V_USB
0603
10V
X5R
1uF
+3.0V
100k
BATT_FLT
BATT_UOK
BATT_DOK
BATT_CHG
0603
1%
1/10W
10k
TH?
10k
BATT_CEN
HUB_SUSPND
BATT_IUSB
5.9k
1.2k
J?
18650 Holder
BT?
18650 Cell
DMN3042L
Q?
BQ29700
Dout
Cout
VSS
V-
BAT
U?
2.2k
330
GND
U?
BQ27441DRZT-G1A
VBAT
BAT
SDA
SCL
SRN
SRP
BIN
PAD
Vss
VDD
GPOUT
I2C_SDA
I2C_SCL
BATT_SNS-
BATT_SNS+
1.8M
BATT_LOWBAT
I2C 7-Bit Address:
0x55
Drew Maatman and Michael Laffin
Sheet: /Battery Management/
File: Battery_Management.kicad_sch
Title: Thermal Camera
Size: A
Date: 2023-12-07
Rev: PRELIM
KiCad E.D.A. 8.0.1-rc1
Id: 14/29

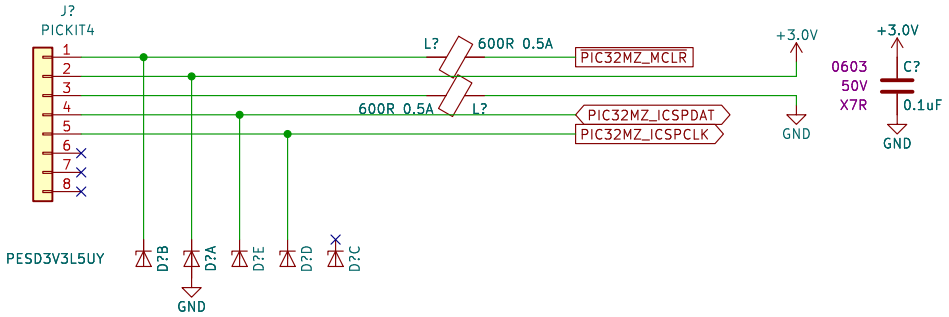

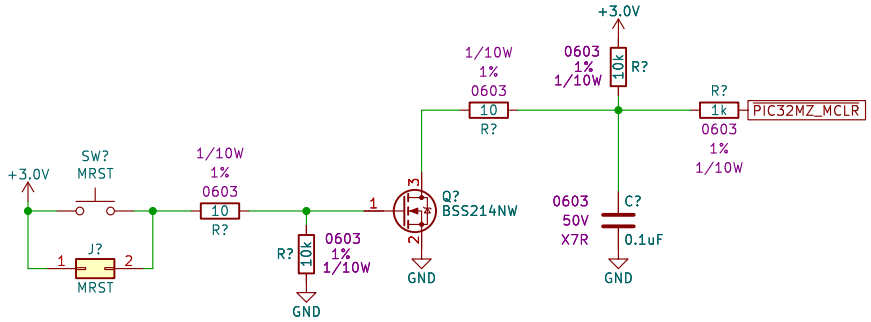

Drew Maatman and Michael Laffin		
Sheet: /PIC32MZ DA Programming/		
File: PIC32MZ_DA_Programming.kicad_sch		
Title: Thermal Camera		
Size: A	Date: 2023-12-07	**Rev: PRELIM**
KiCad E.D.A. 8.0.1-rc1		Id: 15/29

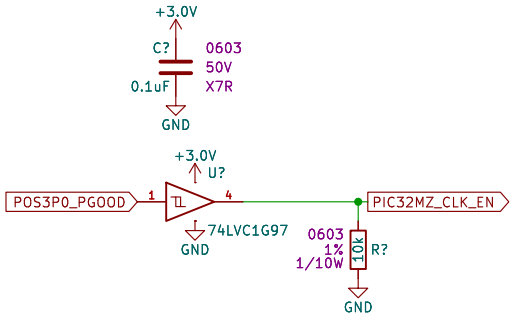

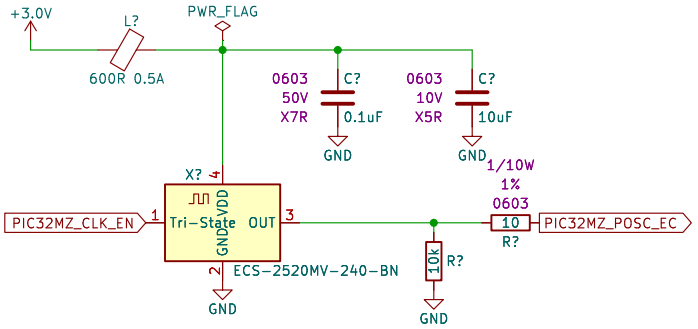

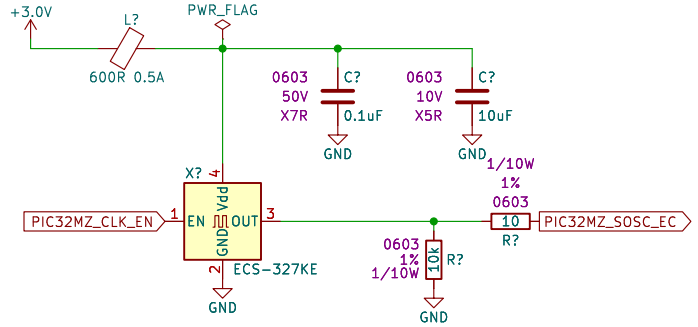

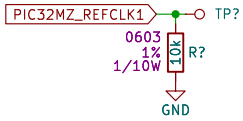

Drew Maatman and Michael Laffin		
Sheet: /PIC32MZ DA Clocking/		
File: PIC32MZ_DA_Clocking.kicad_sch		
Title: Thermal Camera		
Size: A	Date: 2023-12-07	**Rev: PRELIM**
KiCad E.D.A. 8.0.1-rc1		Id: 16/29

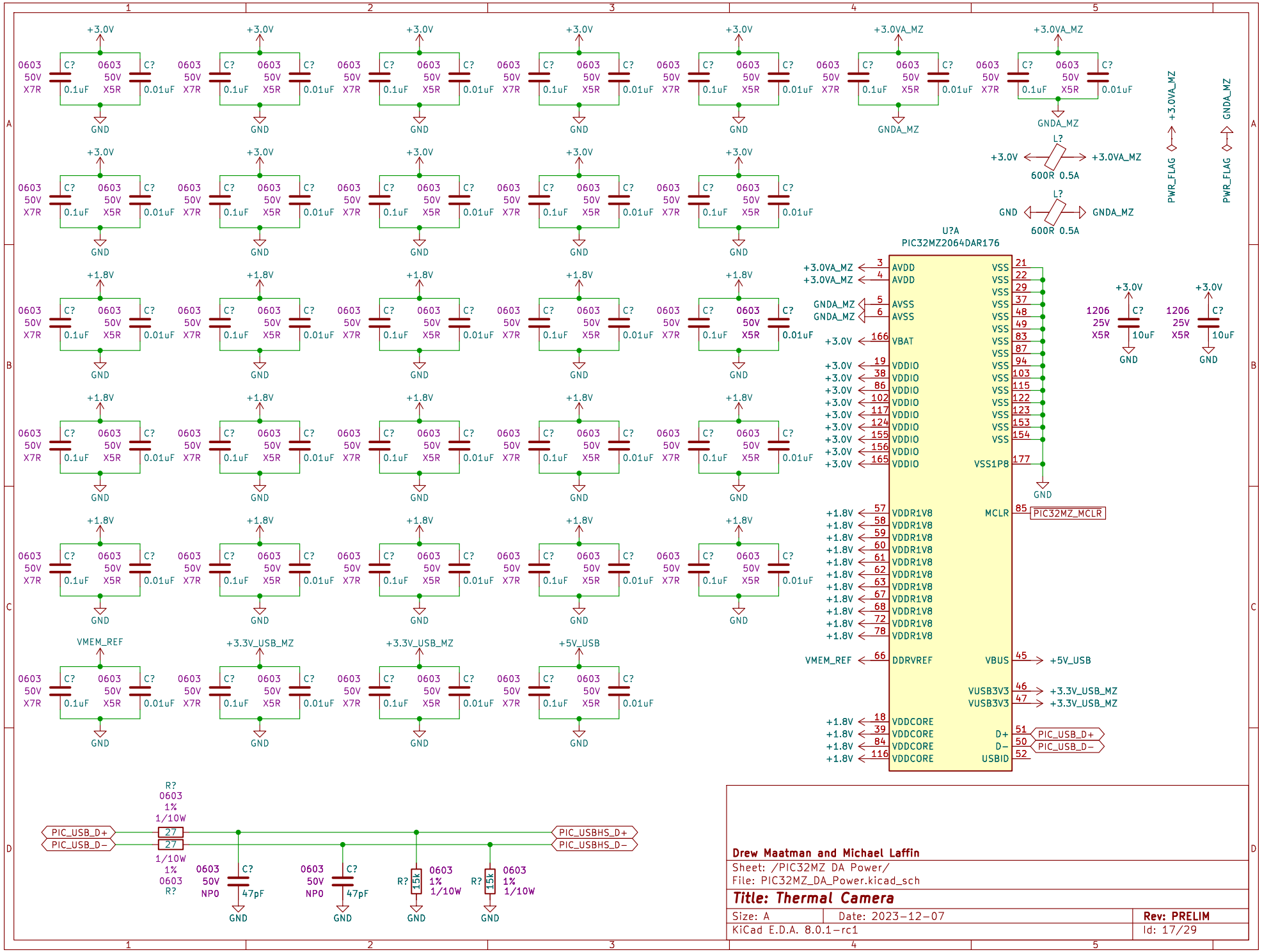

Drew Maatman and Michael Laffin

Sheet: /PIC32MZ DA Power/

File: PIC32MZ_DA_Power.kicad_sch

Title: Thermal Camera

Size: A	Date: 2023-12-07	Rev: PRELIM
KiCad E.D.A. 8.0.1-rc1		Id: 17/29

See TABLE 36-1:RGB COLOR MAPPING for Graphic LCD Pin Mapping

DOUBLE CHECK SOSC PIN

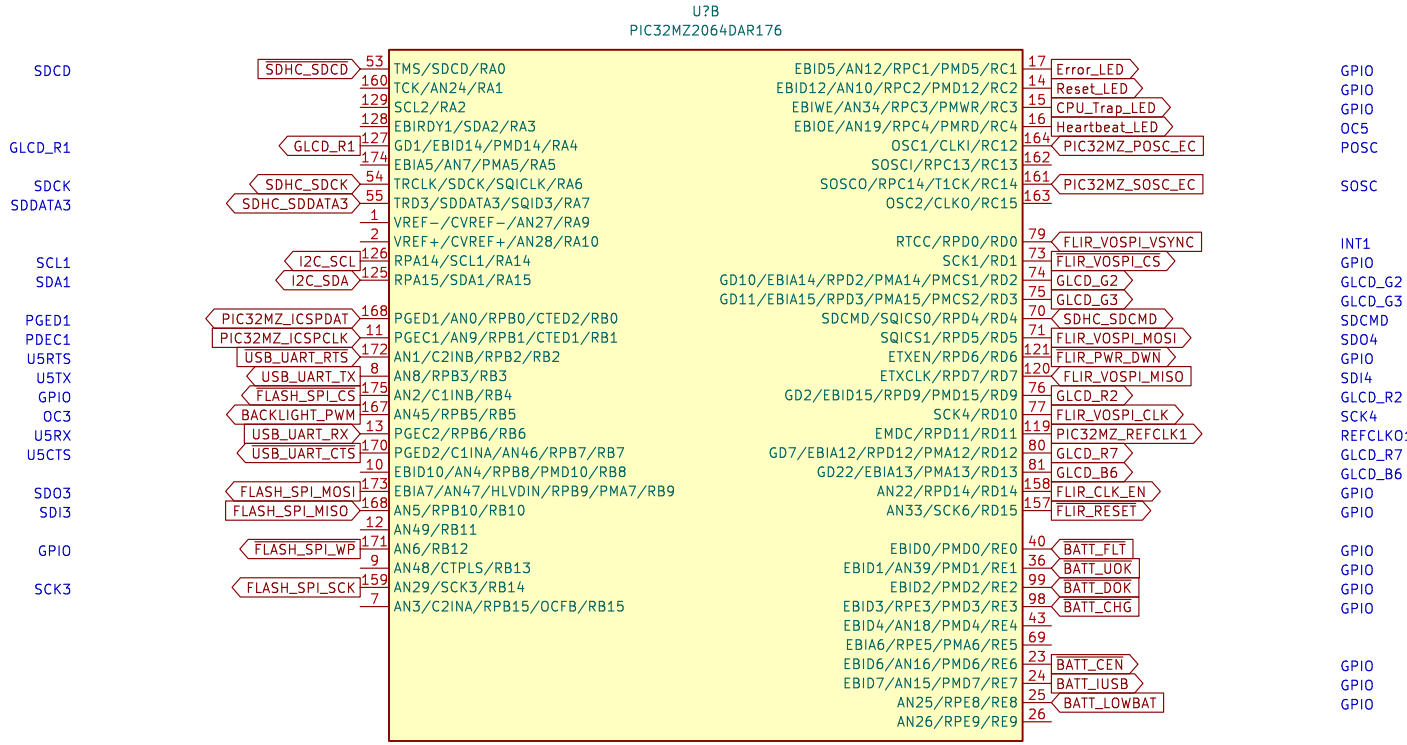

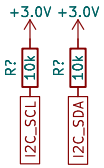

Drew Maatman and Michael Laffin

Sheet: /PIC32MZ DA 1/

File: PIC32MZ_DA_1.kicad_sch

Title: Thermal Camera

Size: A	Date: 2023-12-07	**Rev: PRELIM**
KiCad E.D.A. 8.0.1-rc1		Id: 18/29

See TABLE 36-1:RGB COLOR MAPPING for Graphic LCD Pin Mapping

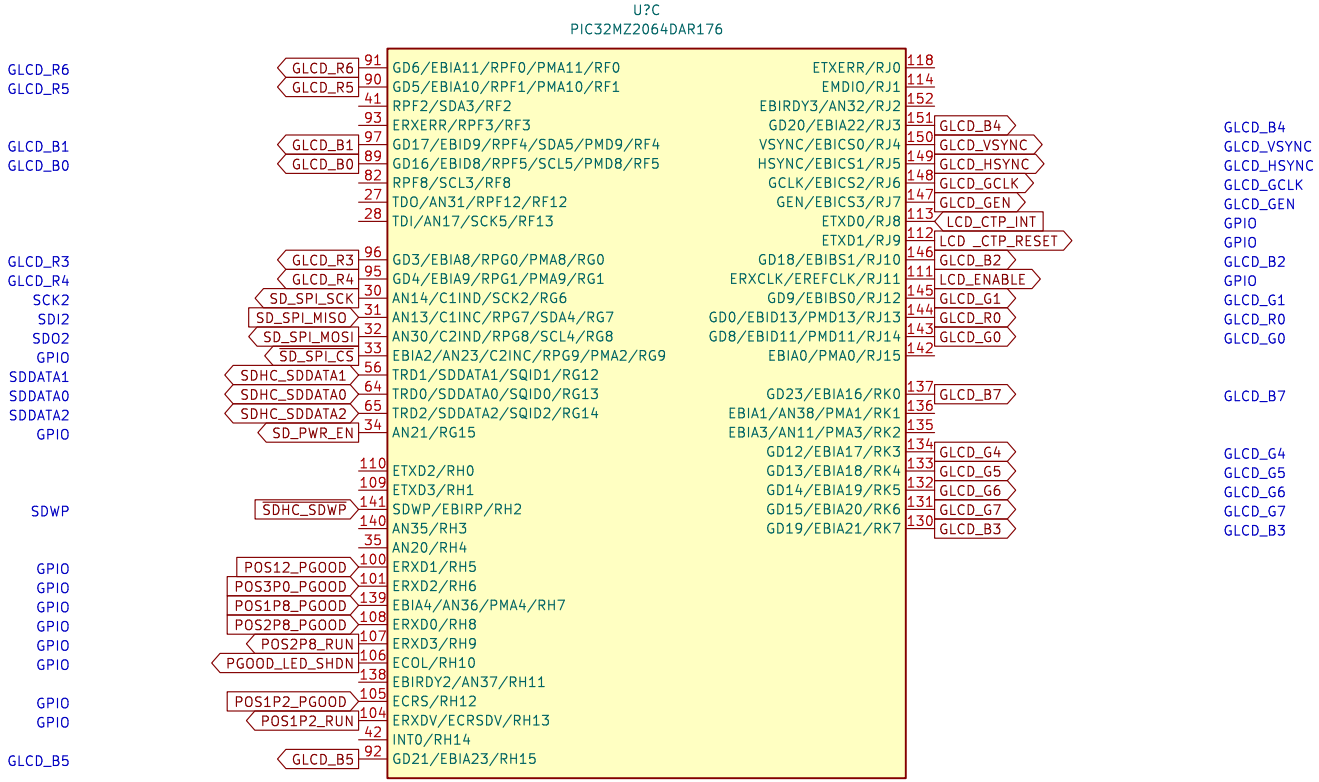

Drew Maatman and Michael Laffin

Sheet: /PIC32MZ DA 2/
File: PIC32MZ_DA_2.kicad_sch

Title: Thermal Camera

Size: A	Date: 2023-12-07	**Rev: PRELIM**
KiCad E.D.A. 8.0.1-rc1		Id: 19/29

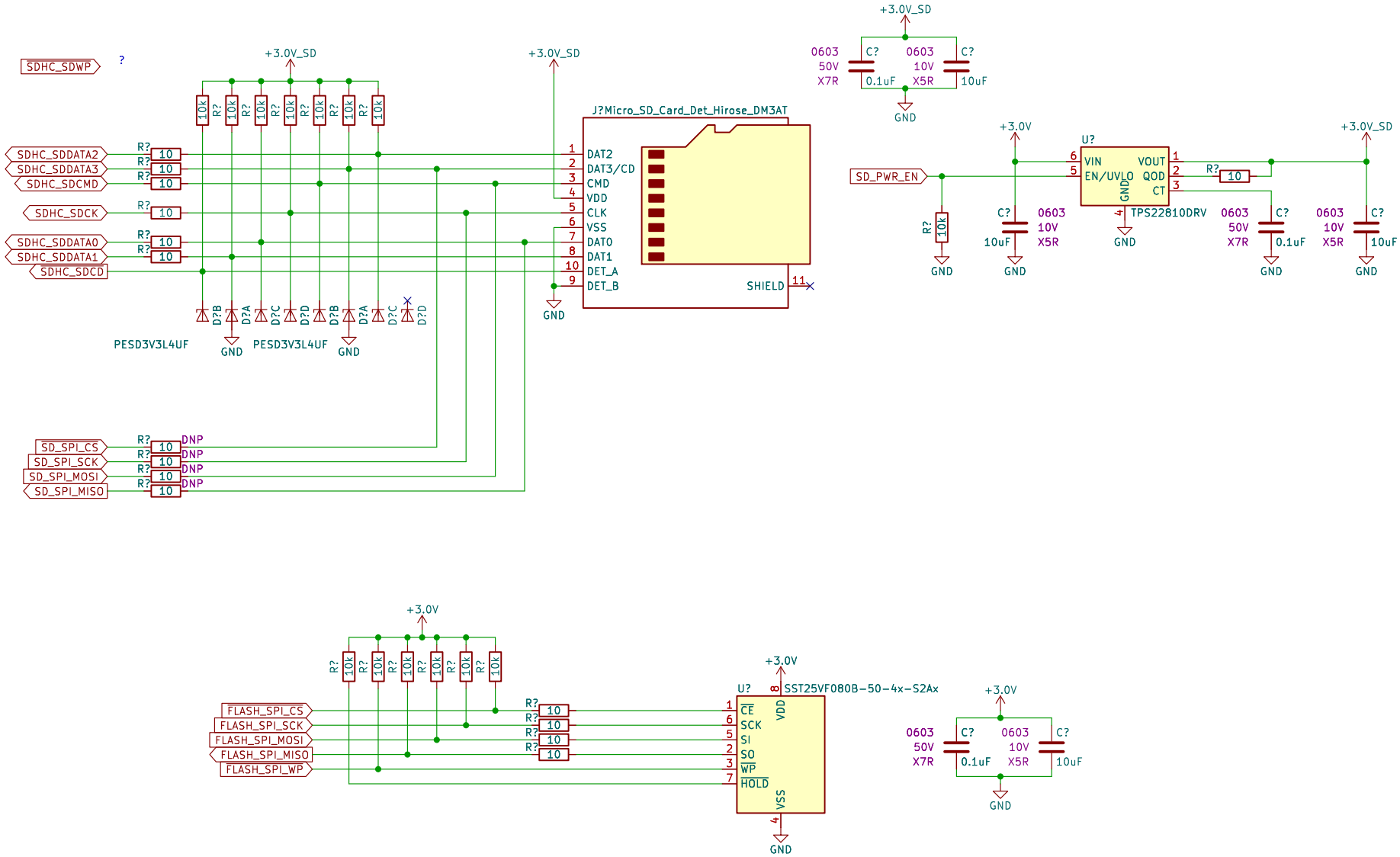

Drew Maatman and Michael Laffin	
Sheet: /External Storage/	
File: External_Storage.kicad_sch	
Title: Thermal Camera	
Size: A	Date: 2023-12-07
KiCad E.D.A. 8.0.1-rc1	Id: 20/29
	Rev: PRELIM

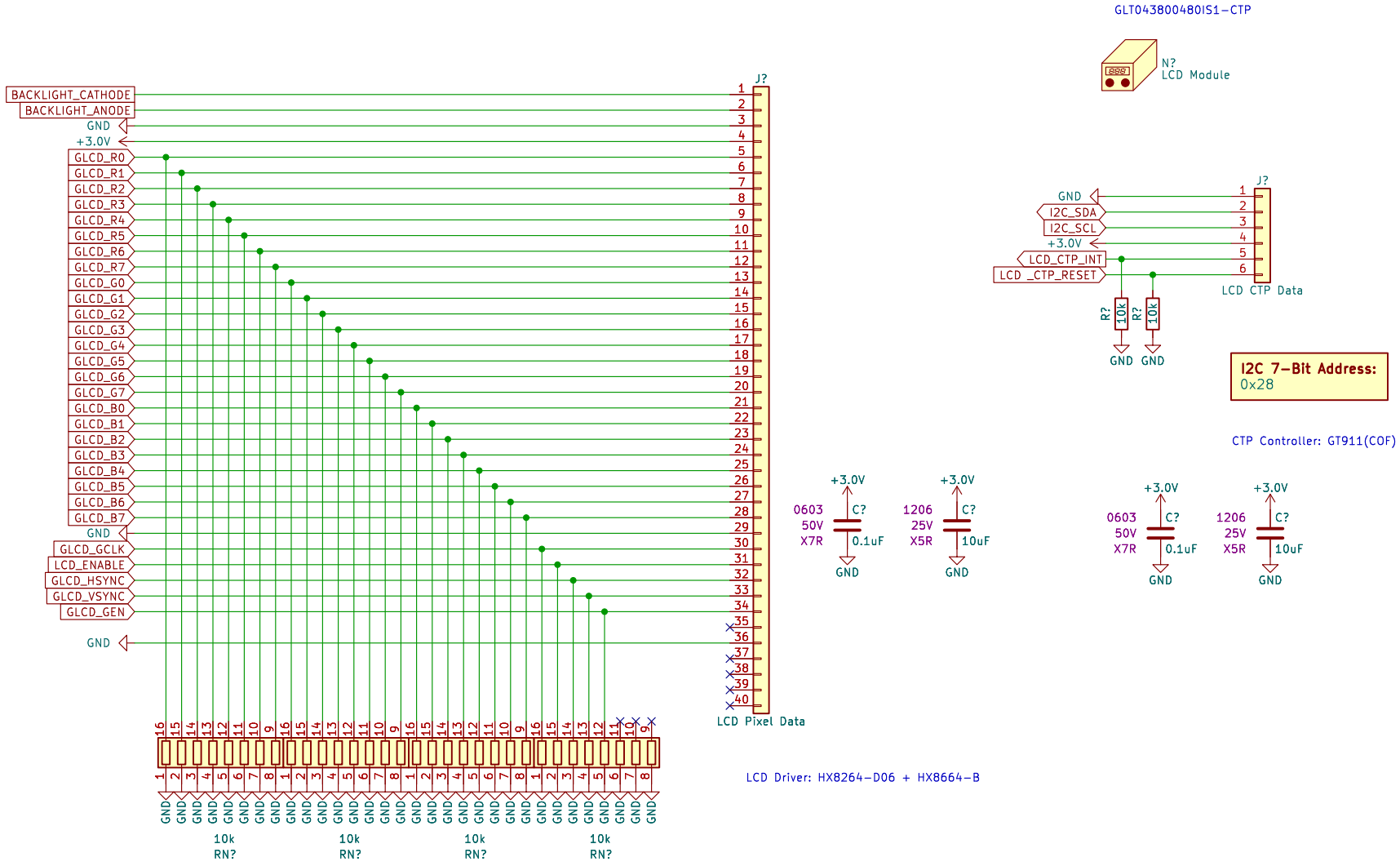

Drew Maatman and Michael Laffin		
Sheet: /Graphic LCD/		
File: Graphic_LCD.kicad_sch		
Title: Thermal Camera		
Size: A	Date: 2023-12-07	**Rev: PRELIM**
KiCad E.D.A. 8.0.1-rc1		Id: 21/29

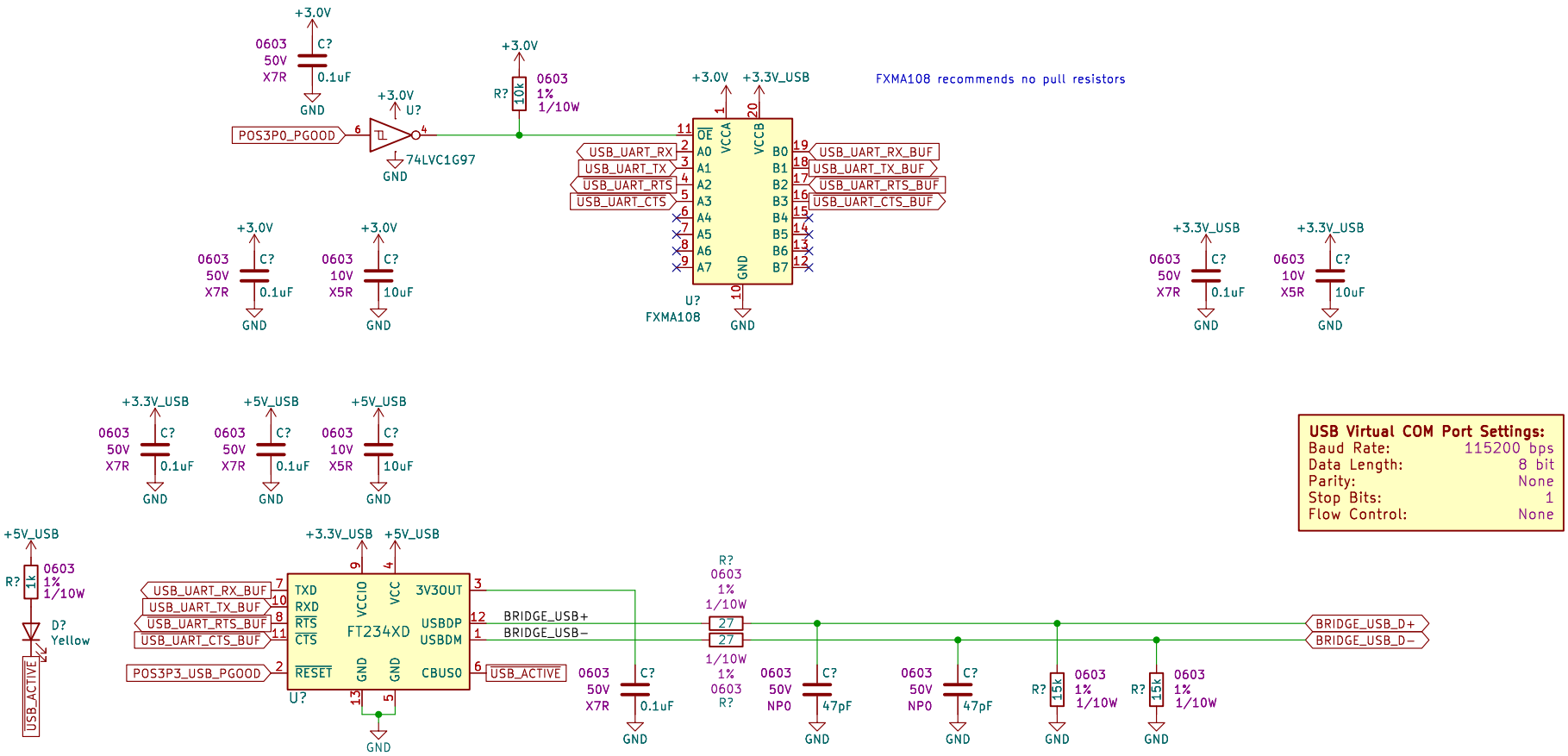

Drew Maatman and Michael Laffin		
Sheet: /USB UART/		
File: USB_UART.kicad_sch		
Title: Thermal Camera		
Size: A	Date: 2023-12-07	Rev: PRELIM
KiCad E.D.A. 8.0.1-rc1		Id: 22/29

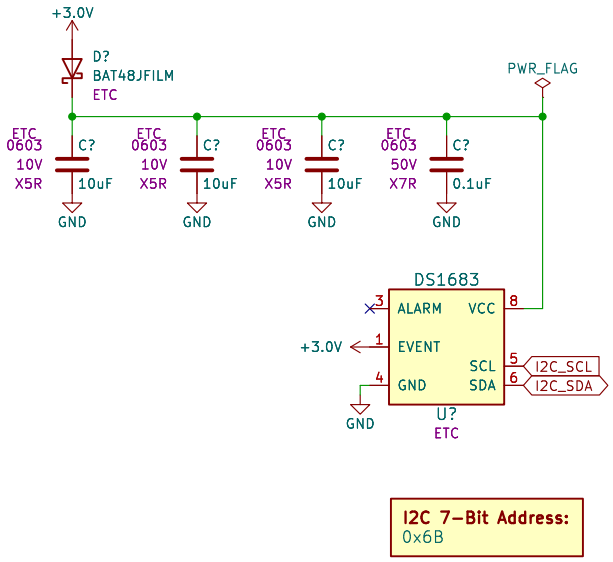

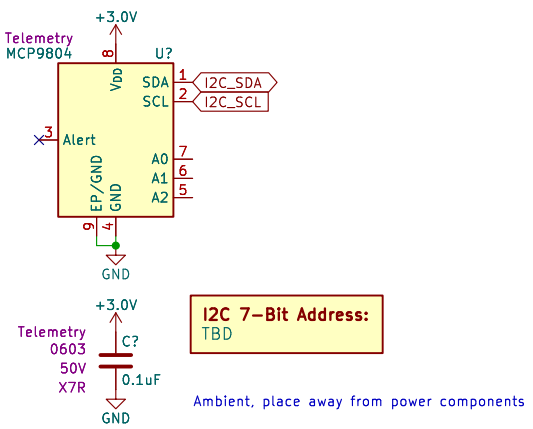

Drew Maatman and Michael Laffin

Sheet: /Elapsed Time Counter/

File: Elapsed_Time_Counter.kicad_sch

Title: Thermal Camera

Size: A	Date: 2023-12-07	**Rev: PRELIM**
KiCad E.D.A. 8.0.1-rc1		Id: 23/29

Power Supply Considerations:
VDDC: 1.20V (1.14V min, 1.26V max), 50mVpp max ripple, 110mA max draw
VDD: 2.80V (2.72V min, 2.88V max), 30mVpp max ripple, 16mA max draw
VDDIO: 2.8V min, 3.1V max, 50mVpp max ripple, 310mA max draw

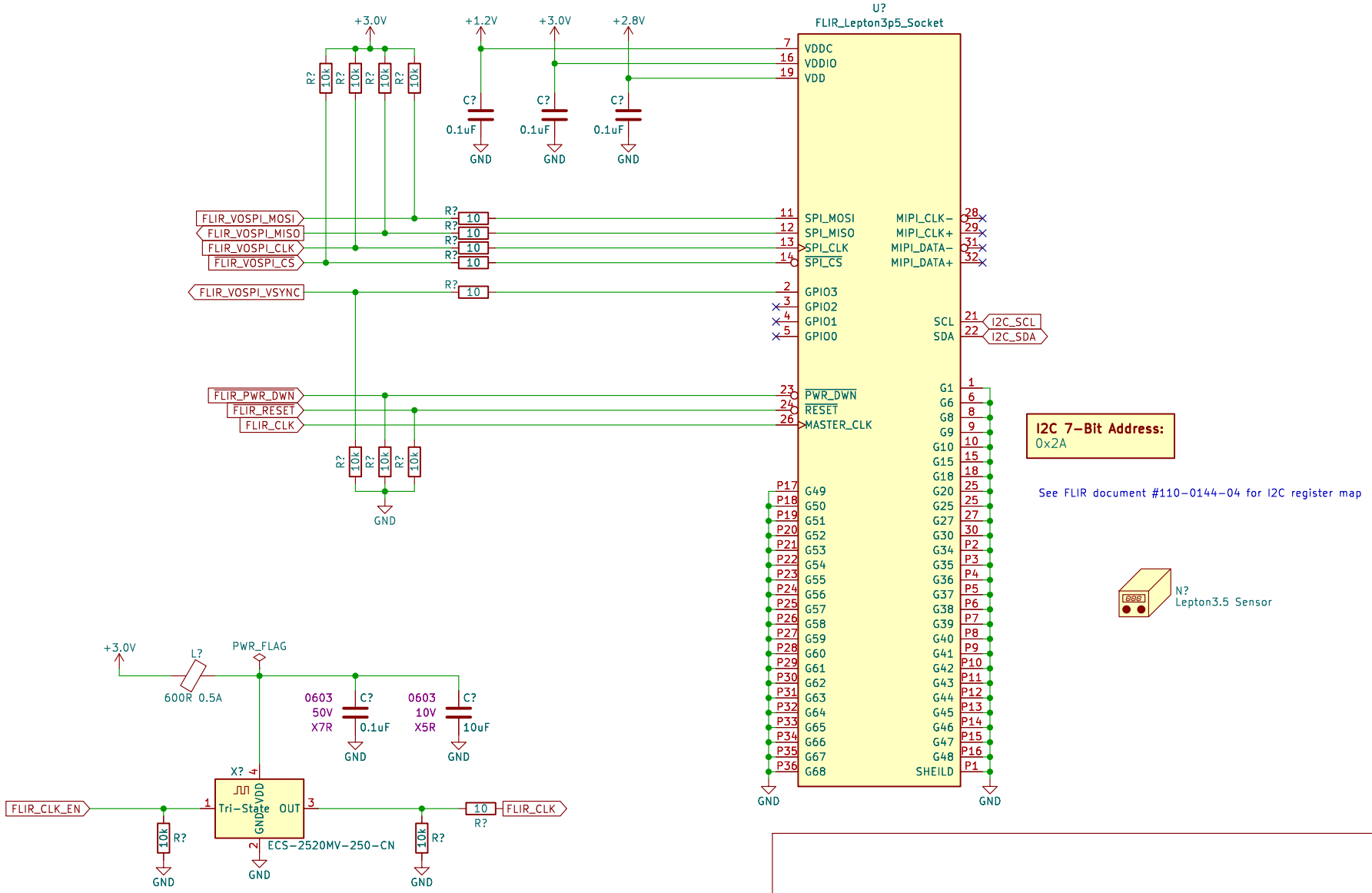

Drew Maatman and Michael Laffin		
Sheet: /FLIR Lepton Sensor/		
File: FLIR_Lepton_Sensor.kicad_sch		
Title: Thermal Camera		
Size: A	Date: 2023−12−07	**Rev: PRELIM**
KiCad E.D.A. 8.0.1−rc1		Id: 24/29

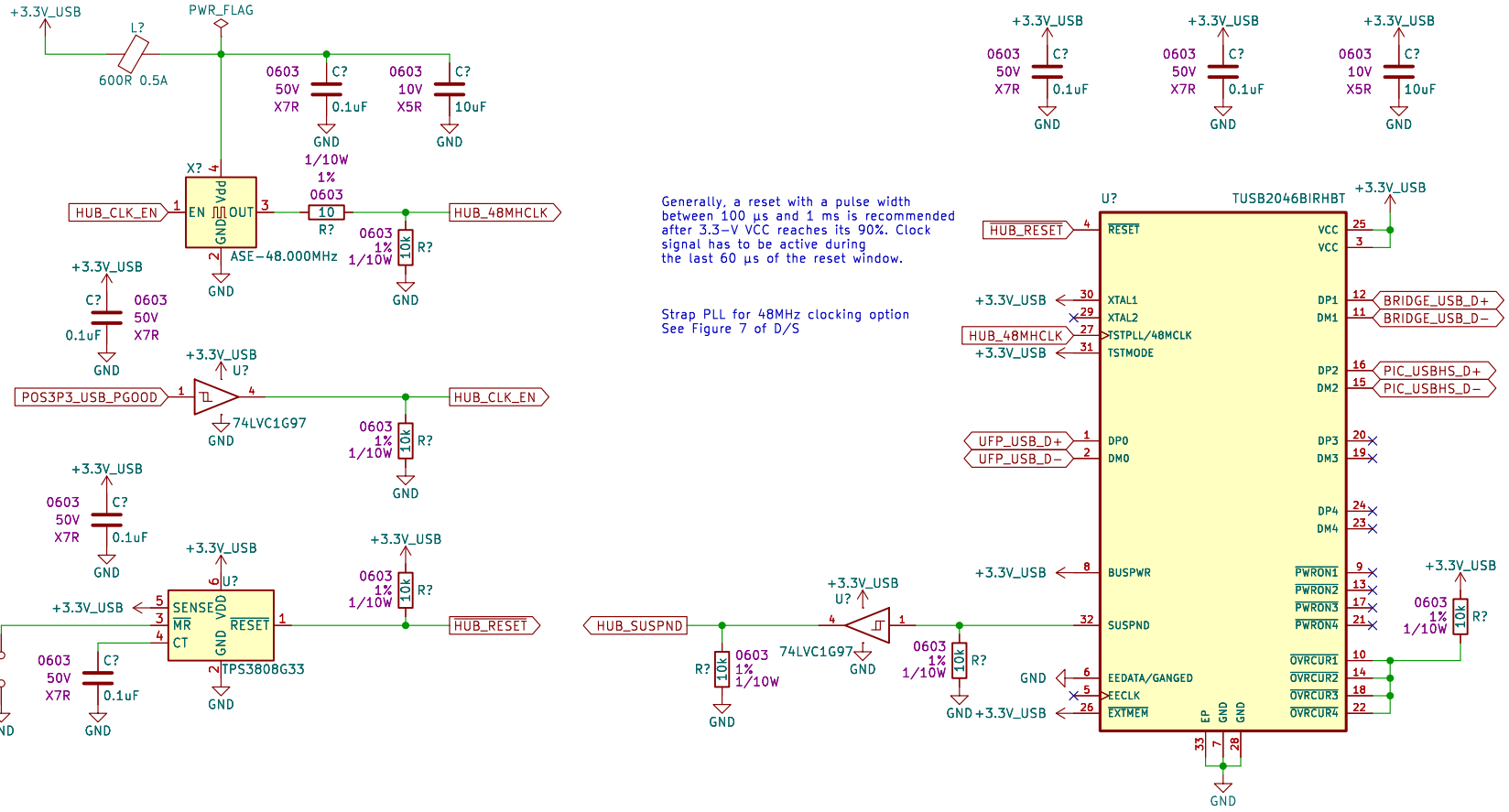

Drew Maatman and Michael Laffin	
Sheet: /USB Hub/	
File: USB_Hub.kicad_sch	
Title: Thermal Camera	
Size: A	Date: 2023-12-07
KiCad E.D.A. 8.0.1-rc1	Rev: PRELIM
	Id: 25/29

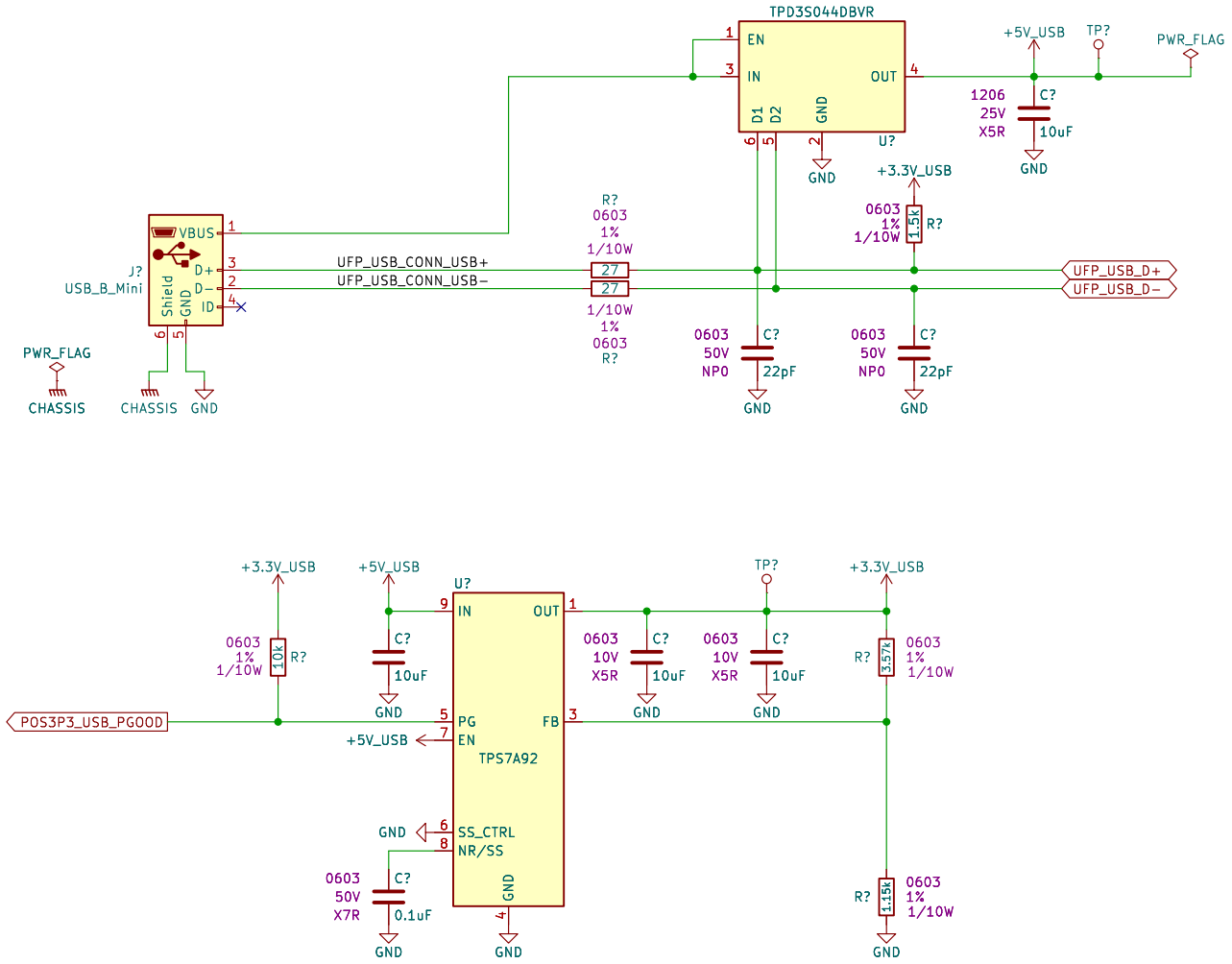

Drew Maatman and Michael Laffin		
Sheet: /Upstream USB Port/		
File: Upstream_USB_Port.kicad_sch		
Title: Thermal Camera		
Size: A	Date: 2023-12-07	**Rev: PRELIM**
KiCad E.D.A. 8.0.1-rc1		Id: 26/29

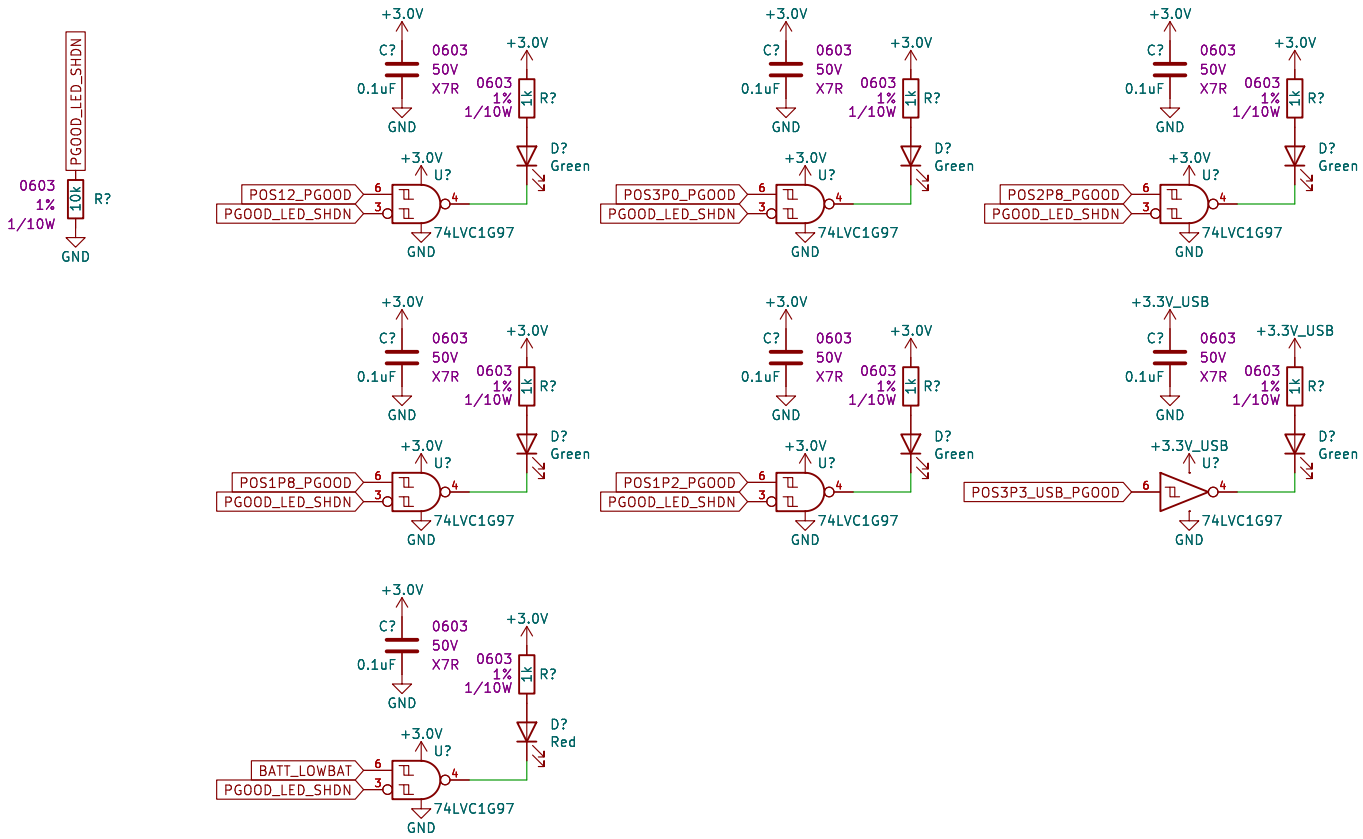

Drew Maatman and Michael Laffin		
Sheet: /PGOOD LEDs/		
File: PGOOD_LEDs.kicad_sch		
Title: Thermal Camera		
Size: A	Date: 2023-12-07	**Rev: PRELIM**
KiCad E.D.A. 8.0.1-rc1		Id: 27/29

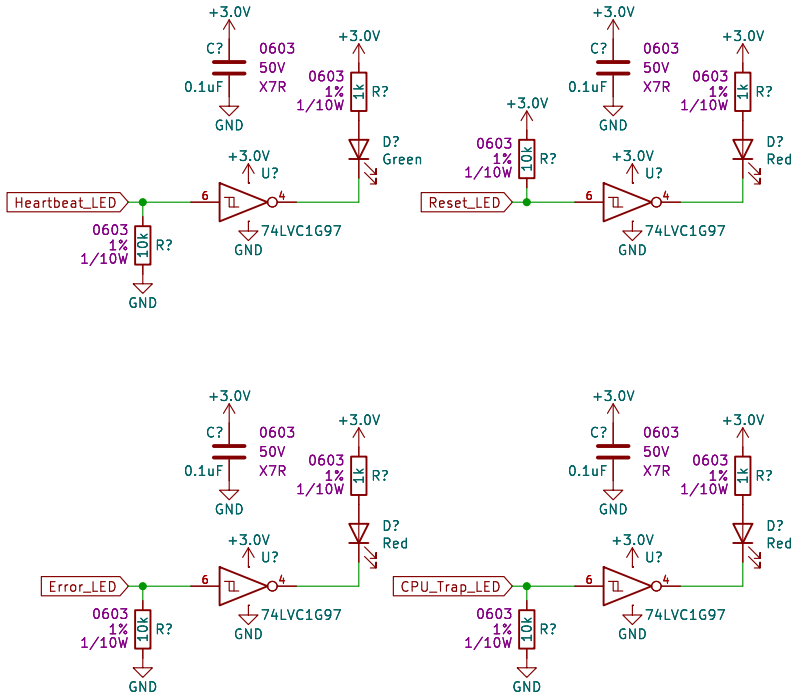

Drew Maatman and Michael Laffin

Sheet: /Status LEDs/
File: Status_LEDs.kicad_sch

Title: Thermal Camera

Size: A	Date: 2023-12-07	**Rev: PRELIM**
KiCad E.D.A. 8.0.1-rc1		Id: 28/29

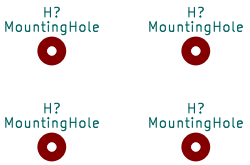

Drew Maatman and Michael Laffin

Sheet: /Mechanical/
File: Mechanical.kicad_sch

Title: Thermal Camera

Size: A	Date: 2023-12-07	**Rev: PRELIM**
KiCad E.D.A. 8.0.1-rc1		Id: 29/29