Thermal Camera

https://github.com/drewsum/Thermal_Camera

01. Table of Contents

02. POS12 Input — POS12_Input

03. POS12 Telemetry — POS12 Telemetry

04. POS3P0 Power Supply — POS3P0 Power Supply

05. POS3P0 Telemetry — POS3P0 Telemetry

06. POS1P8 Power Supply — POS1P8 Power Supply

07. POS1P8 Telemetry — POS1P8 Telemetry

08. POS2P8 Power Supply — POS2P8 Power Supply

09. POS2P8 Telemetry — POS2P8 Telemetry

10. POS1P2 Power Supply — POS1P2 Power Supply

11. POS1P2 Telemetry — POS1P2 Telemetry

12. LCD Backlight Power Supply — LCD Backlight Power Supply

13. LCD Backlight Telemetry — LCD Backlight Telemetry

14. Battery Management — Battery Management

15. PIC32MZ DA Programming — PIC32MZ DA Programming

16. PIC32MZ DA Clocking — PIC32MZ DA Clocking

17. PIC32MZ DA Power — PIC32MZ DA Power

18. PIC32MZ DA 1 — PIC32MZ DA 1

19. PIC32MZ DA 2 — PIC32MZ DA 2

20. External Storage — External Storage

21. Graphic LCD — Graphic LCD

22. USB UART — USB UART

23. Elapsed Time Counter — Elapsed Time Counter

24. FLIR Lepton Sensor — FLIR Lepton Sensor

25. USB Hub — USB Hub

26. Upstream USB Port — Upstream USB Port

27. PGOOD LEDs — PGOOD LEDs

28. Status LEDs — Status LEDs

29. Capacitive Touch — Capacitive Touch

30. Mechanical — Mechanical

31. Stitching Caps — Stitching Caps

Drew Maatman and Michael Laffin

Sheet: /

File: Thermal_Camera.kicad_sch

Title: Thermal Camera

Size: A	Date: 2024-09-20	Rev: A
KiCad E.D.A. 8.0.5		Id: 1/31

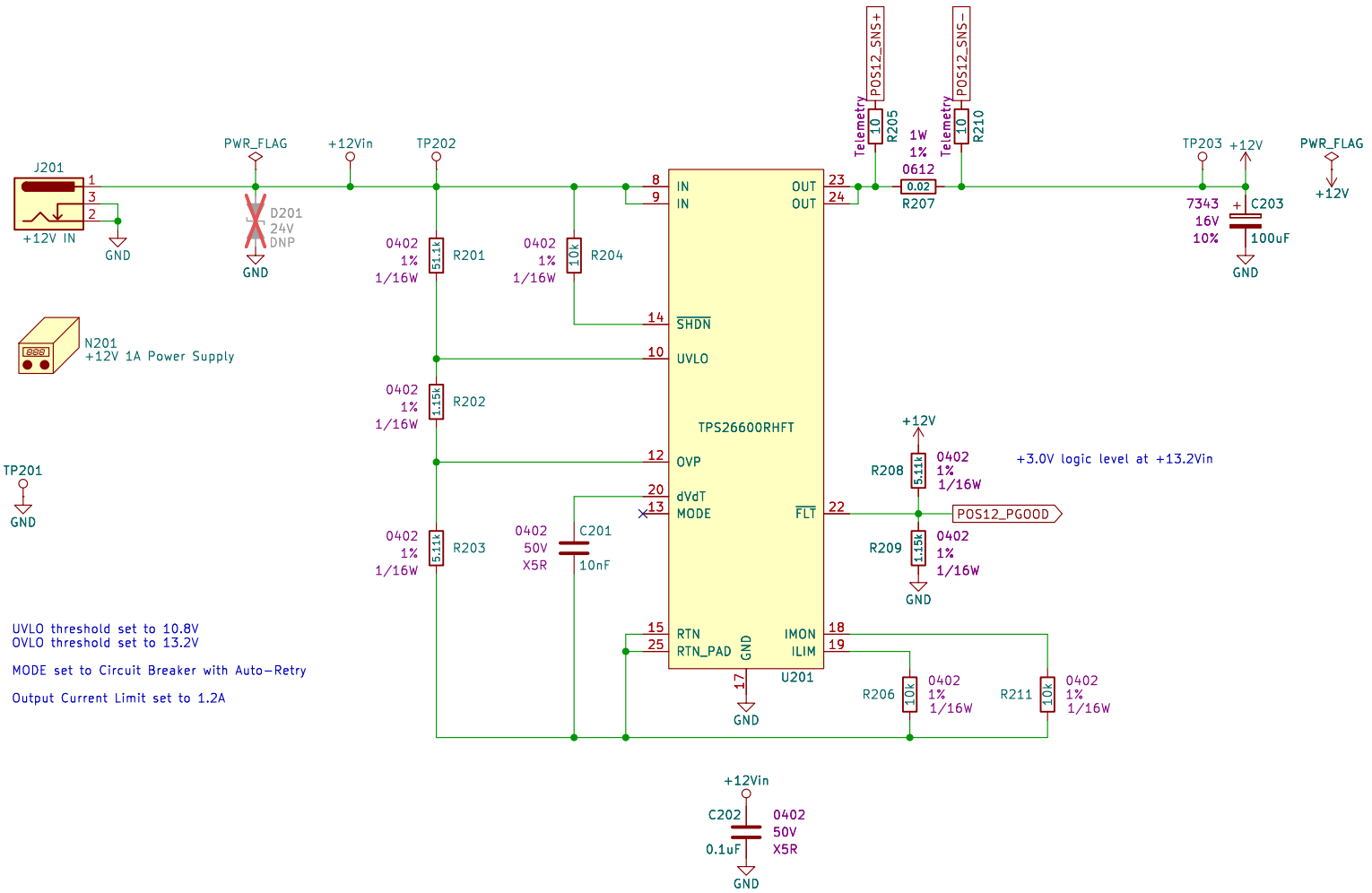

Drew Maatman and Michael Laffin

Sheet: /POS12_Input/

File: POS12_Input.kicad_sch

Title: Thermal Camera

Size: A	Date: 2024−09−20	**Rev: A**
KiCad E.D.A. 8.0.5		Id: 2/31

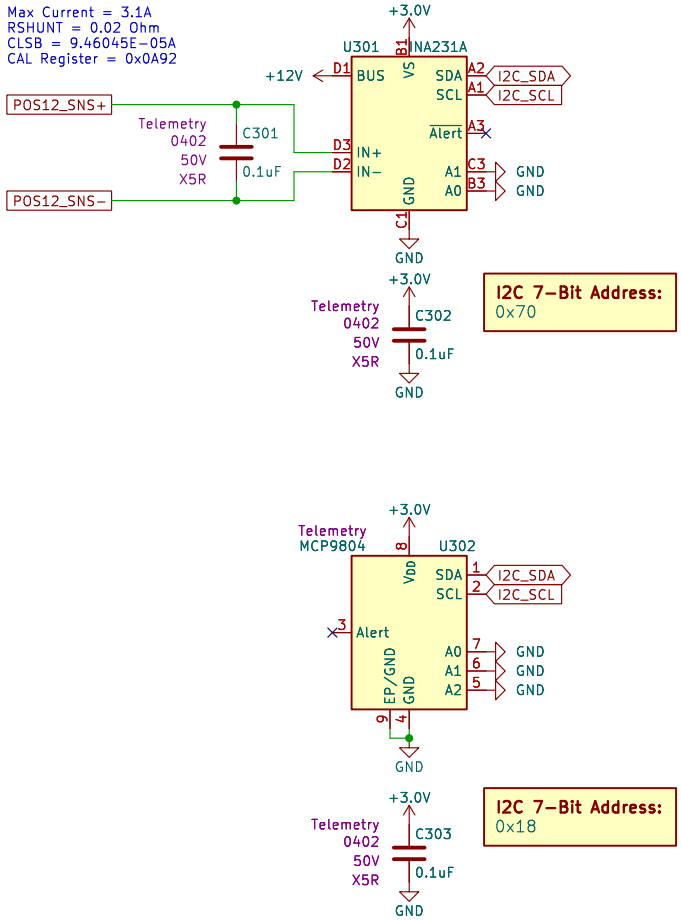

Drew Maatman and Michael Laffin

Sheet: /POS12 Telemetry/

File: POS12_Telemetry.kicad_sch

Title: Thermal Camera

Size: A	Date: 2024-09-20	**Rev: A**
KiCad E.D.A. 8.0.5		Id: 3/31

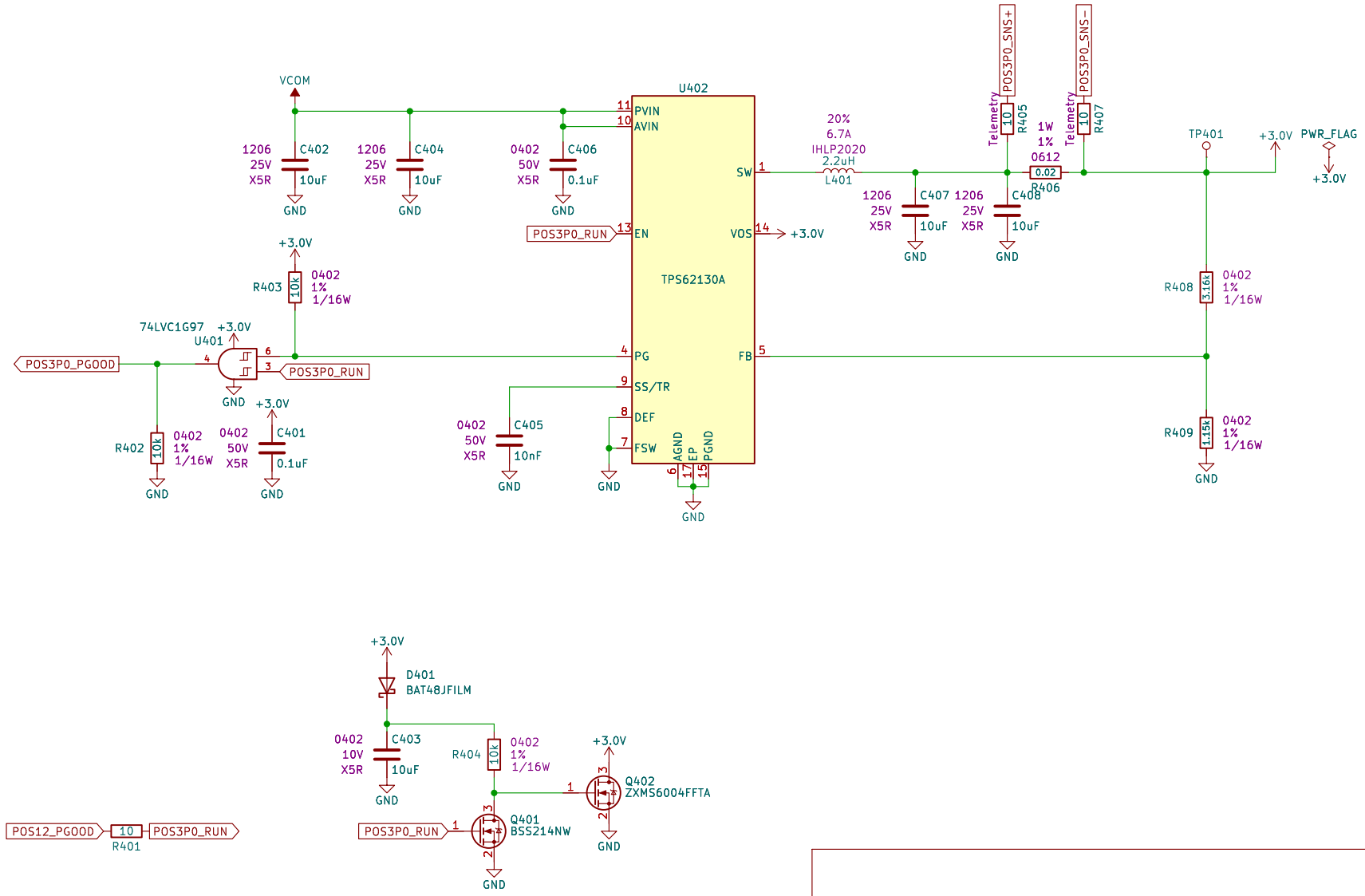

Drew Maatman and Michael Laffin

Sheet: /POS3P0 Power Supply/

File: POS3P0_Power_Supply.kicad_sch

Title: Thermal Camera

Size: A	Date: 2024-09-20	**Rev: A**
KiCad E.D.A. 8.0.5		Id: 4/31

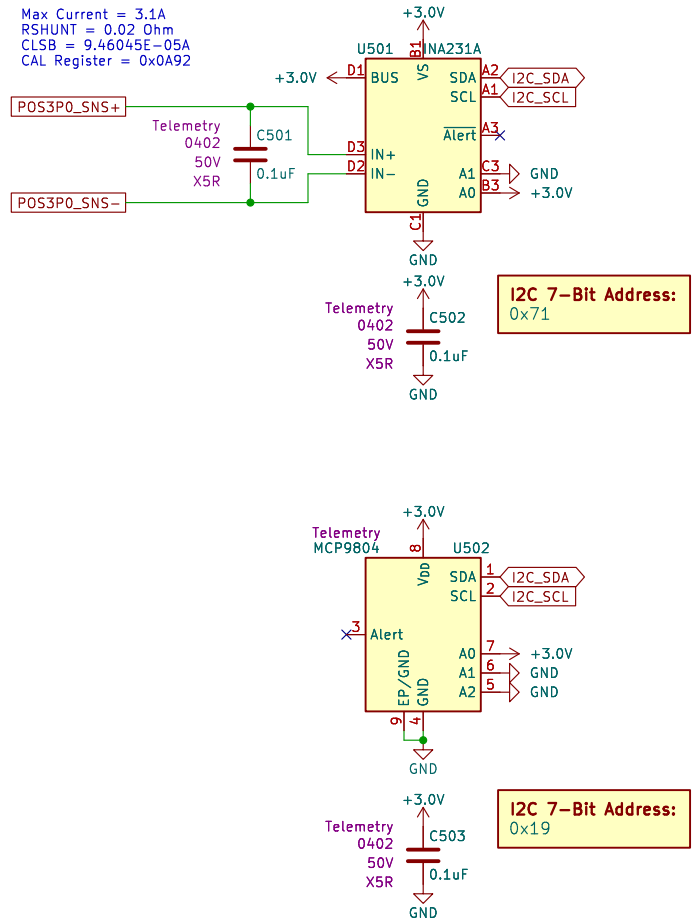

Drew Maatman and Michael Laffin

Sheet: /POS3P0 Telemetry/
File: POS3P0_Telemetry.kicad_sch

Title: Thermal Camera

Size: A	Date: 2024-09-20	**Rev: A**
KiCad E.D.A. 8.0.5		Id: 5/31

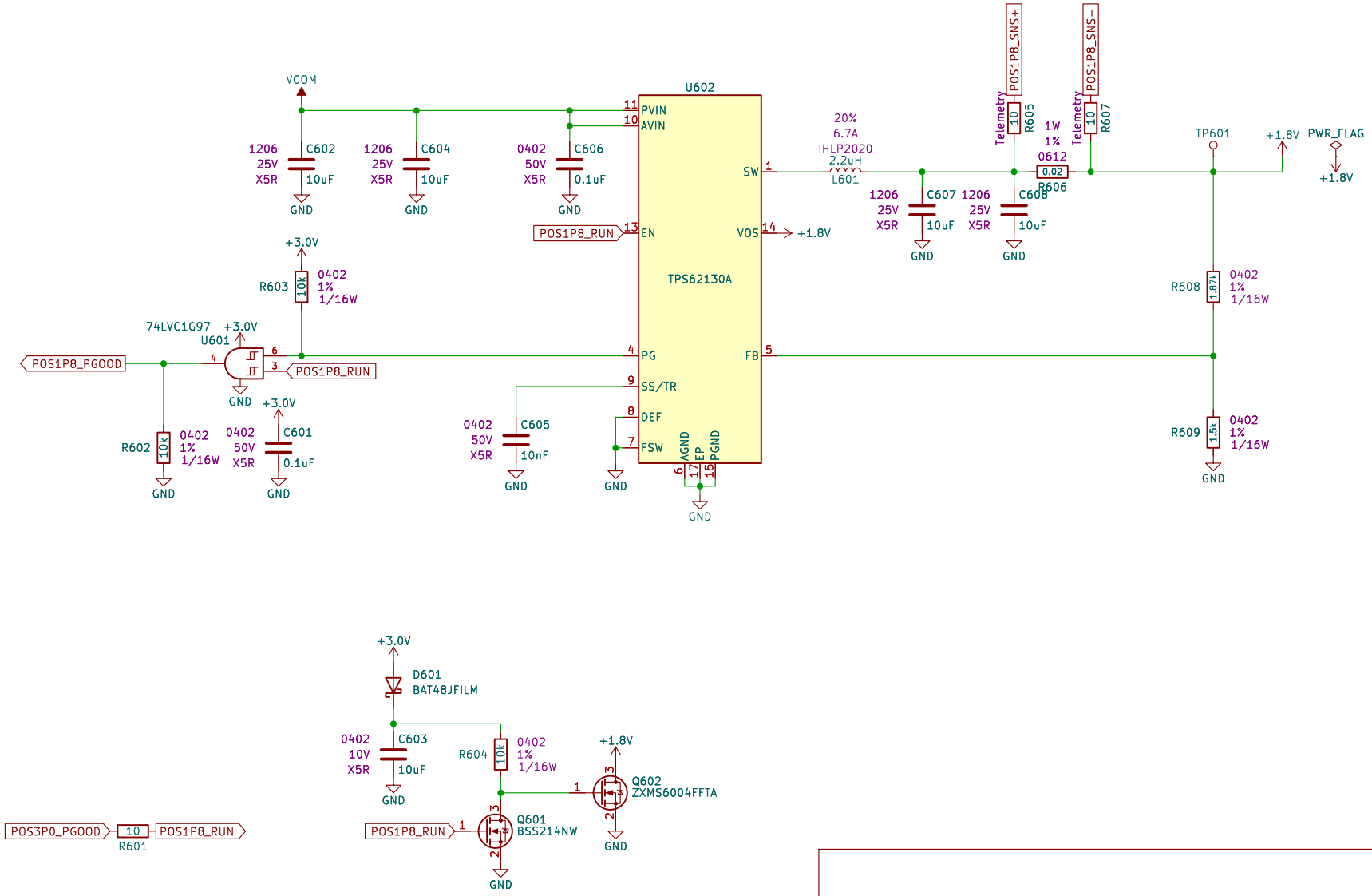

Drew Maatman and Michael Laffin

Sheet: /POS1P8 Power Supply/

File: POS1P8_Power_Supply.kicad_sch

Title: Thermal Camera

Size: A	Date: 2024-09-20	**Rev: A**
KiCad E.D.A. 8.0.5		Id: 6/31

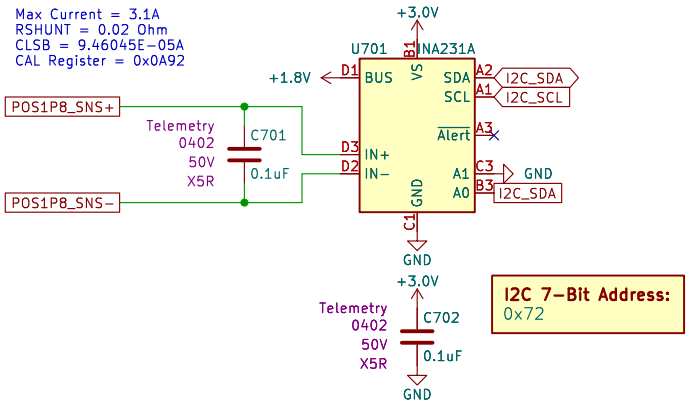

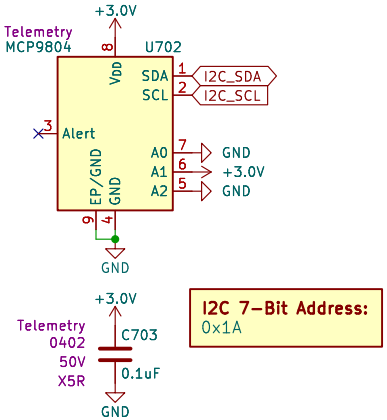

Drew Maatman and Michael Laffin

Sheet: /POS1P8 Telemetry/
File: POS1P8_Telemetry.kicad_sch

Title: Thermal Camera

Size: A	Date: 2024-09-20	**Rev: A**
KiCad E.D.A. 8.0.5		Id: 7/31

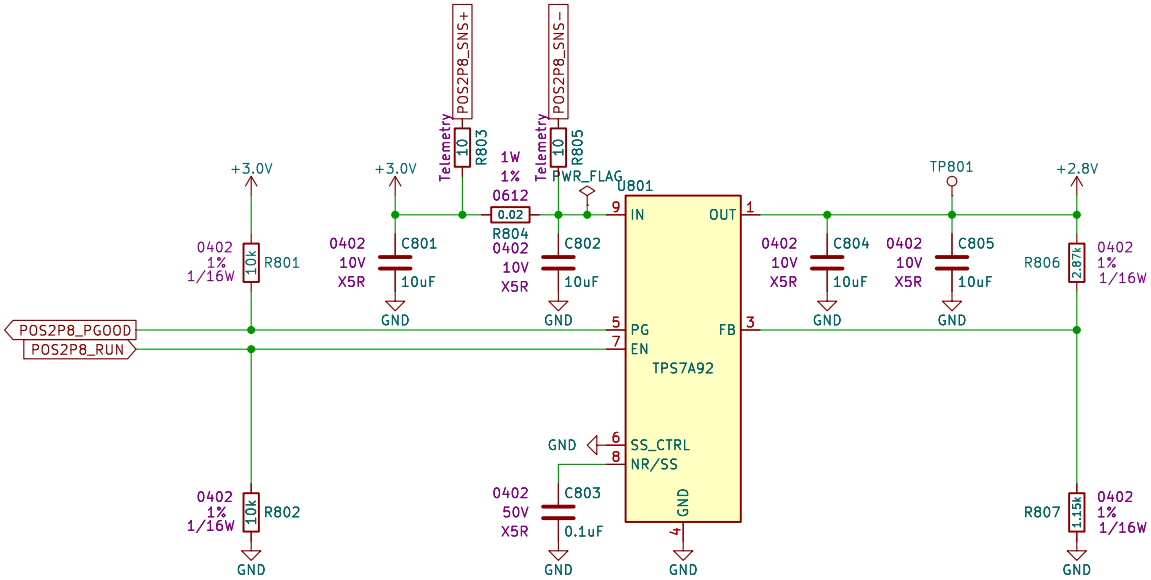

Drew Maatman and Michael Laffin

Sheet: /POS2P8 Power Supply/

File: POS2P8_Power_Supply.kicad_sch

Title: Thermal Camera

Size: A	Date: 2024-09-20	**Rev: A**
KiCad E.D.A. 8.0.5		Id: 8/31

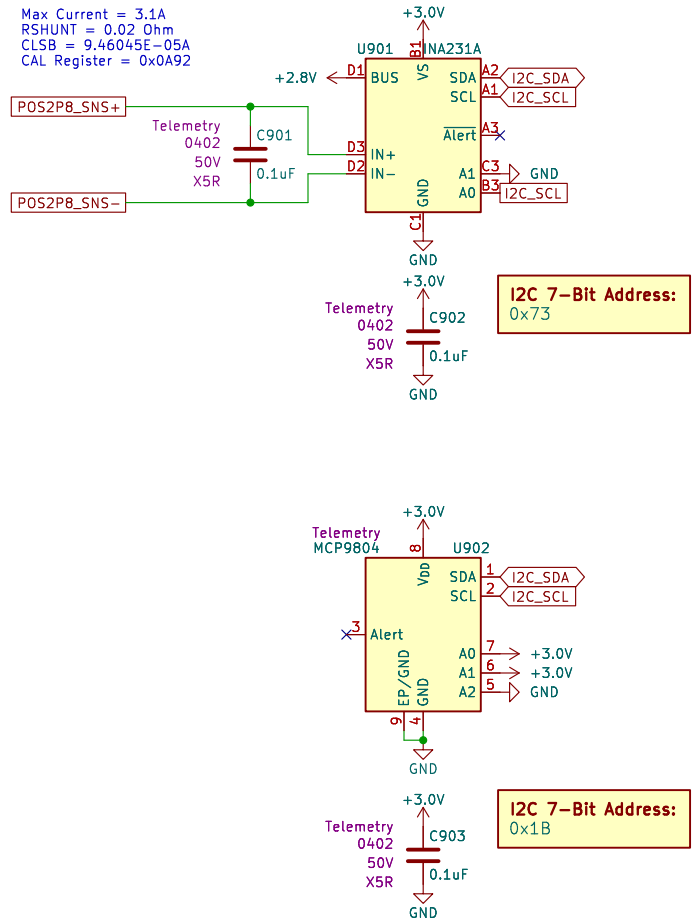

Drew Maatman and Michael Laffin

Sheet: /POS2P8 Telemetry/

File: POS2P8_Telemetry.kicad_sch

Title: Thermal Camera

Size: A	Date: 2024-09-20	**Rev: A**
KiCad E.D.A. 8.0.5		Id: 9/31

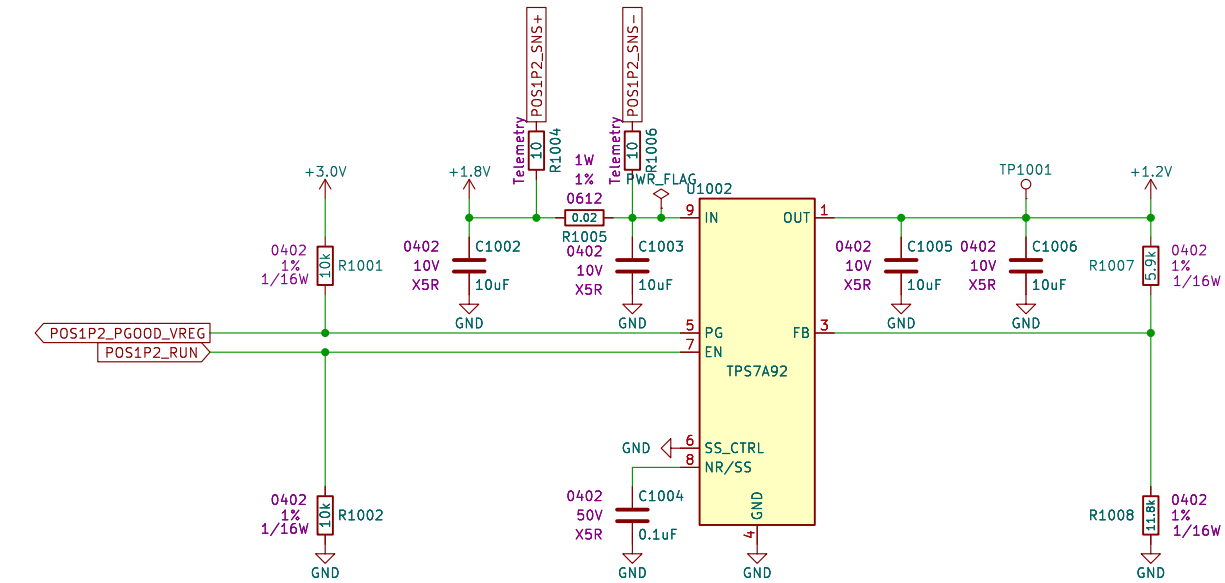

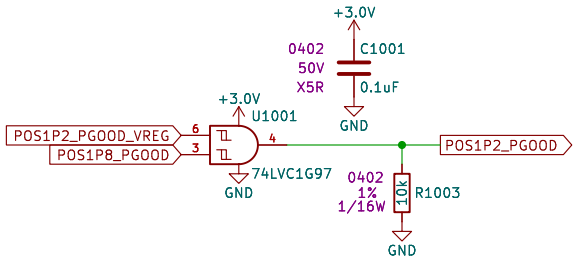

Drew Maatman and Michael Laffin

Sheet: /POS1P2 Power Supply/
File: POS1P2_Power_Supply.kicad_sch

Title: Thermal Camera

Size: A	Date: 2024-09-20	**Rev: A**
KiCad E.D.A. 8.0.5		Id: 10/31

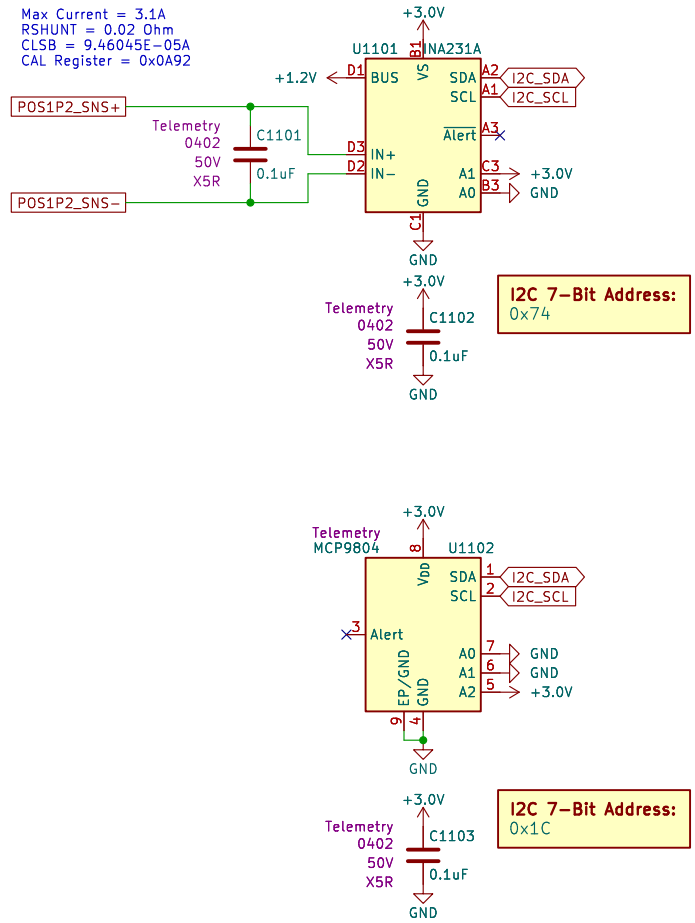

Drew Maatman and Michael Laffin

Sheet: /POS1P2 Telemetry/
File: POS1P2_Telemetry.kicad_sch

Title: Thermal Camera

Size: A	Date: 2024-09-20	**Rev: A**
KiCad E.D.A. 8.0.5		Id: 11/31

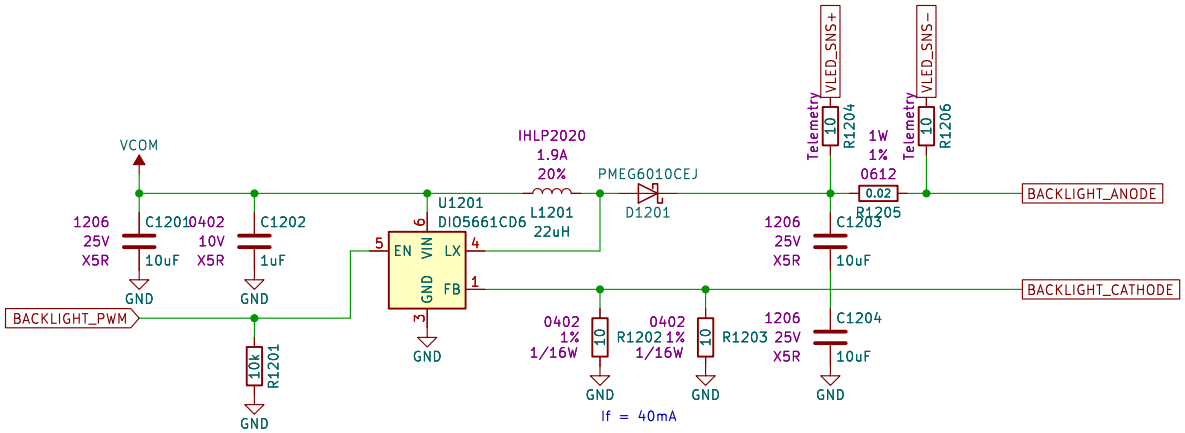

Drew Maatman and Michael Laffin

Sheet: /LCD Backlight Power Supply/
File: LCD_Backlight_Power_Supply.kicad_sch

Title: Thermal Camera

Size: A	Date: 2024-09-20	**Rev: A**
KiCad E.D.A. 8.0.5		Id: 12/31

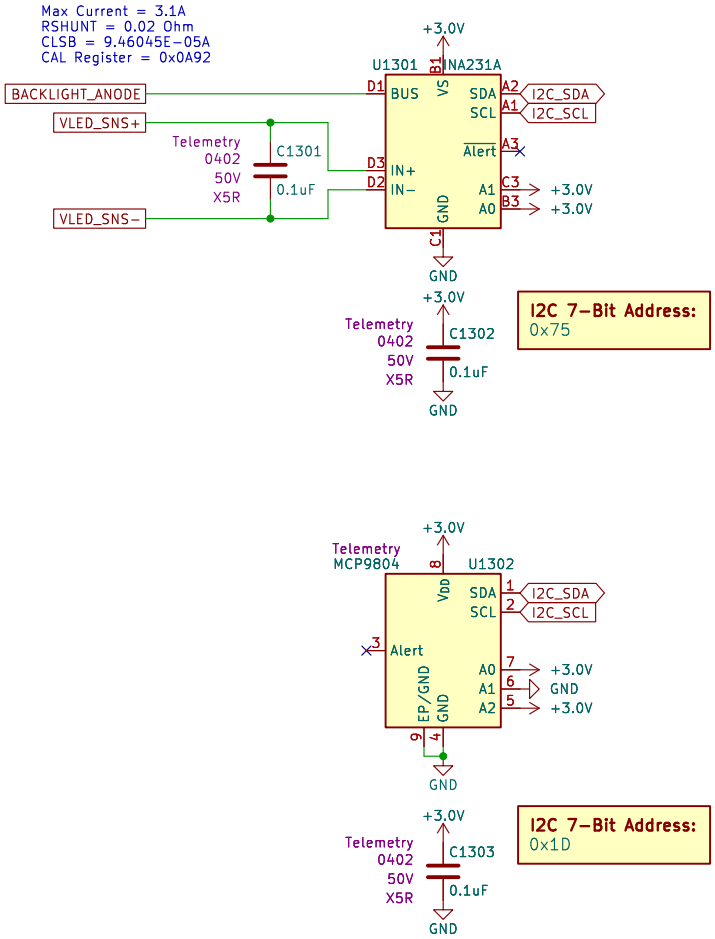

Drew Maatman and Michael Laffin

Sheet: /LCD Backlight Telemetry/
File: LCD_Backlight_Telemetry.kicad_sch

Title: Thermal Camera

Size: A	Date: 2024-09-20	**Rev: A**
KiCad E.D.A. 8.0.5		Id: 13/31

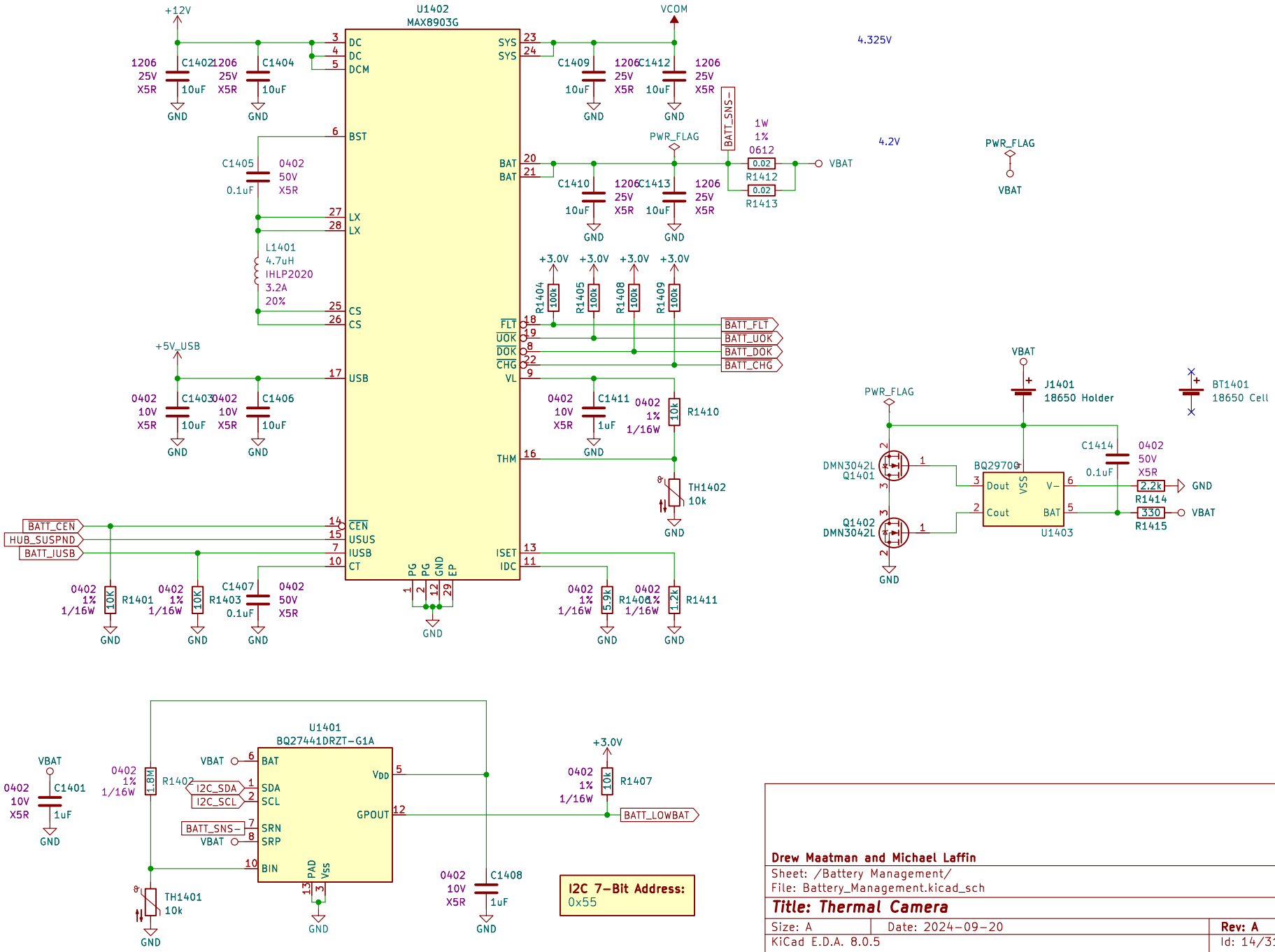

Drew Maatman and Michael Laffin

Sheet: /Battery Management/

File: Battery_Management.kicad_sch

Title: Thermal Camera

Size: A	Date: 2024-09-20	Rev: A
KiCad E.D.A. 8.0.5		Id: 14/31

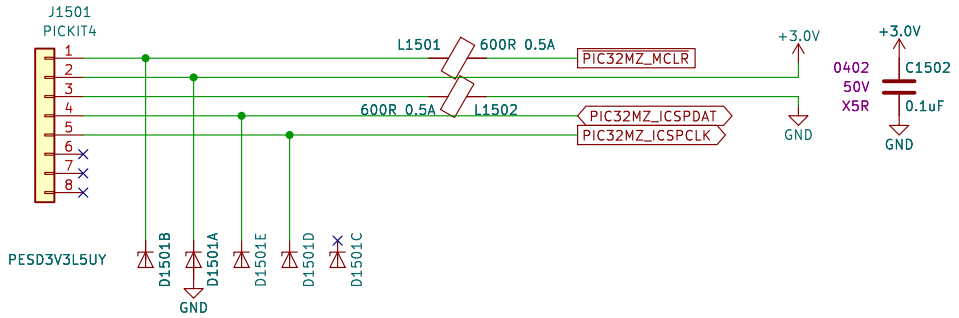

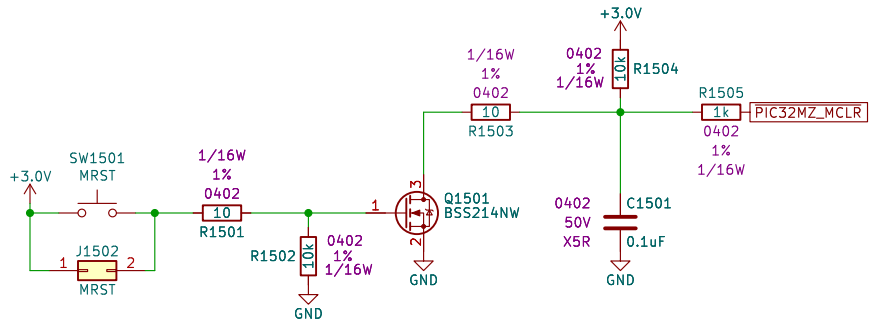

Drew Maatman and Michael Laffin

Sheet: /PIC32MZ DA Programming/
File: PIC32MZ_DA_Programming.kicad_sch

Title: Thermal Camera

Size: A	Date: 2024-09-20	**Rev: A**
KiCad E.D.A. 8.0.5		Id: 15/31

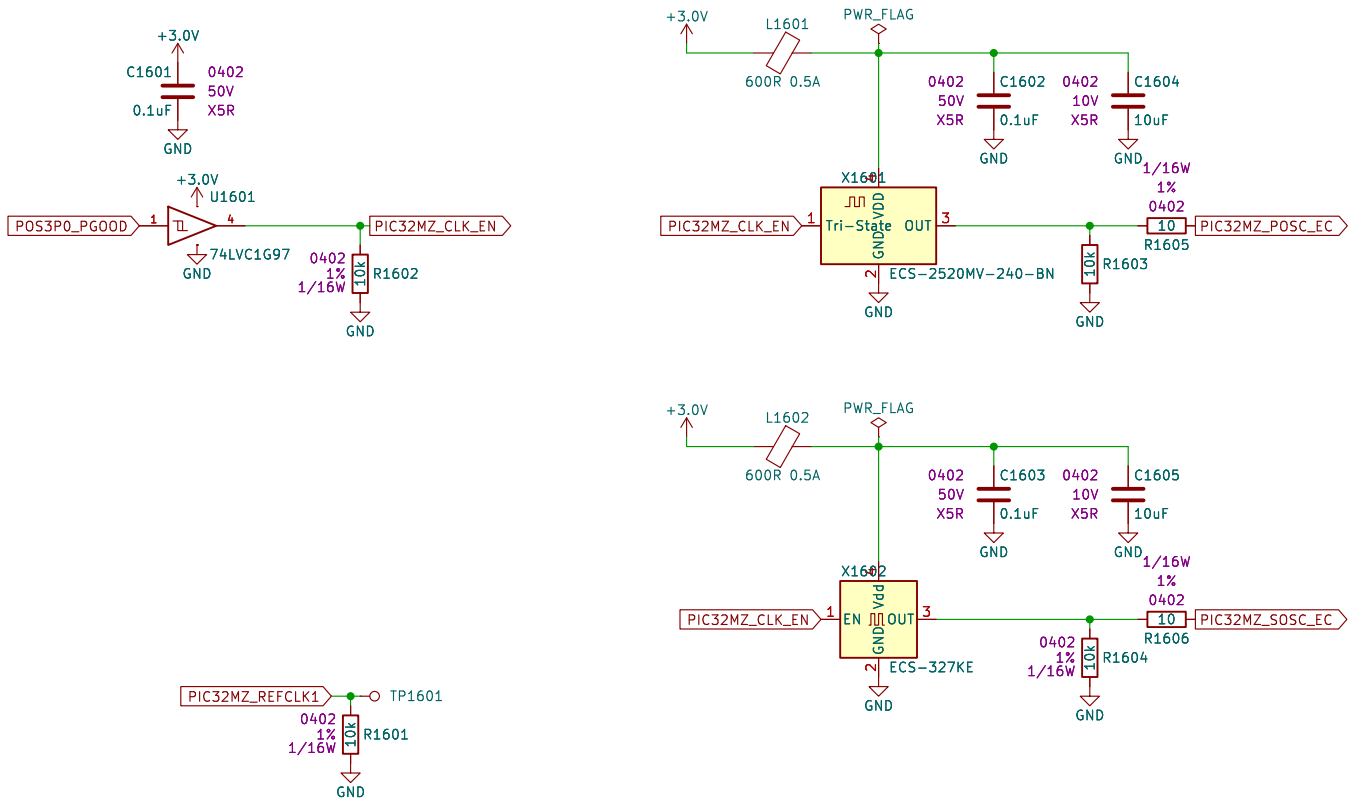

Drew Maatman and Michael Laffin

Sheet: /PIC32MZ DA Clocking/

File: PIC32MZ_DA_Clocking.kicad_sch

Title: Thermal Camera

Size: A	Date: 2024-09-20	**Rev: A**
KiCad E.D.A. 8.0.5		Id: 16/31

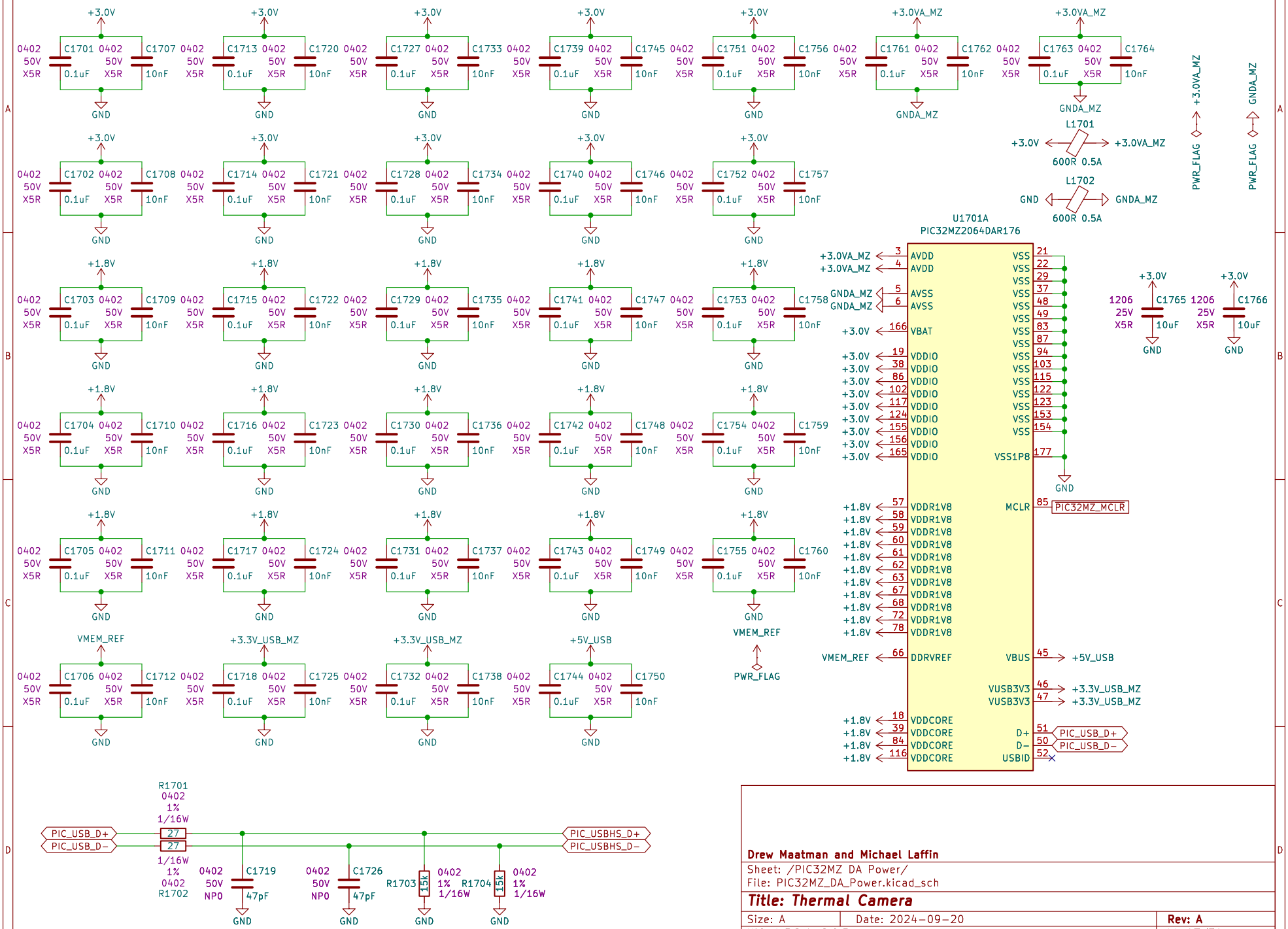
U1701A
PIC32MZ2064DAR176
L1701
600R 0.5A
L1702
600R 0.5A
PIC32MZ_MCLR
PIC_USB_D+
PIC_USB_D−
PIC_USBHS_D+
PIC_USBHS_D−
R1701
R1702
R1703
R1704
C1719
C1726
PWR_FLAG
Drew Maatman and Michael Laffin
Sheet: /PIC32MZ DA Power/
File: PIC32MZ_DA_Power.kicad_sch
Title: Thermal Camera
Size: A
Date: 2024-09-20
Rev: A
KiCad E.D.A. 8.0.5
Id: 17/31

See TABLE 36-1:RGB COLOR MAPPING for Graphic LCD Pin Mapping

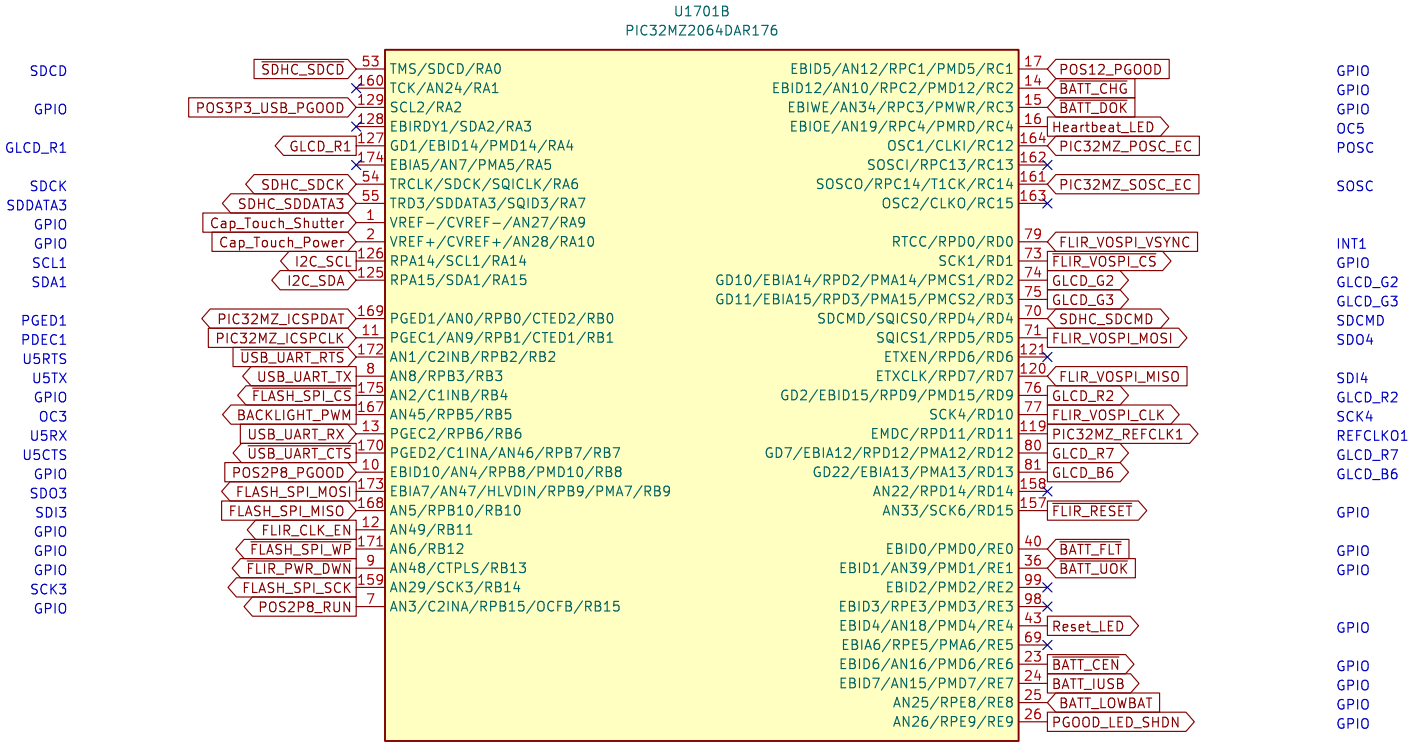

Drew Maatman and Michael Laffin

Sheet: /PIC32MZ DA 1/
File: PIC32MZ_DA_1.kicad_sch

Title: Thermal Camera

Size: A	Date: 2024-09-20	**Rev: A**
KiCad E.D.A. 8.0.5		Id: 18/31

See TABLE 36-1:RGB COLOR MAPPING for Graphic LCD Pin Mapping

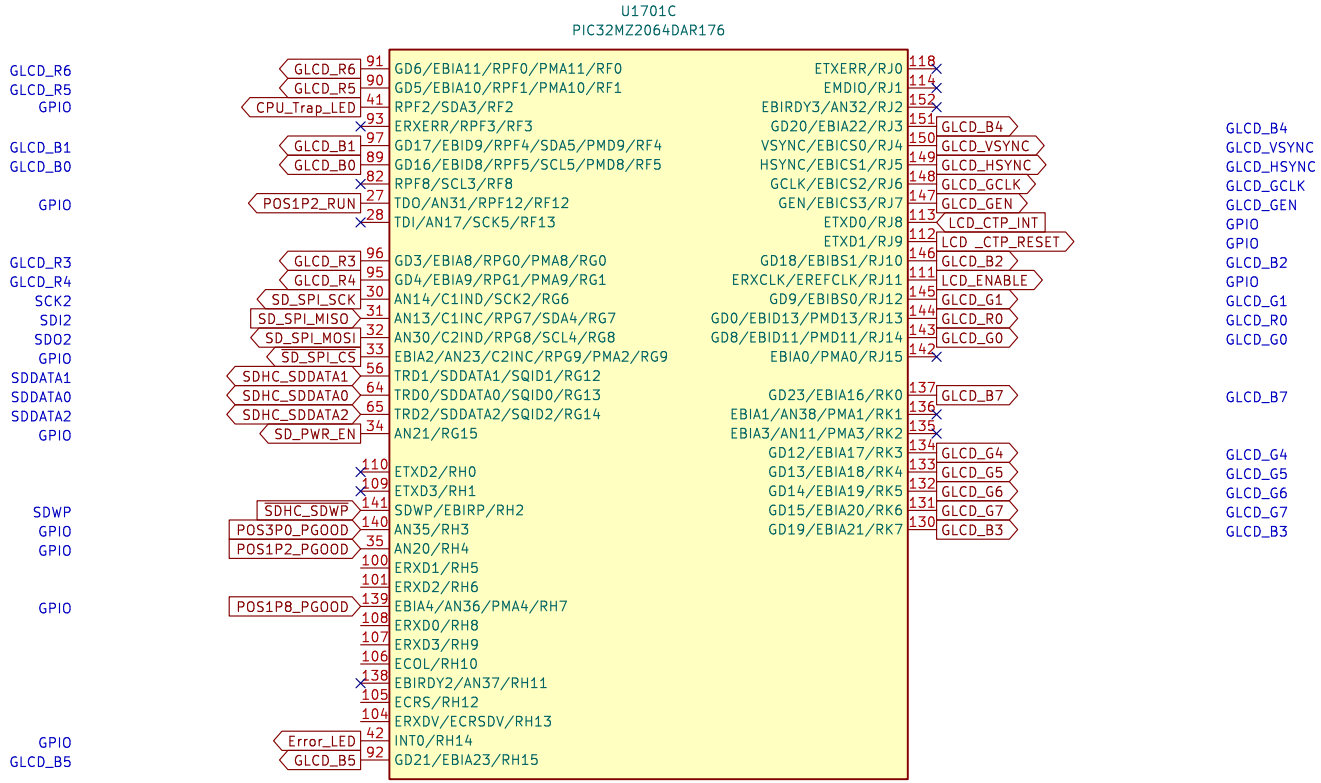

Drew Maatman and Michael Laffin

Sheet: /PIC32MZ DA 2/
File: PIC32MZ_DA_2.kicad_sch

Title: Thermal Camera

Size: A	Date: 2024-09-20	**Rev: A**
KiCad E.D.A. 8.0.5		Id: 19/31

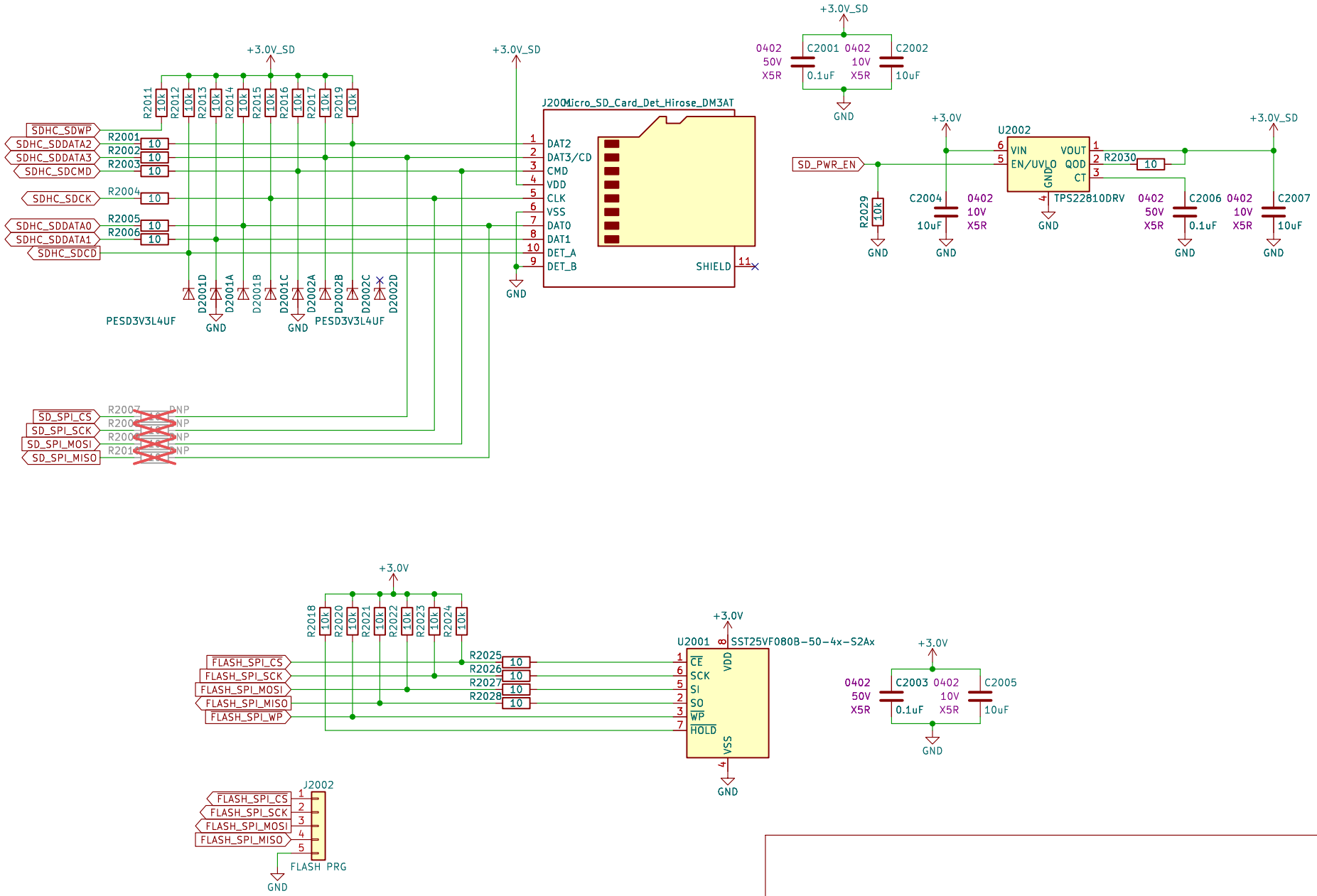

Drew Maatman and Michael Laffin

Sheet: /External Storage/

File: External_Storage.kicad_sch

Title: Thermal Camera

Size: A	Date: 2024-09-20	Rev: A
KiCad E.D.A. 8.0.5		Id: 20/31

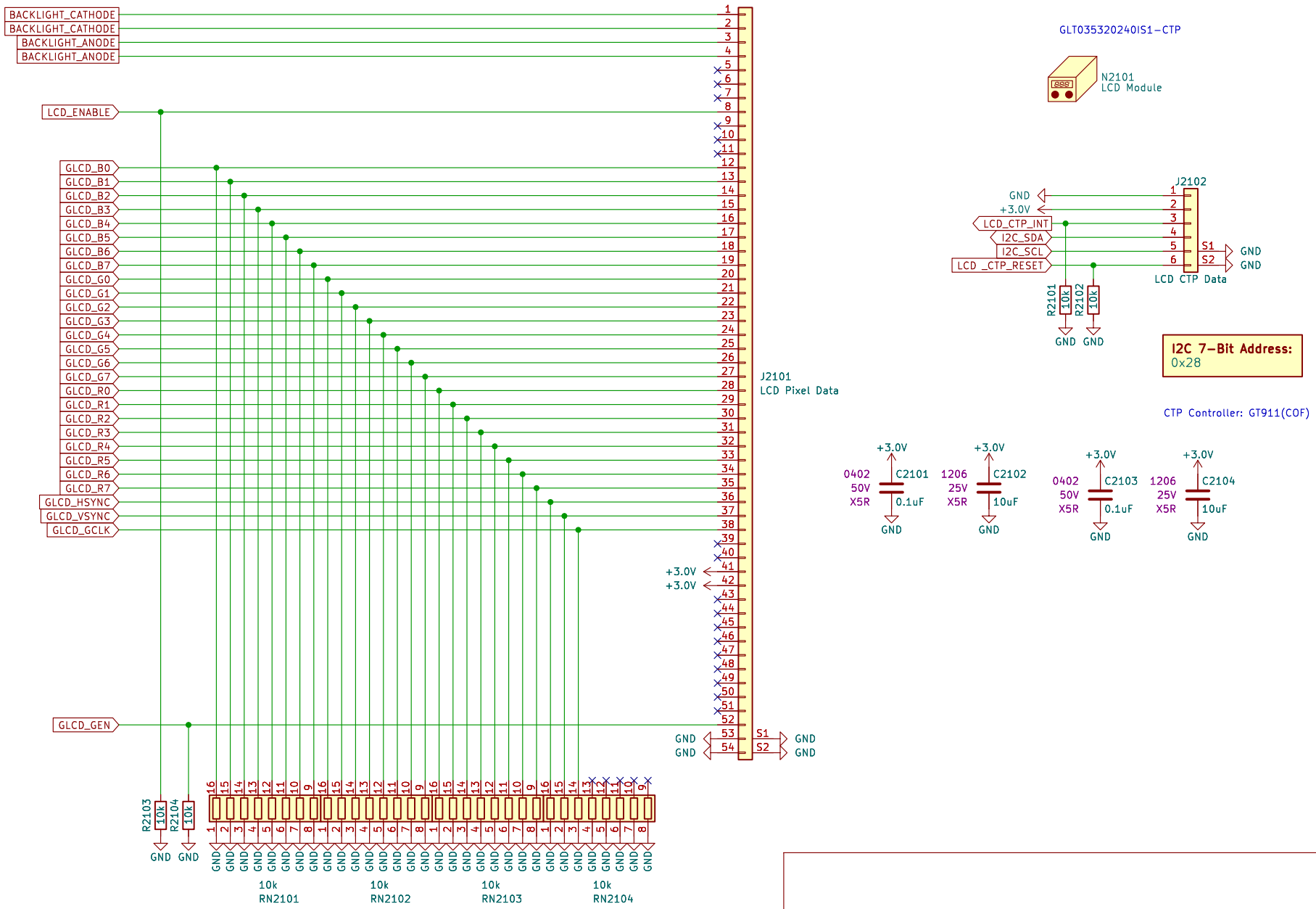

Drew Maatman and Michael Laffin

Sheet: /Graphic LCD/
File: Graphic_LCD.kicad_sch

Title: Thermal Camera

Size: A	Date: 2024-09-20	**Rev: A**
KiCad E.D.A. 8.0.5		Id: 21/31

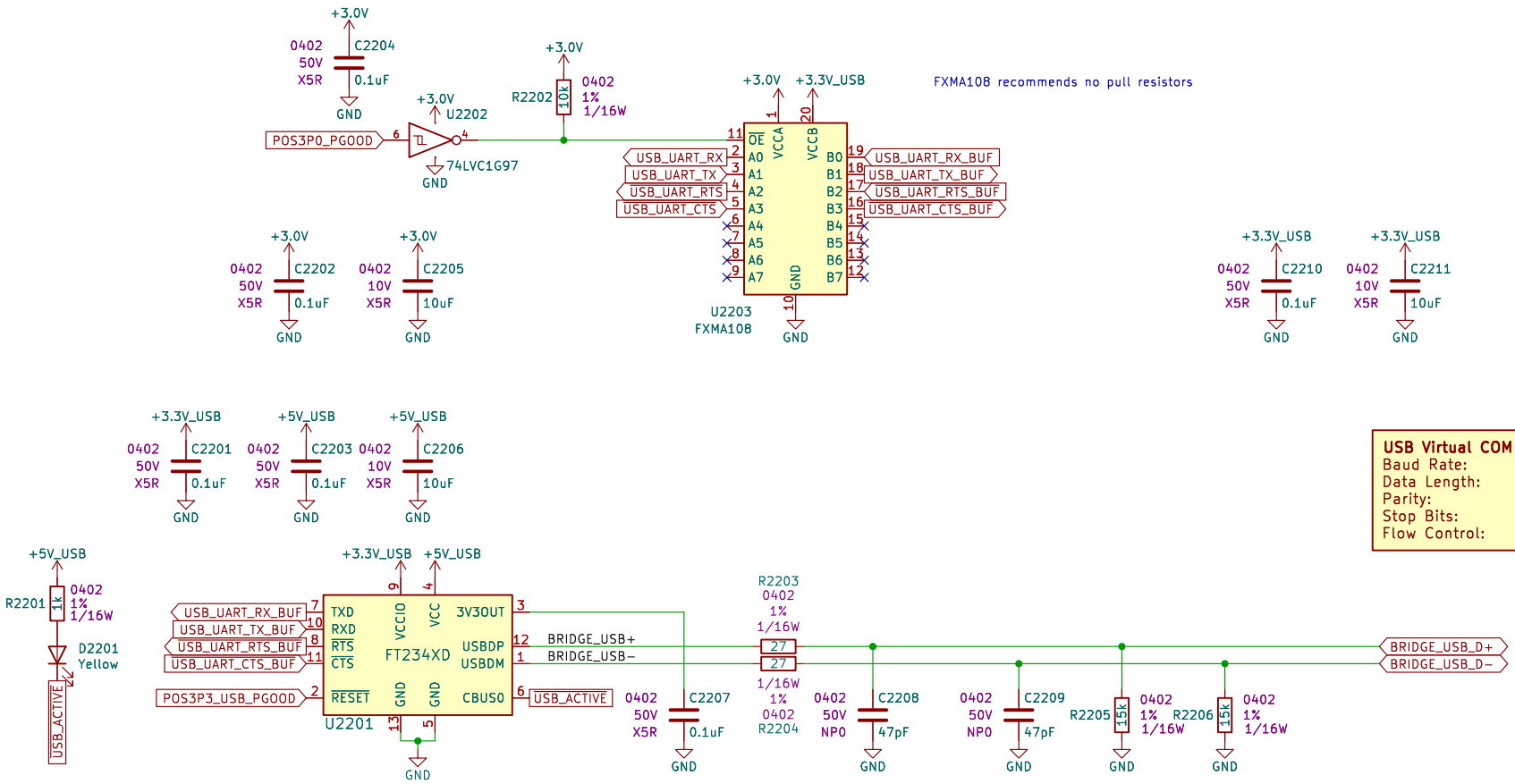

USB Virtual COM Port Settings:

Baud Rate:	115200 bps
Data Length:	8 bit
Parity:	None
Stop Bits:	1
Flow Control:	None

Drew Maatman and Michael Laffin

Sheet: /USB UART/
File: USB_UART.kicad_sch

Title: Thermal Camera

Size: A	Date: 2024-09-20	**Rev: A**
KiCad E.D.A. 8.0.5		Id: 22/31

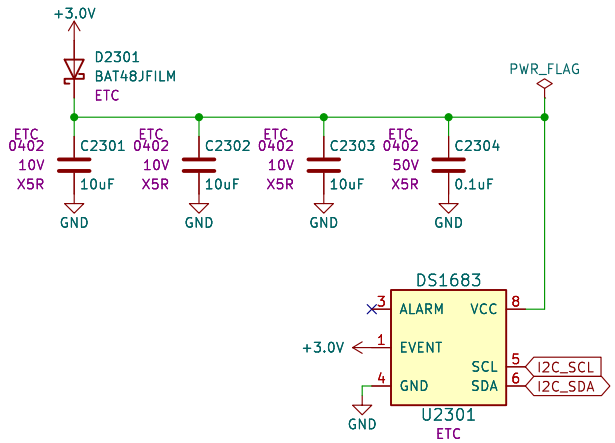

I2C 7-Bit Address:
0x6B

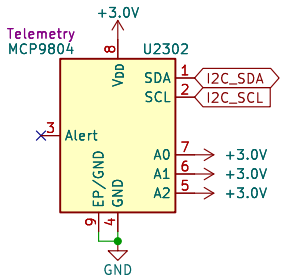

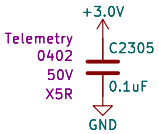

I2C 7-Bit Address:
0x1F

Ambient, place away from power components

Drew Maatman and Michael Laffin

Sheet: /Elapsed Time Counter/
File: Elapsed_Time_Counter.kicad_sch

Title: Thermal Camera

Size: A	Date: 2024-09-20	**Rev: A**
KiCad E.D.A. 8.0.5		Id: 23/31

Power Supply Considerations:
VDDC: 1.20V (1.14V min, 1.26V max), 50mVpp max ripple, 110mA max draw
VDD: 2.80V (2.72V min, 2.88V max), 30mVpp max ripple, 16mA max draw
VDDIO: 2.8V min, 3.1V max, 50mVpp max ripple, 310mA max draw

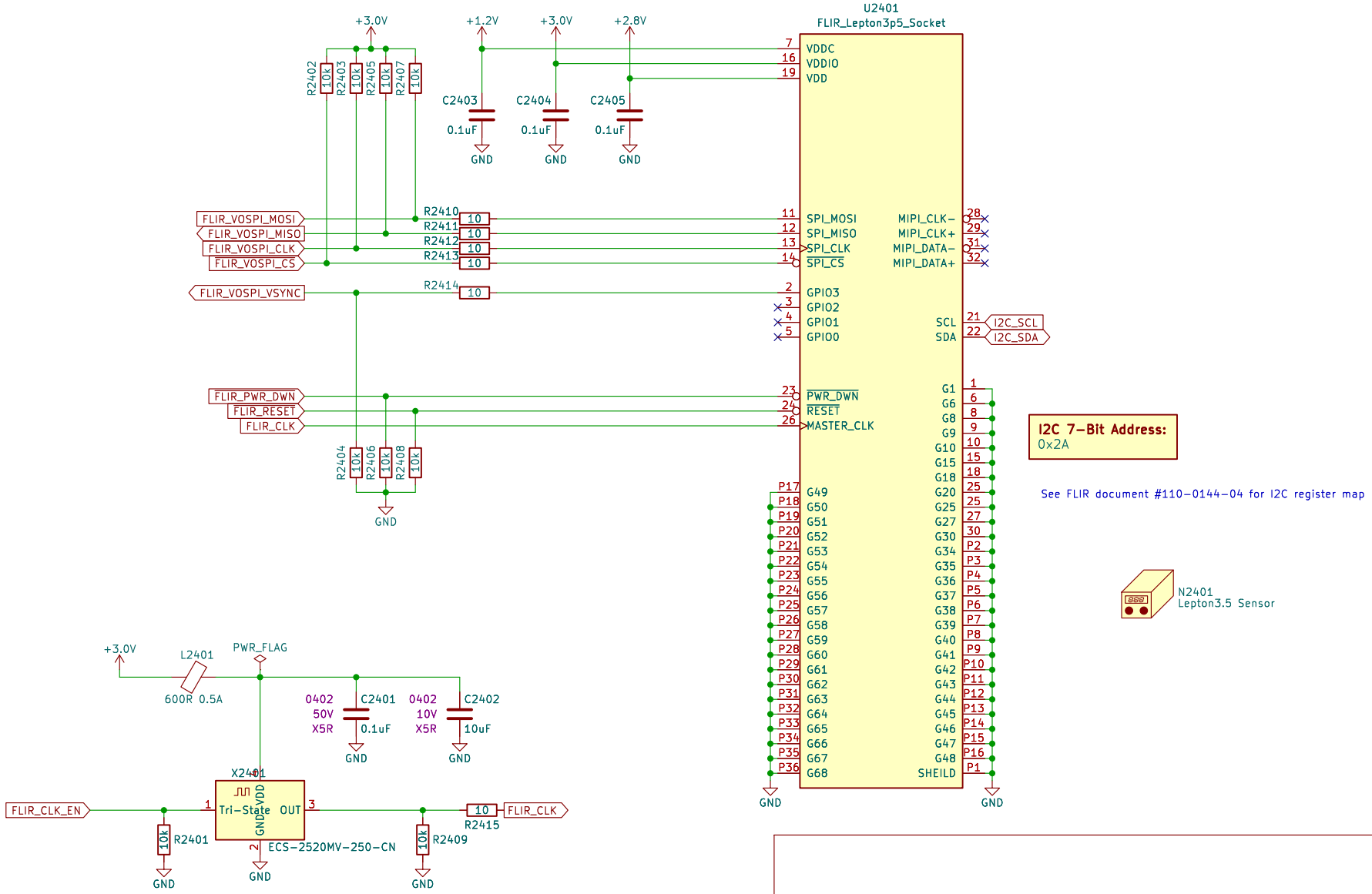

Drew Maatman and Michael Laffin
Sheet: /FLIR Lepton Sensor/
File: FLIR_Lepton_Sensor.kicad_sch

Title: Thermal Camera

Size: A	Date: 2024−09−20	Rev: A
KiCad E.D.A. 8.0.5		Id: 24/31

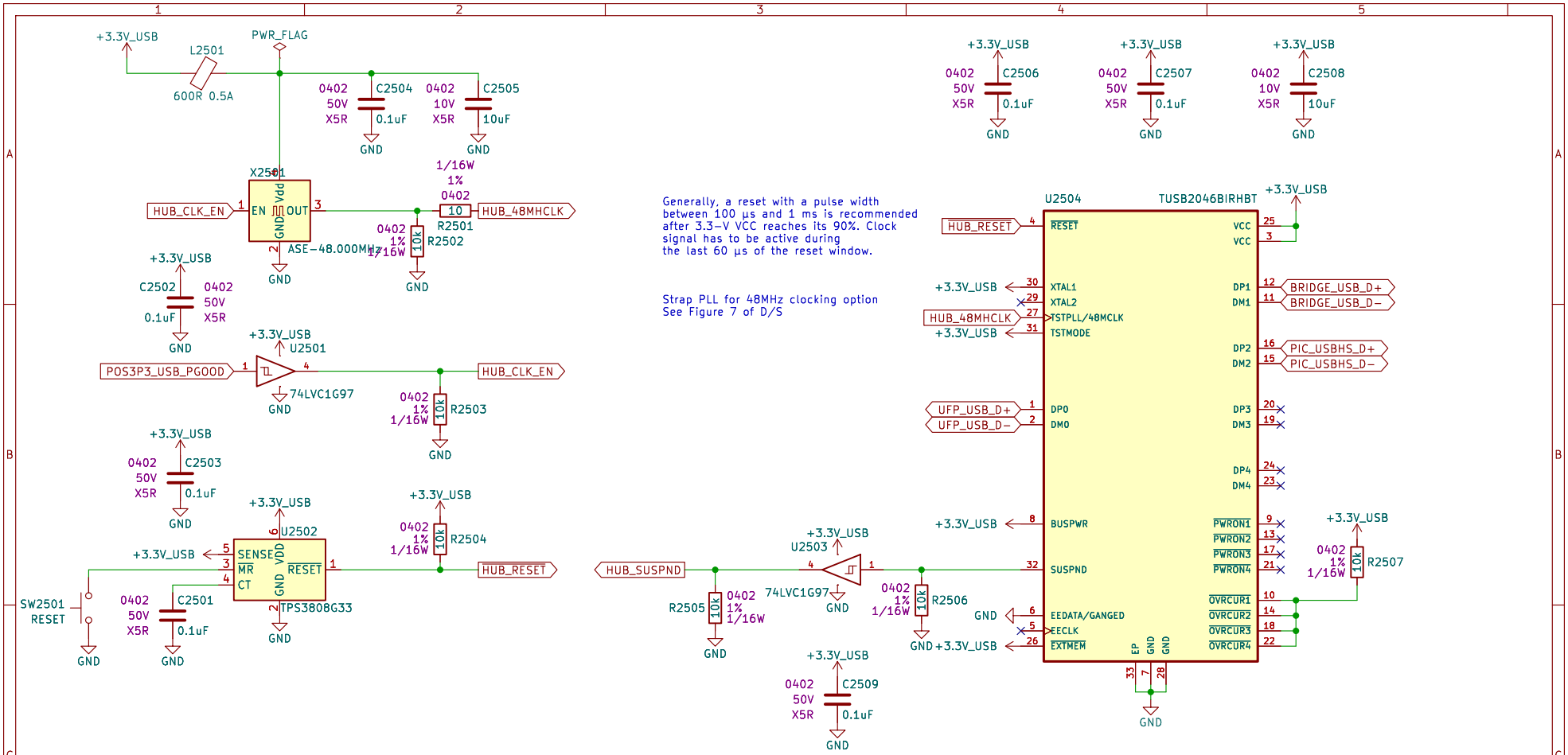

Drew Maatman and Michael Laffin

Sheet: /USB Hub/

File: USB_Hub.kicad_sch

Title: Thermal Camera

Size: A	Date: 2024-09-20	Rev: A
KiCad E.D.A. 8.0.5		Id: 25/31

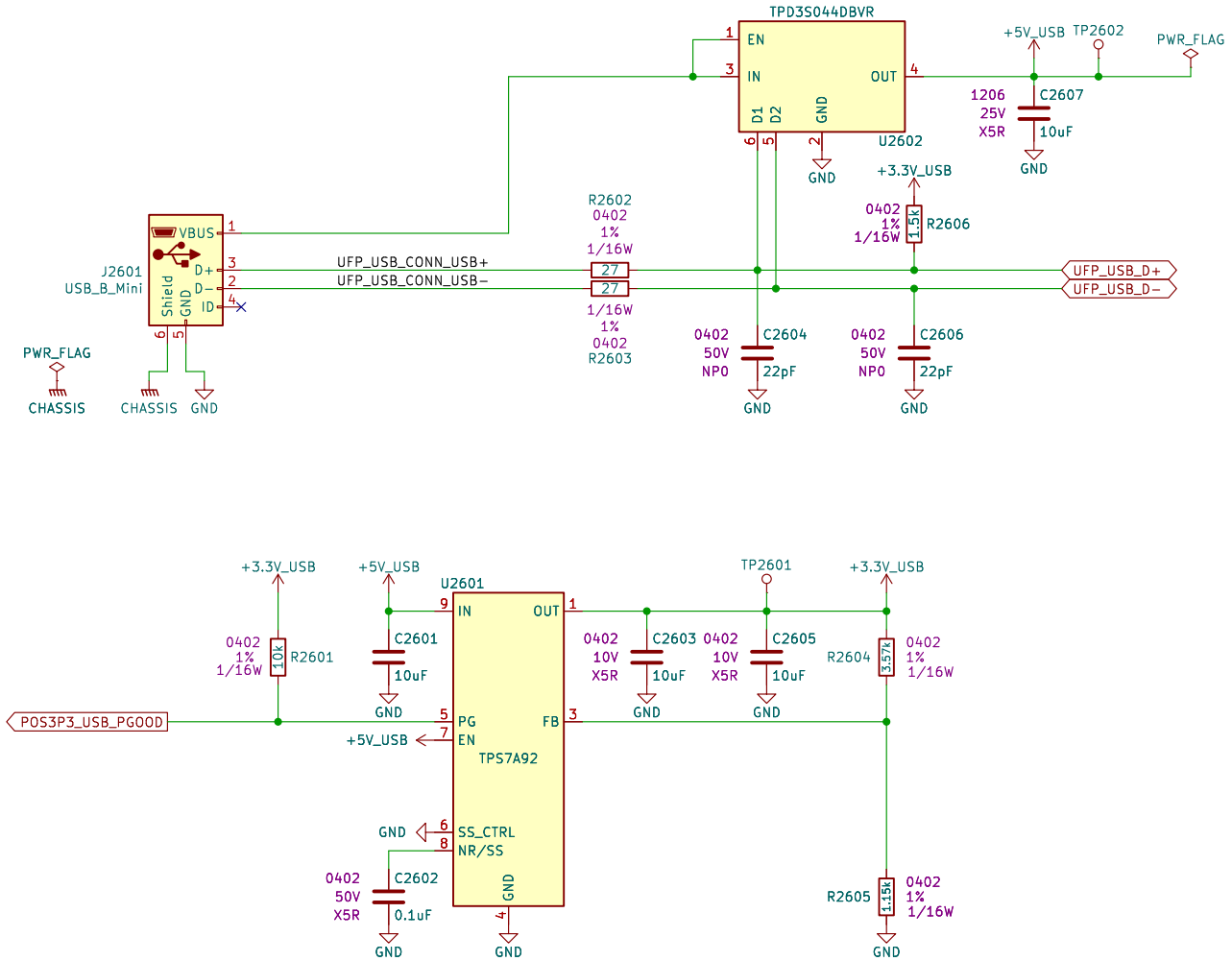

Drew Maatman and Michael Laffin

Sheet: /Upstream USB Port/
File: Upstream_USB_Port.kicad_sch

Title: Thermal Camera

Size: A	Date: 2024-09-20	**Rev: A**
KiCad E.D.A. 8.0.5		Id: 26/31

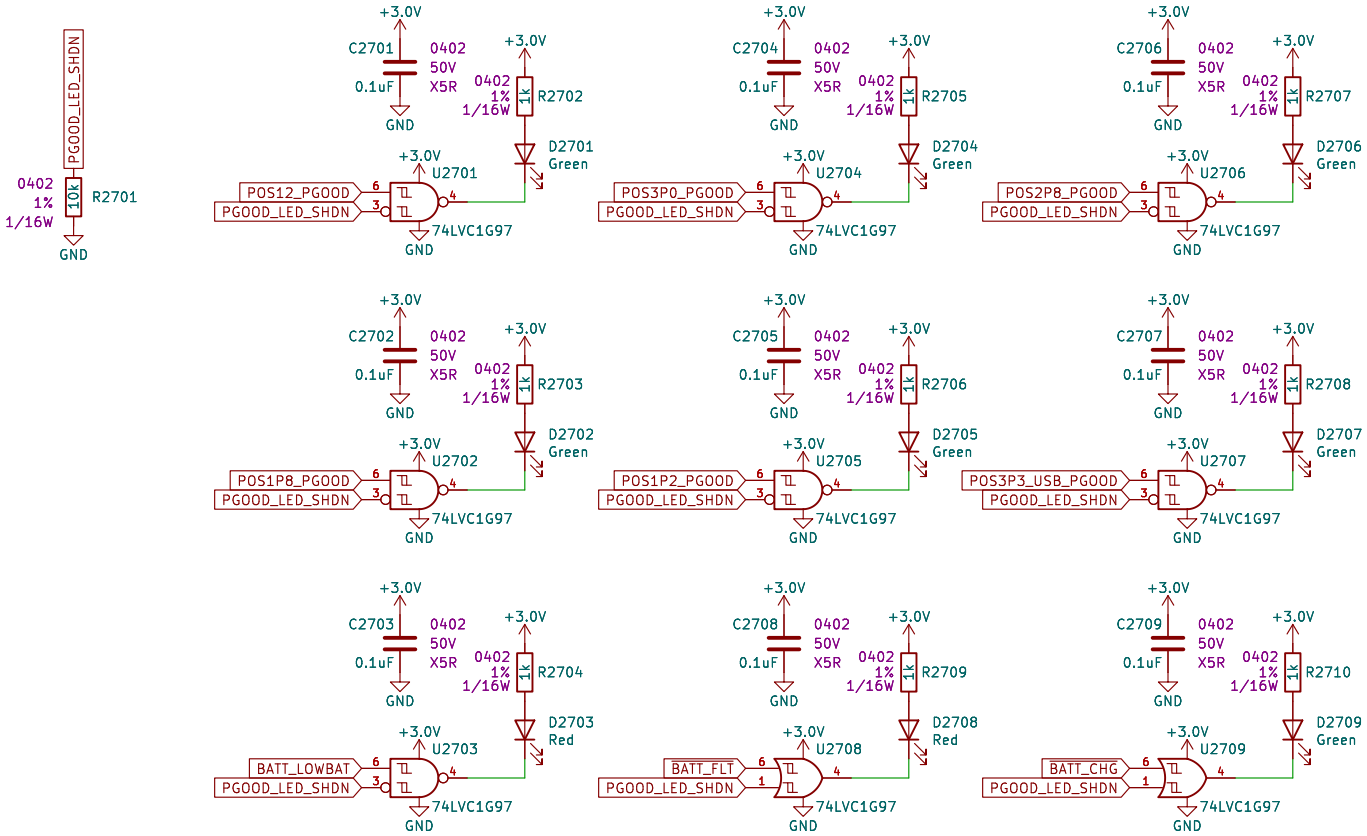

Drew Maatman and Michael Laffin

Sheet: /PGOOD LEDs/

File: PGOOD_LEDs.kicad_sch

Title: Thermal Camera

Size: A	Date: 2024-09-20	**Rev: A**
KiCad E.D.A. 8.0.5		Id: 27/31

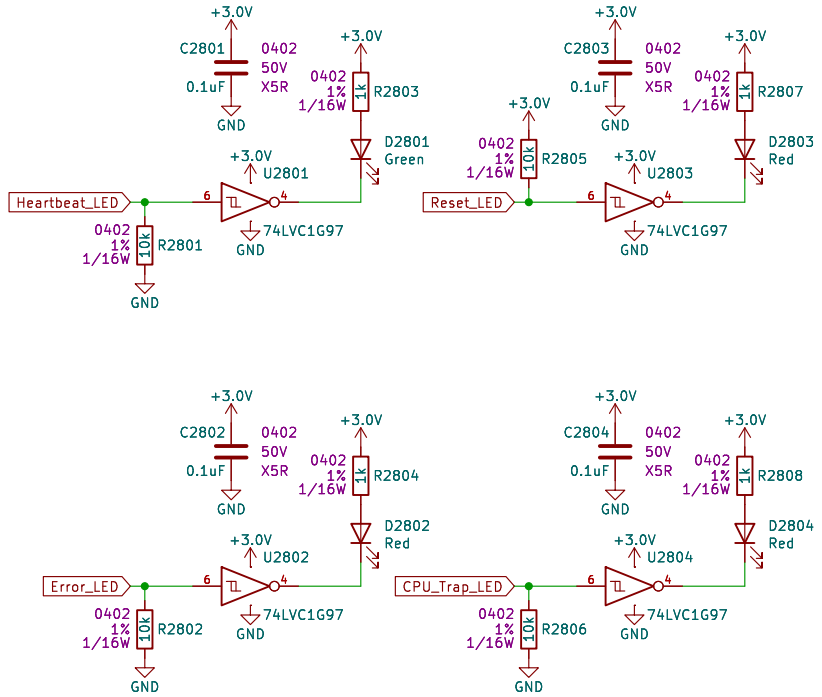

Drew Maatman and Michael Laffin

Sheet: /Status LEDs/
File: Status_LEDs.kicad_sch

Title: Thermal Camera

Size: A	Date: 2024-09-20	**Rev: A**
KiCad E.D.A. 8.0.5		Id: 28/31

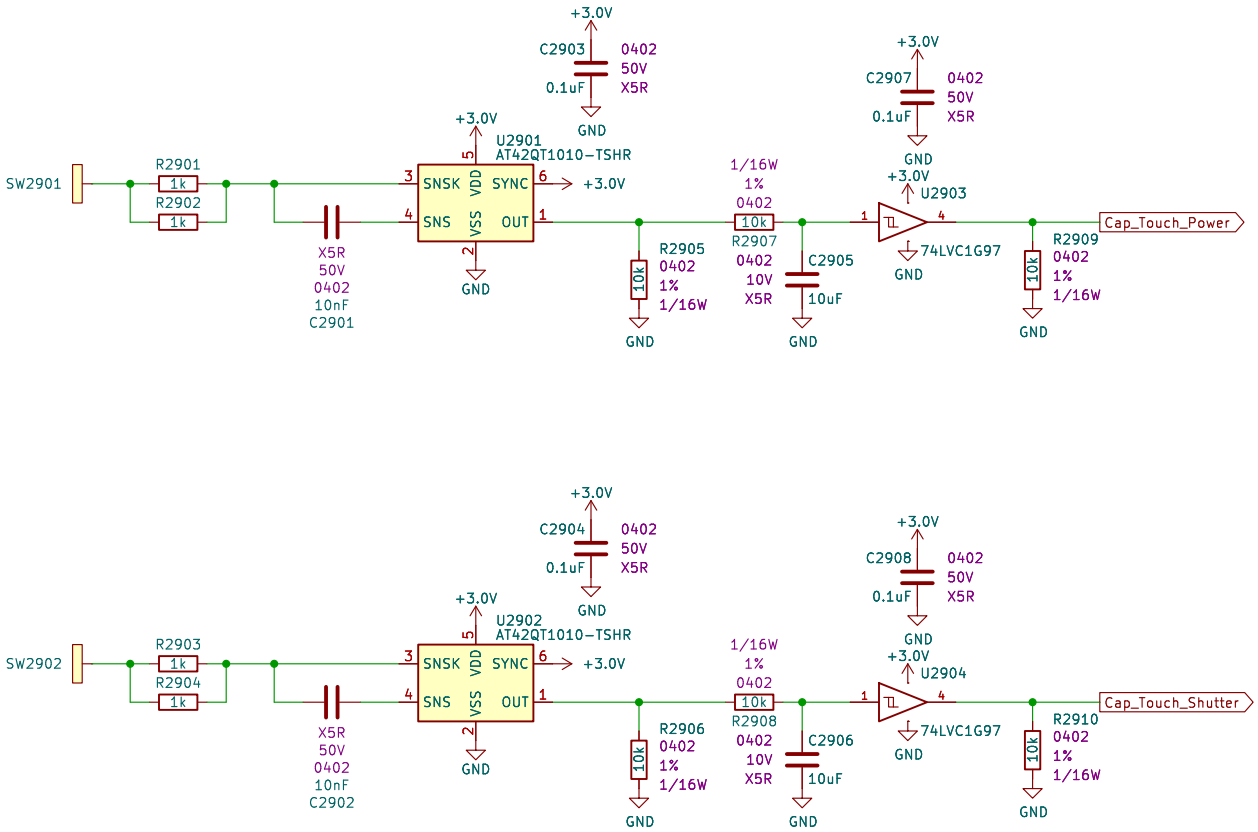

Drew Maatman and Michael Laffin

Sheet: /Capacitive Touch/
File: Capacitive_Touch.kicad_sch

Title: Thermal Camera

Size: A	Date: 2024-09-20	**Rev: A**
KiCad E.D.A. 8.0.5		Id: 29/31

Drew Maatman and Michael Laffin

Sheet: /Mechanical/
File: Mechanical.kicad_sch

Title: Thermal Camera

Size: A	Date: 2024-09-20	**Rev: A**
KiCad E.D.A. 8.0.5		Id: 30/31

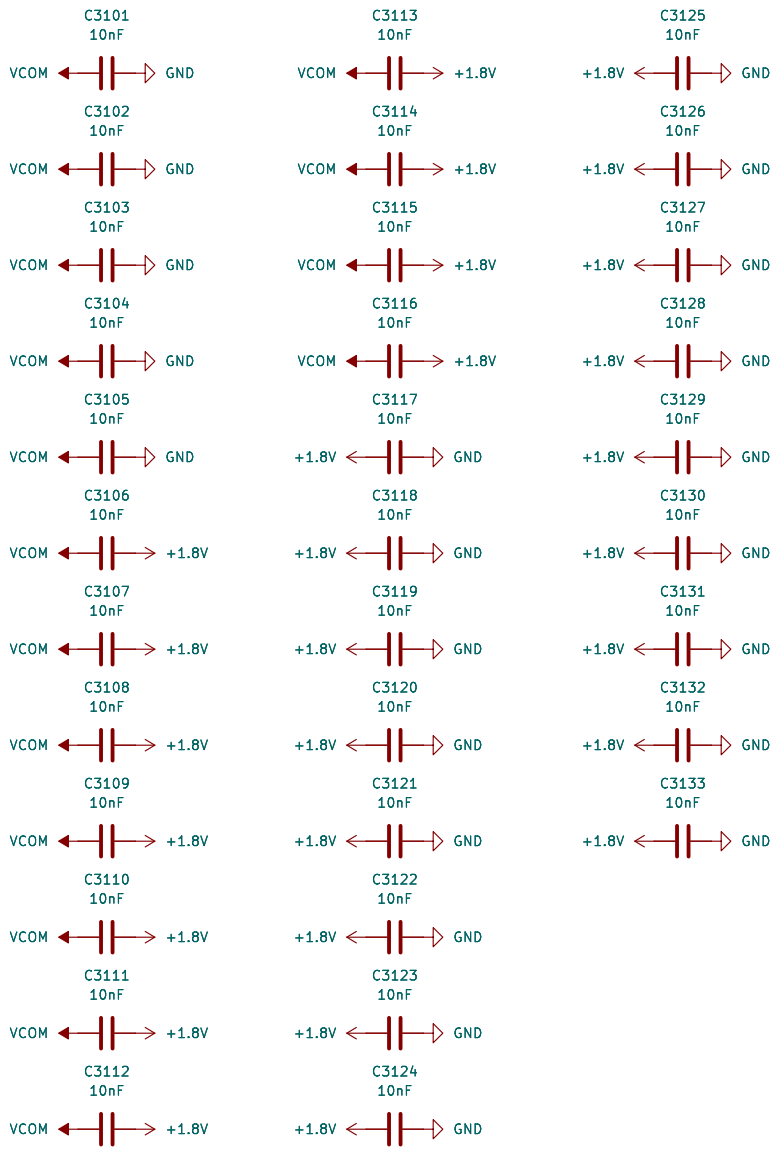

Drew Maatman and Michael Laffin

Sheet: /Stitching Caps/
File: stitching_caps.kicad_sch

Title: Thermal Camera

Size: A	Date: 2024-09-20	**Rev: A**
KiCad E.D.A. 8.0.5		Id: 31/31