Vacuum Fluorescent Display Clock

02. Power Input — PowerInput.sch
03. Microcontroller — Microcontroller.sch
04. +3.3V Power Supply — POS3P3V_Power_Supply.sch
05. VAN Power Supply — VAN_Power_Supply.sch
06. VFF Power Supply — VFF_Power_Supply.sch
07. USB/UART Converter — USB_UART_Converter.sch
08. PGOOD Indicators — PGOOD_Indicators.sch
09. UART Isolation — UART_Isolation.sch
10. Status Indicators — Status_Indicators.sch
11. Anode Drivers — AnodeDrivers.sch
12. Grid Drivers — GridDrivers.sch
13. Pushbuttons — Pushbuttons.sch
14. Analog Inputs — AnalogInputs.sch
15. Firmware Notes — FirmwareNotes.sch
16. Programming — Programming.sch
17. Backup Supply — BackupSupply.sch
18. Serial Number — SerialNumber.sch
19. Display — Display.sch
20. Ambient Light Sensor — Ambient_Light_Sensor.sch
21. Temperature Sensors — Temperature_Sensors.sch
22. Tube Life Timer — Tube_Life_Timer.sch
23. Mechanical — Mechanical.sch
24.
25.

Sheet: /		
File: VFD_Clock.sch		
Title:		
Size: A	Date:	**Rev:**
KiCad E.D.A. kicad (5.0.0-rc3-dev-11-geaf938c7e)		Id: 1/23

Input Overvoltage/Undervoltage/Reverse Polarity Lockout

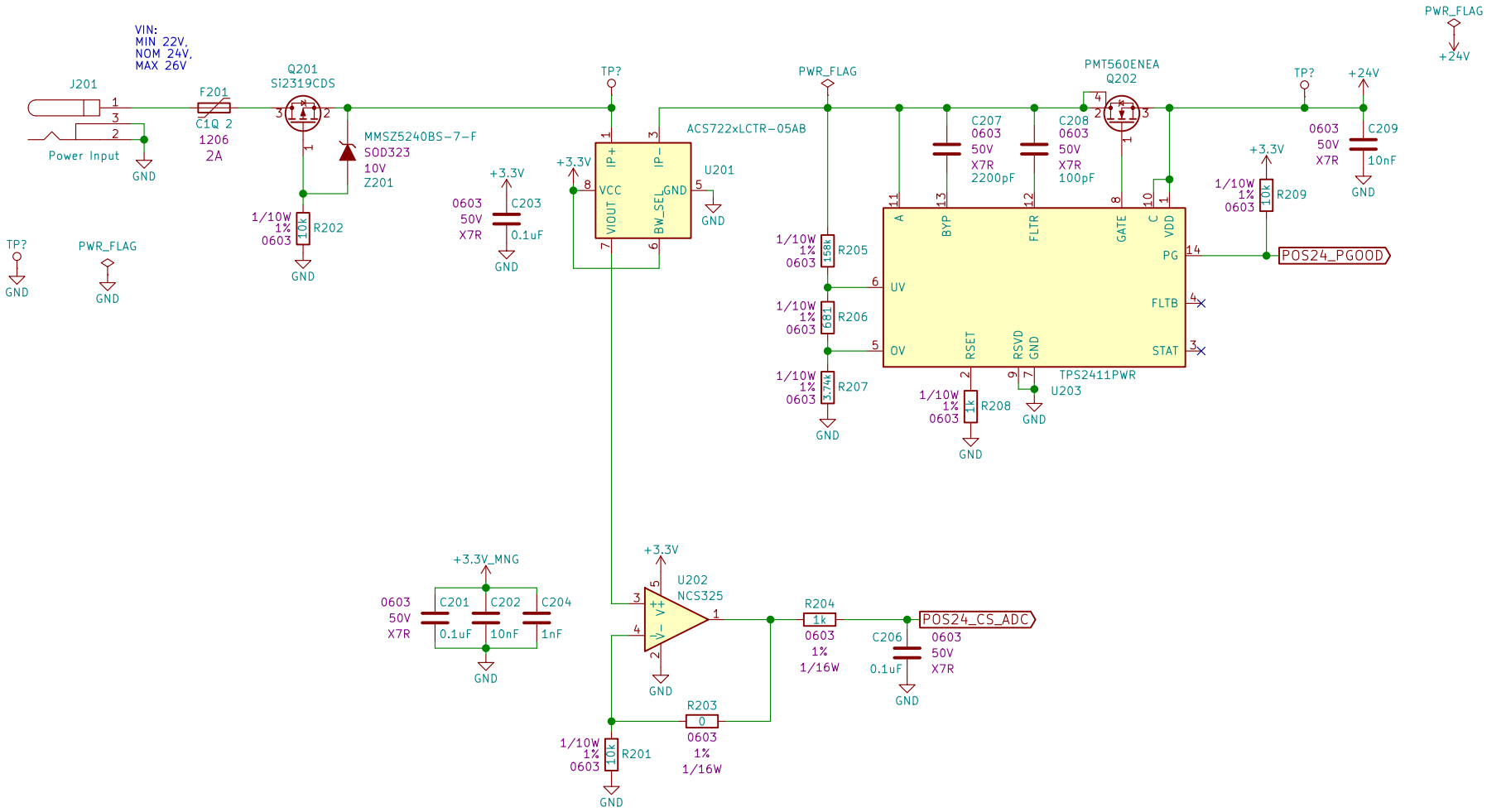

Drew Maatman		
Sheet: /Power Input/		
File: PowerInput.sch		
Title: Power Input		
Size: A	Date: 2017-03-06	**Rev: 2**
KiCad E.D.A. kicad (5.0.0-rc3-dev-11-geaf938c7e)		Id: 2/23

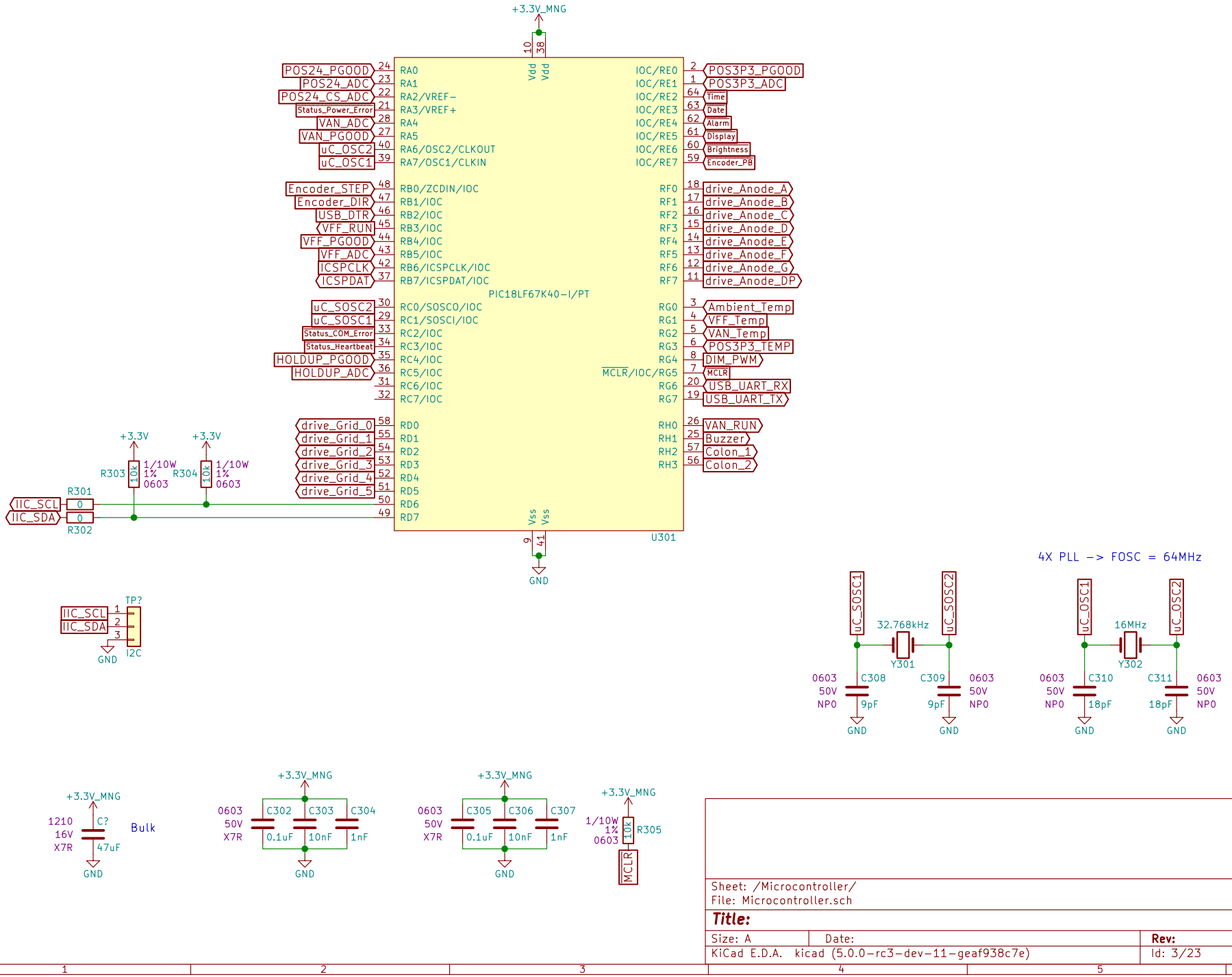
+3.3V_MNG
PIC18LF67K40-I/PT
U301
RA0
RA1
RA2/VREF-
RA3/VREF+
RA4
RA5
RA6/OSC2/CLKOUT
RA7/OSC1/CLKIN
RB0/ZCDIN/IOC
RB1/IOC
RB2/IOC
RB3/IOC
RB4/IOC
RB5/IOC
RB6/ICSPCLK/IOC
RB7/ICSPDAT/IOC
RC0/SOSCO/IOC
RC1/SOSCI/IOC
RC2/IOC
RC3/IOC
RC4/IOC
RC5/IOC
RC6/IOC
RC7/IOC
RD0
RD1
RD2
RD3
RD4
RD5
RD6
RD7
IOC/RE0
IOC/RE1
IOC/RE2
IOC/RE3
IOC/RE4
IOC/RE5
IOC/RE6
IOC/RE7
RF0
RF1
RF2
RF3
RF4
RF5
RF6
RF7
RG0
RG1
RG2
RG3
RG4
MCLR/IOC/RG5
RG6
RG7
RH0
RH1
RH2
RH3
Vdd
Vss
POS24_PGOOD
POS24_ADC
POS24_CS_ADC
Status_Power_Error
VAN_ADC
VAN_PGOOD
uC_OSC2
uC_OSC1
Encoder_STEP
Encoder_DIR
USB_DTR
VFF_RUN
VFF_PGOOD
VFF_ADC
ICSPCLK
ICSPDAT
uC_SOSC2
uC_SOSC1
Status_COM_Error
Status_Heartbeat
HOLDUP_PGOOD
HOLDUP_ADC
drive_Grid_0
drive_Grid_1
drive_Grid_2
drive_Grid_3
drive_Grid_4
drive_Grid_5
POS3P3_PGOOD
POS3P3_ADC
Time
Date
Alarm
Display
Brightness
Encoder_PB
drive_Anode_A
drive_Anode_B
drive_Anode_C
drive_Anode_D
drive_Anode_E
drive_Anode_F
drive_Anode_G
drive_Anode_DP
Ambient_Temp
VFF_Temp
VAN_Temp
POS3P3_TEMP
DIM_PWM
MCLR
USB_UART_RX
USB_UART_TX
VAN_RUN
Buzzer
Colon_1
Colon_2
GND
+3.3V
R303
R304
10k
1/10W
1%
0603
R301
R302
IIC_SCL
IIC_SDA
TP?
I2C
4X PLL -> FOSC = 64MHz
32.768kHz
Y301
16MHz
Y302
C308
C309
C310
C311
9pF
18pF
50V
NP0
Bulk
C?
1210
16V
X7R
47uF
C302
C303
C304
C305
C306
C307
0.1uF
10nF
1nF
R305
Sheet: /Microcontroller/
File: Microcontroller.sch
Title:
Size: A
Date:
Rev:
KiCad E.D.A. kicad (5.0.0-rc3-dev-11-geaf938c7e)
Id: 3/23

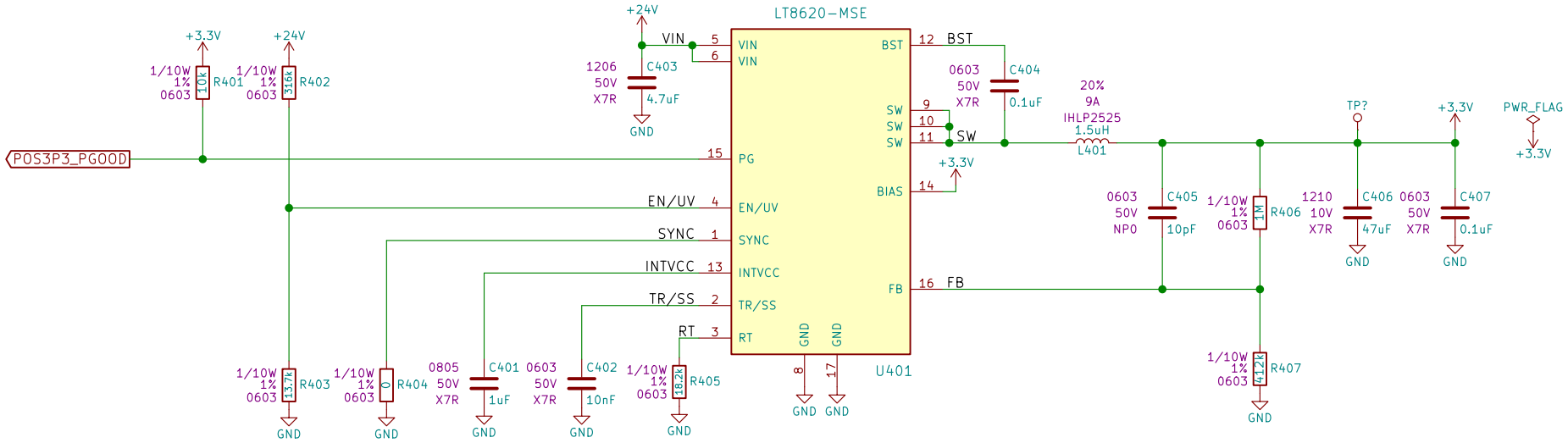

Sheet: /+3.3V Power Supply/		
File: POS3P3V_Power_Supply.sch		
Title:		
Size: A	Date:	**Rev:**
KiCad E.D.A. kicad (5.0.0-rc3-dev-11-geaf938c7e)		Id: 4/23

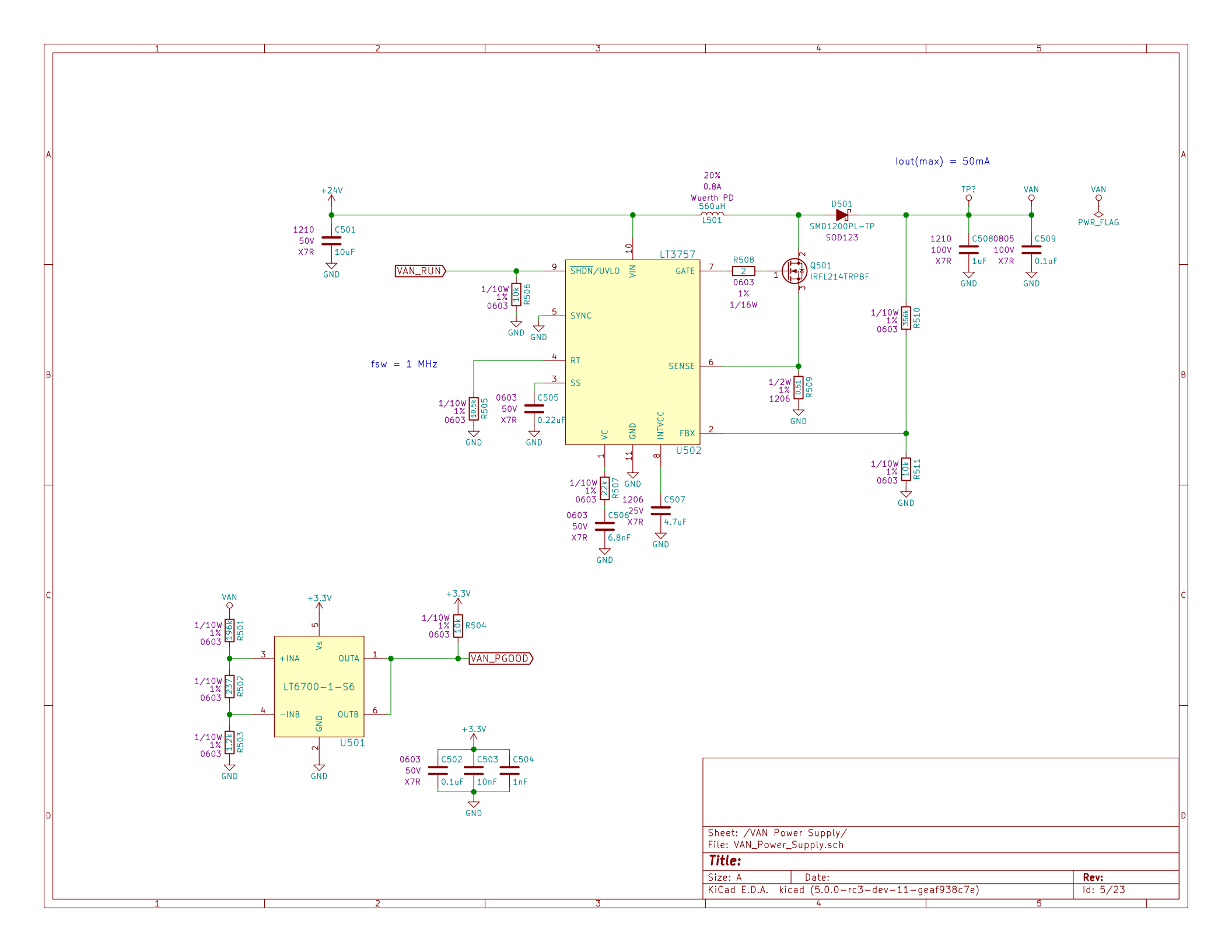
Iout(max) = 50mA
+24V
1210
50V
X7R
C501
10uF
GND
20%
0.8A
Wuerth PD
560uH
L501
D501
SMD1200PL-TP
SOD123
TP?
VAN
VAN
PWR_FLAG
1210
100V
X7R
C508
1uF
0805
100V
X7R
C509
0.1uF
GND
GND
VAN_RUN
LT3757
SHDN/UVLO
VIN
GATE
SYNC
RT
SS
SENSE
VC
GND
INTVCC
FBX
U502
1/10W
1%
0603
10K
R506
R508
2
0603
1%
1/16W
Q501
IRFL214TRPBF
1/10W
1%
0603
356K
R510
fsw = 1 MHz
1/10W
1%
0603
10.5K
R505
0603
50V
X7R
C505
0.22uF
1/2W
1%
1206
0.51
R509
1/10W
1%
0603
22K
R507
0603
50V
X7R
C506
6.8nF
1206
25V
X7R
C507
4.7uF
1/10W
1%
0603
10K
R511
VAN
+3.3V
+3.3V
1/10W
1%
0603
196K
R501
1/10W
1%
0603
237
R502
1/10W
1%
0603
1.2K
R503
+INA
-INB
Vs
OUTA
OUTB
GND
LT6700-1-S6
U501
1/10W
1%
0603
10K
R504
VAN_PGOOD
+3.3V
0603
50V
X7R
C502
0.1uF
C503
10nF
C504
1nF
GND
Sheet: /VAN Power Supply/
File: VAN_Power_Supply.sch
Title:
Size: A
Date:
Rev:
KiCad E.D.A. kicad (5.0.0-rc3-dev-11-geaf938c7e)
Id: 5/23

+1.2V Filament Voltage Power Supply

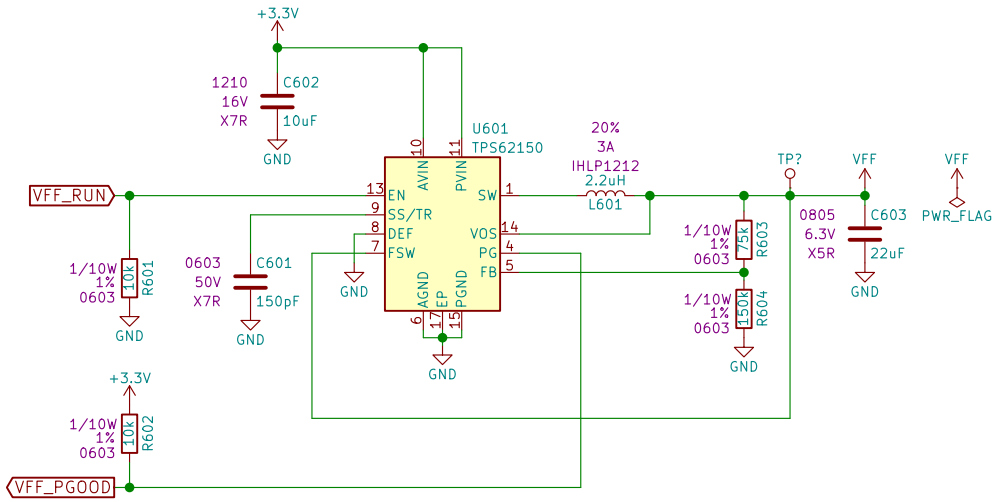

Sheet: /VFF Power Supply/		
File: VFF_Power_Supply.sch		
Title:		
Size: A	Date:	**Rev:**
KiCad E.D.A. kicad (5.0.0-rc3-dev-11-geaf938c7e)		Id: 6/23

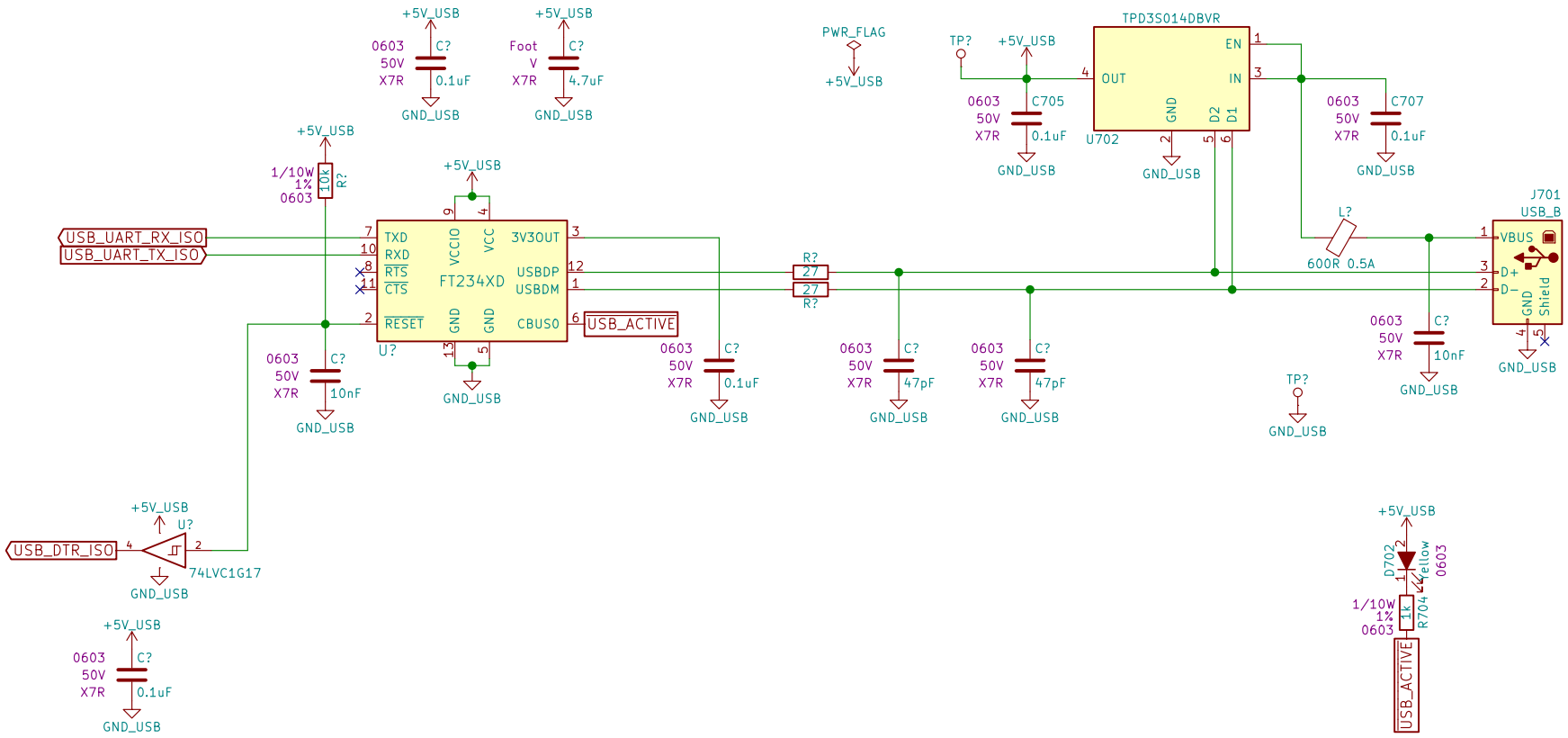

Sheet: /USB/UART Converter/		
File: USB_UART_Converter.sch		
Title:		
Size: A	Date:	**Rev:**
KiCad E.D.A. kicad (5.0.0-rc3-dev-11-geaf938c7e)		Id: 7/23

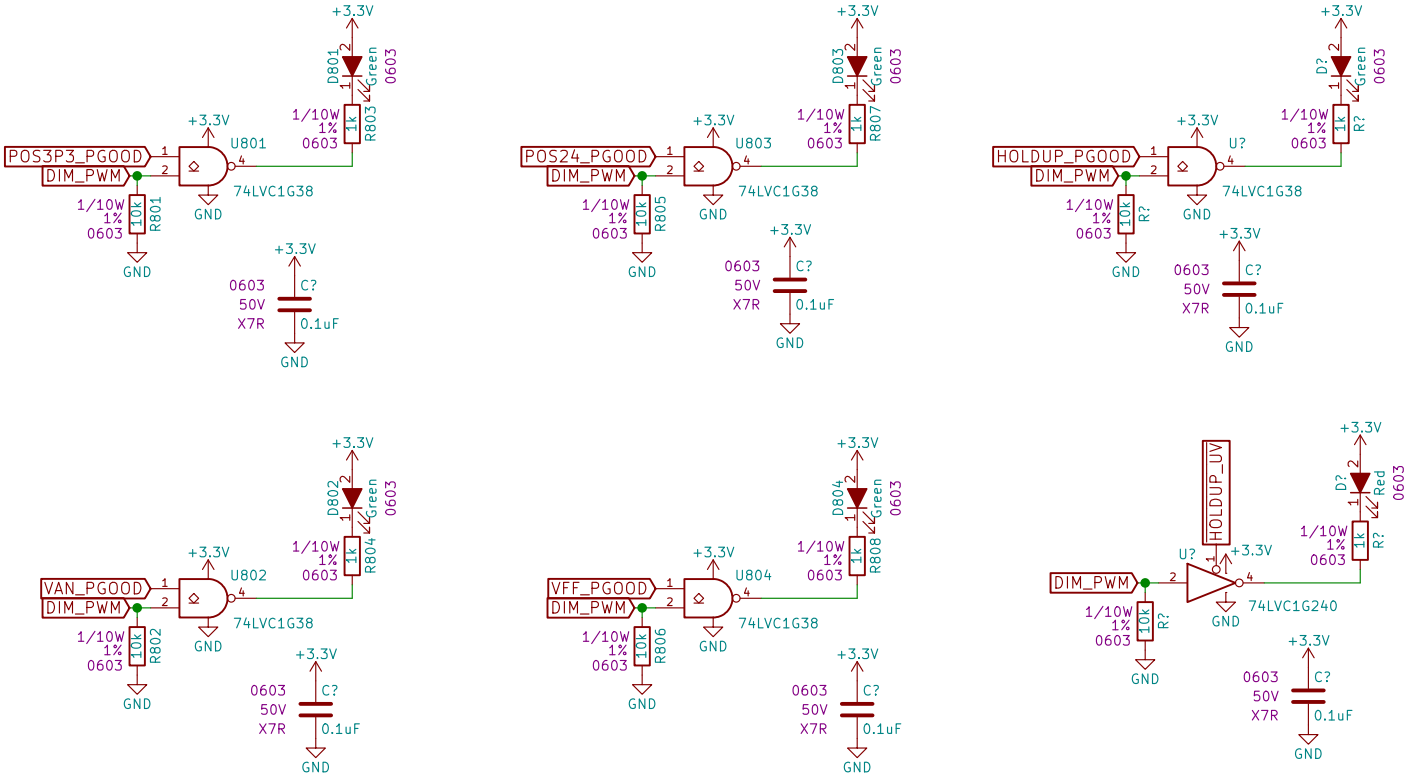

Sheet: /PGOOD Indicators/		
File: PGOOD_Indicators.sch		
Title:		
Size: A	Date:	**Rev:**
KiCad E.D.A. kicad (5.0.0-rc3-dev-11-geaf938c7e)		Id: 8/23

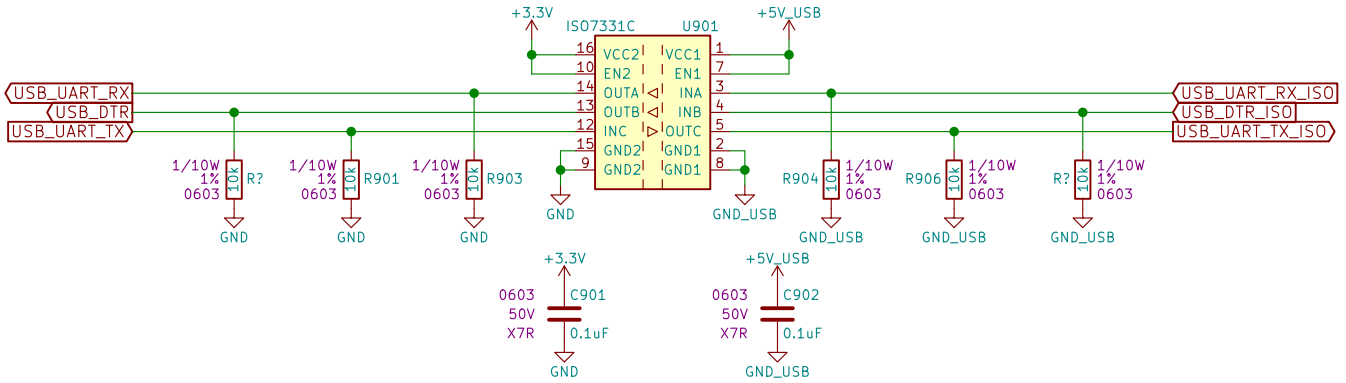

Sheet: /UART Isolation/		
File: UART_Isolation.sch		
Title:		
Size: A	Date:	**Rev:**
KiCad E.D.A. kicad (5.0.0-rc3-dev-11-geaf938c7e)		Id: 9/23

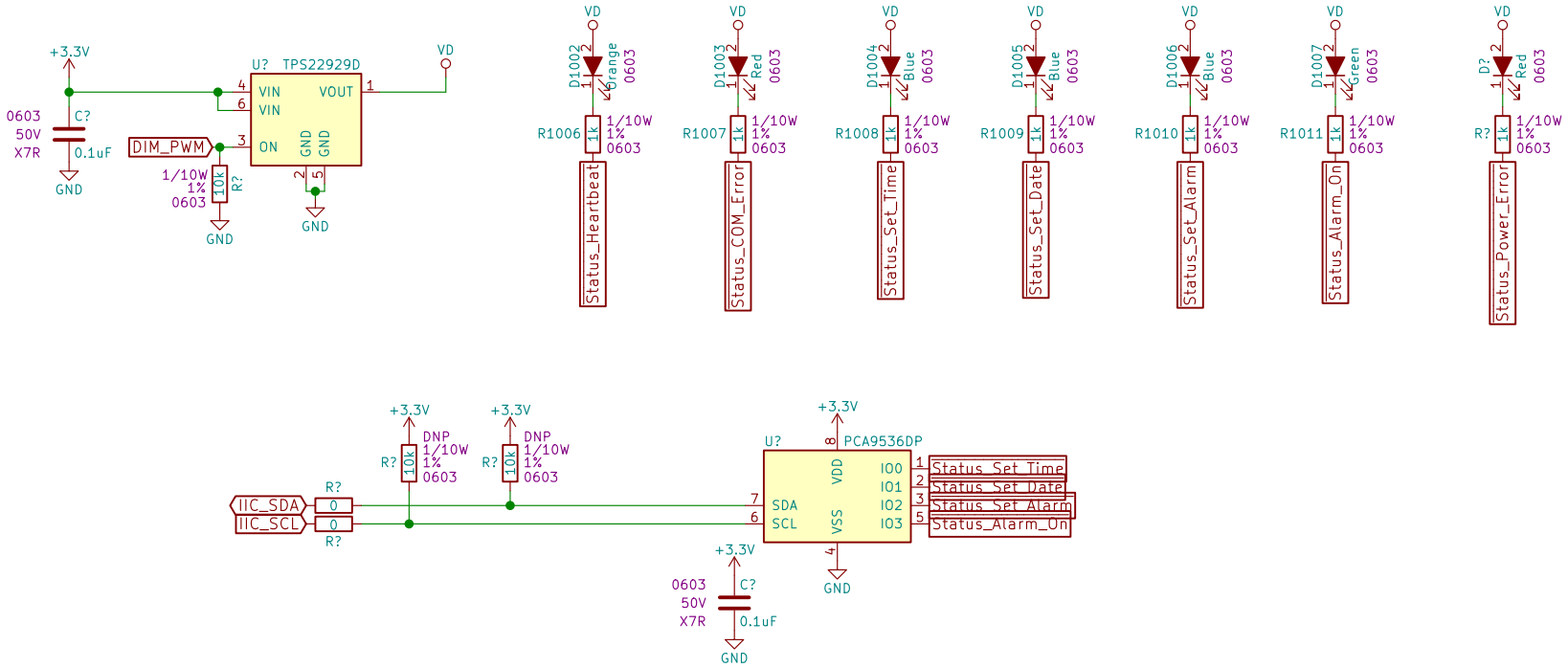

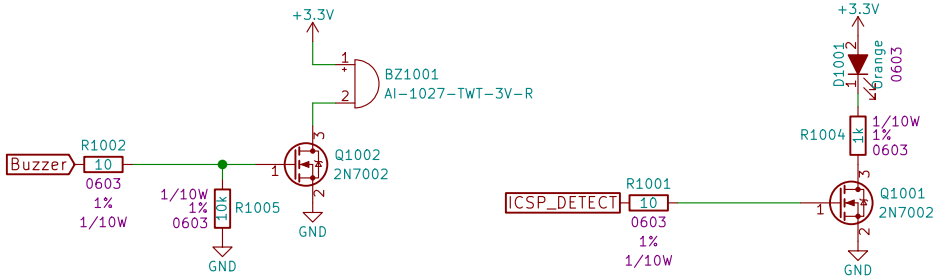

Sheet: /Status Indicators/		
File: Status_Indicators.sch		
Title:		
Size: A	Date:	**Rev:**
KiCad E.D.A. kicad (5.0.0-rc3-dev-11-geaf938c7e)		Id: 10/23

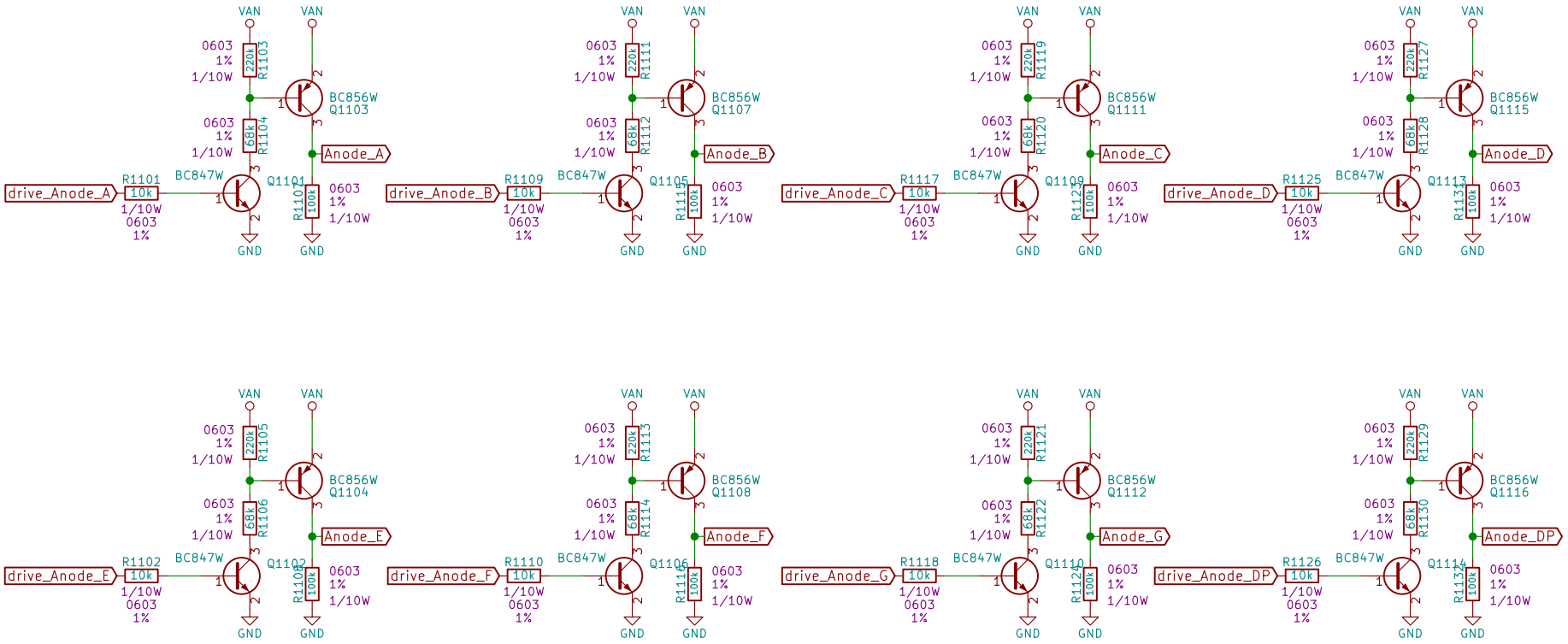

Sheet: /Anode Drivers/ File: AnodeDrivers.sch		
Title:		
Size: A	Date:	**Rev:**
KiCad E.D.A. kicad (5.0.0-rc3-dev-11-geaf938c7e)		Id: 11/23

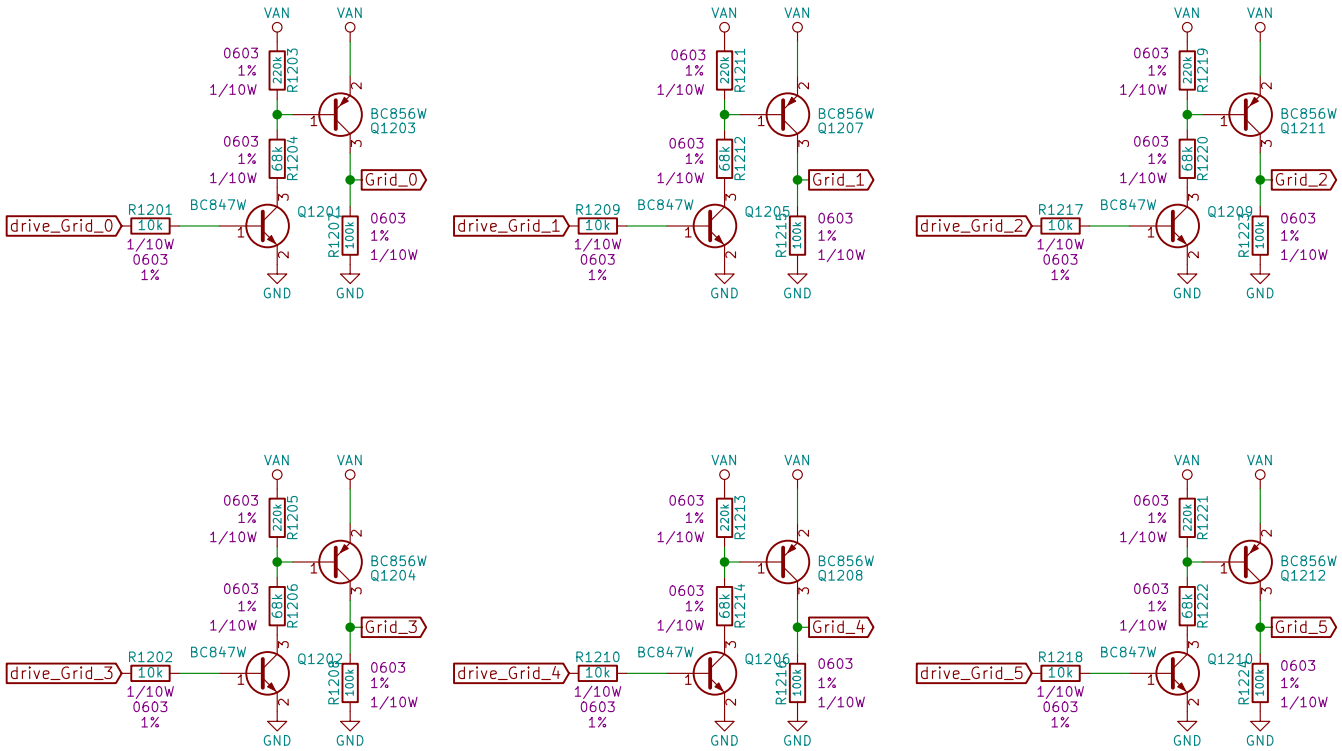

Sheet: /Grid Drivers/ File: GridDrivers.sch		
Title:		
Size: A	Date:	**Rev:**
KiCad E.D.A. kicad (5.0.0-rc3-dev-11-geaf938c7e)		Id: 12/23

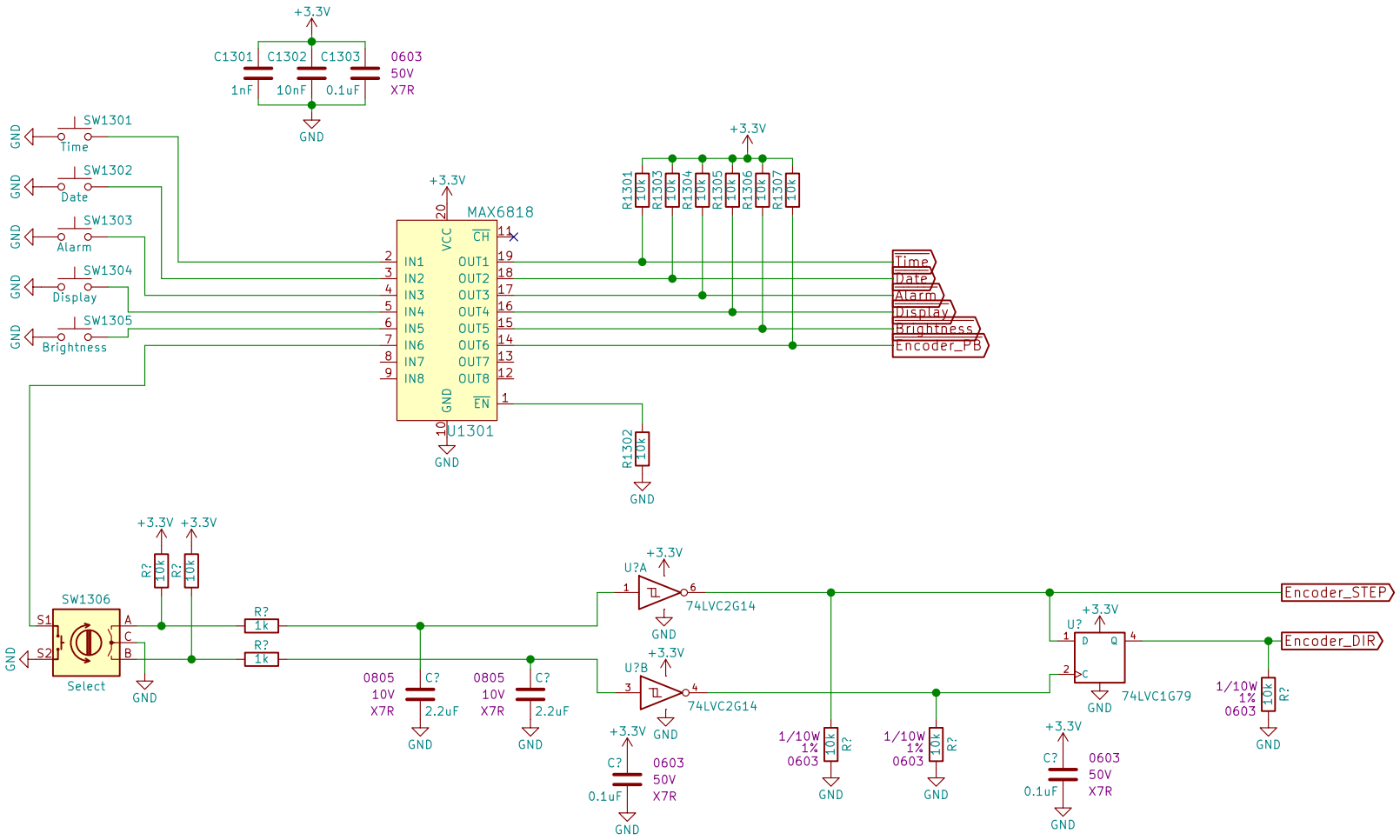

Sheet: /Pushbuttons/		
File: Pushbuttons.sch		
Title:		
Size: A	Date:	**Rev:**
KiCad E.D.A. kicad (5.0.0-rc3-dev-11-geaf938c7e)		Id: 13/23

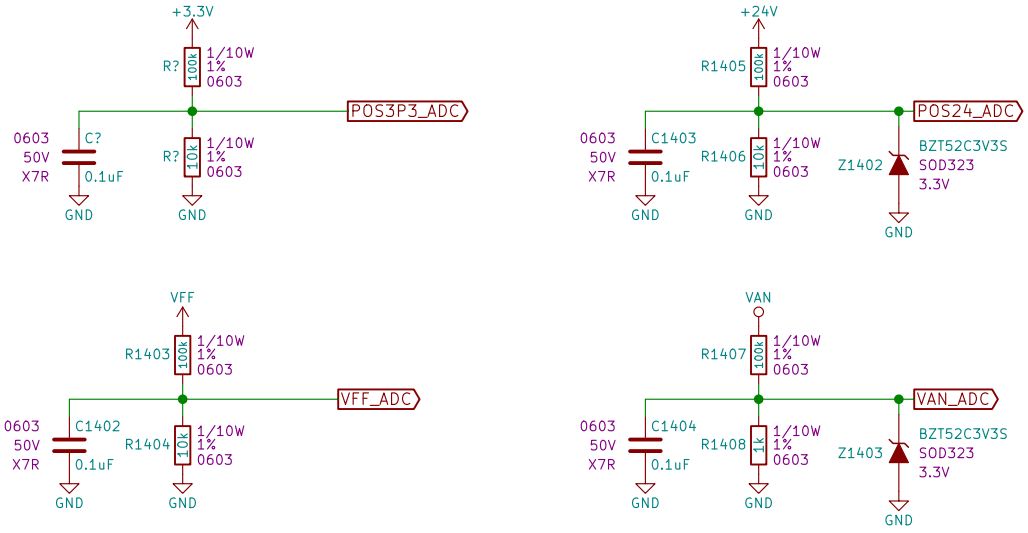

Sheet: /Analog Inputs/ File: AnalogInputs.sch		
Title:		
Size: A	Date:	**Rev:**
KiCad E.D.A. kicad (5.0.0-rc3-dev-11-geaf938c7e)		Id: 14/23

* All of PORTC should be configured as open drain outputs for sinking current from LEDs
* All of PORTA is used for ADC measurments/external oscillator
* Most of PORTD is used for driving grid switches, can be set up as a 6 bit structure located at the PORTC memory address
* All of PORTF is used for driving anode switches, so smae thing as above with 8 bits
* All of PORTE is used for measuring pushbuttons so all should be set as inputs with IOC's enabled
* Same with PORTB except with only 6 bits, and used for generic input logic signals
* RD0 and RD1 should be routed to SMT1 and SMT2 so that the signal measurement timers can be used to measure dipslay update rate and refresh rate
* RG3 should be configured as an output for a CCPx module to produce a PWM signal for dimming LEDs on the board. Display itself will be dimmed in software by adjusting the on time
* EUSART5 must be used for USB serial communication since only this module can be routed to PORTG
* RG0 and RG1 will be the inputs to CCPx modules to measure the switching frequency (maybe duty cycle as well) of VFF and VAN supplies
* RG4 should be set/cleared every other display refresh cycle, and the input snese ciruit queued when cleared, so that energy/charge per display cycle can be measured
* While operating, the external 16MHz clock with internal 4x PLL will yield an FOSC of 64MHz. While the display is off, FOSC should be switched to something slower internally to minimize power consumption

Sheet: /Firmware Notes/ File: FirmwareNotes.sch		
Title:		
Size: A	Date:	**Rev:**
KiCad E.D.A. kicad (5.0.0-rc3-dev-11-geaf938c7e)		Id: 15/23

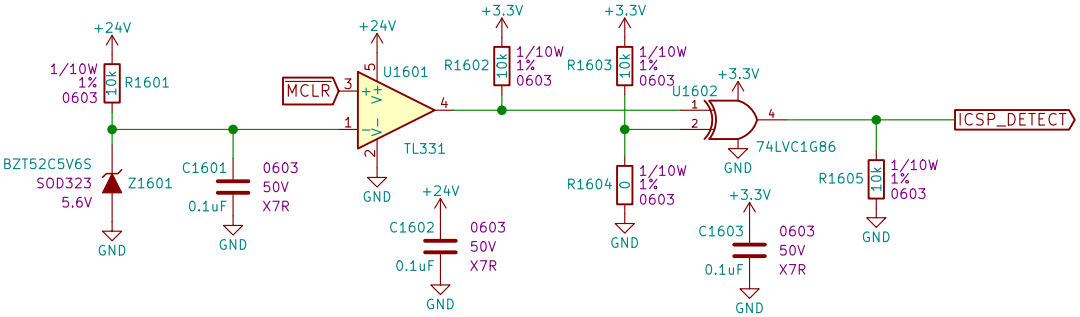

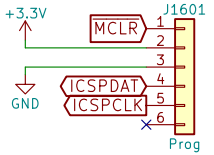

Sheet: /Programming/ File: Programming.sch		
Title:		
Size: A	Date:	**Rev:**
KiCad E.D.A. kicad (5.0.0-rc3-dev-11-geaf938c7e)		Id: 16/23

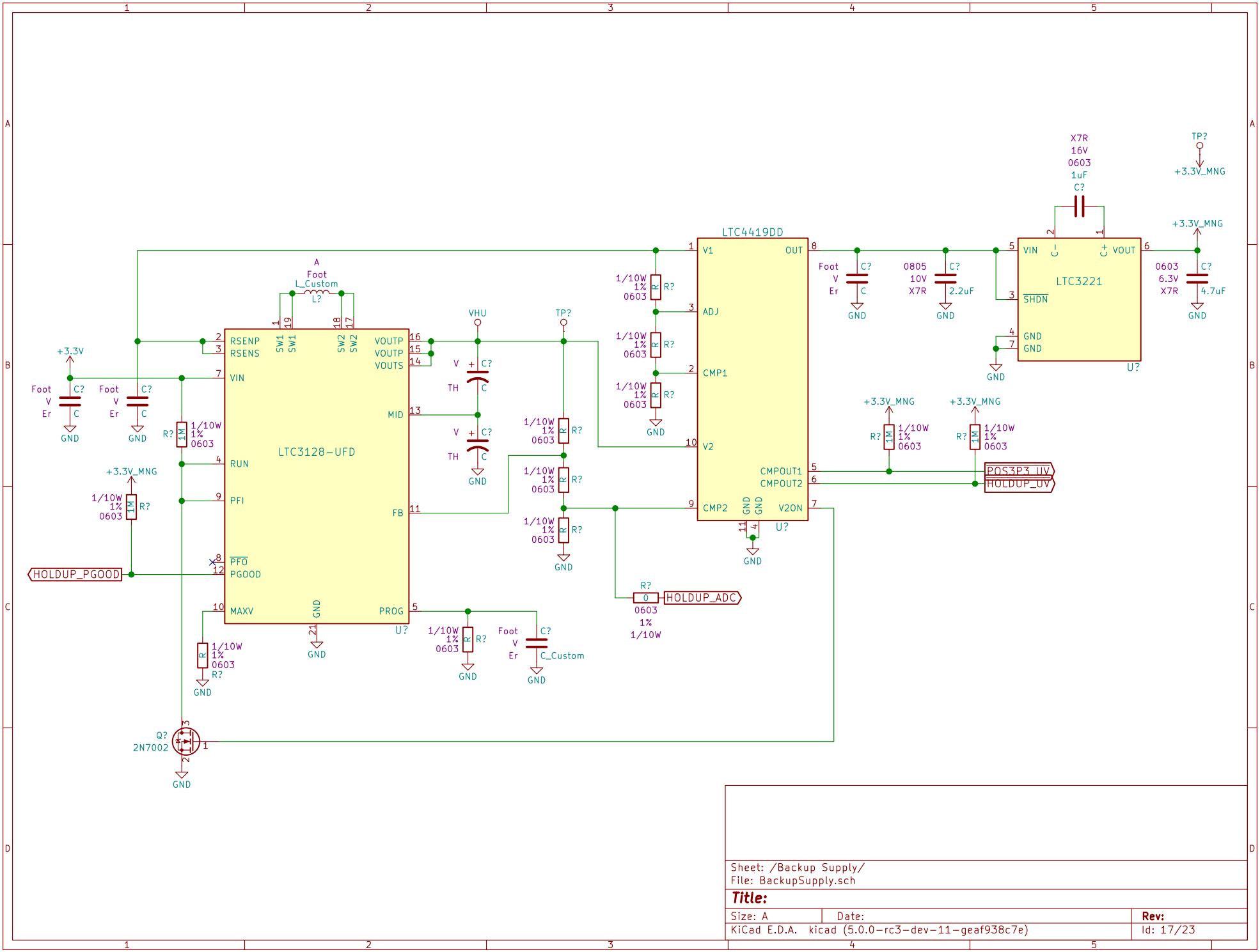

Sheet: /Backup Supply/
File: BackupSupply.sch

Title:

Size: A	Date:	Rev:
KiCad E.D.A. kicad (5.0.0-rc3-dev-11-geaf938c7e)		Id: 17/23

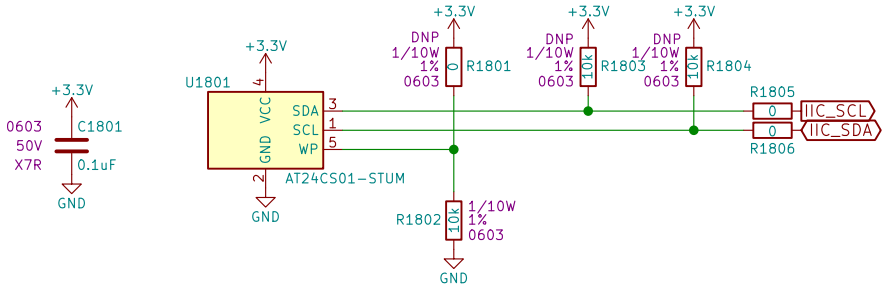

Sheet: /Serial Number/		
File: SerialNumber.sch		
Title:		
Size: A	Date:	**Rev:**
KiCad E.D.A. kicad (5.0.0-rc3-dev-11-geaf938c7e)		Id: 18/23

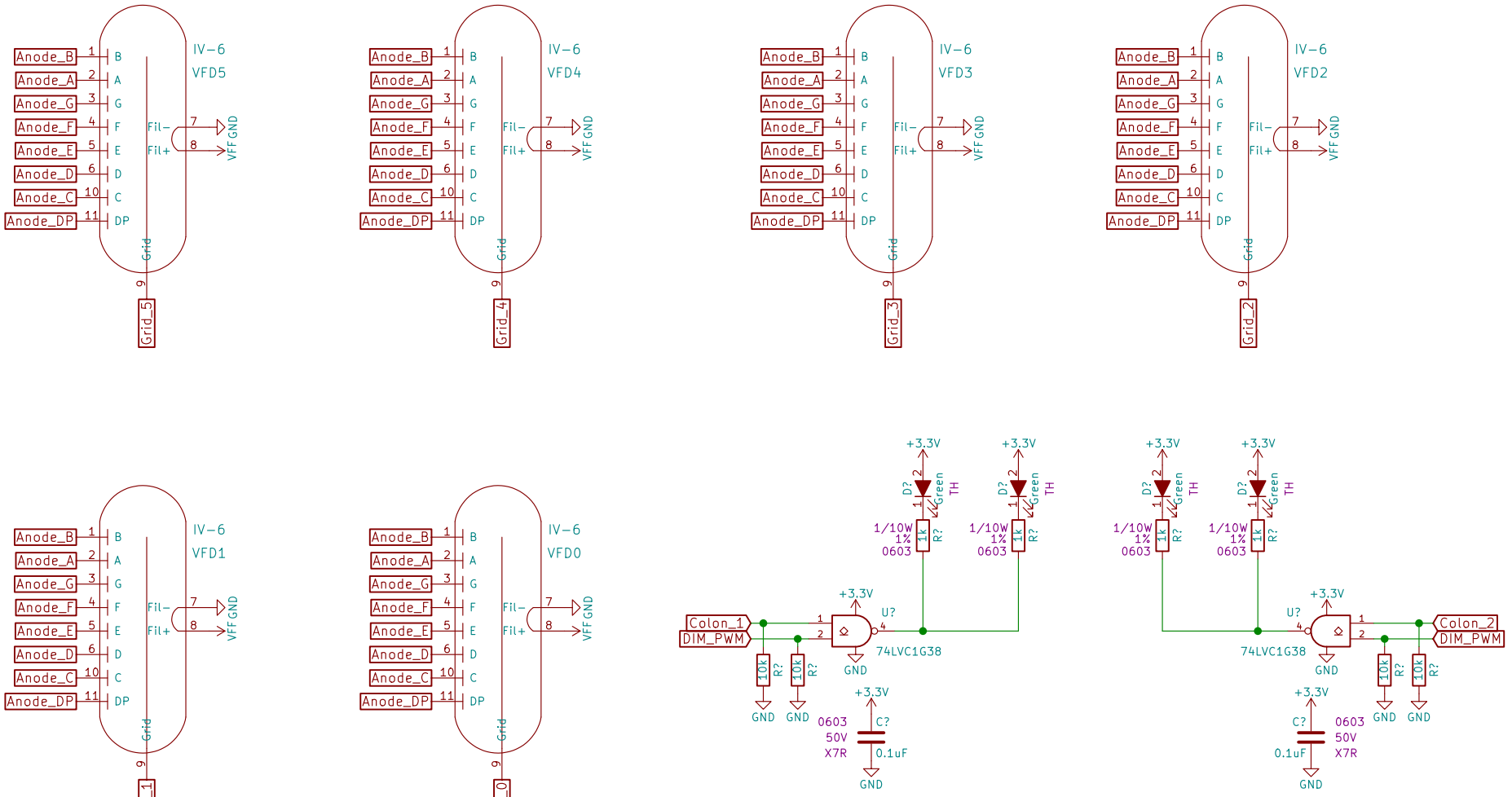

Sheet: /Display/		
File: Display.sch		
Title:		
Size: A	Date:	**Rev:**
KiCad E.D.A. kicad (5.0.0-rc3-dev-11-geaf938c7e)		Id: 19/23

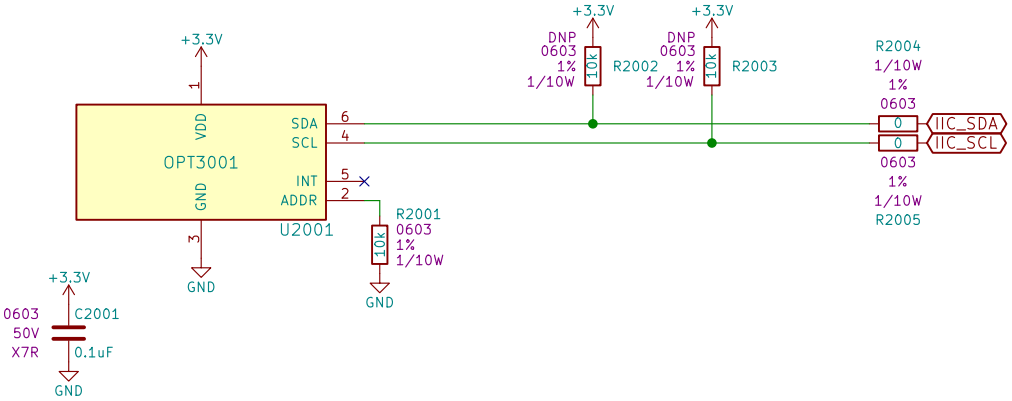

Sheet: /Ambient Light Sensor/ File: Ambient_Light_Sensor.sch		
Title:		
Size: A	Date:	**Rev:**
KiCad E.D.A. kicad (5.0.0-rc3-dev-11-geaf938c7e)		Id: 20/23

Place away from heating components

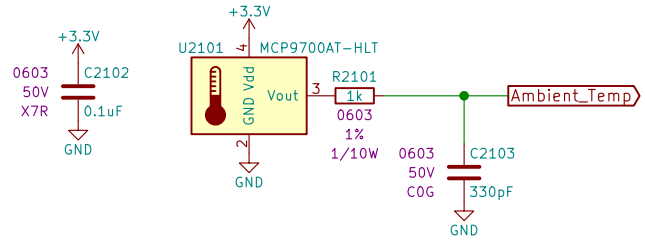

Place near POS3P3 power supply

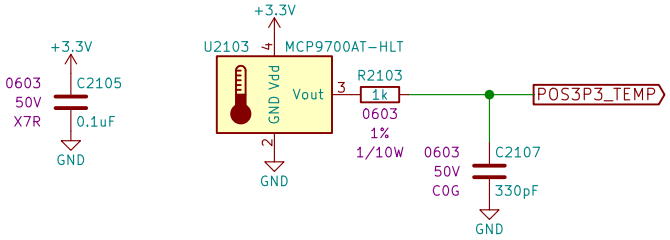

Place near VFF power supply

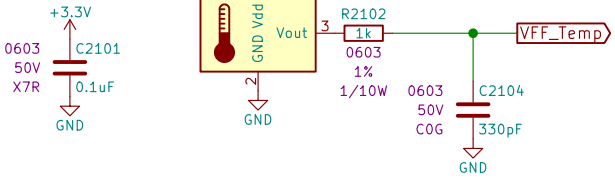

Place near VAN power supply

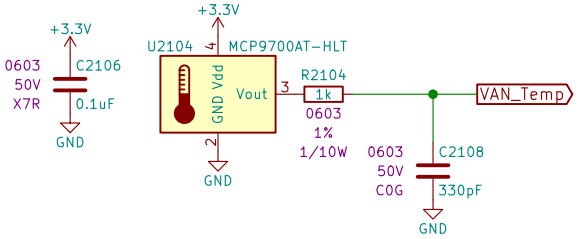

Sheet: /Temperature Sensors/ File: Temperature_Sensors.sch		
Title:		
Size: A	Date:	**Rev:**
KiCad E.D.A. kicad (5.0.0-rc3-dev-11-geaf938c7e)		Id: 21/23

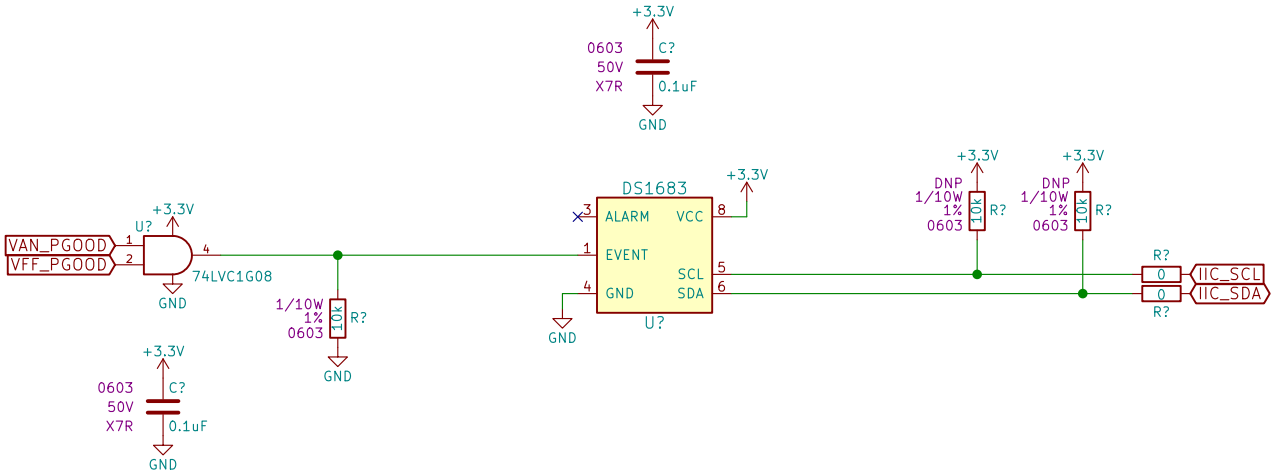

Sheet: /Tube Life Timer/ File: Tube_Life_Timer.sch		
Title:		
Size: A	Date:	**Rev:**
KiCad E.D.A. kicad (5.0.0-rc3-dev-11-geaf938c7e)		Id: 22/23

MH?
4-40 Mounting Hole

MH?
4-40 Mounting Hole

MH?
4-40 Mounting Hole

MH?
4-40 Mounting Hole

FID?

FID?

FID?

MH?
4-40 Mounting Hole

MH?
4-40 Mounting Hole

MH?
4-40 Mounting Hole

MH?
4-40 Mounting Hole

Symbols

ESD

OSHW

KiCAD

Polarity

High Voltage

MK?
#4-40 Screw

MK?
#4-40 Screw

MK?
#4-40 Screw

MK?
#4-40 Screw

MK?
#4-40 Standoff

MK?
#4-40 Standoff

MK?
#4-40 Standoff

MK?
#4-40 Standoff

MK?
#4-40 Screw

MK?
#4-40 Screw

MK?
#4-40 Screw

MK?
#4-40 Screw

MK?
#4-40 Standoff

MK?
#4-40 Standoff

MK?
#4-40 Standoff

MK?
#4-40 Standoff

Sheet: /Mechanical/
File: Mechanical.sch

Title:

Size: A	Date:	**Rev:**
KiCad E.D.A. kicad (5.0.0-rc3-dev-11-geaf938c7e)		Id: 23/23